IN THE UNITED STATES DISTRICT COURT
FOR THE EASTERN DISTRICT OF TEXAS
MARSHALL DIVISION

THETA IP, LLC, Plaintiff, v. SAMSUNG ELECTRONICS CO., LTD., and SAMSUNG ELECTRONICS AMERICA, LLC, Defendants.	C.A. No. 2:16-cv-00527-JRG-RSP **JURY TRIAL DEMANDED**

PLAINTIFF THETA IP, LLC'S
OPENING CLAIM CONSTRUCTION BRIEF

Petitioners Lenovo (United States) Inc. and Motorola Mobility LLC - Ex. 1013

TABLE OF CONTENTS

I. BACKGROUND OF THE ’330 AND ’728 PATENTS 1

II. LEGAL STANDARDS 3

III. PROPOSED CONSTRUCTIONS 4

- A. ’330 Patent: “dynamically adjust[ed]” 5
- B. ’330 Patent: “impedance” 7
- C. ’728 Patent: “a component in the receiver signal path” 10
- D. ’728 Patent: “scaling . . . impedance” 12
- E. ’728 Patent: “interfering signals” 15
- F. ’728 Patent: “interferer signal” 19
- G. ’728 Patent: “substantially the desired signal with the interferer signal reduced by filtering from the input signal” 20
- H. ’728 Patent: “variably changing . . . impedance” 23
- I. ’728 Patent: “at least a component in the receiver path” 27

IV. CONCLUSION 30

TABLE OF AUTHORITIES

Cases

Abraxis Bioscience, Inc. v. Maybe Pharm. (USA), Inc.,
467 F.3d 1370 (Fed. Cir. 2006) 4

Aventis Pharm. S.A. v. Hospira, Inc.,
675 F.3d 1324 (Fed. Cir. 2012) 3

Dealertrack, Inc. v. Huber,
674 F.3d 1315 (Fed. Cir. 2012) 4

Dow Chem. Co. v. Sumitomo Chem. Co., Ltd.,
257 F.3d 1364 (Fed. Cir. 2005) 3

Energizer Holdings, Inc. v. Int'l Trade Comm'n,
435 F.3d 1366 (Fed. Cir. 2006) 23, 28

Laryngeal Mask Co. Ltd. v. Ambu,
618 F.3d 1367 (Fed. Cir. 2010) 3

Linear Tech. Corp. v. Int'l Trade Comm'n,
566 F.3d 1049 (Fed. Cir. 2009) 4

Phillips v. AWH Corp.,
415 F.3d 1303 (Fed. Cir. 2005) (en banc) 3

Teva Pharmaceuticals USA, Inc. v. Sandoz, Inc.,
723 F.3d 1363 (Fed. Cir. 2013) 23, 28

Thorner v. Sony Computer Entm't Am. L.L.C.,
669 F.3d 1362 (Fed. Cir. 2012) 3, 4, 5

Toshiba Corp. v. Imation Corp.,
681 F.3d 1358 (Fed. Cir. 2012) 4

Wellman, Inc. v. Eastman Chem. Co.,
642 F.3d 1355 (Fed. Cir. 2011) 23, 28

Pursuant to the Court's Amended Docket Control Order on March 23, 2017 (D.I. 55), Plaintiff Theta IP, LLC ("Theta") hereby submits its Opening Claim Construction Brief.

I. BACKGROUND OF THE '330 AND '728 PATENTS

The two patents-in-suit in this litigation are U.S. Patent No. 7,010,330 ("the '330 patent") (attached as Exhibit A) and U.S. Patent No. 9,331,728 ("the '728 patent") (attached as Exhibit B). The '330 patent, titled "Power Dissipation Reduction in Wireless Transceivers," issued on March 7, 2006. The '330 patent issued from U.S. Patent Application No. 10/784,613 ("the '613 application"). The '613 application was filed on February 23, 2004, and claims priority to two provisional applications, No. 60/451,229 ("the '229 application") and No. 60/451,230 ("the '230 application"), both filed on March 1, 2003.

The '728 patent, also titled "Power Dissipation Reduction in Wireless Transceivers," issued on May 3, 2016. The '728 patent issued from U.S. Patent Application No. 11/318,646 ("the '646 application). The '646 application was filed on December 27, 2005 and is a continuation of the '613 application.

Both the '330 patent and the '728 patent are directed to reducing power dissipation in wireless transceivers. Wireless transceivers are found in many portable computing devices, including most smartphones and other handheld computers with Internet connectivity. ('330 patent, col. 1, ll. 19-21; '728 patent, col. 1, ll. 21-23). Such portable devices depend largely on battery power; thus, the less power consumed by the device's components, the more useful the device can be. ('330 patent, col. 1, ll. 26-30; '728 patent, col. 1, ll. 28-32).

As the '330 and '728 patent specifications explain, wireless transceivers are typically designed to operate under worst-case operating conditions – that is, when the desired signal reception strength is low and interfering signals are present. ('330 patent, col. 1, ll. 31-37; '728 patent, col. 1, ll. 33-39). However, because wireless transceivers do not always operate under

such worst-case conditions, the currents in the transceiver circuitry could be reduced while still allowing the transceiver to perform properly, resulting in a reduction in power consumption and an increase in the portable device's battery life. ('330 patent, col. 1, ll. 38-45; '728 patent, col. 1, ll. 40-47).

The '330 and '728 patents describe and claim systems and methods to achieve reduced power dissipation in wireless transceivers. Specifically, the inventions utilize bias current reduction, impedance scaling, gain and other dynamic changes, either separately or in combination, to achieve a reduction in power dissipation in circumstances that are better than the worst-case scenario conditions. ('330 patent, col. 1, ll. 52-58; '728 patent, col. 1, ll. 54-60).

In this action, Theta is asserting claims 29 and 30 of the '330 patent and claims 1, 2, 3, 4, 6, and 7 of the '728 patent. The parties agree that the terms "a first signal strength indicator circuit" and "an output-level-sensing circuit" from the '330 patent should be given their plain and ordinary meanings. The parties dispute the construction of the following terms:

- '330 Patent: "dynamically adjust[ed]"
- '330 Patent: "impedance"
- '728 Patent: "a component in the receiver signal path"
- '728 Patent: "scaling an impedance"
- '728 Patent: "interfering signals"
- '728 Patent: "interferer signal"
- '728 Patent: "substantially the desired signal with the interferer signal reduced by filtering from the input signal"
- '728 Patent: "variably changing an impedance"
- '728 Patent: "at least a component in the receiver path"

II. LEGAL STANDARDS

Phillips v. AWH Corp. is the seminal case on claim construction. 415 F.3d 1303 (Fed. Cir. 2005) (en banc). Per *Phillips*, claims should be read as having "the meaning that the term would have to a person of ordinary skill in the art in question at the time of the . . . effective filing date of the patent application." *Id.* at 1313. Because a person of ordinary skill in the art is understood to have read the claims, specifications, and file histories of the patents at issue, *Phillips* holds that statements from such "intrinsic evidence" are given weight when construing claims. *Id.* Only where this Court is unable to determine the meaning of a claim term after considering the intrinsic evidence—the patent and its prosecution history—may it then look to extrinsic evidence to resolve any ambiguity. *Dow Chem. Co. v. Sumitomo Chem. Co., Ltd.*, 257 F.3d 1364, 1373 (Fed. Cir. 2005).

In construing the claims of a patent, the Federal Circuit has repeatedly held that each claim term should generally be given its "ordinary and customary meaning." *Phillips*, 415 F.3d at 1312. "[T]he ordinary meaning of a claim term is its meaning to the ordinary artisan after reading the entire patent." *Phillips*, 415 F.3d at 1321 (internal quotations omitted). Deviation from the plain and ordinary meaning is permitted "under two circumstances: '(1) when a patentee sets out a definition and acts as [its] own lexicographer, or (2) when the patentee disavows the full scope of a claim term either in the specification or during prosecution.'" *Aventis Pharm. S.A. v. Hospira, Inc.*, 675 F.3d 1324, 1330 (Fed. Cir. 2012) (quoting *Thorner v. Sony Computer Entm't Am. L.L.C.*, 669 F.3d 1362 (Fed. Cir. 2012)).

Looking at the first condition of the *Thorner* test, "[t]o be his own lexicographer, a patentee must use a special definition of the term [that] is clearly stated in the patent specification or file history." *Laryngeal Mask Co. Ltd. v. Ambu*, 618 F.3d 1367, 1372 (Fed. Cir. 2010) (citations omitted). As *Thorner* holds, "[i]t is not enough for a patentee to simply disclose

a single embodiment or use a word in the same manner in all embodiments, the patentee must clearly express an intent to redefine the term." 669 F.3d at 1365 (citations omitted); *see also Abraxis Bioscience, Inc. v. Maybe Pharm. (USA), Inc.*, 467 F.3d 1370, 1376 (Fed. Cir. 2006) (Patentee acted as lexicographer by stating "by the term 'edetate,' we mean . . ." (emphasis added)). Absent a clear intent to redefine a claim term, the term's ordinary and customary meaning controls. *Thorner*, 669 F.3d at 1315.

Looking at the second condition of the *Thorner* test, the patentee must unambiguously disavow claim scope. "A statement in the prosecution history can only amount to disclaimer if the applicant 'clearly and unambiguously' disavowed claim scope." *Toshiba Corp. v. Imation Corp.*, 681 F.3d 1358, 1367 (Fed. Cir. 2012) (emphasis added and internal citation omitted). The patentee cannot disavow claim scope in the specification absent a "clear intention to limit the claim scope using words or expressions of manifest exclusion or restriction, which is necessary to further narrow the claim language." *Linear Tech. Corp. v. Int'l Trade Comm'n*, 566 F.3d 1049, 1058 (Fed. Cir. 2009) (citing cases); *see also Dealertrack, Inc. v. Huber*, 674 F.3d 1315, 1327 (Fed. Cir. 2012) ("[I]t is improper to read limitations from a preferred embodiment described in the specification—even if it is the only embodiment—into the claims absent a clear indication in the intrinsic record that the patentee intended the claims to be so limited." (emphasis added)).

III. PROPOSED CONSTRUCTIONS

For each disputed claim term, Theta believes the term should be given its plain and ordinary meaning, which is the meaning to a person of ordinary skill in the art after having read the claims, specifications, and file histories of the '330 and '728 patents. Therefore, in each discussion below, Theta will inform this Court of the relevant intrinsic evidence that defines the plain and ordinary meaning for each disputed term.

Additionally, none of the disputed claim terms allow for a deviation from the plain and ordinary meaning under the *Thorner* test. A review of the '330 and '728 patent specifications and file histories shows that the patentee did not clearly express an intent to redefine any of the disputed claim terms and that the patentee did not clearly and unambiguously limit the claim scope.

A. '330 Patent: "dynamically adjust[ed]"

Theta's Proposed Construction	Samsung's Proposed Construction
Plain and ordinary meaning - or, alternatively - "changing during operation"	"adjust[ed] in a continuous manner, as opposed to discrete steps"

Theta believes the term "dynamically adjust[ed]" does not require construction by the Court, and that it should be given its plain and ordinary meaning. Alternatively, should the Court determine that construction of this term is warranted, Theta proposes the term be construed to mean "changing during operation."

Theta's proposed construction of the term "dynamically adjust[ed]" is wholly consistent with the '330 patent specification. For example, the '330 patent states:

> The method itself includes **determining** a first signal strength at a first node in the signal path in the integrated circuit and **dynamically changing** an impedance of a component in the signal path **based on** the first signal strength.
>
> * * *
>
> The method itself includes **determining** a first signal strength at a first node in the signal path in the integrated circuit and **dynamically changing** a bias current in the signal path **based on** the first signal strength.
>
> * * *
>
> The method further includes **dynamically changing** a gain of the first circuit **based on** the first signal strength and **dynamically changing** an impedance of a component in the second circuit **based on** the first signal strength.

* * *

> An impedance in the signal path is configured to be **dynamically adjusted in response to** the first signal strength.

* * *

> A bias current in the signal path is configured to be **dynamically adjusted in response to** the first signal strength.

* * *

> A gain of the first circuit is configured to be **dynamically adjusted in response** to the first signal strength, and an impedance in the second circuit is configured to be **dynamically adjusted in response to** the first signal strength.

('330 patent, col. 2, ll. 11-15, 22-25, 33-37, 46-48, 57-59, col. 2, ll. 66 to col. 3, ll. 3).

Thus, the '330 patent uses the term "dynamically *adjusted*" interchangeably with the term "dynamically *changing*", and uses these terms to describe instances in which a second parameter (*e.g.*, an impedance, a bias current, a gain, etc.) is adjusted/changed "based on" or "in response to" a first parameter (*e.g.*, a signal strength). A person of ordinary skill in the art would understand that a first parameter, such as signal strength, is identified during operation of the system and would thus further understand that an adjustment/change of a second parameter based on or in response to the identification of the first parameter, such as a change in impedance based on or in response to the identified signal strength, likewise occurs during operation of the system.

Defendants' proposed construction of the term "dynamically adjust[ed]" – which seeks to interpret the term as "adjust[ed] in a continuous manner, as opposed to discrete steps" – is unduly limiting. At no time does the'330 patent limit the term "dynamically adjust[ed]" to adjustments/changes made in continuous manner; nor does the '330 patent at any time preclude the term "dynamically adjust[ed]" from applying to adjustments/changes made in discrete steps.

In fact, FIG. 13 of the ’330 patent (reproduced below) illustrates one example of a dynamic adjustment/change (*i.e.*, dynamic power dissipation) that occurs in a non-continuous manner.

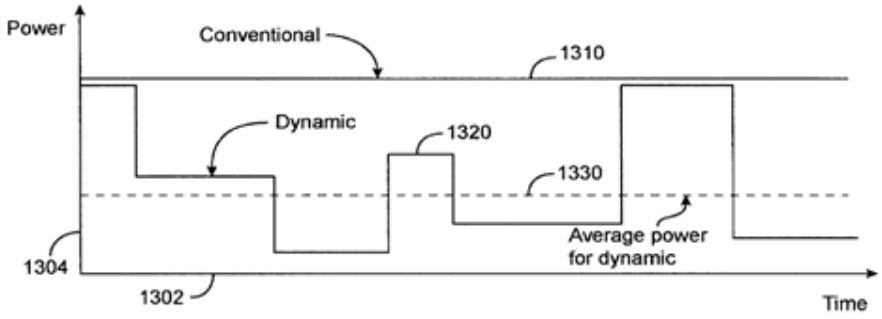

FIG. 13

In FIG. 13 the line 1320, labeled “Dynamic”, is one example of a dynamic adjustment/change (*i.e.*, in power dissipation) that is inclusive of discrete periodic adjustments/changes (represented by the vertical portions of line 1320) and intervening periods where no such adjustment/change occurs (represented by the horizontal portions of line 1320).

Accordingly, Defendants’ proposed construction, which lacks any support in the ’330 patent, and which is in fact contrary to at least one example disclosed therein, is improper and should be rejected.

Theta accordingly requests the term “dynamically adjust[ed]” be afforded its plain and ordinary meaning, or alternatively, the term be construed to mean “changing during operation.”

B. ’330 Patent: “impedance”

Theta’s Proposed Construction	Samsung’s Proposed Construction
Plain and ordinary meaning - or, alternatively - “a value of electrical resistance, electrical reactance, or both”	“the total opposition (i.e., resistance and reactance) a circuit offers to the flow of alternating current at a given frequency”

Theta believes that the term "impedance" does not require construction by the Court, and that it should be given its plain and ordinary meaning. Alternatively, should the Court determine that construction of "impedance" is warranted, Theta proposes that the term be construed to mean "a value of electrical resistance, electrical reactance, or both."

This proposed construction is wholly consistent with the '330 patent specification. For example, the '330 patent states:

> FIG. 6 is an example of how a circuit's impedances may be scaled to reduce drive currents, and, depending on the circuit configuration used, associated bias currents as well. A driver 612 has a load R 614 and C 616.

('330 patent, col. 7, ll. 44-47).

Here, the '330 patent refers to plural impedances and, as an example, indicates that one of those impedances is the resistance of the resistor component (R 614) and that another one of those impedances is the capacitive reactance of the capacitor component (C 616). Thus, the '330 patent refers to the resistance of the resistor, without reference to any reactance (capacitive or inductive) of the component, and refers to the capacitive reactance of the capacitor without reference to any resistance of the component.

The '330 patent provides further consistent examples of usage of the term "impedance." For example, the '330 patent states:

> For example, the current may be generated by placing a voltage across a resistor by applying a bias voltage to the base of a device whose emitter is connected to ground through a resistance. In this case, the resistor may be increased by opening switches across portions of the resistance . . . .

('330 patent, col. 7, ll. 36-40).

Here, the '330 patent refers to the resistance of a resistor, without reference to any reactance (capacitive or inductive) of the resistor.

In addition, other claims of the ’330 patent use the term “impedance” consistently with claim 29. For example, whereas claim 29 recites “an impedance in the second circuit” (’330 patent, col. 16, l. 10), claim 1 similarly recites “an impedance of a component in the signal path” (’330 patent, col. 12, ll. 66-67), with dependent claims 6 and 7 further specifying that the component in the signal path comprises a resistor or a capacitor, respectively (’330 patent, col. 13, ll. 15-18). Thus, the ’330 patent again refers to the impedance of a component, which may be a resistor, where the resistance of the resistor is referred to without reference to any reactance (capacitive or inductive) of the component, or which may be a capacitor, where the capacitive reactance of the capacitor is referred to without reference to any resistance of the component.

Defendants’ proposed construction, “the total opposition (*i.e.*, resistance and reactance) a circuit offers to the flow of alternating current at a given frequency,” is not a complete interpretation and is not consistent with the usage of the term “impedance” by the ’330 patent. Defendants’ proposed construction is incorrect because it only considers the effects of impedance on alternating current and completely excludes the effects of impedance on direct current. For example:

> Impedance, denoted Z, is an expression of the opposition that an electronic component, circuit, or system offers to alternating and/or direct electric current. Impedance is a vector (two-dimensional) quantity consisting of two independent scalar (one-dimensional) phenomena: resistance and reactance. … Resistance is observed with alternating current (AC) and also with direct current (DC). Reactance is expressed in imaginary number ohms. It is observed for AC, but not for DC.

(Ex. C, *Impedance*, **WhatIs.com**, http://whatis.techtarget.com/definition/impedance (last visited Feb. 22, 2017)).

As stated above, impedance does affect both alternating current and direct current. Further, whereas impedance is a quantity consisting of two independent phenomena: resistance

and reactance, it is understood that either resistance or reactance may be present or absent in any particular component independently of each other.

Further, Defendants' construction is inconsistent with the clear usage of the term by the '330 patent, in which the use of the term "impedance" encompasses references to the resistance of a component without reference to any reactance of the component, and references to the reactance of a component without reference to any resistance of the component.

Theta accordingly requests that "impedance" be afforded its plain and ordinary meaning, or alternatively, "impedance" should be construed to mean "a value of electrical resistance, electrical reactance, or both."

C. '728 Patent: "a component in the receiver signal path"

Theta's Proposed Construction	Samsung's Proposed Construction
Plain and ordinary meaning - or, alternatively - "an active or passive electronic device or circuit element in the receiver signal path"	"a component through which the input signal passes"

Theta believes the phrase "a component in the receiver signal path" does not require construction by the Court, and that it should be given its plain and ordinary meaning. Alternatively, should the Court determine that construction of this phrase is warranted, Theta proposes the phrase be construed to mean "an active or passive electronic device or circuit element in the receiver signal path."

The '728 patent presents several non-limiting examples of components in a receiver signal path. For example, the '728 patent states:

> Still a further exemplary embodiment of the present invention provides a wireless transceiver integrated circuit including ***a receiver having a signal path, the signal path including a low-noise amplifier, a mixer having an input coupled to an output of the low-noise amplifier, and a low-pass filter having an input coupled***

> ***to an output of the mixer***, as well as a first signal strength indicator circuit coupled to the signal path and configured to determine a first signal strength. An impedance in the signal path is configured to be dynamically adjusted in response to the first signal strength.
>
> Yet a further exemplary embodiment of the present invention provides a wireless transceiver integrated circuit. This integrated circuit includes ***a receiver comprising a signal path, the signal path having a low-noise amplifier, a mixer having an input coupled to an output of the low-noise amplifier, and a low-pass filter having an input coupled to an output of the mixer***, as well as a first signal strength indicator circuit coupled to the signal path, and configured to determine a first signal strength. A bias current in the signal path is configured to be dynamically adjusted in response to the first signal strength.
>
> * * *
>
> ***FIG. 14 is a block diagram of a portion of a receiver consistent with an embodiment of the present invention. Included are low-noise amplifier 1410, mixer 1420, gain stage 1430, filter 1440, AGC amplifier 1450***, and VCO 1460. Signal strength detection is done at the output of the low-noise amplifier by signal strength indicator 1470, at the output of the mixer by signal strength indicator 1472, and at the output of the filter by signal strength indicator 1474. The outputs of the signal strength indicator circuits are received by the computational circuit 1470, which in turn controls gain and power control circuits 1480 and 1485. Power and gain control circuits 1480 and 1485 control the gain, biasing, and impedance levels of the circuits in the receiver signal path. Also, the gain and power control circuits may control the same parameters in the VCO 1460. This figure is greatly simplified for purposes of explanation. For example, the quadrature nature of the mixers and following circuits are not shown. Also, power-down and start-up circuits are not included.

('728 patent, col. 2, ll. 39-59, col. 11, ll. 25-43). A person of ordinary skill in the art would understand that the foregoing non-limiting examples are illustrative of electronic devices, as well as circuits incorporating such devices, which may be present in the receiver signal path. It would also be readily understood that these non-limiting examples are inclusive of active devices/circuits (*e.g.*, mixer 1420; and a circuit including the same) and passive devices (*e.g.*, a filter 1440, having such passive resistors and capacitors as shown in the FIG. 6 example; and a circuit including the same).

Defendants' proposed construction of the phrase "a component in the receiver signal path" – which seeks to interpret the phrase as "a component through which the input signal passes" – seeks to import an unnecessary limitation and introduces uncertainty into construction of the phrase. For example, while a signal that is input into a receiver signal path might be characterized as an "input signal" and a signal that is output from a receiver signal path might be characterized as an "output signal," it remains unclear at what position along the receiver signal path would an "input signal" be sufficiently altered to become an "output signal" (or at least sufficiently altered to no longer be deemed an "input signal"). Accordingly, Defendants' proposed construction would import an unnecessary limitation, further complicating claim construction, and should therefore be rejected.

Theta accordingly requests the phrase "a component in the receiver signal path" be afforded its plain and ordinary meaning, or alternatively, the phrase be construed to mean "an active or passive electronic device or circuit element in the receiver signal path."

D. '728 Patent: "scaling . . . impedance"

Theta's Proposed Construction	Samsung's Proposed Construction
Plain and ordinary meaning - or, alternatively - "varying a value of electrical resistance, electrical reactance, or both"	"adjusting a load R and a capacitance C using the same factor"

Theta believes that the term "scaling . . . impedance" does not require construction by the Court, and that it should be given its plain and ordinary meaning. Alternatively, should the Court determine that construction of "scaling . . . impedance" is warranted, Theta proposes that the term be construed to mean "varying a value of electrical resistance, electrical reactance, or both."

This proposed construction is wholly consistent with the ’728 patent specification. For example, in Fig. 6, the ’728 patent shows:

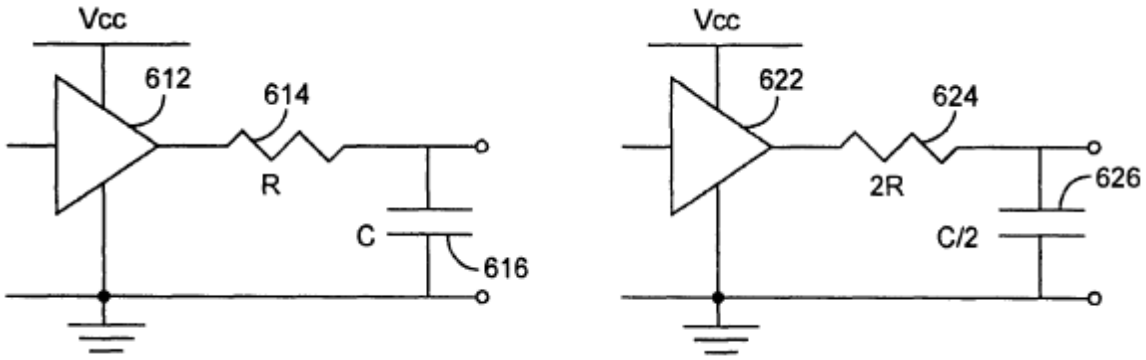

FIG. 6

(’728 patent, Fig. 6). In Fig. 6, the ’728 patent shows an example of impedance scaling. Although not explicitly stated, one of ordinary skill in the art would recognize that this circuit is a low-pass filter. The ’728 patent states:

> FIG. 6 is an example of how a circuit's impedances may be scaled to reduce drive currents, and, depending on the circuit configuration used, associated bias currents as well. A driver 612 has a load R 614 and C 616. The frequency response of this circuit is the same as that seen by driver 622, which drives an impedance of 2R 624 and C/2 626. But the impedance of the load seen by driver 622 is double that seen by 612, thus the output current required by the driver 622 is reduced by one half.

(’728 patent, col. 7, ll. 31-54).

In this example, the ’728 patent describes impedance scaling for the low-pass filter shown in Fig. 6. The ’728 patent describes that the impedances in the low-pass filter are scaled by doubling the resistance of the resistor and halving the capacitance of the capacitor. But the patent states that “the impedance of the load seen by driver 622 is double that seen by 612.” This doubling of the impedance of the load seen by the driver is accomplished by doubling the resistance of the resistor. Why then is the capacitance of the capacitor halved? The patent

explains that this is done so that the frequency response of the low-pass filter is kept the same. The halving of the capacitance is not done in order to scale (in this example, double) the impedance. Rather, halving of the capacitance is done to keep the frequency response of this low-pass filter the same.

The ’728 patent provides further consistent examples of usage of the term “scaling an impedance.” For example, the ’728 patent states that “impedances are scaled thus reducing required drive and other bias currents” (’728 patent, Abstract, col. 1, ll. 62-63), “circuit's impedances may be scaled to reduce drive currents, and depending on the circuit configuration used, to reduce associated bias currents as well” (’728 patent, col. 3, ll. 23-25, col. 7, ll. 31-33), and that “an impedance can be scaled in order to decrease a circuit's required drive current.” (’728 patent, col. 7, ll. 44-46). The patent describes numerous examples of scaling impedances so as to reduce the drive and/or bias currents. As shown by these examples, the only impedance that must be scaled to reduce the drive and/or bias currents is the resistance. Thus, in this example, the ’728 patent describes “scaling an impedance” as requiring only the scaling of a resistance, which is consistent with Theta’s proposed construction that does not require both the resistance and reactance to be varied.

Defendants’ proposed construction, “adjusting a load R and a capacitance C using the same factor,” is not consistent with the usage of the term “scaling . . . impedance” by the ’728 patent. As shown by the examples above, Defendants’ proposed construction does not make sense when applied to a circuit other than a filter. As shown in Fig. 6 and the description thereof, the only reason to scale **both** the resistance and the capacitance is to keep the frequency response of a filter the same. The plain language of claim 1 does not limit scaling the impedance to a filter, but rather recites scaling an impedance of any type of component. Rather, claim 1 requires

that the "scaling of the impedance of the . . . component . . . results in lower power dissipation" ('728 patent, claim 1, col. 12, ll. 61-63) without requiring both the resistance and reactance to be varied.

Defendants' construction seeks to impermissibly import limitations from a particular example in the specification into the claims. Such limitation is not only not required by a fair reading of the specification and claims of the '728 patent, it is clearly contrary to the specification and claims of the patent.

Theta accordingly requests that "scaling an impedance" be afforded its plain and ordinary meaning, or alternatively, "scaling an impedance" should be construed to mean "varying a value of electrical resistance, electrical reactance, or both."

E. '728 Patent: "interfering signals"

Theta's Proposed Construction	Samsung's Proposed Construction
Plain and ordinary meaning - or, alternatively - "signals that interfere with the receipt of the received desired signal"	"signals generated outside the transceiver by other transceivers or nearby electronic equipment that interfere with the receipt of the received desired signal"

Theta believes the term "interfering signals" does not require construction by the Court, and that it should be given its plain and ordinary meaning. Alternatively, should the Court determine that construction of this term is warranted, Theta proposes the term be construed to mean "signals that interfere with the receipt of the received desired signal."

Theta's proposed construction of the term "interfering signals" is wholly consistent with the '728 patent specification. For example, as illustrated in FIGS. 2A and 2B (provided below), the'728 patent states:

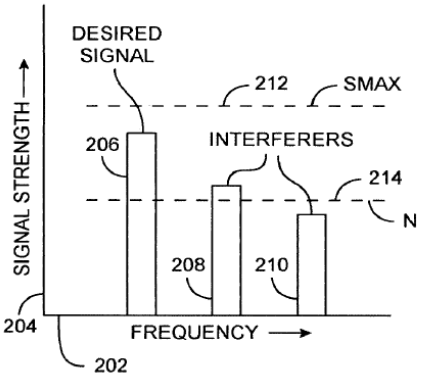

FIG. 2A

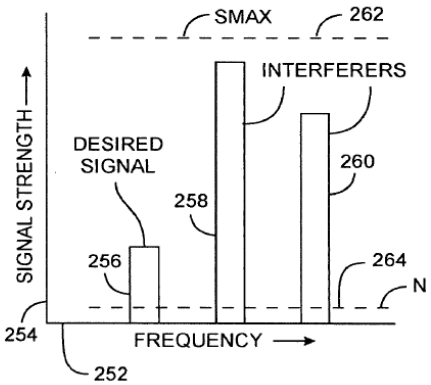

FIG. 2B

FIGS. 2A and 2B illustrate examples of desired signals, interferers, and noise that may be received by one of the various circuits in a wireless receiver. In each of these figures, the signal strength is plotted along a Y-axis 204 or 254 as a function of frequency along an X-axis 202 or 252. ***In the example of FIG. 2A, a received desired signal 206 is large in comparison to interfering signals 208 and 210***. In these examples, two interfering signals are shown for illustrative purposes, though there may be no such signals, one such signal, or more than two such signals in the frequency range of interest. Also, while for these examples the interferers are shown as being at a higher frequency than the desired signal, there may be one or more interferers at higher or lower frequencies as the desired signal. In this specific example, the acceptable noise floor 214 is relatively high, while maximum signal handling capability Smax 212 (that is the maximum signal power that can be handled with an acceptably low distortion) needs only to be high enough to accommodate the desired signal. For this specific example, the circuit receiving this input spectrum only requires a relatively small dynamic range for proper operation, that is the range between Smax 212 and the noise floor 214 is relatively small.

Conversely, in the example shown in FIG. 2B, the desired signal 256 is relatively weak compared to the large interferers 258 and 260. In this example, the noise floor 264 should be relatively low so as to prevent an unacceptable level of error in the recovery the desired signal 256. The maximum signal handling capability Smax 262 should be relatively high to accommodate the large interferers in order to avoid the creation of intermodulation products as described below. Accordingly, in this specific example, the circuit receiving this input spectrum should have a large dynamic range, particularly in comparison to the example of FIG. 2A.

It should be noted that the noise level or noise floors shown in these and the other included figures is the noise density integrated over the bandwidth of interest. For

> simplicity and comparison, this level is shown as a horizontal line, and is not meant to imply noise density.
>
> Often in wireless receivers, a circuit at different times will receive an input spectrum similar to those shown in FIGS. 2A and 2B. *The input spectrum of FIG. 2B is generally considered the worst-case input signal, and typical design methodology involves designing a receiver for this condition, specifically* ***the weakest desired signal accompanied by largest interference level***. Circuit impedances and currents are set such that the noise floor 264 is sufficiently low for an acceptable bit-error rate, while bias currents are set sufficiently high for the required Smax 262.
>
> *Conversely, the input spectrum in FIG. 2A is that of the best-case input signal, specifically,* ***a robust desired signal accompanied by no or low-level interferers***. In this case, the noise floor 214 may be allowed to rise, while the maximum signal handling capability Smax 212 may be reduced. When this is done, the receiver circuit may save significant power. For example, the circuit's impedances may be increased, thus reducing required drive currents. Similarly, bias currents may be lowered, thus reducing the maximum signal in handling capability.

('728 patent, col. 5, l. 20, col. 6, l. 10). As an initial matter, as seen from the above examples, it is noted that the '728 patent uses the terms "interfering" (*e.g.*, interfering signals 208 and 210; FIG. 2A) and "interferer" (*e.g.*, interferers 258 and 260; FIG. 2B) interchangeably. Theta submits that upon considering at least the above disclosures concerning FIGS. 2A and 2B, and the associated text, a person of ordinary skill in the art would readily recognize the term "interfering signals" as referring to signals that interfere with receipt of the desired signal – *e.g.*, with FIG. 2A illustrating an example of a strong desired signal (206) accompanied by low-levels of interference from interfering signals (208, 210); and with FIG. 2B illustrating an example of a weak desired signal (256) accompanied by high-levels of interference from interfering signals (258, 260).

Defendants' proposed construction of the term "interfering signals" – which seeks to interpret the phrase as "signals generated outside the transceiver by other transceivers or nearby electronic equipment that interfere with the receipt of the received desired signal" is in fact in

agreement with Theta's alternative proposed construction to the extent that both constructions interpret the term as "signals . . . that interfere with the receipt of the received desired signal." However, Defendants' proposed construction unduly limits the term to a single example disclosed in the '728 patent. Specifically, it appears Defendants' proposed construction seeks to limit the term "interfering signals" to the following statement in the '728 patent:

> One reason why this power drain is high is that electronic circuits are typically designed to function properly under worst-case operating conditions. ***For a wireless transceiver, the worst case condition is when a desired signal reception strength is low, while other transceivers or nearby electronic equipment generate interfering signals and other spurious noise***.

('728 patent, col. 1, ll. 33-39). However, this statement provides but one non-limiting example as to potential sources from which an interfering signal may originate, and does not preclude the occurrence of interfering signals that may originate from other sources. In fact, Theta submits that the origin or source of an interfering signal is in no way germane to the construction of the term "interfering signal" in and of itself.

Accordingly, Defendants' proposed construction would import an unnecessary limitation, and in fact seeks to introduce a limitation that is not pertinent to the interpretation of the term at hand, and should therefore be rejected.

Theta accordingly requests the term "interfering signals" be afforded its plain and ordinary meaning, or alternatively, the term be construed to mean "signals that interfere with the receipt of the received desired signal."

F. '728 Patent: "interferer signal"

Theta's Proposed Construction	Samsung's Proposed Construction
Plain and ordinary meaning - or, alternatively - "a signal that interferes with the receipt of the received desired signal"	"a signal generated outside the transceiver by other transceivers or nearby electronic equipment that interferes with the receipt of the received desired signal"

Theta believes the term "interferer signal" does not require construction by the Court, and that it should be given its plain and ordinary meaning. Alternatively, should the Court determine that construction of this term is warranted, Theta proposes this term be construed in accord with the construction given to the term "interfering signals", as discussed above in Section III.E, with the exception that the term "interfering signals" should be interpreted in the plural sense to mean "signals that interfere with the receipt of the received desired signal", whereas this term ("interferer signal") should instead be interpreted in the singular sense to mean "a signal that interferes with the receipt of the received desired signal."

Theta's reasoning in support of the proposed construction of the term "interferer signal" is the same as the reasoning presented above in Section III.E in support of Theta's proposed construction of the term "interfering signals."

Theta accordingly requests the term "interferer signal" be afforded its plain and ordinary meaning, or alternatively, the term be construed to mean "a signal that interferes with the receipt of the received desired signal."

G. ’728 Patent: “substantially the desired signal with the interferer signal reduced by filtering from the input signal”

Theta’s Proposed Construction	Samsung’s Proposed Construction
Plain and ordinary meaning - or, alternatively - “the useful, information-carrying portion of a received signal and the interferer signal, wherein the interferer signal has been reduced by a filter circuit from a level that the interferer signal had before the filter circuit”	Indefinite

Theta believes that the term “substantially the desired signal with the interferer signal reduced by filtering from the input signal” does not require construction by the Court, and that it should be given its plain and ordinary meaning. Alternatively, should the Court determine that construction of “substantially the desired signal with the interferer signal reduced by filtering from the input signal” is warranted, Theta proposes that the term be construed to mean “the useful, information-carrying portion of a received signal and the interferer signal, wherein the interferer signal has been reduced by a filter circuit from a level that the interferer signal had before the filter circuit.”

This term and its proposed construction are supported by the ’728 patent specification. First, regarding the language “the desired signal,” the ’728 patent states that “[t]he desired signal is the useful, information-carrying portion of a received signal.” (’728 patent, col. 5, ll. 11-13). This description is entirely consistent with what one of ordinary skill in the art would understand to be the plain and ordinary meaning of “the desired signal.”

Regarding the language “interfering signals,” one of ordinary skill in the art would understand the plain and ordinary meaning of “interfering signals.” *See* Section III.E, *supra*.

Regarding the language “reduced by filtering,” Fig. 4 of the ’728 patent shows:

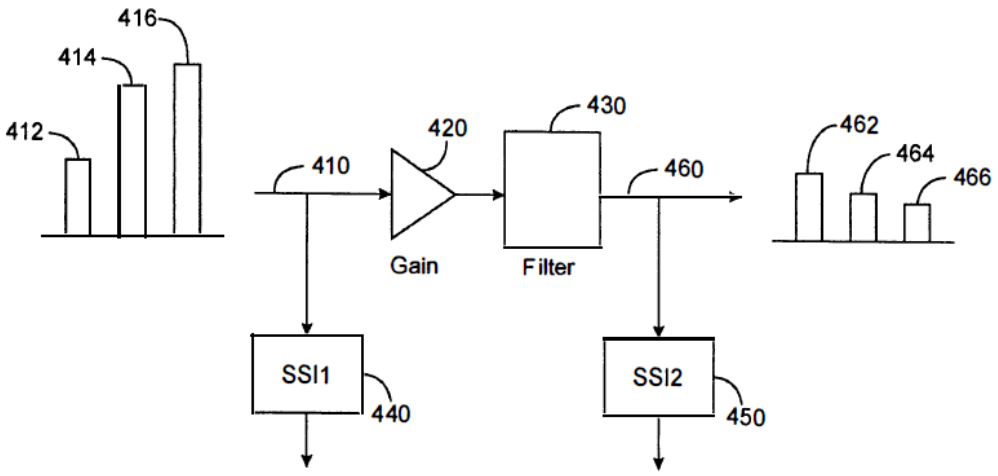

FIG. 4

The associated text of the ’728 patent states:

> FIG. 4 illustrates a portion of a receiver consistent with an embodiment of the present invention. Included is a filter 430. … . The signal spectrum at the output line 460 is shown as desired signal 462 and interferers 464 and 466. The signal strength indicators 440 and 450 do not provide information as to the relative sizes of the desired and interfering signals. Rather, a cumulative signal level is provided at their outputs. provided at their outputs. For example, the first signal strength indicator 440 outputs a level corresponding to the sum of desired signal 412 and interfering signals 414 and 416, while the second signal strength indicator 450 provides a signal level corresponding to the sum of desired signal 462 and interfering signals 464 and 466. In this specific example, the gain of the gain and filter circuit combinations is shown as approximately one, while the interfering signals 414 and 416 signal levels are reduced.
>
> A comparison of the signal levels provided by the signal strength indicators 440 and 450 indicates that much of the combined received signal on line 410 has been filtered. Accordingly, it may be deduced that large interfering signals present at the input are being filtered by the filter 430.

(’728 patent, col. 6, ll. 36-61).

Here, the ’728 patent describes the operation of a filter to reduce the interfering signals relative to the desired signal. For example, the patent states that “interfering signals present at the input are being filtered by the filter 430.” (’728 patent, col. 6, ll. 53-56). Additionally, Fig. 4

shows interferers 464 and 466 reduced relative to desired signal 462, and the patent states that the interfering signal levels are reduced, illustrating that the interfering signals were filtered and as a result, their levels were reduced. This description is entirely consistent with what one of ordinary skill in the art would understand to the plain and ordinary meaning of "reduced by filtering."

Finally, regarding the term "substantially the desired signal with the interferer signal reduced by filtering from the input signal" as a whole, "substantially" merely modifies the plain language of the rest of the term to not require an excessive amount of precision. These are real world signals that are being processed, and as such, are never exactly at a specified level. The language "substantially" would be understood by one of ordinary skill in the art as merely not requiring an excessive amount of precision.

The patent further describes one more factor that is present in the receiver signal path, noise, which illustrates the need for the modifying term "substantially." The patent describes noise as "thermal, shot, or other noise generated on the integrated circuit, in addition to received noise generated by sources external to the chip." ('728 patent, col. 5, ll. 13-15). Noise is always present in electrical signals and always produces some error in the signals. In other words, noise always prevents the desired signals, and any interfering signals, from being exactly at any specified level. For example, the patent states that "the noise floor 264 should be relatively low so as to prevent an unacceptable level of error in the recovery the desired signal 256." ('728 patent, col. 5, ll. 44-46).

To establish that a claim is invalid for indefiniteness, Defendants "must demonstrate by clear and convincing evidence that one skilled in the relevant art could not discern the boundaries of the claim based on the claim language, the specification, the prosecution history,

and the knowledge in the relevant art." *Teva Pharmaceuticals USA, Inc. v. Sandoz, Inc.*, 723 F.3d 1363, 1368 (Fed. Cir. 2013) (quoting *Wellman, Inc. v. Eastman Chem. Co.*, 642 F.3d 1355, 1366 (Fed. Cir. 2011)). If one having ordinary skill in the art is able to understand the claim after reading the claims and specification, the claim is valid. *See Energizer Holdings, Inc. v. Int'l Trade Comm'n*, 435 F.3d 1366, 1370 (Fed. Cir. 2006).

As shown above, one of ordinary skill in the art would easily understand the term "substantially the desired signal with the interferer signal reduced by filtering from the input signal" after reading the claims and specification. Accordingly, the term is not indefinite.

Theta accordingly requests the term "substantially the desired signal with the interferer signal reduced by filtering from the input signal" be afforded its plain and ordinary meaning, or alternatively, the term be construed to mean "the useful, information-carrying portion of a received signal and the interferer signal, wherein the interferer signal has been reduced by a filter circuit from a level that the interferer signal had before the filter circuit."

H. '728 Patent: "variably changing . . . impedance"

Theta's Proposed Construction	Samsung's Proposed Construction
Plain and ordinary meaning - or, alternatively - "varying a value of electrical resistance, electrical reactance, or both"	"adjust[ed] in a continuous manner, as opposed to discrete steps"

Theta believes that the term "variably changing . . . impedance" does not require construction by the Court, and that it should be given its plain and ordinary meaning. Alternatively, should the Court determine that construction of "variably changing . . . impedance" is warranted, Theta proposes that the term be construed consistently with the term

"scaling . . . impedance" to mean "varying a value of electrical resistance, electrical reactance, or both."

This proposed construction is wholly consistent with the '728 patent specification, as described, for example, in the discussion supporting Theta's proposed construction of "scaling . . . impedance" in Section III.D above. In addition, construing the term "variably changing . . . impedance" consistently with the term "scaling . . . impedance" is consistent with the specification. For example, the '728 patent states:

> FIG. 13 is an example shown how power may be saved a function of time by employing one or more of these methods consistent with embodiments of the present invention. … As can be seen, dynamic power dissipation 1320 under the control of variable gains, impedances, biasing, or combination thereof, allows for lower average power 1728 as compared to the power dissipated 1310 by the conventional design.

('728 patent, col. 11, ll. 14-24).

The specification of the '728 patent uses the language "scaled" and "scaling" (see Section III.D. above) similarly to the way the word "variable" is used in the excerpt above. Thus, the use of the word "variable" in the specification of the '728 patent is consistent with the use of the word "scaling" in the specification.

Defendants' proposed construction, "adjust[ed] in a continuous manner, as opposed to discrete steps," is incorrect because it is contrary to the usage of the term by the '728 patent and seeks to exclude an embodiment described in the patent. Defendants' proposed construction would exclude discrete steps from being included in the term. However, Fig. 13 of the '728 patent shows:

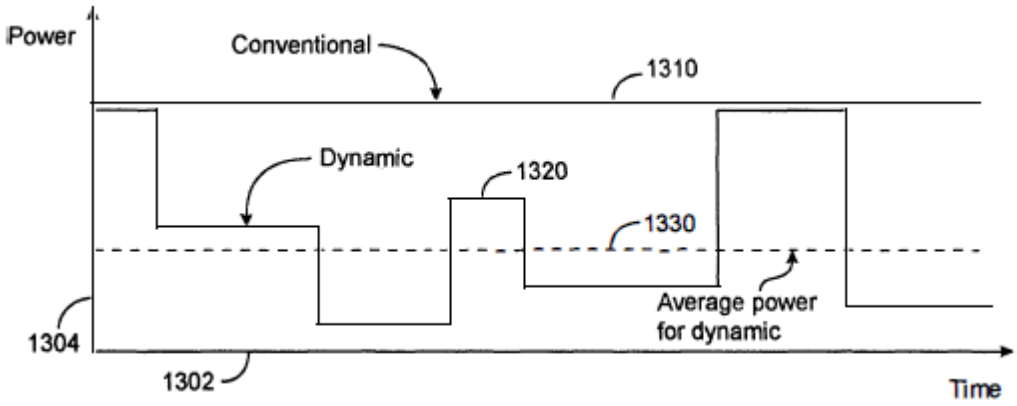

FIG. 13

('728 patent, Fig. 13).

The associated text of the '728 patent describes Fig. 13 as showing "dynamic power dissipation 1320 under the control of variable gains, impedances, biasing, or combination thereof." ('728 patent, col. 11, ll. 20-22). One of ordinary skill in the art would recognize that Fig. 13 shows an exemplary embodiment in which the power dissipation under control of variable impedance is being changed in discrete steps, which means that the impedance must be variably changed in discrete steps as well. Defendants' construction would impermissibly exclude this exemplary embodiment from the construction of the term.

For another example, Fig. 14 shows:

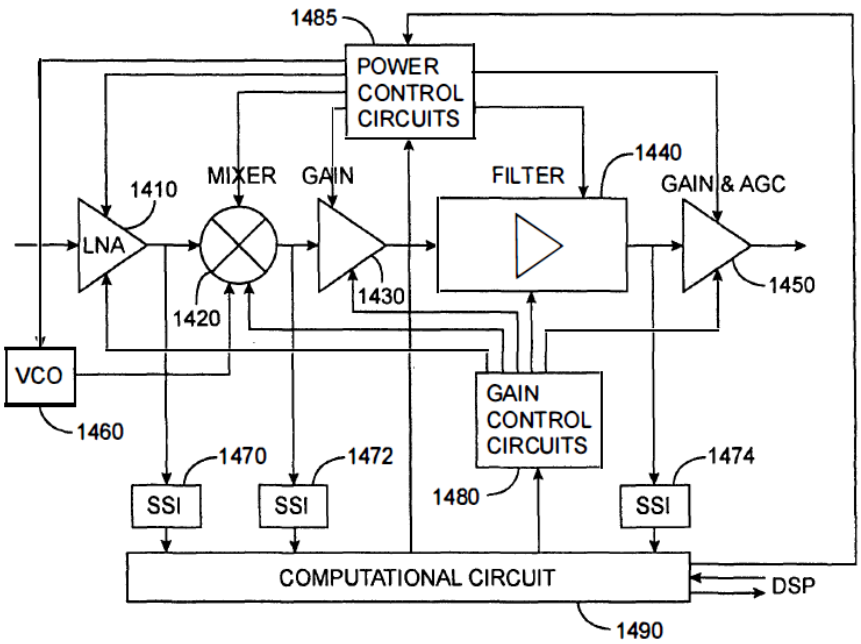

FIG. 14

(’728 patent, Fig. 13).

The associated text of the ’728 patent describes Fig. 14 as showing:

> [A] block diagram of a portion of a receiver consistent with an embodiment of the present invention. … Power and gain control circuits 1480 and 1485 control the gain, biasing, and impedance levels of the circuits in the receiver signal path.

(’728 patent, col. 11, ll. 25-37).

One of ordinary skill in the art would recognize that in this embodiment, the impedance levels of the circuits are controlled by digital computational circuit 1490. Digital circuitry inherently operates using discrete steps. Accordingly, this is also an exemplary embodiment in which the variable impedance is being changed in discrete steps. Defendants’ construction would impermissibly exclude this exemplary embodiment from the construction of the term as well.

Theta accordingly requests that “variably changing . . . impedance” be afforded its plain and ordinary meaning, or alternatively, “variably changing . . . impedance” should be construed to mean “varying a value of electrical resistance, electrical reactance, or both.”

I. '728 Patent: "at least a component in the receiver path"

Theta's Proposed Construction	Samsung's Proposed Construction
Plain and ordinary meaning - or, alternatively - "an active or passive electronic device or circuit element in the receiver signal path"	Indefinite

Theta believes the phrase "at least a component in the receiver path" does not require construction by the Court, and that it should be given its plain and ordinary meaning. Alternatively, should the Court determine that construction of this phrase is warranted, Theta proposes the phrase be construed to mean "an active or passive electronic device or circuit element in the receiver signal path."

The '728 patent presents several non-limiting example of components in a receiver signal path. For example, the '728 patent states:

> Still a further exemplary embodiment of the present invention provides a wireless transceiver integrated circuit including ***a receiver having a signal path, the signal path including a low-noise amplifier, a mixer having an input coupled to an output of the low-noise amplifier, and a low-pass filter having an input coupled to an output of the mixer***, as well as a first signal strength indicator circuit coupled to the signal path and configured to determine a first signal strength. An impedance in the signal path is configured to be dynamically adjusted in response to the first signal strength.
>
> Yet a further exemplary embodiment of the present invention provides a wireless transceiver integrated circuit. This integrated circuit includes ***a receiver comprising a signal path, the signal path having a low-noise amplifier, a mixer having an input coupled to an output of the low-noise amplifier, and a low-pass filter having an input coupled to an output of the mixer***, as well as a first signal strength indicator circuit coupled to the signal path, and configured to determine a first signal strength. A bias current in the signal path is configured to be dynamically adjusted in response to the first signal strength.
>
> * * *
>
> ***FIG. 14 is a block diagram of a portion of a receiver consistent with an embodiment of the present invention. Included are low-noise amplifier 1410,***

> ***mixer 1420, gain stage 1430, filter 1440, AGC amplifier 1450***, and VCO 1460. Signal strength detection is done at the output of the low-noise amplifier by signal strength indicator 1470, at the output of the mixer by signal strength indicator 1472, and at the output of the filter by signal strength indicator 1474. The outputs of the signal strength indicator circuits are received by the computational circuit 1470, which in turn controls gain and power control circuits 1480 and 1485. Power and gain control circuits 1480 and 1485 control the gain, biasing, and impedance levels of the circuits in the receiver signal path. Also, the gain and power control circuits may control the same parameters in the VCO 1460. This figure is greatly simplified for purposes of explanation. For example, the quadrature nature of the mixers and following circuits are not shown. Also, power-down and start-up circuits are not included.

('728 patent, col. 2, ll. 39-59, col. 11, ll. 25-43). A person of ordinary skill in the art would understand that the foregoing non-limiting examples are illustrative of electronic devices, as well as circuits incorporating such devices, which may be present in the receiver signal path. It would also be readily understood that these non-limiting examples are inclusive of active devices/circuits (e.g., mixer 1420; and a circuit including the same) and passive devices (e.g., a filter 1440, having such passive resistors and capacitors as shown in the FIG. 6 example; and a circuit including the same).

Defendants' contention that the phrase "at least a component in the receiver path" is indefinite is unreasonable. It is well-established that a party seeking to prove that a patent claim is invalid for indefiniteness "must demonstrate by clear and convincing evidence that one skilled in the relevant art could not discern the boundaries of the claim based on the claim language, the specification, the prosecution history, and the knowledge in the relevant art." *Teva Pharmaceuticals USA, Inc. v. Sandoz, Inc.*, 723 F.3d 1363, 1368 (Fed. Cir. 2013) (quoting *Wellman, Inc. v. Eastman Chem. Co.*, 642 F.3d 1355, 1366 (Fed. Cir. 2011)). If one having ordinary skill in the art is able to understand the claim after reading the claims and specification, the claim is valid. *See Energizer Holdings, Inc. v. Int'l Trade Comm'n*, 435 F.3d 1366, 1370 (Fed. Cir. 2006).

Theta submits that a person of ordinary skill in the art would readily discern the meanings of the phrase "at least a component in the receiver path" based at least on the above-excerpted examples taken from the specification of the '743 patent.

Theta accordingly requests the phrase "at least a component in the receiver path" be afforded its plain and ordinary meaning, or alternatively, the phrase be construed to mean "active or passive electronic device or circuit element in the receiver signal path."

IV. CONCLUSION

For the foregoing reasons, the Court should adopt Theta's proposed constructions for the disputed claim terms.

DATED: April 11, 2017

Respectfully submitted,

/s/ Edward A. Pennington
Elizabeth L. DeRieux
State Bar No. 05770585
ederieux@capshawlaw.com
Capshaw DeRieux, LLP
114 E. Commerce Ave.
Gladewater, TX 75647
Telephone: 903.845.5770

Edward A. Pennington (admitted *pro hac vice*)
John P. Moy (admitted *pro hac vice*)
Sean T.C. Phelan (admitted *pro hac vice*)
John P. Pennington (admitted *pro hac vice*)
Darlene K. Tzou (admitted *pro hac vice*)
SMITH, GAMBRELL & RUSSELL, LLP
1055 Thomas Jefferson St. NW, Suite 400
Washington, DC 20007
Tel: 202-263-4300
Fax: 202-263-4329
Email: epennington@sgrlaw.com
Email: jmoy@sgrlaw.com
Email: sphelan@sgrlaw.com
Email: jpennington@sgrlaw.com
Email: dtzou@sgrlaw.com

Attorneys for Plaintiff
Theta IP, LLC

CERTIFICATE OF SERVICE

The undersigned hereby certifies that counsel of record for Samsung in the above-captioned action is being served with this document by CM/ECF on April 11, 2017.

/s/ Edward A. Pennington