INFORMATION TO USERS

This manuscript has been reproduced from the microfilm master. UMI films the text directly from the original or copy submitted. Thus, some thesis and dissertation copies are in typewriter face, while others may be from any type of computer printer.

The quality of this reproduction is dependent upon the quality of the copy submitted. Broken or indistinct print, colored or poor quality illustrations and photographs, print bleedthrough, substandard margins, and improper alignment can adversely affect reproduction.

In the unlikely event that the author did not send UMI a complete manuscript and there are missing pages, these will be noted. Also, if unauthorized copyright material had to be removed, a note will indicate the deletion.

Oversize materials (e.g., maps, drawings, charts) are reproduced by sectioning the original, beginning at the upper left-hand corner and continuing from left to right in equal sections with small overlaps.

Photographs included in the original manuscript have been reproduced xerographically in this copy. Higher quality 6" x 9" black and white photographic prints are available for any photographs or illustrations appearing in this copy for an additional charge. Contact UMI directly to order.

ProQuest Information and Learning
300 North Zeeb Road, Ann Arbor, MI 48106-1346 USA
800-521-0600

UMI®

Petitioners Lenovo (United States) Inc.
and Motorola Mobility LLC - Ex. 1017

Reproduced with permission of the copyright owner. Further reproduction prohibited without permission.

Reproduced with permission of the copyright owner. Further reproduction prohibited without permission.

OPTIMAL POWER CONTROL IN CELLULAR WIRELESS SYSTEMS

BY LIJUN QIAN

A dissertation submitted to the

Graduate School—New Brunswick

Rutgers, The State University of New Jersey

in partial fulfillment of the requirements

for the degree of

Doctor of Philosophy

Graduate Program in Electrical and Computer Engineering

Written under the direction of

Prof. Zoran Gajic

and approved by

Debasis Mitra

R D Yates

M.B.J. Narayan

Z Gajic

New Brunswick, New Jersey

May, 2001

Reproduced with permission of the copyright owner. Further reproduction prohibited without permission.

UMI Number: 3026333

Copyright 2001 by
Qian, Lijun

All rights reserved.

UMI®

UMI Microform 3026333
Copyright 2001 by Bell & Howell Information and Learning Company.
All rights reserved. This microform edition is protected against
unauthorized copying under Title 17, United States Code.

Bell & Howell Information and Learning Company
300 North Zeeb Road
P.O. Box 1346
Ann Arbor, MI 48106-1346

Reproduced with permission of the copyright owner. Further reproduction prohibited without permission.

© 2001

Lijun Qian

ALL RIGHTS RESERVED

Reproduced with permission of the copyright owner. Further reproduction prohibited without permission.

ABSTRACT OF THE DISSERTATION

Optimal Power Control in Cellular Wireless Systems

by Lijun Qian

Dissertation Director: Prof. Zoran Gajic

In this research work, the problem of optimal Signal-to-Interference Ratio (SIR) based power control in cellular wireless systems is considered. CDMA technology used in 3-G wireless systems relies on accurate power control, not only for maximizing the battery life of mobile terminals, but also as an important technique for maintaining users' Quality-of-Service (QoS) and optimizing system capacity by controlling interference.

An optimal distributed closed-loop SIR-based power control scheme is proposed to minimize the squared SIR error. The power change is proportional to the SIR error. The optimal proportional gain is chosen to achieve the minimum SIR error at the next time instant. An H_∞ filter is applied in the proposed scheme instead of the Kalman filter to facilitate the system filtering regardless of the nature of the system and measurement disturbances. The proposed scheme has very fast convergence speed. It is also a robust scheme, which adapt to interference and channel changes. A joint optimization of the mobile terminal's transmission power and SIR error is also proposed to provide a tradeoff between the provided QoS and the power consumption. Simulation results confirm theoretical analysis in all cases.

A stochastic optimal power control algorithm is proposed, assuming that the SIR measurements are contaminated by white noise. The power control system is a linear

Reproduced with permission of the copyright owner. Further reproduction prohibited without permission.

time-varying system driven by white noise. The optimal controller gain is obtained by minimization of the sum of the variances of the mobile terminal's transmission power and SIR error. An estimator is proposed to deal with the changes of the link gains. The users' SIR converge to the target value within 40 steps. A proportional derivative controller is added to the proposed power control scheme in order to reduce the overshoot and improve the transient response. Simulation results show that the performance of the proposed power control scheme will not be affected much with quantization.

Some preliminary analytical results on game theoretical approaches are also provided. The proposed power control scheme is proved to achieve the Nash equilibrium point of the system.

Reproduced with permission of the copyright owner. Further reproduction prohibited without permission.

Acknowledgements

I would like to thank my advisor Dr. Zoran Gajic for his patience and encouragement during the five years at Rutgers University. I would also like to thank Dr. Narayan Mandayam, Dr. Chris Rose, Dr. Roy Yates from WINLAB and Dr. Debasis Mitra from Bell Labs, Lucent Technologies for helpful discussions and comments. Finally, I would like to thank the Electrical and Computer Engineering Department for providing a wonderful research environment.

Reproduced with permission of the copyright owner. Further reproduction prohibited without permission.

Dedication

To My Parents

Reproduced with permission of the copyright owner. Further reproduction prohibited without permission.

Table of Contents

Abstract ii

Acknowledgements iv

Dedication v

List of Tables viii

List of Figures ix

List of Abbreviations xii

1. Review of SIR based Power Control in Cellular Wireless Systems . 1

1.1. SIR based Power Control in Narrowband Wireless Systems 1

1.2. SIR based Power Control in Spread Spectrum Wireless Systems 3

1.3. Convergence Properties of Distributed Power Control Algorithms 4

1.4. Supporting Voice/Data Users Simultaneously in 3G Wireless Networks . 5

1.5. Capacity Improvement through Combined Techniques 5

1.6. Estimation Based Power Control 6

1.7. Stochastic Power Control 7

1.8. Power Control using Game Theory 7

1.9. Motivation of the Research Work 7

1.10. Outline of the Dissertation 9

2. Optimal Closed-Loop SIR-based Distributed Power Control using H_∞ Filter - Deterministic Case 12

2.1. Optimal SIR-based Distributed Power Control by Unconstrained Optimization 12

Reproduced with permission of the copyright owner. Further reproduction prohibited without permission.

2.2. Optimal SIR-based Distributed Power Control by Constrained Optimization 17
2.3. Joint Minimization of SIR Error and Mobile Transmission Power 23
2.3.1. Unconstrained Optimization 23
2.3.2. Constrained Optimization 26
2.4. H_∞ Filter as an Optimal Estimator/Predictor 30
2.5. Simulation Results and Analysis 34
2.6. Practical Issues 39

3. Optimal Closed-Loop SIR-based Distributed Power Control - Stochastic Case 53
3.1. Stochastic Measurement of SIR 53
3.2. Optimal Stochastic Power Control 56
3.3. Extended Results and Analysis 63
3.3.1. Estimation based Stochastic Power Control 65
3.3.2. Improvement by adding PD Controller 70
3.4. Effect of Quantization 70
3.5. Conclusions and Comments 71

4. Preliminary Results on Noncooperative and Cooperative Power Control 74
4.1. Noncooperative Games: Nash Strategy 74
4.2. Cooperative Games: Pareto Strategy 76
4.3. Pareto Optimal Solution of Network Level Optimization 77

5. Conclusions 80
References 82
Appendix 88
Vita 92

Reproduced with permission of the copyright owner. Further reproduction prohibited without permission.

List of Tables

Table 2.1. Steady-state performance of user 1 using optimal scheme and IS-95 48

Reproduced with permission of the copyright owner. Further reproduction prohibited without permission.

List of Figures

2.1. Base station behavior in 3-G wireless systems 13

2.2. Optimal SIR-based distributed power control of cellular wireless systems 16

2.3. The optimal distributed power control system with an estimator 16

2.4. The complete optimal distributed power control system with estimators (N links) 18

2.5. The structure of the discrete-time H_∞ filter 34

2.6. Link gains in dB 36

2.7. SIR error when γ^{tar} is feasible 41

2.8. Power evolution when γ^{tar} is feasible 41

2.9. Performance of the H_∞ filter when γ^{tar} is feasible 42

2.10. SIR error when γ^{tar} is set too high 42

2.11. Power evolution when γ^{tar} is set too high 43

2.12. Performance of the H_∞ filterwhen γ^{tar} is set too high 43

2.13. SIR error when γ^{tar} is set too low 44

2.14. Power evolution when γ^{tar} is set too low 44

2.15. Performance of the H_∞ filter when γ^{tar} is set too low 45

2.16. Power evolution 45

2.17. SIR error 46

2.18. Fast convergence of the proposed power control scheme: Power evolution 46

2.19. Fast convergence of the proposed power control scheme: SIR 47

2.20. Comparison between the power control scheme minimizing SIR error only, and joint minimization of SIR error and transmission power and IS-95: power evolution 47

Reproduced with permission of the copyright owner. Further reproduction prohibited without permission.

2.21. Comparison between the power control scheme minimizing SIR error only, and joint minimization of SIR error and transmission power and IS-95: SIR of user 1 48
2.22. Performance of users with different SIR targets 49
2.23. Performance of users with different SIR targets 49
2.24. SIR of user 1 under different optimization parameters 50
2.25. Transmission power of user 1 under different optimization parameters . 50
2.26. SIR of user 1 under fading channels and different optimization parameters 51
2.27. Transmission power of user 1 under fading channels and different optimization parameters 51
2.28. Closed-loop power control architecture in 3-G wireless systems 52
2.29. Implementation of the optimal control scheme in 3-G wireless systems: frame format 52
3.1. Base station behavior in 3-G wireless systems 54
3.2. The optimal stochastic power control system 62
3.3. The average SIR of all users under optimal stochastic power control . . 63
3.4. The transmission power of users under optimal stochastic power control 64
3.5. The covariance of mobile's transmission power under optimal stochastic power control 64
3.6. The optimal stochastic power control system 66
3.7. Average SIR of all the users using the Kalman filter 67
3.8. Average SIR of all the users using the H_∞ filter 67
3.9. Transmission power of users 68
3.10. Variance of transmission powers 68
3.11. SIR performance when channel fading is severe 69
3.12. SIR performance by low-pass filter when channel fading is severe 69
3.13. The proportional derivative controller 70

Reproduced with permission of the copyright owner. Further reproduction prohibited without permission.

3.14. Transmission power of user 1 with added proportional derivative controller 71
3.15. Transmission power of user 1 with/without quantization 72
3.16. The SIR of users with quantization 72
4.1. Pareto strategies of a two-user cooperative game 77
A.1. SIMULINK Model: The optimal distributed fast closed-loop SIR-based power control scheme (2-user case) 89
A.2. SIMULINK Model: The optimal distributed fast closed-loop SIR-based power control scheme (4-user case) 90
A.3. SIMULINK Model: H_∞ filter for the first user 91

Reproduced with permission of the copyright owner. Further reproduction prohibited without permission.

List of Abbreviations

BER is for Bit Error Rate

CAC is for Call Admission Control

CDMA is for Code Division Multiple Access

CIR is for Carrier-to-Interference Ratio

DCPC is for Distributed Constrained Power Control

DS is for Direct Sequence

FER is for Frame Error Rate

IMT-2000 is for International Mobile Telecommunications 2000

ISRA is for Improved Stepwise Removal Algorithm

MAI is for Multiple Access Interference

QoS is for Quality of Service

PCG is for Power Control Group

PCS is for Personal Communication System

PD is for Proportional Derivative

SIR is for Signal-to-Interference Ratio

SRA is for Stepwise Removal Algorithm

TDMA is for Time Division Multiple Access

TPC is for Transmission Power Control

UMTS is for Universal Mobile Telecommunications System

Reproduced with permission of the copyright owner. Further reproduction prohibited without permission.

Chapter 1

Review of SIR based Power Control in Cellular Wireless Systems

In a cellular wireless network, certain quality-of-service (QoS) should be maintained for all active users in the network. A quantity that measures user's provided QoS is the signal-to-interference ratio (SIR). A general idea to achieve the desired SIR for all active users is to allocate the network resources in the most efficient way. Resource allocation in a cellular wireless network includes channel allocation, power control, etc. The transmitter power is the most valuable resource in the network. By proper control of each transmitter power, the interference can be minimized. At the same time, it extends the battery life in the handset.

1.1 SIR based Power Control in Narrowband Wireless Systems

In this section, only narrowband wireless networks are considered. Time and frequency slots are partitioned in a narrowband wireless network in order to avoid mutual interference between users. Users can share the same time or frequency slot provided they are sufficiently far apart, and such users are termed cochannel users. The issue of power control in narrowband wireless networks arises because the cochannel users interfere with each other. The optimum open loop power allocation problem is formulated as

$$\min_{p_i} \sum_i p_i \tag{1.1}$$

subject to the constraints

$$\gamma_i \geq \gamma_i^{tar} \tag{1.2}$$

$$\underline{p}_i < p_i < \bar{p}_i \tag{1.3}$$

Reproduced with permission of the copyright owner. Further reproduction prohibited without permission.

where γ_i is the SIR of user i, γ_i^{tar} is the desired SIR of user i, $\underline{p}_i$ and $\bar{p}_i$ are the lower and upper bounds on transmitted power p_i, respectively. This is a typical linear programming problem, and was considered in [1]. The Carrier/Interference (C/I) balancing scheme was discussed by Zander [2]-[3] and Grandhi et.al. [4]-[5]. These schemes achieve C/I balancing, which yields a 'fair' distribution of the interference in the sense that all users experience the same C/I level, or have the same CIR/SIR. In [2], a stepwise cell removal and C/I balancing scheme was introduced to achieve minimum outage probability, which is defined by the probability that some randomly chosen mobile has a C/I (CIR/SIR) below a required C/I (CIR/SIR). Proposition 1 in [2] stated that C/I balancing is equivalent to maximization of the achievable CIR/SIR for all users. Proposition 2 in [2] stated that if the CIR/SIR is not achievable, then in order to minimize the outage probability, stepwise cell removal is required to reduce interference.

In [4], the problem of maximizing the minimum CIR/SIR was proposed and was proved to be equivalent to C/I balancing. When the required CIR/SIR is achievable, the problem is reduced to solving a group of linear equations (using the same notation as in [4])

$$(I - \gamma A)P = 0 \tag{1.4}$$

which implies

$$AP = \frac{1}{\gamma}P \tag{1.5}$$

Hence $\frac{1}{\gamma}$ is the eigenvalue of A and P is the corresponding eigenvector. Note that P is *not* unique. Furthermore, A has zeros on the diagonal and very small positive numbers out of diagonal, which means the eigenvalues of A are also very small numbers.

The work of Foschini [7] presented dynamics of CIR/SIR evolution (using the same notation as in [7]) by

$$\dot{\rho}_i(t) = -\beta(\rho_i(t) - \rho) \tag{1.6}$$

Then by assuming the i th user would evolve ρ_i as if the interference were not going to change, the key differential equation of power evolution was obtained by taking "a surrogate derivative" of CIR/SIR

$$\dot{p}_i(t) = -\beta(p_i(t) - (\rho/a_{ii}(\nu + \sum_{j \neq i} a_{ij}p_j(t))) \tag{1.7}$$

Reproduced with permission of the copyright owner. Further reproduction prohibited without permission.

The above equations in matrix form are given by

$$\dot{p}(t) = -\beta B p(t) + \beta\eta \tag{1.8}$$

where

$$B = \begin{bmatrix} 1 & \frac{-\rho a_{12}}{a_{11}} & \cdots & \frac{-\rho a_{1J}}{a_{11}} \\ \frac{-\rho a_{21}}{a_{22}} & 1 & \cdots & \frac{-\rho a_{2J}}{a_{22}} \\ \vdots & \vdots & \ddots & \vdots \\ \frac{-\rho a_{J1}}{a_{JJ}} & \frac{-\rho a_{J2}}{a_{JJ}} & \cdots & 1 \end{bmatrix} \tag{1.9}$$

$$\eta = \rho[(\nu/a_{11}),\ (\nu/a_{22}),\ \cdots,\ (\nu/a_{JJ})]' \tag{1.10}$$

A proposition which stated the convergence property of (8) was given in [7]. To prove that proposition, the eigenvalues of $-B$ have to have negative real parts. Since the entries in matrix B depend on the target CIR/SIR and link gains, certain feasibility conditions are needed to guarantee that "all the eigenvalues of $-B$ have negative real parts".

1.2 SIR based Power Control in Spread Spectrum Wireless Systems

In recent years, there has been increasing interests in applying code-division-multiple-access (CDMA) techniques to a cellular wireless network. Unlike the narrowband system, users in a CDMA system share the same frequency all the time by using a specific spread spectrum pseudonoise code for each user. The system performance mainly depends on the so-called multiple access interference (MAI), which is caused by the cross-correlations between the desired signal and other signals.

There is work along the line of power control schemes for narrowband systems. Wu, in [22], extended Zander's problem formulation in [2]-[4] to CDMA systems by reordering the number of users in different cells.

Open-loop power control is employed to combat the path loss and shadow fading. The average power control in [18],[37] keeps the local mean received power to a constant value, which mitigate the effect of shadowing and near-far problems. In IS-95B [35] and CDMA2000 [36], fast closed-loop power control is proposed to fight medium to fast

Reproduced with permission of the copyright owner. Further reproduction prohibited without permission.

fading. In [20-21], it is shown that when power control rate is higher, it can partially accomodate the effect of fast fading.

Herdtner and Chong [17] considered a simple distributed power control scheme in which the convergence condition was given. Song et.al. [26]-[27] and Gunnarsson et.al. [28]-[29] considered up/down power control and closed-loop power control with other nonlinear elements within the framework of nonlinear control systems. [26]-[27] give guidelines for choosing the appropriate power control step size in IS-95. In [28]-[29], PID controllers were designed to overcome the effect of time-delay in the feedback loop.

The effect of imperfect power control in CDMA systems was considered in [56]-[58]. Priscoli models interference as Gaussian [56], and use simulation to deal with log-normal sums. Cameron and Woerner [57] derived performance bounds considering intracell interference only. Corazza et.al.[58] invokes the "causal central limit theorem" to handle intercell interference.

1.3 Convergence Properties of Distributed Power Control Algorithms

Power control schemes can be centralized [2]-[4] or distributed [3],[5],[7]. A centralized controller has information (e.g., all the link gains) for each user and it decides control actions for all the users. On the other hand, a distributed controller only uses local information to make a control decision for a user. For example, [3],[5],[7] only use a user's own link gain and/or CIR/SIR to make a decision about its power.

The algorithm convergence has to be studied carefully when a distributed power control scheme is used. The distributed power control algorithm by Foschini [7] was shown to converge either synchronously [7] or asynchronously [9]. The basic model in [7] is relaxed in [9] to allow asynchronism. A propagation delay is also considered in [9]. A framework for convergence of the generalized uplink power control was proposed by Yates [10].

Reproduced with permission of the copyright owner. Further reproduction prohibited without permission.

1.4 Supporting Voice/Data Users Simultaneously in 3G Wireless Networks

Mitra and Morrison [13] extended the basic model of [9] by allowing users to transmit information in a bursty fashion, rather than at a fixed rate. This is a reasonable model for data users. In [13], users are immobile, but interference levels fluctuate due to burstiness. The power adaptation algorithm is adjusted by including a measurement of the variance of the interference. It converges to a solution at which users obtain their desired SIRs most of the time.

A CDMA personal communication system (PCS) with intergrated voice/data traffic was considered in [24]. Optimum power allocation between voice and data users was investigated to maximize the total system throughput. A graphical method called the tangent method was applied to obtain the optimum power allocation.

Joint power and rate control was introduced to wireless data services in [52],[54]. Feng et.al. in [52] did joint power and rate control by optimizing utility functions using game theory. Oh et.al. in [54] proposed a distributed power control and spreading gain allocation scheme which achieves near-maximum throughput, subject to peak power constraints.

1.5 Capacity Improvement through Combined Techniques

There are many ways to improve system capacity through combined techniques. Foschini and Miljanic [8], Yates and Huang [11], and Hanly [15] proposed a combined base station assignment and power control technique. Instead of using fixed channel allocation, a dynamic channel allocation scheme is employed together with power control to get a better performance. F.Rashid-Farrokhi et.al. [25] applied joint power control and beamforming in wireless network to get an additional gain from space diversity.

Reproduced with permission of the copyright owner. Further reproduction prohibited without permission.

1.6 Estimation Based Power Control

The kalman filter method for power control is proposed for broadband packet-switched TDMA wireless networks [30, 65-67]. By exploiting the temporal correlation of cochannel interference, the Kalman filter is used to predict future interference power. Based on the predicted interference and estimated path gain between the transmitter and receiver, the transmission power is decided to achieve the target SIR.

The dynamics of the interference power is described by (using the same notation as in [30])

$$I_n = I_{n-1} + F_n \tag{1.11}$$

where I_n is the interference power in dBm received in time slot n, F_n represents the fluctuation of interference power in time slot n. Let Z_n be the measured interference power in time slot n. Then,

$$Z_n = I_n + E_n \tag{1.12}$$

where E_n is measurement noise. In special cases when thermal noise is negligible and the interference fluctuation is dominated by shadow fading, which is known to have log-normal distribution, the interference disturbance in dBm is Gaussian. However, it is not normally distributed in general. The Kalman filter offers optimal filtering algorithm when the system model parameters are known and the noise is white Gaussian noise processes with known statistics. The Kalman filter proposed in [30] is

$$\hat{I}_n = \hat{I}_{n-1} + K_n(Z_n - \hat{I}_{n-1}) \tag{1.13}$$

where $\hat{I}_n$ is the estimate of I_n, K_n is the Kalman filter gain. The computation of K_n requires the knowledge of the variances of F_n and E_n. In contrast to the Kalman filter, the H_∞ filter is robust with respect to the fluctuation of interference power. The details can be found in Section 2.5.

In [51], a linear prediction of received power is made at the base station to predict the power control bit one step ahead. This approach also assumes that the interference is Gaussian.

Reproduced with permission of the copyright owner. Further reproduction prohibited without permission.

1.7 Stochastic Power Control

There has not much work been done on stochastic power control. A stochastic power control algorithm is reported by Ulukus and Yates [39], where stochastic measurements of the matched filter output are assumed. The randomness is due to the randomness of the information bits transmitted by users. The authors suggest a windowed approach to get measurements of the matched filter outputs and take the average. Both fixed step size and varying step size algorithms are proved to converge in the sense that they minimize the mean squared error between the power vector and the solution of the corresponding deterministic power control problem. This work assumes that the link gains are time invariant.

1.8 Power Control using Game Theory

There have been increasing interests recently to apply game theory to the power control problem in wireless networks [77-81]. In these models, the user preferences have been mapped to the utility functions measured by the energy efficiency. The energy efficiency is defined as the average amount of correctly transmitted data bits per unit of battery energy. Game theory has been applied to maximize user's utility function. Noncooperative games have been formulated to solve the distributed power control problem. The game settles at the Nash equilibrium if the problem is feasible.

1.9 Motivation of the Research Work

Wideband CDMA has been selected as the access technology for the next generation wireless communication systems [61-62]. Consequently, it has received a significant amount of attention in provision of advanced algorithms for improved performance. Accurate power control is one of the most important requirements of CDMA systems. The CDMA technology used in the third generation wireless systems relies on accurate power control, not only for maintaining signal quality and maximizing the battery life of mobile terminals, but also as an important means of optimizing system capacity by controlling interference [61-62]. In addition, if there exists a constant power control

Reproduced with permission of the copyright owner. Further reproduction prohibited without permission.

error, which is the case in the current IS-95 system, other techniques, such as the interleaving, will not work properly [20-21].

Due to the unreliable radio links, it is challenging to ensure QoS in terms of frame error rate (FER), in turn, to achieve the desired SIR at all time in wireless networks. Since 3-G wireless systems introduce high data rate (multimedia) services, it requires more accurate and fast responding power control. For real-time services such as IP voice and video, stringent delay requirements severely limit or even preclude retransmission of lost frames. Hence, tight delay requirements translate to stringent requirements for SIR. As a result, in order to support real-time services, it is important to design accurate and fast responding power control algorithms such that the required QoS can be delivered to the users. The channel conditions keep changing from time to time in a wireless system. Consequently, the received signal power and interference will change from time to time. It is important to get accurate real-time estimates of the channel quality. In the 3-G wireless systems, this has been done by measuring the SIR at the base station. It is also important to obtain accurate real-time estimates of the channel quality in terms of interference. Some results using the Kalman filter can be found in [30,65-67]. In this research work, a H_∞ filter is proposed to provide accurate estimations/predictions of channel variations. H_∞ filter minimize the H_∞-norm of the transfer function from the disturbances to the system output. This worst case optimizer gives better performance than the Kalman filter in terms of robustness. It will easily adapt to constantly changing and noisy environment, which is the situation in wireless channels.

It is well known that the power control problem in the uplink (mobile-to-base) is more challenging than the power control problem in the downlink (base-to-mobile). Hence, we only consider the uplink power control problem in CDMA systems in this dissertation. The proposed algorithms can easily migrate to the downlink.

In this dissertation, we restrict our interest to the optimal power control algorithms in the CDMA systems. Combined techniques, for example, combined rate and power control [52-55], is out of the scope of this dissertation.

Reproduced with permission of the copyright owner. Further reproduction prohibited without permission.

1.10 Outline of the Dissertation

In this research work, the problem of optimal SIR-based power control in cellular wireless systems is considered. CDMA technology used in 3-G wireless systems relies on accurate power control, not only for maximizing the battery life of mobile terminals, but also as an important technique for maintaining users' Quality-of-Service(QoS) and optimizing system capacity by controlling interference.

In Chapter 1, we briefly review the previous results of SIR-based power control in cellular wireless systems. We realize that almost all existing distributed power control schemes are either iterative algorithms or heuristic up/down schemes. In most cases, a long time is needed for convergence to steady state. Such algorithms no longer fit the needs in the proposed 3-G wireless standards (IMT-2000) for more advanced services. New power control schemes are indispensable.

An optimal distributed closed-loop SIR-based power control scheme is proposed in Chapter 2 to minimize the squared error between the actual SIR and the desired SIR. The performance criterion is the squared error between the desired SIR and the real value of SIR. The constraints are imposed on the maximum and minimum values of the transmitter power. By applying the Kuhn-Tucker conditions, we derive the optimal gain of the proportional controller. Using Bellman's optimality principle, our power control scheme achieves optimality in the whole time interval by applying it at each time step. The essence of this power control algorithm is that the power evolution is directly driven by the SIR error. The amount of power change is proportional to the error, and the gain is chosen to achieve the minimum SIR error at the next time instant. Assuming perfect estimation and prediction, the error between the desired SIR and the real value of SIR goes to zero in one step. In practical situation, the estimator needs several steps to make accurate estimation and prediction, the SIR error goes to zero in less than ten steps.

The proposed controller is an estimator based controller. An H_∞ filter is applied in the proposed scheme instead of the Kalman filter to facilitate the system filtering regardless of nature of the system and measurement disturbances. A joint optimization of

Reproduced with permission of the copyright owner. Further reproduction prohibited without permission.

mobile's transmission power and SIR error is also proposed to provide tradeoff between the provided QoS and the power consumption. The simulation results of a multi-cell CDMA system in all cases fit theoretical analysis very well. Firstly, the performance of the proposed algorithm is tested under constant channel gain. In other words, the channel gains do not change during power control. Secondly, the same algorithm with the same parameters is tested under fading channel, where channel gains change at each PCG. The first case is the deterministic case which has been analyzed theoretically and has been proved to achieve the minimal SIR error. The user's SIR will converge to the target SIR value whenever the wireless channel is nominal. The H_∞ filter is applied to provide accurate estimates of the channel quality, and at the same time, to combat disturbances due to the fluctuations of interferences from the other users. The second case demonstrates the effectiveness of the proposed scheme under fading channels. Since the H_∞ filter is a robust (minimax) filter, and it does not require any statistical property about disturbances, the proposed scheme can easily adapt to the varying channel gains due to fading.

Theoretical analysis and proof of convergence are very difficult when stochastic nature of the power control system is fully considered. The channel gains, received power and interference at the base station are all stochastic processes. A special case is analyzed theoretically in Chapter 3 where only the stochastic SIR measurements are taken into consideration.

Since obtaining fast and accurate SIR estimates in real-time may be difficult, a stochastic optimal power control algorithm is proposed in Chapter 3 which uses the SIR measurements directly, assuming that the SIR measurements are contaminated by white noise.

The SIR measurement module at the base station provides SIR measurements by taking the ratio between the instantaneous received signal power and the average interference plus noise power. Both pilot and data symbols are used to measure instantaneous received signal power. Only the pilot symbols are used to measure instantaneous interference plus noise power, which is followed by averaging using a first-order filter [61],[72]. The instantaneous received signal power is assumed to contain white noise,

Reproduced with permission of the copyright owner. Further reproduction prohibited without permission.

while the average interference plus noise power is assumed to be fixed during one PCG because the forgetting factor used in the low-pass filter is very close to one. Hence, the SIR measurements are assumed to contain white noise.

The transmission power and SIR error are chosen to be the state space variables of the power control system. Using the proportional control law as we proposed in Chapter 2, the power control system is a linear time-varying system driven by white noise. The optimal controller gain is obtained by minimization of the sum of the variances of mobile's transmission power and SIR error. The mean and variance of the transmission power and SIR error under optimal control are derived. In our formulation, an estimator is proposed to deal with changes of the link gains. It estimates the channel quality in terms of channel variation at each Power Control Group (PCG) in real-time. The users' SIR converge to the target value within 40 steps. A Proportional Derivative (PD) controller is added to the proposed power control scheme in order to decrease the overshoot and improve the transient response. Applying quantization on the proposed optimal power control command, we get a multi-step-like power control algorithm. Simulation results show that the performance of the proposed control scheme will not be affected much with quantization.

Chapter 4 provide some preliminary analytical results on game theoretical approaches to solve the power control problem for mobile users in both noncooperative and cooperative manner. A Nash equilibrium point for an arbitrary number of users is obtained by solving the distributed power control problem as a noncooperative game. The solution obtained from this noncooperative game proves that the distributed power control algorithm proposed in Chapter 2 achieves the Nash equilibrium. A Pareto game is formulated assuming that all the users will cooperate and try to achieve the global optimum. The Pareto solution of a 2-user case is obtained. An alternative performance objective may be chosen to avoid the difficulty of solving the multi-user Pareto game.

Chapter 5 contains concluding remarks and suggestions of future research topics.

Reproduced with permission of the copyright owner. Further reproduction prohibited without permission.

Chapter 2

Optimal Closed-Loop SIR-based Distributed Power Control using H_∞ Filter - Deterministic Case

In this chapter, a SIR-based distributed power control scheme is introduced using the optimal control theory to get the optimum performance in the uplink in a CDMA system.

The transmit power control process at the base station in a 3-G wireless system based on DS-CDMA technology is shown in Figure 2.1. Based on the received signal, the outer loop detects the Frame Error Rate (FER). Then the outer loop control maps the Frame Error Rate (FER) to the target SIR value. The inner loop control decides the transmitter power by comparing the measurement of the SIR with its target value. The outer loop runs on a long time scale (a frame, 10ms), while the inner loop runs on a small time scale (a slot, 0.625ms). The proposed optimal power control scheme will be applied at the inner loop control.

2.1 Optimal SIR-based Distributed Power Control by Unconstrained Optimization

Suppose that there are N active users in the system. We restate the definition of Signal-to-Interference Ratio (SIR) for spread spectrum (DS-CDMA) wireless systems.

Definition 1 *The SIR of an active link from mobile station i to base station n in a wireless system is defined as*

$$\gamma_{ni} = \frac{L h_{ni} p_i}{\sum_{j \neq i} h_{nj} p_j + \sigma^2} \tag{2.1}$$

where h_{ni} is the link gain from mobile station i to base station n. We assume that L is the processing gain in spread spectrum wireless systems, e.g., in CDMA 2000, L=64 or

Reproduced with permission of the copyright owner. Further reproduction prohibited without permission.

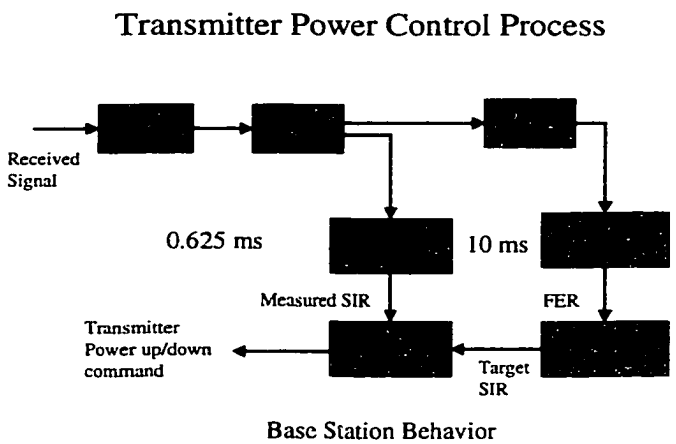

Figure 2.1: Base station behavior in 3-G wireless systems

128 or 256. Let us denote the denominator by I_{ni}, which is the received interference, then the SIR can be rewritten as

$$\gamma_{ni} = \frac{Lh_{ni}p_i}{I_{ni}} \tag{2.2}$$

Assuming that a mobile only transmits to one base station during the time of power control, then γ_{ni} can be simplified as γ_i. Let $\delta_i = \frac{Lh_{ni}}{I_{ni}}$ define the channel variation [20], which have to be estimated and predicted in the proposed power control scheme.

Given that a mobile station and its base station communicate directly with each other, we assume that h_{ni} can be estimated accurately. We also assume that the received interference I_{ni} can be measured at each time step. The received interference is the difference between the total received power and the desired signal power [10].

The main idea of the proposed algorithm is to make the transmission power proportional to the error between the actual SIR and the desired SIR. Define the transmission power change from time step k to $k+1$ as

$$\Delta p_i(k+1) = p_i(k+1) - p_i(k) \tag{2.3}$$

where $p_i(k)$ and $p_i(k+1)$ are the transmission powers from mobile i to the base station at time instants k and $k+1$, respectively. Let the error between the actual SIR ($\gamma_i(k)$)

Reproduced with permission of the copyright owner. Further reproduction prohibited without permission.

and the desired SIR (γ_i^{tar}) be denoted by $e_i(k)$ for mobile i at time instant k. The error is defined by

$$e_i(k) = \gamma_i^{tar} - \gamma_i(k) \tag{2.4}$$

We propose the following power control algorithm

$$\Delta p_i(k+1) = \alpha_i(k)e_i(k) \Longrightarrow p_i(k+1) = p_i(k) + \alpha_i(k)(\gamma_i^{tar} - \gamma_i(k)) \tag{2.5}$$

where $\alpha_i(k)$ is the gain to be determined through the optimization procedure in which the square of the SIR error is minimized (theoretically reduced to zero in each discrete-time instant k). The main result of this chapter is presented in the following theorem.

Theorem 1 *Define the performance criteria at time instant k as*

$$J_i(k) = \min_{\alpha_i(k)}(e_i(k+1))^2 \ , \quad i = 1, 2, ..., N. \tag{2.6}$$

The optimal gains of the power control algorithm (2.5) that minimize $J_i(k)$ at every time instant k are

$$\alpha_i^{opt}(k) = \begin{cases} \frac{1}{\delta_i(k)}(1 - \frac{\gamma_i^{tar}}{e_i(k)}) + \frac{1}{\delta_i(k+1)}\frac{\gamma_i^{tar}}{e_i(k)} & if \quad e_i(k) \neq 0 \\ 0 & if \quad e_i(k) = 0 \end{cases} \tag{2.7}$$

where

$$\delta_i(k) = \frac{Lh_{ni}(k)}{I_{ni}(k)} > 0$$

$$\delta_i(k+1) = \frac{Lh_{ni}(k+1)}{I_{ni}(k+1)} > 0$$

and $h_{ni}(k), h_{ni}(k+1), I_{ni}(k), I_{ni}(k+1) > 0 \ \forall k$. The minimal value of the performance criterion is zero when the optimal gain $\alpha_i^{opt}(k)$ is applied.

Proof: Firstly, we derive the error dynamic equation using (2.1)-(2.5)

$$\begin{aligned} e_i(k+1) &= \gamma_i^{tar} - \gamma_i(k+1) \\ &= \gamma_i^{tar} - \delta_i(k+1)p_i(k+1) \\ &= \gamma_i^{tar} - \delta_i(k+1)(p_i(k) + \alpha_i(k)e_i(k)) \\ &= \gamma_i^{tar} - \delta_i(k+1)(\frac{\gamma_i(k)}{\delta_i(k)} + \alpha_i(k)e_i(k)) \\ &= \gamma_i^{tar} - \delta_i(k+1)(\frac{\gamma_i^{tar} - e_i(k)}{\delta_i(k)} + \alpha_i(k)e_i(k)) \\ &= (-\delta_i(k+1)\alpha_i(k) + \frac{\delta_i(k+1)}{\delta_i(k)})e_i(k) + (1 - \frac{\delta_i(k+1)}{\delta_i(k)})\gamma_i^{tar} \end{aligned} \tag{2.8}$$

Reproduced with permission of the copyright owner. Further reproduction prohibited without permission.

Secondly, we compute the square of the error

$$\begin{aligned}(e_i(k+1))^2 &= (-\delta_i(k+1)\alpha_i(k) + \frac{\delta_i(k+1)}{\delta_i(k)})^2(e_i(k))^2 \\ &+ (1-\frac{\delta_i(k+1)}{\delta_i(k)})^2(\gamma_i^{tar})^2 + 2(-\delta_i(k+1)\alpha_i(k) + \frac{\delta_i(k+1)}{\delta_i(k)}) \\ & e_i(k)(1-\frac{\delta_i(k+1)}{\delta_i(k)})\gamma_i^{tar} \end{aligned} \tag{2.9}$$

From the necessary conditions for optimality at time instant k

$$\frac{\partial J_i(k)}{\partial \alpha_i(k)} = \frac{\partial (e_i(k+1))^2}{\partial \alpha_i(k)} = 0 \tag{2.10}$$

we have

$$\alpha_i^{opt}(k) = \frac{1}{\delta_i(k)}(1-\frac{\gamma_i^{tar}}{e_i(k)}) + \frac{1}{\delta_i(k+1)}\frac{\gamma_i^{tar}}{e_i(k)} \tag{2.11}$$

Taking the second derivative we obtain

$$\frac{\partial^2 J_i(k)}{\partial \alpha_i^2(k)} = 2(\delta_i(k+1)e_i(k))^2 > 0 \tag{2.12}$$

which indicates that the resulting $J_i(k)$ by using $\alpha_i^{opt}(k)$ are at minimum and establishes the sufficient part of the theorem. Using Bellman's optimality principle [46], we achieve optimality in the whole power control duration by applying this power control algorithm at each time step. In other words, choices of controller gains in (2.7) are optimal for all k. ■

In 3-G wireless systems, e.g., CDMA-2000, UMTS, stringent SIR level has to be maintained at every moment, in order to guarantee the users' QoS. Hence, the squared SIR error has been selected as the performance criterion. If $e > 0$, then the SIR is below the target, required QoS is not achieved. On the other hand, if $e < 0$, then the SIR is above the target. However, in this case the mobile produces too much interference to other mobile users and spends unnecessary power.

The block diagram of the proposed distributed power control algorithm is shown in Figure 2.2. The state-of-the-art of this power control algorithm is that the power evolution is directly driven by the error between SIR and the desired SIR. The amount of power change is proportional to the error, and the gain is chosen to achieve the minimum error at the next time instant.

Reproduced with permission of the copyright owner. Further reproduction prohibited without permission.

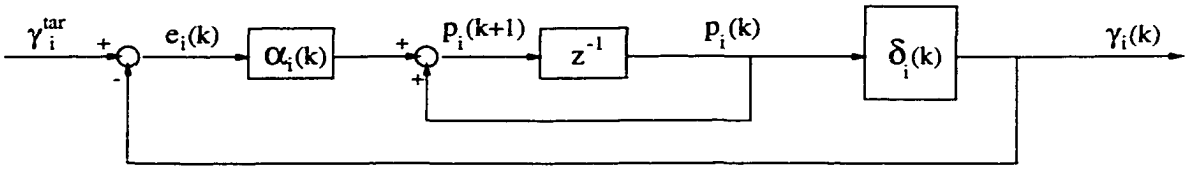

Figure 2.2: Optimal SIR-based distributed power control of cellular wireless systems

An important assumption behind all the power adaptation algorithms reviewed in Chapter 1, is that power updates occur so quickly that the link gains can be assumed to be fixed. Our power control algorithm is *not* an iterative algorithm. The assumption that the link gains do not change during power evolution is *not* required in the proposed algorithm. On the other hand, the proposed power control algorithm is suitable for such purpose due to the immediate decision of the optimal power allocation of the next time step based on measurements and predictions. With a good estimator (for example, H_∞ filter), the channel quality is obtained in terms of channel variation. The error between the actual SIR and the desired SIR is driven to zero at every power control step.

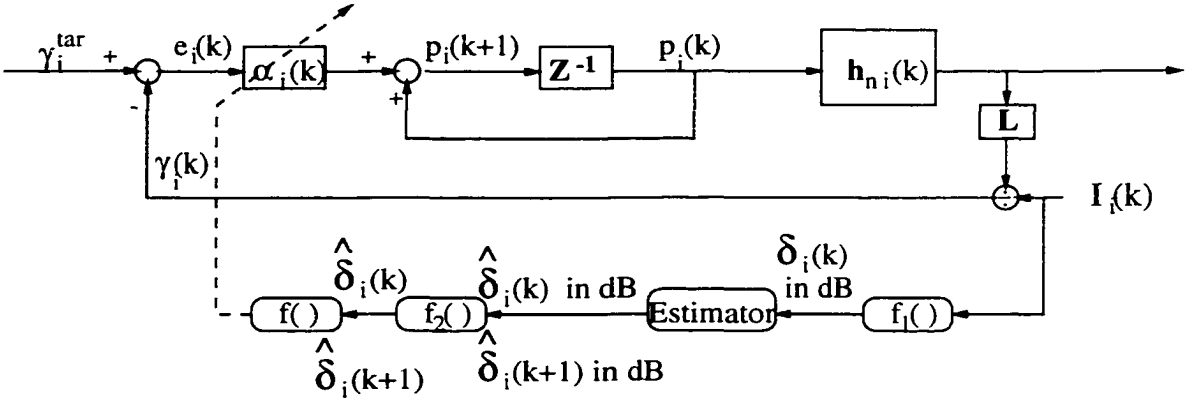

Figure 2.3: The optimal distributed power control system with an estimator

The block diagram of the proposed power control scheme with an estimator is shown in Figure 2.3, where $f()$ is defined as

$$f(x_1, x_2) = \begin{cases} \frac{1}{x_1}(1 - \frac{\gamma_i^{tar}}{e_i(k)}) + \frac{1}{x_2}\frac{\gamma_i^{tar}}{e_i(k)} & if \quad e_i(k) \neq 0 \\ 0 & if \quad e_i(k) = 0 \end{cases} \tag{2.13}$$

$f_1(x) = 10log_{10}(x)$ and $f_2(x) = 10^{(x)/10}$ are converting functions between W and dBW.

It is noticeable that the proposed controller is an estimator based controller. The idea of quick online estimation of link quality was mentioned in [33]. It pointed out

Reproduced with permission of the copyright owner. Further reproduction prohibited without permission.

that any adaptive power control scheme needs a quick detection of the change of link quality. The performance of the estimator will have direct impact on the performance of the power control scheme. Let $\hat{\delta}_i(k)$ and $\hat{\delta}_i(k+1)$ denote the estimated/predicted value of $\delta_i(k)$ and $\delta_i(k+1)$, respectively. Then the gain applied to the power control algorithm is

$$\hat{\alpha}_i(k) = \begin{cases} \frac{1}{\hat{\delta}_i(k)}(1 - \frac{\gamma_i^{tar}}{e_i(k)}) + \frac{1}{\hat{\delta}_i(k+1)}\frac{\gamma_i^{tar}}{e_i(k)} & if \quad e_i(k) \neq 0 \\ 0 & if \quad e_i(k) = 0 \end{cases} \tag{2.14}$$

The error between the actual SIR and the desired SIR at the next time instant $k+1$ is

$$\begin{aligned} e_i(k+1) &= \delta_i(k+1)[(\frac{1}{\delta_i(k)} - \frac{1}{\hat{\delta}_i(k)})(e_i(k) - \gamma_i^{tar}) \\ &\quad +(\frac{1}{\delta_i(k+1)} - \frac{1}{\hat{\delta}_i(k+1)})\gamma_i^{tar}] \\ &= p_i(k+1)(\hat{\delta}_i(k+1) - \delta_i(k+1)) \end{aligned} \tag{2.15}$$

It is obvious that if the estimated/predicted value of $\delta_i(k)$ and $\delta_i(k+1)$ are close to the real values, then $e_i(k+1) \approx 0$. The power evolution is given by

$$p_i(k+1) = p_i(k) + \hat{\alpha}_i(k)e_i(k) = \frac{\gamma_i^{tar}}{\hat{\delta}_i(k+1)} \tag{2.16}$$

The block diagram of the complete power control system composed of N links with estimators is shown in Figure 2.4, where the effect of the correlation in the received power from interfering users is taken into account.

2.2 Optimal SIR-based Distributed Power Control by Constrained Optimization

In the previous section, we have performed unconstrained optimization to get the optimal gain for the controller. However, in real wireless systems, there are always constraints on the power that the mobile can transmit, namely, the highest transmitted power allowed and the lowest transmitted power to maintain connections. In this section, we will derive the optimal gain of our controller by taking these constraints into account and perform constrained optimization.

Reproduced with permission of the copyright owner. Further reproduction prohibited without permission.

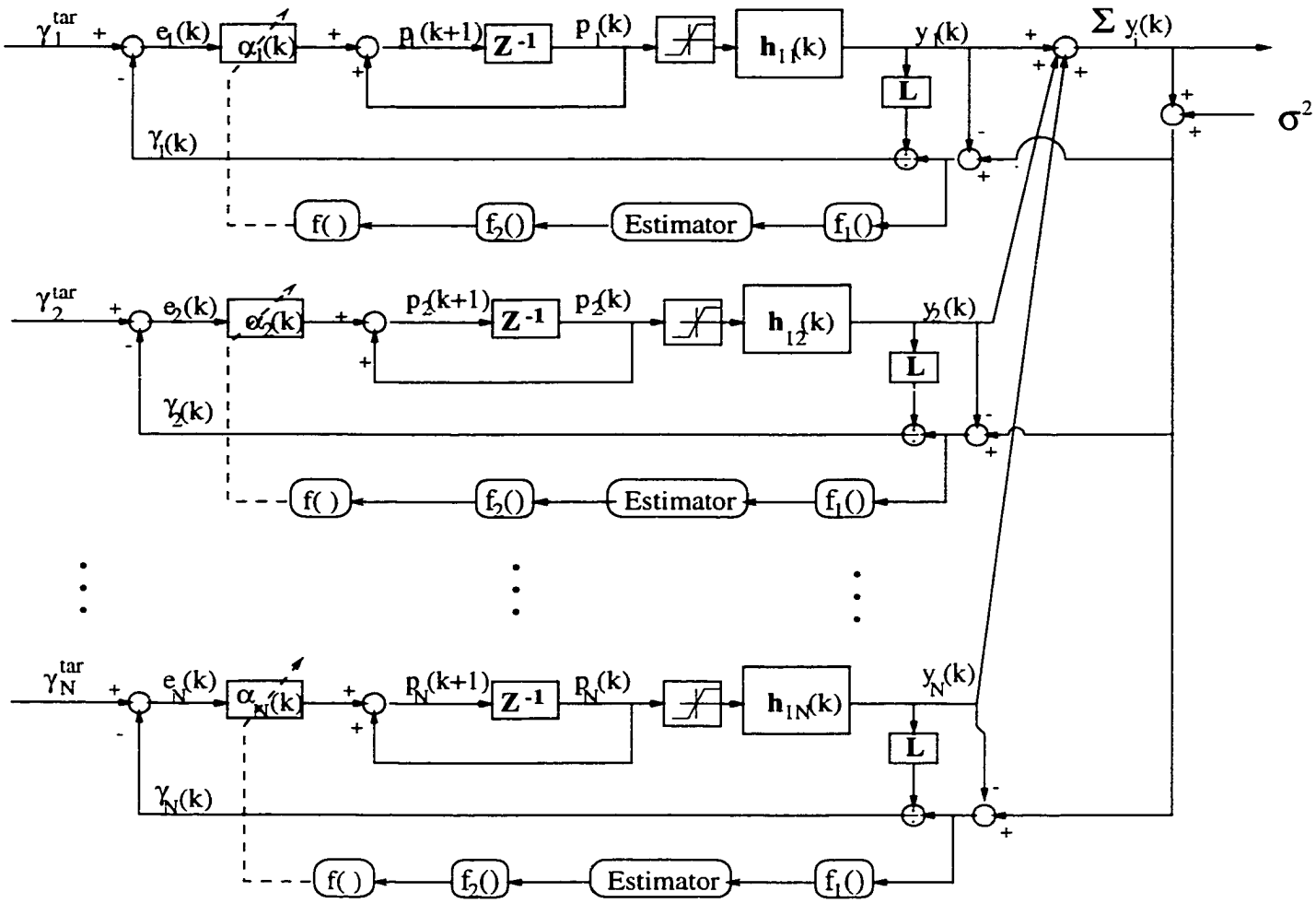

Figure 2.4: The complete optimal distributed power control system with estimators (N links)

Reproduced with permission of the copyright owner. Further reproduction prohibited without permission.

Suppose that the highest transmitted power allowed is p^{max} and that the lowest transmitted power allowed is p^{min}. We formulate the following constrained optimization problem

$$J_i(k) = \min_{\alpha_i(k)} (e_i(k+1))^2 \tag{2.17}$$

subject to

$$0 < p^{min} \leq p_i(k) \ , \ p_i(k+1) \leq p^{max} \tag{2.18}$$

This problem is equivalent to

$$J_i(k) = \min_{\alpha_i(k)} (e_i(k+1))^2 \tag{2.19}$$

subject to (if $e_i(k) > 0$)

$$\alpha_i(k) - \frac{p^{max} - p_i(k)}{e_i(k)} \leq 0 \tag{2.20}$$

$$\frac{p^{min} - p_i(k)}{e_i(k)} - \alpha_i(k) \leq 0 \tag{2.21}$$

and subject to (if $e_i(k) < 0$)

$$\alpha_i(k) - \frac{p^{min} - p_i(k)}{e_i(k)} \leq 0 \tag{2.22}$$

$$\frac{p^{max} - p_i(k)}{e_i(k)} - \alpha_i(k) \leq 0 \tag{2.23}$$

First we solve the case when $e_i(k) > 0$. We solve this nonlinear programming problem by the well-known Kuhn-Tucker condition [45].

Introduce two scalars $u_1 \geq 0$ and $u_2 \geq 0$, the conditions for optimality are (when $e_i(k) > 0$)

$$\frac{\partial J_i(k)}{\partial \alpha_i(k)} + u_1 \frac{\partial(\alpha_i(k) - \frac{p^{max} - p_i(k)}{e_i(k)})}{\partial \alpha_i(k)} + u_2 \frac{\partial(\frac{p^{min} - p_i(k)}{e_i(k)} - \alpha_i(k))}{\partial \alpha_i(k)} = 0 \tag{2.24}$$

$$u_1(\alpha_i(k) - \frac{p^{max} - p_i(k)}{e_i(k)}) = 0 \tag{2.25}$$

$$u_2(\frac{p^{min} - p_i(k)}{e_i(k)} - \alpha_i(k)) = 0 \tag{2.26}$$

We solve the above equations for four different cases.

Case 1. $u_1 > 0$ and $u_2 > 0$ This case produces no solution.

Reproduced with permission of the copyright owner. Further reproduction prohibited without permission.

Case 2. $u_1 = 0$ and $u_2 > 0$

$$\alpha_i(k) = \frac{p^{min} - p_i(k)}{e_i(k)} \tag{2.27}$$

solving for u_2, we obtain

$$u_2 = 2\delta_i(k+1)e_i(k)[\delta_i(k+1)(p^{min} - p_i(k)) - \frac{\delta_i(k+1)}{\delta_i(k)}e_i(k) - (1 - \frac{\delta_i(k+1)}{\delta_i(k)})\gamma_i^{tar}] \tag{2.28}$$

In order that $u_2 > 0$, we have

$$\delta_i(k+1)p^{min} > \gamma_i^{tar} \tag{2.29}$$

Case 3. $u_2 = 0$ and $u_1 > 0$

$$\alpha_i(k) = \frac{p^{max} - p_i(k)}{e_i(k)} \tag{2.30}$$

solving for u_1, we obtain

$$\begin{aligned} u_1 &= 2\delta_i(k+1)e_i(k)[-\delta_i(k+1)(p^{max} - p_i(k)) + \frac{\delta_i(k+1)}{\delta_i(k)}e_i(k) \\ &\quad +(1 - \frac{\delta_i(k+1)}{\delta_i(k)})\gamma_i^{tar}] \end{aligned} \tag{2.31}$$

In order that $u_1 > 0$, we have

$$\delta_i(k+1)p^{max} < \gamma_i^{tar} \tag{2.32}$$

Case 4. $u_1 = 0$ and $u_2 = 0$

This case corresponds to the unconstrained optimization problem that we have solved in the last section. There exists a unique solution as stated in Theorem 1.

Secondly, we solve the case when $e_i(k) < 0$. The conditions for optimality are (when $e_i(k) < 0$)

$$\frac{\partial J_i(k)}{\partial \alpha_i(k)} + u_1 \frac{\partial(\alpha_i(k) - \frac{p^{min} - p_i(k)}{e_i(k)})}{\partial \alpha_i(k)} + u_2 \frac{\partial(\frac{p^{max} - p_i(k)}{e_i(k)} - \alpha_i(k))}{\partial \alpha_i(k)} = 0 \tag{2.33}$$

$$u_1(\alpha_i(k) - \frac{p^{min} - p_i(k)}{e_i(k)}) = 0 \tag{2.34}$$

$$u_2(\frac{p^{max} - p_i(k)}{e_i(k)} - \alpha_i(k)) = 0 \tag{2.35}$$

We have to solve the above equations for four different cases.

Case 1. $u_1 > 0$ and $u_2 > 0$ This case has no solution.

Reproduced with permission of the copyright owner. Further reproduction prohibited without permission.

Case 2. $u_1 = 0$ and $u_2 > 0$

$$\alpha_i(k) = \frac{p^{max} - p_i(k)}{e_i(k)} \tag{2.36}$$

solving for u_2, we obtain

$$u_2 = 2\delta_i(k+1)e_i(k)[\delta_i(k+1)(p^{max} - p_i(k)) - \frac{\delta_i(k+1)}{\delta_i(k)}e_i(k) - (1 - \frac{\delta_i(k+1)}{\delta_i(k)})\gamma_i^{tar}] \tag{2.37}$$

In order that $u_2 > 0$, we have

$$\delta_i(k+1)p^{max} < \gamma_i^{tar} \tag{2.38}$$

Case 3. $u_2 = 0$ and $u_1 > 0$

$$\alpha_i(k) = \frac{p^{min} - p_i(k)}{e_i(k)} \tag{2.39}$$

Solving for u_1 we have

$$u_1 = 2\delta_i(k+1)e_i(k)[-\delta_i(k+1)(p^{min} - p_i(k)) + \frac{\delta_i(k+1)}{\delta_i(k)}e_i(k) + (1 - \frac{\delta_i(k+1)}{\delta_i(k)})\gamma_i^{tar}] \tag{2.40}$$

In order that $u_1 > 0$, we have

$$\delta_i(k+1)p^{min} > \gamma_i^{tar} \tag{2.41}$$

Case 4. $u_1 = 0$ and $u_2 = 0$

This case corresponds to the unconstrained optimization problem we have solved in the last section. There exists a unique solution as stated in Theorem 1.

Based on the above discussion, we draw the following conclusion: Under normal operations, optimal power allocation hardly hit the lower/upper bound. They can only happen under extreme conditions, namely, when the desired SIR is set too low $\delta_i(k+1)p^{min} > \gamma_i^{tar}$ or too high $\delta_i(k+1)p^{max} < \gamma_i^{tar}$. These extreme conditions can happen in the proposed power control scheme when γ_i^{tar} is not set properly and/or when measurements and/or predictions are far from the real values. These extreme conditions provide a mean to evaluate the quality of the H_∞ filter (or any other estimator used) when γ_i^{tar} is set properly. It can be stated as

if $\hat{\delta}_i(k+1) < \frac{\gamma_i^{tar}}{p^{max}}$, then the estimations are bad;

Reproduced with permission of the copyright owner. Further reproduction prohibited without permission.

if $\hat{\delta}_i(k+1) > \frac{\gamma_i^{tar}}{p^{min}}$, then the predictions are bad.

However, we should keep in mind that the performance of the H_∞ filter does not depend on the value of γ^{tar}. It mainly depends on the choice of the optimization parameters of the H_∞ filter.

Based on the above discussions, the modified power control algorithm, which will be verified in simulations and can be implemented in existing wireless systems, is proposed as follows:

$$p_i(k+1) = \begin{cases} p^{min} & if \quad \hat{\delta}_i(k+1) > \frac{\gamma_i^{tar}}{p^{min}} \\ p^{max} & if \quad \hat{\delta}_i(k+1) < \frac{\gamma_i^{tar}}{p^{max}} \\ p_i(k) + \hat{\alpha}_i(k)e_i(k) = \frac{\gamma_i^{tar}}{\hat{\delta}_i(k+1)} & o.w. \end{cases} \tag{2.42}$$

where $\hat{\alpha}_i(k)$ was defined in (2.14). (2.42) is consistent with Pontriagin's minimum principle which stated that in constrained optimization, optimal solutions lie on the boundary [46].

The issue of link protection was raised in [33] by Bambos. The main idea is to protect active users from being dropped. It is possible that the transmitted powers may change erratically in the transient phase before the estimators converge. The link SIRs could dive below the minimum allowable SIR (γ_{min}) during power evolution. We characterize the link protection problem as

$$\gamma_i(k) > \gamma_{min} \ \ \forall\, k \tag{2.43}$$

A simple solution of the link protection problem is suggested below. At each time step k

Step 1. Suppose that the minimum $\delta_i(k)$ for all i is $\delta_{min}(k)$ (the worst channel). Compute the new lower bound on transmitter power

$$p^{min,new} = \frac{\gamma_{min}}{\delta_{min}(k)} \tag{2.44}$$

Step 2. Use $p^{min,new}$ instead of p^{min} in (2.42).

Note again $\delta_i(k)$ have to be estimated. When the estimation errors are present, the above algorithm may not work properly. An alternative is to add γ_{min} to the desired

Reproduced with permission of the copyright owner. Further reproduction prohibited without permission.

SIR.

$$\gamma^{tar,new} = \gamma^{tar} + \gamma_{min} \tag{2.45}$$

And use $\gamma^{tar,new}$ as the desired SIR in the proposed power control scheme. The link protection scheme described above may increase power consumption and cause more interference in the system.

In order to compute $\hat{\alpha}_i(k)$, we need a 'good' estimator/predictor. The H_∞ filter is a very promissing candidate. We will discuss this issue in Section 2.4.

2.3 Joint Minimization of SIR Error and Mobile Transmission Power

In the last two sections, we solved the optimal distributed power control problem by minimizing the square of the error between the SIR target and the actual value. In all wireless systems, it is desirable that all mobiles transmit with small power as long as they maintain required service quality measured by the SIR. When the channel quality of some mobile user, say user i, becomes poor, mobile user i will raise its transmission power to reach the desired SIR. Since it introduces more interference to the system, others will raise their transmission power to maintain their target SIR. In a heavily loaded wireless system, all mobiles will soon end up at their maximum transmission power. This phenomenon is described as the "party effect" [60] and should be prevented. Based on these observations, it is meaningful to consider the joint minimization of squared error between the SIR target and the actual SIR value plus the square of the transmission power. Adding penalty on the mobile's transmission power in the performance criterion will reduce the "party effect". Furthermore, power will be saved when there is a certain tolerance on the user's SIR error. This optimization criterion reflects the basic tradeoff between the achievable QoS and the mobile's transmission power consumption.

2.3.1 Unconstrained Optimization

Theorem 2 *Define the performance criteria at time instant k as*

$$J_i(k) = \min_{\alpha_i(k)} [\rho_1(e_i(k+1))^2 + \rho_2(p_i(k+1))^2] \ , \quad i = 1, 2, ..., N. \tag{2.46}$$

Reproduced with permission of the copyright owner. Further reproduction prohibited without permission.

where $\rho_1 > 0$ and $\rho_2 > 0$ are weighting parameters. The optimal gains of the power control algorithm (2.5) that minimize $J_i(k)$ at every time instant k are

$$\alpha_i^{opt}(k) = \begin{cases} \frac{1}{\delta_i(k)}(1 - \frac{\gamma_i^{tar}}{e_i(k)}) + \frac{\rho_1\delta_i(k+1)}{\rho_1(\delta_i(k+1))^2+\rho_2}\frac{\gamma_i^{tar}}{e_i(k)} & if \quad e_i(k) \neq 0 \\ 0 & if \quad e_i(k) = 0 \end{cases} \tag{2.47}$$

where

$$\delta_i(k) = \frac{Lh_{ni}(k)}{I_{ni}(k)} > 0$$

$$\delta_i(k+1) = \frac{Lh_{ni}(k+1)}{I_{ni}(k+1)} > 0$$

and $h_{ni}(k), h_{ni}(k+1), I_{ni}(k), I_{ni}(k+1) > 0$, $\forall k$. The minimal values of the performance criteria are

$$J_i^{opt}(k) = \rho_1(e_i^{opt}(k+1))^2 + \rho_2(p_i^{opt}(k+1))^2 \tag{2.48}$$

The optimal SIR errors and the optimal power evolutions are given by

$$e_i^{opt}(k+1) = (1 - \frac{\rho_1(\delta_i(k+1))^2}{\rho_1(\delta_i(k+1))^2 + \rho_2})\gamma_i^{tar} \tag{2.49}$$

$$p_i^{opt}(k+1) = \frac{\rho_1\delta_i(k+1)}{\rho_1(\delta_i(k+1))^2 + \rho_2}\gamma_i^{tar} \tag{2.50}$$

when the optimal gains $\alpha_i^{opt}(k)$ are applied.

Proof: Firstly, we derive the error dynamic equation using (2.1)-(2.5)

$$\begin{aligned} e_i(k+1) &= \gamma_i^{tar} - \gamma_i(k+1) \\ &= \gamma_i^{tar} - \delta_i(k+1)p_i(k+1) \\ &= \gamma_i^{tar} - \delta_i(k+1)(p_i(k) + \alpha_i(k)e_i(k)) \\ &= \gamma_i^{tar} - \delta_i(k+1)(\frac{\gamma_i(k)}{\delta_i(k)} + \alpha_i(k)e_i(k)) \\ &= \gamma_i^{tar} - \delta_i(k+1)(\frac{\gamma_i^{tar} - e_i(k)}{\delta_i(k)} + \alpha_i(k)e_i(k)) \\ &= (-\delta_i(k+1)\alpha_i(k) + \frac{\delta_i(k+1)}{\delta_i(k)})e_i(k) + (1 - \frac{\delta_i(k+1)}{\delta_i(k)})\gamma_i^{tar} \end{aligned} \tag{2.51}$$

Secondly, we compute the square of the error

$$\begin{aligned} (e_i(k+1))^2 &= (-\delta_i(k+1)\alpha_i(k) + \frac{\delta_i(k+1)}{\delta_i(k)})^2(e_i(k))^2 \\ &\quad +(1 - \frac{\delta_i(k+1)}{\delta_i(k)})^2(\gamma_i^{tar})^2 + 2(-\delta_i(k+1)\alpha_i(k) + \frac{\delta_i(k+1)}{\delta_i(k)}) \\ &\quad e_i(k)(1 - \frac{\delta_i(k+1)}{\delta_i(k)})\gamma_i^{tar} \end{aligned} \tag{2.52}$$

Reproduced with permission of the copyright owner. Further reproduction prohibited without permission.

Thirdly, we derive the formula of $p_i(k+1)$

$$\begin{aligned} p_i(k+1) &= p_i(k) + \alpha_i(k)e_i(k) \\ &= \frac{\gamma_i^{tar} - e_i(k)}{\delta_i(k)} + \alpha_i(k)e_i(k) \end{aligned} \tag{2.53}$$

Fourthly, we compute the square of $p_i(k+1)$

$$(p_i(k+1))^2 = (\frac{\gamma_i^{tar} - e_i(k)}{\delta_i(k)})^2 + (\alpha_i(k)e_i(k))^2 + 2\frac{\gamma_i^{tar} - e_i(k)}{\delta_i(k)}\alpha_i(k)e_i(k) \tag{2.54}$$

let us derive the performance criterion

$$\begin{aligned} \rho_1(e_i(k+1))^2 &+ \rho_2(p_i(k+1))^2 = \rho_1[(-\delta_i(k+1)\alpha_i(k) + \frac{\delta_i(k+1)}{\delta_i(k)})^2(e_i(k))^2 \\ &+ (1 - \frac{\delta_i(k+1)}{\delta_i(k)})^2(\gamma_i^{tar})^2 + 2(-\delta_i(k+1)\alpha_i(k) \\ &+ \frac{\delta_i(k+1)}{\delta_i(k)})e_i(k)(1 - \frac{\delta_i(k+1)}{\delta_i(k)})\gamma_i^{tar}] + \rho_2[(\frac{\gamma_i^{tar} - e_i(k)}{\delta_i(k)})^2 \\ &+ (\alpha_i(k)e_i(k))^2 + 2\frac{\gamma_i^{tar} - e_i(k)}{\delta_i(k)}\alpha_i(k)e_i(k)] \end{aligned} \tag{2.55}$$

From the necessary conditions for optimality at time instant k

$$\frac{\partial J_i(k)}{\partial \alpha_i(k)} = \frac{\partial[\rho_1(e_i(k+1))^2 + \rho_2(p_i(k+1))^2]}{\partial \alpha_i(k)} = 0 \tag{2.56}$$

we have

$$\alpha_i^{opt}(k) = \frac{1}{\delta_i(k)}(1 - \frac{\gamma_i^{tar}}{e_i(k)}) + \frac{\rho_1\delta_i(k+1)}{\rho_1(\delta_i(k+1))^2 + \rho_2}\frac{\gamma_i^{tar}}{e_i(k)} \tag{2.57}$$

Taking the second derivative we obtain

$$\frac{\partial^2 J_i(k)}{\partial \alpha_i^2(k)} = 2\rho_1(\delta_i(k+1)e_i(k))^2 + 2\rho_2(e_i(k))^2 > 0 \tag{2.58}$$

which indicates that the resulting $J_i(k)$ by using $\alpha_i^{opt}(k)$ is a minimum and establishes the sufficient part of the theorem. Using Bellman's optimality principle [46], we achieve optimality in the whole power control duration by applying this power control algorithm at each time step. In other words, choices of controller gains in (2.47) are optimal for all k. ■

The closed-loop performance can be evaluated by calculating $e_i(k+1)$ using $\alpha_i^{opt}(k)$.

$$\begin{aligned} p_i^{opt}(k+1) &= p_i(k) + \alpha_i^{opt}(k)e_i(k) \\ &= \frac{\rho_1\delta_i(k+1)}{\rho_1(\delta_i(k+1))^2 + \rho_2}\gamma_i^{tar} \end{aligned} \tag{2.59}$$

Reproduced with permission of the copyright owner. Further reproduction prohibited without permission.

$$e_i(k+1) = (1 - \frac{\rho_1(\delta_i(k+1))^2}{\rho_1(\delta_i(k+1))^2 + \rho_2})\gamma_i^{tar} \tag{2.60}$$

It is obvious that $e_i(k+1)$ will be zero when ρ_2 is set to zero. The weighting parameters ρ_1 and ρ_2 decide the tradeoff between user's SIR error (QoS) and power consumption.

It is noticeable that the proposed controller is an estimator based controller. The idea of quick online estimation of link quality was mentioned in [33]. It is pointed out that any adaptive power control scheme needs a quick detection of the change of link quality. The performance of the estimator will have direct impact on the performance of the power control scheme. Let $\hat{\delta}_i(k)$ and $\hat{\delta}_i(k+1)$ denote the estimated/predicted value of $\delta_i(k)$ and $\delta_i(k+1)$, respectively. Then the gain applied to the power control algorithm is

$$\hat{\alpha}_i(k) = \begin{cases} \frac{1}{\hat{\delta}_i(k)}(1 - \frac{\gamma_i^{tar}}{e_i(k)}) + \frac{\rho_1\hat{\delta}_i(k+1)}{\rho_1(\hat{\delta}_i(k+1))^2+\rho_2}\frac{\gamma_i^{tar}}{e_i(k)} & if \quad e_i(k) \neq 0 \\ 0 & if \quad e_i(k) = 0 \end{cases} \tag{2.61}$$

The error between the actual SIR and the desired SIR at the next time instant $k+1$ is

$$\begin{aligned} e_i(k+1) &= \delta_i(k+1)[(\frac{1}{\delta_i(k)} - \frac{1}{\hat{\delta}_i(k)})(e_i(k) - \gamma_i^{tar})] \\ &\quad +(1 - \delta_i(k+1)\frac{\rho_1\hat{\delta}_i(k+1)}{\rho_1(\hat{\delta}_i(k+1))^2 + \rho_2})\gamma_i^{tar} \end{aligned} \tag{2.62}$$

It is obvious that if the estimated/predicted value of $\delta_i(k)$ and $\delta_i(k+1)$ are close to the real values, and $\rho_2 \approx 0$, then $e_i(k+1) \approx 0$. The power evolution is given by

$$p_i(k+1) = p_i(k) + \hat{\alpha}_i(k)e_i(k) = \frac{\rho_1\hat{\delta}_i(k+1)}{\rho_1(\hat{\delta}_i(k+1))^2 + \rho_2}\gamma_i^{tar} \tag{2.63}$$

The block diagram of the complete power control system composed of N links with estimators is shown in Figure 2.4, where the effect of correlation in the received power from interfering users is taken into account.

2.3.2 Constrained Optimization

Define the performance criterion at time instant k as

$$J_i(k) = \min_{\alpha_i(k)}[\rho_1(e_i(k+1))^2 + \rho_2(p_i(k+1))^2], \quad i = 1, 2, ..., N. \tag{2.64}$$

Reproduced with permission of the copyright owner. Further reproduction prohibited without permission.

subject to

$$0 < p^{min} \leq p_i(k) \ , \ p_i(k+1) \leq p^{max} \tag{2.65}$$

where $\rho_1 > 0$ and $\rho_2 > 0$ are weighting parameters.

First we solve the case when $e_i(k) > 0$. We solve this nonlinear programming problem by the well-known Kuhn-Tucker condition [45].

Introduce two scalars $u_1 \geq 0$ and $u_2 \geq 0$, the conditions for optimality are (when $e_i(k) > 0$)

$$\frac{\partial J_i(k)}{\partial \alpha_i(k)} + u_1 \frac{\partial(\alpha_i(k) - \frac{p^{max} - p_i(k)}{e_i(k)})}{\partial \alpha_i(k)} + u_2 \frac{\partial(\frac{p^{min} - p_i(k)}{e_i(k)} - \alpha_i(k))}{\partial \alpha_i(k)} = 0 \tag{2.66}$$

$$u_1(\alpha_i(k) - \frac{p^{max} - p_i(k)}{e_i(k)}) = 0 \tag{2.67}$$

$$u_2(\frac{p^{min} - p_i(k)}{e_i(k)} - \alpha_i(k)) = 0 \tag{2.68}$$

We solve the above equations for four different cases.

Case 1. $u_1 > 0$ and $u_2 > 0$ This case produces no solution.

Case 2. $u_1 = 0$ and $u_2 > 0$

$$\alpha_i(k) = \frac{p^{min} - p_i(k)}{e_i(k)} \tag{2.69}$$

solving for u_2, we obtain

$$\begin{aligned} u_2 &= \rho_1\{2\delta_i(k+1)e_i(k)[\delta_i(k+1)(p^{min} - p_i(k)) - \frac{\delta_i(k+1)}{\delta_i(k)}e_i(k) \\ &- (1 - \frac{\delta_i(k+1)}{\delta_i(k)})\gamma_i^{tar}]\} + \rho_2\{2e_i(k)p_i(k+1)\} \\ &= \rho_1\{2\delta_i(k+1)e_i(k)[\delta_i(k+1)p^{min} - \gamma_i^{tar}]\} + \rho_2\{2e_i(k)p^{min}\} \end{aligned} \tag{2.70}$$

In order that $u_2 > 0$, we have

$$\delta_i(k+1)p^{min} > \gamma_i^{tar} \tag{2.71}$$

Case 3. $u_2 = 0$ and $u_1 > 0$

$$\alpha_i(k) = \frac{p^{max} - p_i(k)}{e_i(k)} \tag{2.72}$$

Reproduced with permission of the copyright owner. Further reproduction prohibited without permission.

solving for u_1, we obtain

$$\begin{aligned} u_1 &= \rho_1\{2\delta_i(k+1)e_i(k)[-\delta_i(k+1)(p^{max}-p_i(k)) + \frac{\delta_i(k+1)}{\delta_i(k)}e_i(k) \\ &+ (1-\frac{\delta_i(k+1)}{\delta_i(k)})\gamma_i^{tar}]\} - \rho_2\{2e_i(k)p_i(k+1)\} \\ &= \rho_1\{2\delta_i(k+1)e_i(k)[\gamma_i^{tar} - \delta_i(k+1)p^{max}\} - \rho_2\{2e_i(k)p^{max}\} \end{aligned} \tag{2.73}$$

In order that $u_1 > 0$, we have

$$\frac{\rho_1(\delta_i(k+1))^2 + \rho_2}{\rho_1\delta_i(k+1)}p^{max} < \gamma_i^{tar} \tag{2.74}$$

Case 4. $u_1 = 0$ and $u_2 = 0$

This case corresponds to the unconstrained optimization problem that we have solved in the last section. There exists a unique solution as stated in Theorem 1.

Secondly, we solve the case when $e_i(k) < 0$. The conditions for optimality are (when $e_i(k) < 0$)

$$\frac{\partial J_i(k)}{\partial \alpha_i(k)} + u_1\frac{\partial(\alpha_i(k) - \frac{p^{min}-p_i(k)}{e_i(k)})}{\partial \alpha_i(k)} + u_2\frac{\partial(\frac{p^{max}-p_i(k)}{e_i(k)} - \alpha_i(k))}{\partial \alpha_i(k)} = 0 \tag{2.75}$$

$$u_1(\alpha_i(k) - \frac{p^{min}-p_i(k)}{e_i(k)}) = 0 \tag{2.76}$$

$$u_2(\frac{p^{max}-p_i(k)}{e_i(k)} - \alpha_i(k)) = 0 \tag{2.77}$$

We have to solve the above equations for four different cases.

Case 1. $u_1 > 0$ and $u_2 > 0$ This case has no solution.

Case 2. $u_1 = 0$ and $u_2 > 0$

$$\alpha_i(k) = \frac{p^{max}-p_i(k)}{e_i(k)} \tag{2.78}$$

solving for u_2, we obtain

$$\begin{aligned} u_2 &= \rho_1\{2\delta_i(k+1)e_i(k)[\delta_i(k+1)(p^{max}-p_i(k)) - \frac{\delta_i(k+1)}{\delta_i(k)}e_i(k) \\ &- (1-\frac{\delta_i(k+1)}{\delta_i(k)})\gamma_i^{tar}]\} + \rho_2\{2e_i(k)p_i(k+1)\} \\ &= \rho_1\{2\delta_i(k+1)e_i(k)[\delta_i(k+1)p^{max} - \gamma_i^{tar}]\} + \rho_2\{2e_i(k)p^{max}\} \end{aligned} \tag{2.79}$$

In order that $u_2 > 0$, we have

$$\frac{\rho_1(\delta_i(k+1))^2 + \rho_2}{\rho_1\delta_i(k+1)}p^{max} < \gamma_i^{tar} \tag{2.80}$$

Reproduced with permission of the copyright owner. Further reproduction prohibited without permission.

Case 3. $u_2 = 0$ and $u_1 > 0$

$$\alpha_i(k) = \frac{p^{min} - p_i(k)}{e_i(k)} \tag{2.81}$$

Solving for u_1 we have

$$\begin{aligned} u_1 &= \rho_1\{2\delta_i(k+1)e_i(k)[-\delta_i(k+1)(p^{min} - p_i(k)) + \frac{\delta_i(k+1)}{\delta_i(k)}e_i(k) \\ &+ (1 - \frac{\delta_i(k+1)}{\delta_i(k)})\gamma_i^{tar}]\} - \rho_2\{2e_i(k)p_i(k+1)\} \\ &= \rho_1\{2\delta_i(k+1)e_i(k)[-\delta_i(k+1)p^{min} + \gamma_i^{tar}]\} - \rho_2\{2e_i(k)p^{min}\} \end{aligned} \tag{2.82}$$

In order that $u_1 > 0$, we have

$$\delta_i(k+1)p^{min} > \gamma_i^{tar} \tag{2.83}$$

Case 4. $u_1 = 0$ and $u_2 = 0$

This case corresponds to the unconstrained optimization problem we have solved in the last section. There exists a unique solution as stated in Theorem 1.

The solution of the above nonlinear programming problem is given by

$$p_i(k+1) = \begin{cases} p^{min} & if \quad \delta_i(k+1) > \frac{\gamma_i^{tar}}{p^{min}} \\ p^{max} & if \quad \frac{\rho_1(\delta_i(k+1))^2+\rho_2}{\rho_1\delta_i(k+1)} < \frac{\gamma_i^{tar}}{p^{max}} \\ p_i(k) + \alpha_i^{opt}(k)e_i(k) & o.w. \end{cases} \tag{2.84}$$

where $\alpha_i^{opt}(k)$ was defined in (2.47).

The solution of the joint optimization contains three different cases. Firstly, when the channel is very good, the mobile only need to transmit with minimum power. Secondly, when the channel is extremly poor, the mobile tries to maintain its SIR level by transmitting with its maximum power. In this case, the power control problem becomes infeasible. Under normal channel conditions, the optimal power allocation hardly hits the lower/upper bound. They can only happen under extreme conditions, namely, when the target SIR is set too low $\delta_i(k+1)p^{min} > \gamma_i^{tar}$ or too high $\frac{\rho_1(\delta_i(k+1))^2+\rho_2}{\rho_1\delta_i(k+1)}p^{max} < \gamma_i^{tar}$. These extreme conditions can happen in the proposed power control scheme when γ_i^{tar} is not set properly and/or when measurements and/or predictions are far from the real values. These extreme conditions provide a mean to evaluate the quality of the H_∞ filter (or any other estimator used) when γ_i^{tar} is set properly. It can be stated as

Reproduced with permission of the copyright owner. Further reproduction prohibited without permission.

if $\frac{\rho_1(\hat{\delta}_i(k+1))^2+\rho_2}{\rho_1\hat{\delta}_i(k+1)} < \frac{\gamma_i^{tar}}{p^{max}}$, or if $\hat{\delta}_i(k+1) > \frac{\gamma_i^{tar}}{p^{min}}$, then the predictions are bad.

Based on the above discussions, the joint optimal control of SIR error and transmission power using estimator is given by

$$p_i(k+1) = \begin{cases} p^{min} & if \quad \hat{\delta}_i(k+1) > \frac{\gamma_i^{tar}}{p^{min}} \\ p^{max} & if \quad \frac{\rho_1(\hat{\delta}_i(k+1))^2+\rho_2}{\rho_1\hat{\delta}_i(k+1)} < \frac{\gamma_i^{tar}}{p^{max}} \\ p_i(k) + \hat{\alpha}_i(k)e_i(k) & o.w. \end{cases} \tag{2.85}$$

where $\hat{\alpha}_i(k)$ was defined in (2.61). The resulting joint optimal control of SIR error and transmission power (2.85) has more complicated form than the optimal control of SIR error only (2.42) because of the penalty on the mobile's transmission power.

In order to compute $\hat{\alpha}_i(k)$, we need a "good" estimator/predictor. The H_∞ filter is a very promissing candidate. We will discuss this issue in the next section.

2.4 H_∞ Filter as an Optimal Estimator/Predictor

The problem of filtering involves estimation of system states using past measurements. The development of efficient linear estimation algorithms, (e.g., the Kalman filter), has been based mainly on the minimization of the L_2 -norm of the corresponding estimation error. This type of estimation assumes that the message generating process has known dynamics and that exogenous inputs have known statistical properties. The well-known Kalman filter offers optimal filtering algorithm when the system model parameters are known and the noise is white Gaussian noise processes with known statistics (power spectral density). Unfortunately, these assumptions limit the utility of the minimum variance estimators in situations where the massage model and/or the noise descriptions are unknown or not known exactly. This fact led to a wide interest in minimax estimation and robust filtering [40]-[44].

In contrast to Kalman filtering, H_∞ filtering is a pure deterministic concept [44]. The Kalman filter assumes that system and measurement disturbances are white Gaussian stochastic processes and requires the knowledge of their statistics. The H_∞ filter considers the system filtering regardless of the nature of the system and measurement disturbances, as long as the power of the disturbance is bounded [43]-[44].

Reproduced with permission of the copyright owner. Further reproduction prohibited without permission.

In [30], Leung applied the Kalman filter to predict the interference in the immediate future. Its usage is constrained by the requirement of the Kalman filter, i.e., the fluctuation of the interference has to be Gaussian white noise stochastic process, which is not the case in general [30].

In the proposed power control scheme, $\delta(k)$ and $\delta(k+1)$ have to be estimated and predicted, respectively. Generally speaking, any estimator can be used. However, the fluctuation of $\delta(k)$ and $\delta(k+1)$ do not have a Gaussian distribution in general. Their distribution may not be known in most cases. Hence the Kalman filter may not be able to give good performance here. On the other hand, the H_∞ filter does not require any knowledge of the statistics of system and measurement disturbances. This makes the H_∞ filter an appropriate estimator for the proposed power control scheme. First, we will review some results about the discrete-time H_∞ filter [43].

Consider the following discrete-time system

$$x(k+1) = A(k)x(k) + B(k)w(k) \ , \ x(0) = x_0 \tag{2.86}$$

with the measurements

$$z(k) = C(k)x(k) + v(k) \tag{2.87}$$

where $x(k)$ is the state vector, $w(k)$ is the process disturbance vector, $z(k)$ is the measurement vector and $v(k)$ is the measurement disturbance vector. $A(k)$, $B(k)$ and $C(k)$ are matrices of appropriate dimensions. Define measurement history as $z(k)$, $k = 0, 1, ..., N-1$. The estimate of $\hat{x}(k)$ is computed based on the measurement history up to $k-1$. The H_∞ filter is required to provide an uniformly small estimation error $x(k) - \hat{x}(k)$ for any $w(k), v(k) \in l_2$ and $x_0 \in R^n$. The performance criterion is given by

$$J = \frac{\sum_{k=0}^{N-1} ||z(k) - \hat{z}(k)||^2_{Q(k)}}{||x(0) - \hat{x}(0)||^2_{P^{-1}(0)} + \sum_{k=0}^{N-1} ||w(k)||^2_{W^{-1}(k)} + ||v(k)||^2_{V^{-1}(k)}} \tag{2.88}$$

where $Q(k)$, $W(k)$ and $V(k)$ are weighting matrices. The optimization problem is

$$\sup_{Q(k),W(k),V(k)} J < \frac{1}{\lambda} \tag{2.89}$$

where λ is a prescribed level of disturbance attenuation. The resulting discrete-time H_∞ filter is given by [43]

$$\hat{x}(k+1) = A(k)\hat{x}(k) + K(k)(z(k) - C(k)\hat{x}(k)) \tag{2.90}$$

Reproduced with permission of the copyright owner. Further reproduction prohibited without permission.

where $K(k)$ is the optimal gain of the H_∞ filter and is computed by the following equation [43]

$$K(k) = A(k)P(k)(I - \lambda Q(k)P(k) + C^T(k)V^{-1}(k)C(k)P(k))^{-1}C^T(k)V^{-1}(k) \quad (2.91)$$

where $P(k)$ is the unique positive definite solution of the following discrete-time Riccati equation

$$\begin{aligned} P(k+1) &= A(k)P(k)(I - \lambda Q(k)P(k) + C^T(k)V^{-1}(k)C(k)P(k))^{-1}A^T(k) \\ &\quad + B(k)W(k)B^T(k) \end{aligned} \quad (2.92)$$

with $P(0) = P_0$.

Recall that $\delta_i(k) = \frac{Lh_{ni}(k)}{I_{ni}(k)} > 0$ and $\delta_i(k+1) = \frac{Lh_{ni}(k+1)}{I_{ni}(k+1)} > 0$. $I_{ni}(k)$ and $I_{ni}(k+1)$ are actual interference-plus-noise power in dBm at time instants k and $k+1$, respectively. $h_{ni}(k)$ and $h_{ni}(k+1)$ are link gains from the ith mobile to the nth base station at time instants k and $k+1$, respectively. Assume the link gain has the following form

$$h_{ni}(k) = d_{ni}^{-4}(k)A_{ni}(k)B_{ni}(k) \quad (2.93)$$

where $d_{ni}(k)$ is the distance from the ith mobile to the nth base station at time instant k, A_{ni} is a log-normal distributed stochastic process, and B_{ni} is contributed by Rayleigh fading.

The dynamics of δ_i (in db) is described by

$$\delta_i(k+1) = \delta_i(k) + w_i(k) \quad (2.94)$$

where $w_i(k)$ represents the process noise (disturbance). Let $z_i(k)$ be the measurement of $\delta_i(k)$.

$$z_i(k) = \delta_i(k) + v_i(k) \quad (2.95)$$

where $v_i(k)$ is the measurement noise. Due to the scalar nature of the problem, it is obvious that the controllability and observability conditions are met. These conditions are needed for the existence of the appropriate solution of the Riccati equations (2.48)(2.49). The H_∞ filter (suboptimal) solves the following optimization problem

$$\sup_{Q_i, W_i, V_i} \frac{\sum_{k=0}^{N-1} ||\delta_i(k) - \hat{\delta}_i(k)||_{Q_i}^2}{||\delta_i(0) - \hat{\delta}_i(0)||_{P^{-1}(0)}^2 + \sum_{k=0}^{N-1} ||w(k)||_{W_i^{-1}}^2 + ||v(k)||_{V_i^{-1}}^2} < \frac{1}{\lambda} \quad (2.96)$$

Reproduced with permission of the copyright owner. Further reproduction prohibited without permission.

The discrete-time H_∞ filter is given by

$$\hat{\delta}_i(k+1) = \hat{\delta}_i(k) + K_i(k)(z_i(k) - \hat{\delta}_i(k)) \tag{2.97}$$

where $K_i(k)$ is the optimal gain of the H_∞ filter, which is computed by the following equation

$$K_i(k) = P_i(k)(I - \lambda Q_i P_i(k) + V_i^{-1}(k)P_i(k))^{-1}V_i^{-1}(k) \tag{2.98}$$

Since here $P_i(k)$, Q_i and V_i are all scalars, it can be written as

$$K_i(k) = \frac{P_i(k)}{(1 - \lambda Q_i P_i(k) + \frac{P_i(k)}{V_i})V_i} \tag{2.99}$$

and $P_i(k)$ is the unique positive solution of the following scalar discrete-time Riccati equation

$$P_i(k+1) = P_i(k)(I - \lambda Q_i P_i(k) + V_i^{-1}(k)P_i(k))^{-1} + W_i \tag{2.100}$$

Again, since here $P_i(k)$, Q_i, W_i and V_i are all scalars, (2.56) can be written as

$$P_i(k+1) = \frac{P_i(k)}{1 - \lambda Q_i P_i(k) + \frac{P_i(k)}{V_i}} + W_i \tag{2.101}$$

The initial condition of the system is $\delta_i(0) = \delta_{i0}$. The initial condition of the above H_∞ filter is $P_i(0) = P_{i0}$. It can be shown from (2.56) that the steady-state value of $P_i(k)$ satisfies

$$P_{i,ss} = \frac{W_i(\frac{1}{V_i} - \lambda Q_i) \pm \sqrt{(W_i(\frac{1}{V_i} - \lambda Q_i))^2 + 4W_i(\frac{1}{V_i} - \lambda Q_i)}}{2(\frac{1}{V_i} - \lambda Q_i)} \tag{2.102}$$

Only the positive one is the steady-state solution of $P_i(k)$. It is obvious that the choice of the optimization parameters λ, Q_i, W_i and V_i is important. In order to get a unique positive definite solution of $P_i(k)$, one condition is $\lambda < \frac{1}{V_i Q_i}$.

The block diagram of our H_∞ filter is shown in Figure 2.5.

In addition of performing estimation and prediction, the H_∞ filter also attenuates disturbances from base station and channel, respectively. One of the main properties of H_∞ filter is that it minimizes the H_∞ norm of the transfer function from the disturbance to the system output.

Reproduced with permission of the copyright owner. Further reproduction prohibited without permission.

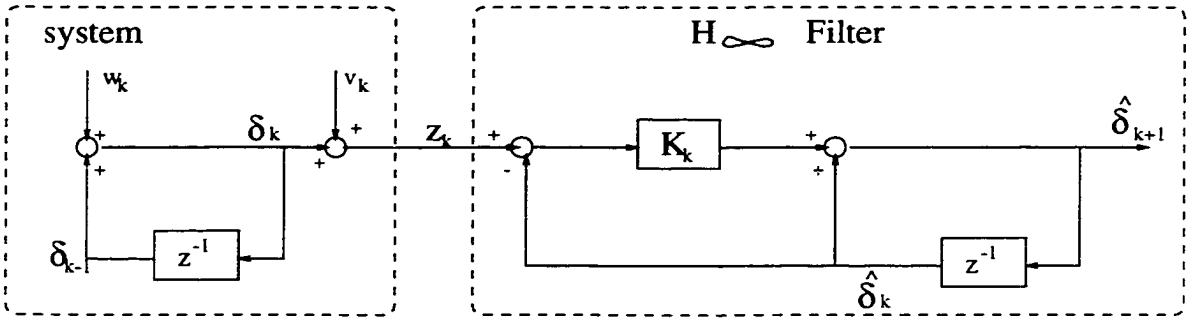

Figure 2.5: The structure of the discrete-time H_∞ filter

2.5 Simulation Results and Analysis

In this section, simulations of a CDMA system are performed to demonstrate effectiveness of the proposed power control scheme. Comparison between the proposed optimal power control scheme and other existing power control schemes clearly shows the advantages of the proposed scheme.

A CDMA system with 7 hexagonal cells and 16 users per cell is considered. The operating frequency is 1.9 GHz and the bandwidth of each channel is assumed to be 1.23 MHz, which is in accordance to the CDMA 2000 standard [21]. Data rate is set at 9600 bps and the processing gain is set at 128 (21 dB). The target SIR is 7 dB, which corresponds to the bit error rate (BER) being less than 10^{-3}. Note that the SIR, as defined in this paper, includes the processing gain, which is denoted by $\frac{E_b}{N_0}$ in the standard IS-95B [20]/CDMA 2000 [21], where E_b is the energy per information bit and N_0 is the interference power spectral density.

In simulation, we further make the following assumptions:

1. The effects of antenna directivity, voice activity factor, and soft handoff are ignored.

2. The minimum and maximum power can be transmitted by a mobile (IS-95B[20]) are $p^{min} = 8$ dBm (6.3 mW) and $p^{max} = 33$ dBm (2 W), respectively.

3. The background noise power is 10^{-9} mW.

4. The transmitted power is updated periodically, every 0.625 msec, which corresponds to 1,600 Hz fast closed-loop power control frequency proposed in IMT-2000.

5. The antenna of the base station and all mobiles are omnidirectional.

Reproduced with permission of the copyright owner. Further reproduction prohibited without permission.

6. Mobiles are assumed to be uniformly distributed in a cell.

7. It is assumed that the link gains have the following form

$$h_{ni}(k) = d_{ni}^{-4}(k)A_{ni}(k)B_{ni}(k) \tag{2.103}$$

where $d_{ni}(k)$ is the distance from the ith mobile to the nth base station at time instant k, A_{ni} is a log-normal distributed stochastic process, and B_{ni} is contributed by Rayleigh fading [30].

8. It is assumed that the cell diameter is 2 km. $d_{ni}(k)$ is a 2-D uniformly distributed random variable, [30].

9. It is assumed that the standard deviation of A_{ni} is 8 dB, [30].

10. The speed of the mobiles are ranging from 0.5 mph to 60 mph. The maximum Doppler frequency is 80 Hz, which correspond to 60 mph mobile speed. $B_{ni}(k)$ is simulated using a filtered Gaussian noise model, [30].

11. The initial mobile transmitted power is taken as $p_0 = p^{min} + \eta(p^{max} - p^{min})$, where $\eta \in [0, 1]$ is a uniformly distributed random number.

12. The mean values of the link gains are used in the simulation since only the deterministic case is considered in this paper.

The optimization parameters of the H_∞ filter are $\lambda = 0.05$, $Q_i = 20$, $W_i = 1$ and $V_i = 0.1$ for all mobiles. In addition, δ_0 and P_0 are positive random numbers obtained by using random number generators.

A plot of the link gains is shown in Figure 2.6, only the first 4 channels are shown. We choose the mean value of the link gains in our simulations as in the deterministic case.

We consider three cases, based on the range of the desired SIR, namely, when γ^{tar} is feasible, when γ^{tar} is set too high, and when γ^{tar} is set too low. Only the performance of the first 4 users in cell one is shown. All other users have similar performances.

Case 1. γ^{tar} is feasible ($\gamma^{tar} = 7$ dB).

When γ^{tar} is feasible, the SIR of all four users converge to the desired value (7 dB) in

Reproduced with permission of the copyright owner. Further reproduction prohibited without permission.

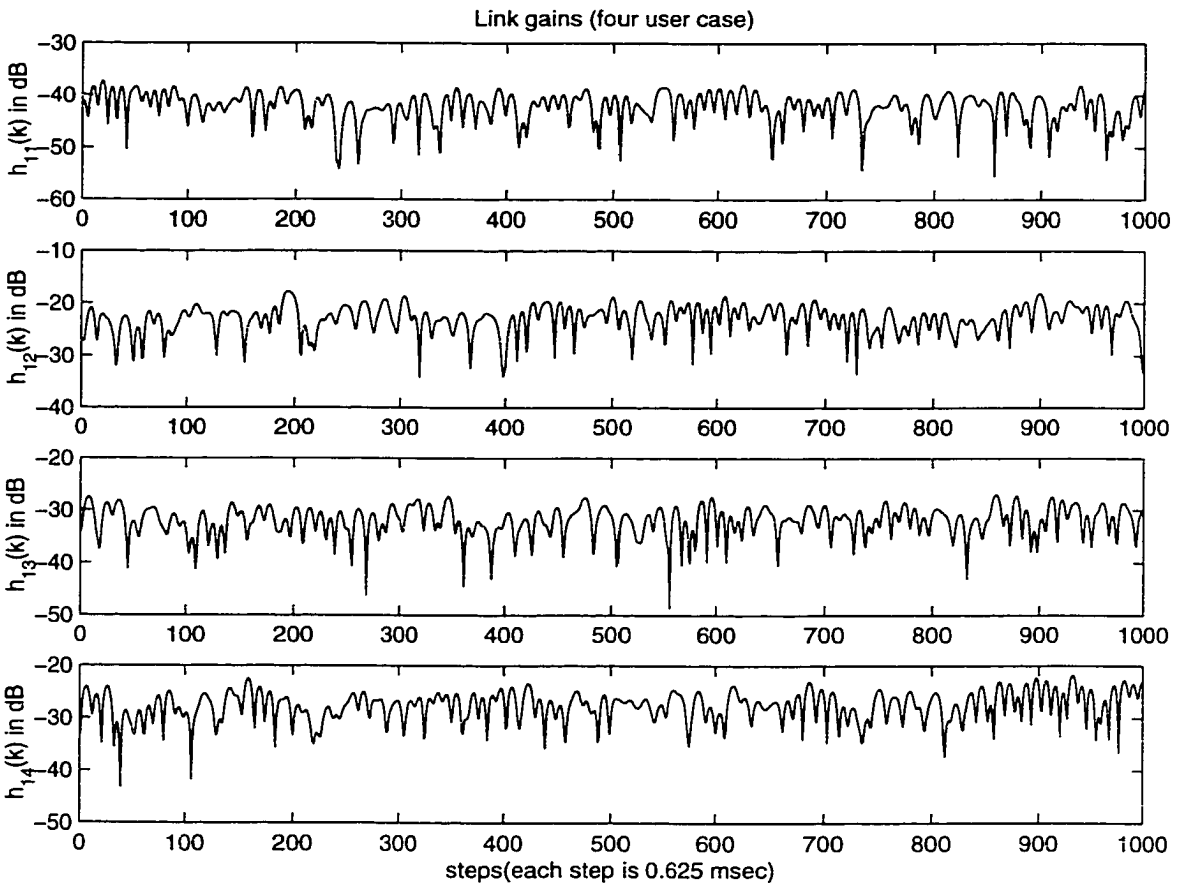

Figure 2.6: Link gains in dB

Reproduced with permission of the copyright owner. Further reproduction prohibited without permission.

a few steps (less than 5 steps or 3.125 msec, Figure 2.7). The estimations/predictions catch the real values in several steps (in 4 steps, Figure 2.9). After that the errors between the desired SIR and the actual values of SIR go to zero in one step. This complies with theoretical analysis of Section 2.2. The transmitter power of all four mobiles are within normal range (several tens of dBm, Figure 2.8).

Case 2. γ^{tar} is set too high ($\gamma^{tar} = 20$ dB).

When γ^{tar} is set too high, the transmitter power of all four mobiles goes to p^{max} (Figure 2.11), which is 33 dBm (2 W). Because γ^{tar} is not feasible, the resulting SIR is still below the desired value (Figure 2.10). The performance of the H_∞ filter remains good (Figure 2.12) because it does not depend on the value of γ^{tar}.

Case 3. γ^{tar} is set too low ($\gamma^{tar} = 0$ dB).

When γ^{tar} is set too low, the transmitter power of all four mobiles goes to p^{min} (Figure 2.14), which is 8 dBm (6.3 mW). The steady-state errors are negative, which means the resulting SIR is still higher than the desired one (Figure 2.13). The performance of the H_∞ filter is good (Figure 2.15) because it does not depend on the value of γ^{tar}. However, the performance of the H_∞ filter is affected by the values of the parameters in the performance criterion of the filter.

The simulation results in all three cases fit theoretical analysis (Section 2.2) very well. These results indicate that the optimal power control scheme is a very promissing solution of the distributed fast closed-loop power control problem in wireless systems, both theoretically and practically.

In the current IS-95 systems, the power control scheme is up/down hard decision type [20]. It can not achieve zero SIR error, due to persistent oscillations around zero [14].

A widely known and accepted power control scheme is called the Distributed Constrained Power Control (DCPC), and is given by [5]

$$p_i(k+1) = min\{\frac{\gamma_i^{tar}}{\gamma_i(k)} p_i(k), \ \ p^{max}\} \tag{2.104}$$

The performances of the proposed optimal power control scheme, DCPC, and IS-95 are compared in Figure 2.16 and 2.17. When the channel is stationary (the mean

Reproduced with permission of the copyright owner. Further reproduction prohibited without permission.

values of the channels are constants), the optimal scheme will save at least 2 frames, that would be lost if either of the other two power control schemes were used.

When channel changes frequently, the estimator used will have good tracking of the channel quality and the proposed optimal power control scheme will also provide accurate values for power adjustments almost instantly. On the other hand, DCPC and up/down scheme in IS-95 will not converge fast enough and will not provide appropriate power changes.

The fast convergence of the proposed algorithm is shown in Figure 2.18 and 2.19. The DCPC algorithm is slower and the IS95 falls far behind. Another advantage of the proposed algorithm is that it is an estimator based controller, which in turn means that it will adapt to channel changes. This property is obvious when channel quality has abrupt changes, as in Figure 2.18 and 2.19 (channel quality becomes very bad at step 11).

The power evolution and the SIR error performance of the power control scheme obtained by applying joint minimization of SIR error and transmission power, are presented in Figure 2.20 and 2.21. In the same figures, we also present the results for the power control scheme that minimize only SIR error, and the results for IS-95. It is clearly shown that with the penalty on mobile's transmission power, the joint minimization scheme uses less mobile's transmission power, while keeping small SIR errors. This SIR error performance will be the same as the one obtained by using the optimal power control scheme which minimizes SIR error only in the practical CDMA systems due to the quantization effect at the mobile when receiving the power control command [10]. Even the optimal power control scheme, which minimizes SIR error only, can not achieve zero SIR errors due to the quantization effect. Thus, this joint minimization power control scheme has the advantage to save mobile's transmission power, while maintaining low level for the SIR error. With less mobile's transmission power, the joint minimization scheme has a much better SIR error performance than the IS-95 scheme. When there is no penalty on mobile's transmission power by setting $\rho_2 = 0$, the joint minimization scheme reduces to the optimal power control scheme which minimizes SIR error only [35]. Figure 2.20 and 2.21 also indicate that IS95 try to save

Reproduced with permission of the copyright owner. Further reproduction prohibited without permission.

some mobile's transmission power. However, it has constant SIR error (a couple of dB below target). The detailed numerical value of transmission power and SIR error of user 1 at steady-state is listed in Table 2.1. It indicates that with similar transmission power, the IS-95 will produce larger SIR error (about 1 dB) than the optimal scheme. In other words, if both schemes have the same SIR error, the optimal scheme will use less transmission power (approximately 3 dBm) than the IS-95.

The proposed power control scheme works well when users with different QoS requirements exist in the same wireless network. Figure 2.22 shows the SIR performance for 2 groups of users with SIR target at 7 db and 10 db, respectively. Due to robustness of the H_∞ filter, this scheme has a quick response to channel changes. A test result is shown in Figure 2.23 when channel goes very bad at step 11. Both groups of users maintain their QoS by adapting to the channel change very fast.

Figure 2.24 and 2.25 show the SIR performance and user's transmission power under different filter parameters. Here $V_i = W_i = Q_i = 1$. λ is the noise attenuation factor. When λ is big, the power control scheme is aggressive to achieve the desired SIR, thus consumes more power. On the other hand, when λ is small, the power control scheme is less aggressive, however, saves a lot of transmission power. Similar performances are shown in Figure 2.26 and 2.27 under fading channels.

2.6 Practical Issues

In this chapter, we have proposed an optimal power control scheme. We have not elaborated on the implementation details. The proposed scheme may not be able to be implemented in existing TDMA systems since currently there is no feedback mechanism of power control command from the base to the mobile available in those systems. The scheme primarily proposed to be implemented in CDMA systems, especially wideband CDMA systems, to compensate slowly varying power control errors by shadow fading and fast varying power control errors by Rayleigh fading.

Fast closed-loop power control is proposed to be implemented in the third generation wideband CDMA systems. The proposed optimal distributed fast power control scheme

Reproduced with permission of the copyright owner. Further reproduction prohibited without permission.

in this research work is effective and robust to track slow and/or fast fading.

It points out in [64-65] that the fixed step closed-loop power control performance varies under different vehicular speed, propagation channels and delays. In other words, the performance of the fixed step closed-loop power control can only be optimized for a particular vehicular speed, or Doppler frequency.

Figure 2.28 shows the global picture of how the feedback power control works between base station and the mobile. Since more exact power adjustment than currently available fixed power control steps (1 dB, 0.5 dB) has to be sent to the mobile by the base station through the downlink, a multi-bit overhead has to be introduced instead of a single-bit overhead in the feedback loop currently available in most CDMA systems (e.g., IS-95B). Multi-bit feedback efficiency, quantization effect and discrete power control step size have to be considered carefully in implementation.

A new idea of optimal power control implementation is presented in Figure 2.29. Instead of inserting Transmission Power Control (TPC) bit every slot in raw bit, we encode 4-5 Transmission Power Control (TPC) bits in each frame. Based on the observation that the optimal power control scheme will give a very accurate power adjustment in just a few steps, it is expected that the optimal scheme will be good enough to track the channel variation. Other advantages include low overhead and low probability of error of interpreting the power control command.

In general, the feature of the proposed optimal power control scheme are:

1. Fast convergence. Theoretically the SIR will converge to the desired value in one step. Practically the convergence takes 4-5 steps since time is needed for the estimator to provide accurate estimates.

2. It is an estimator based control scheme, which is robust with respect to channel variation.

3. It reduce the overhead dramatically since power control bits are only transmitted on a frame-by-frame bases.

4. The error probability of the power control command will be greatly reduced because the power control bits are encoded.

Reproduced with permission of the copyright owner. Further reproduction prohibited without permission.

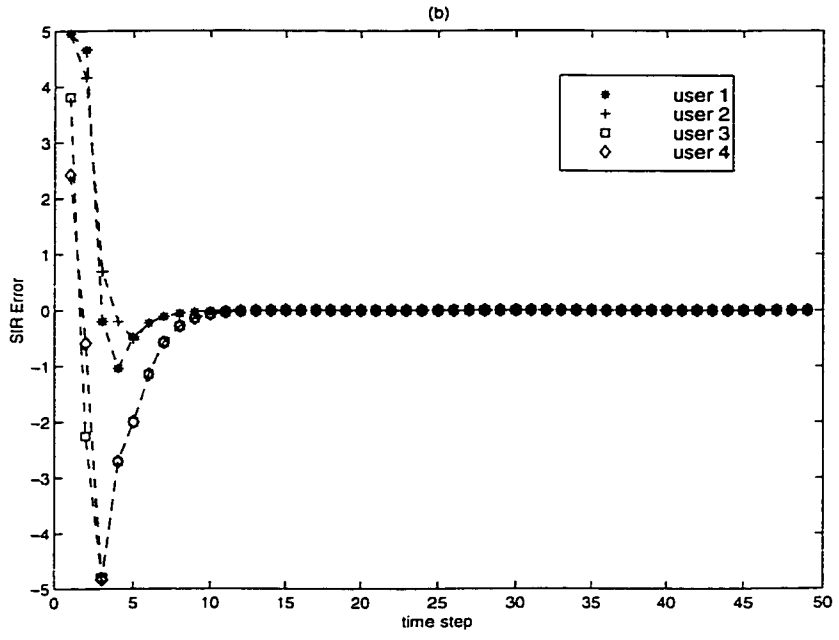

Figure 2.7: SIR error when γ^{tar} is feasible

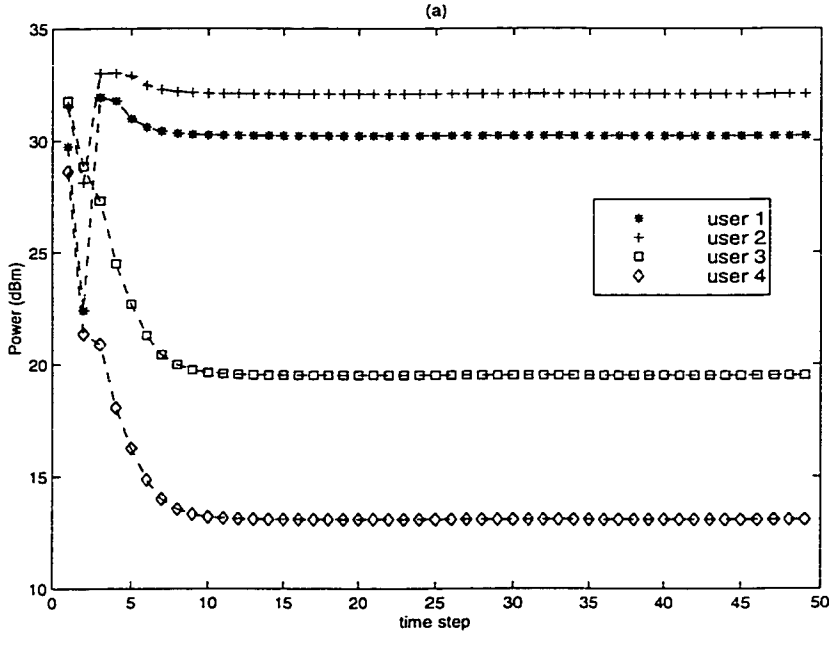

Figure 2.8: Power evolution when γ^{tar} is feasible

Reproduced with permission of the copyright owner. Further reproduction prohibited without permission.

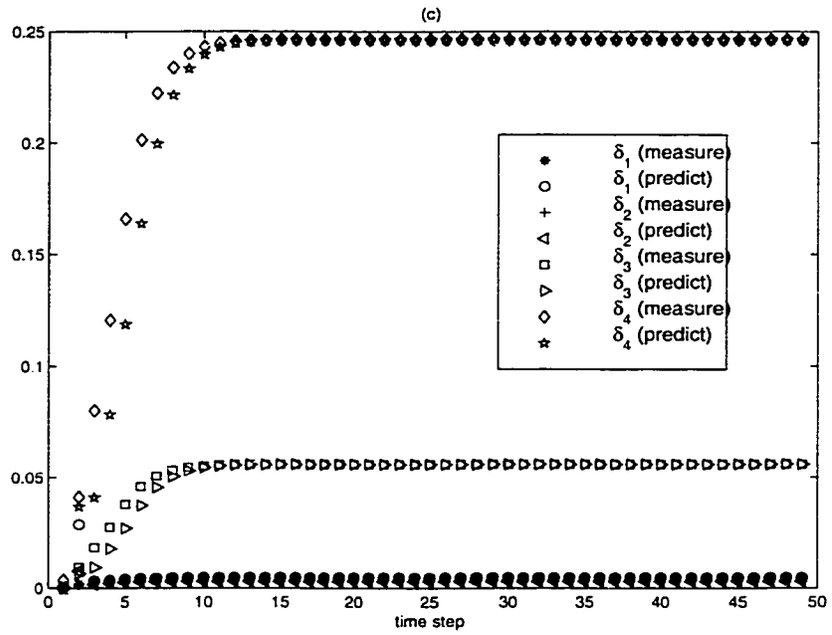

Figure 2.9: Performance of the H_∞ filter when γ^{tar} is feasible

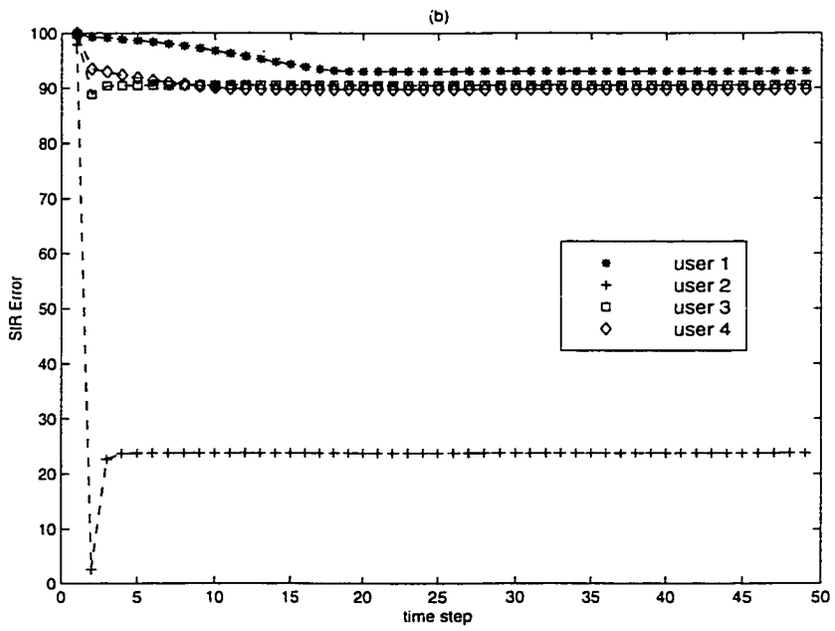

Figure 2.10: SIR error when γ^{tar} is set too high

Reproduced with permission of the copyright owner. Further reproduction prohibited without permission.

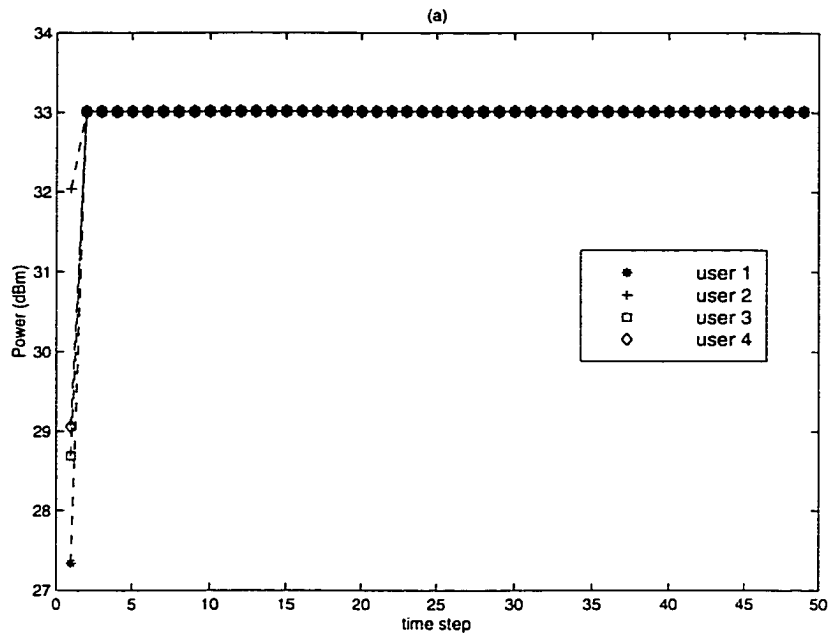

Figure 2.11: Power evolution when γ^{tar} is set too high

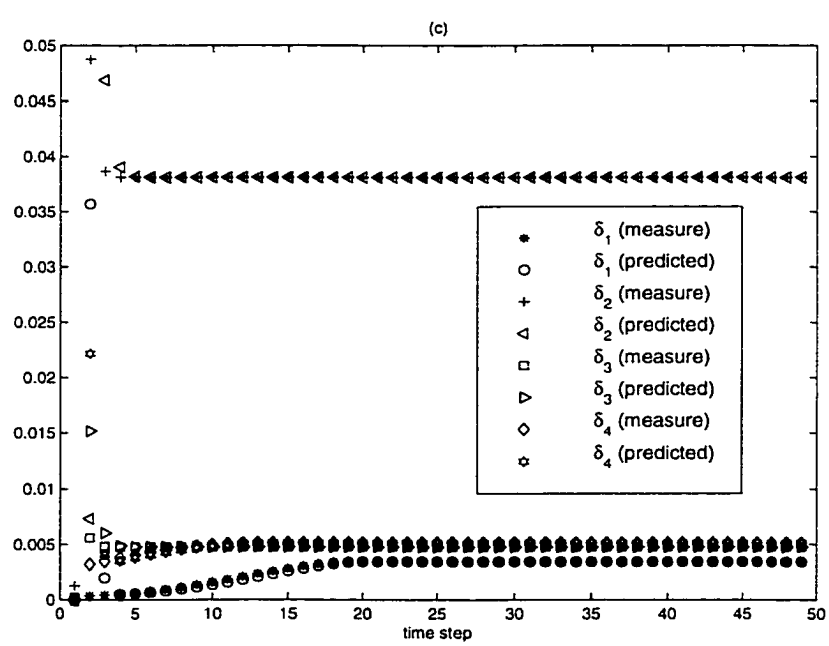

Figure 2.12: Performance of the H_∞ filterwhen γ^{tar} is set too high

Reproduced with permission of the copyright owner. Further reproduction prohibited without permission.

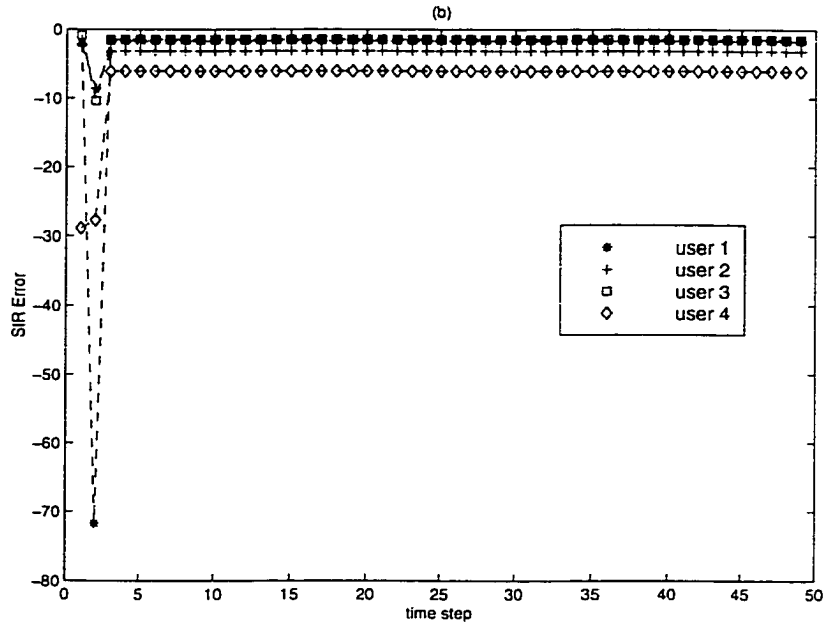

Figure 2.13: SIR error when γ^{tar} is set too low

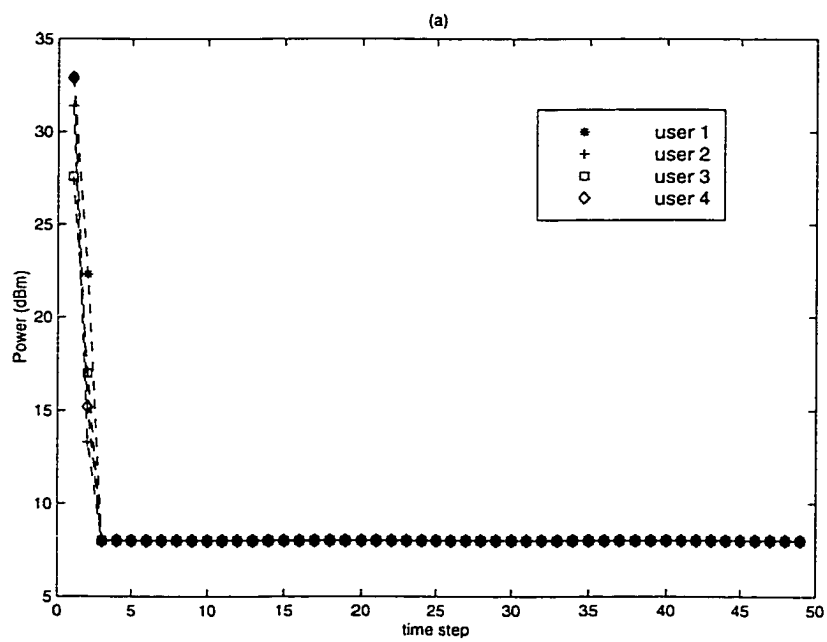

Figure 2.14: Power evolution when γ^{tar} is set too low

Reproduced with permission of the copyright owner. Further reproduction prohibited without permission.

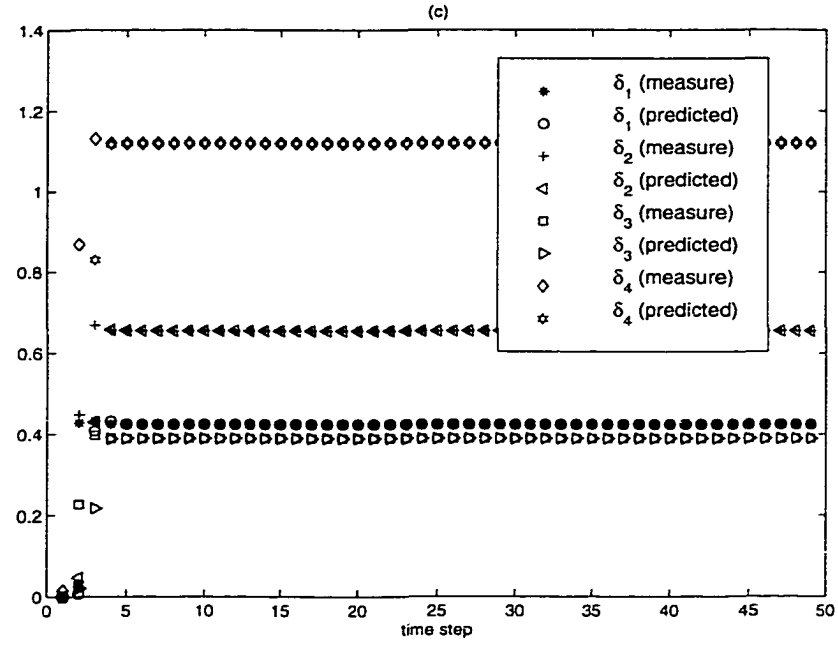

Figure 2.15: Performance of the H_∞ filter when γ^{tar} is set too low

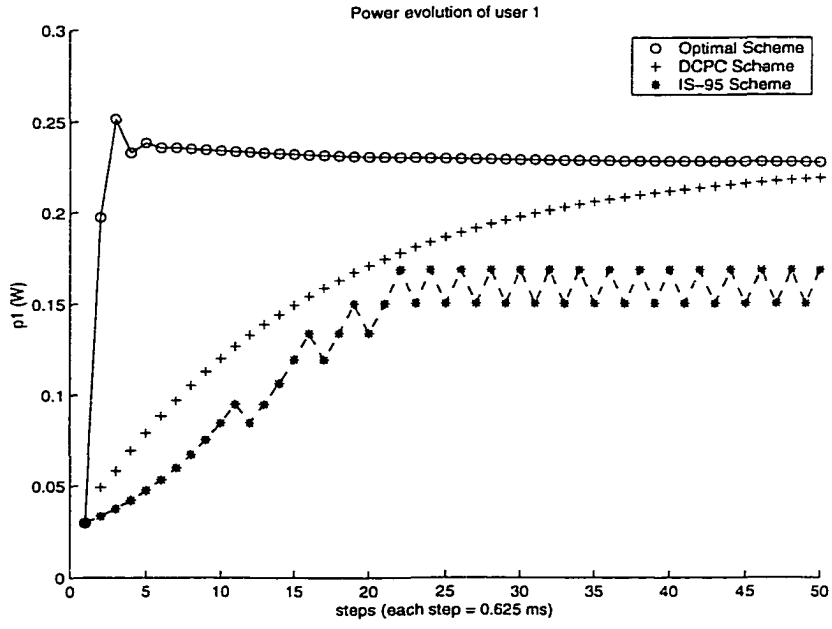

Figure 2.16: Power evolution

Reproduced with permission of the copyright owner. Further reproduction prohibited without permission.

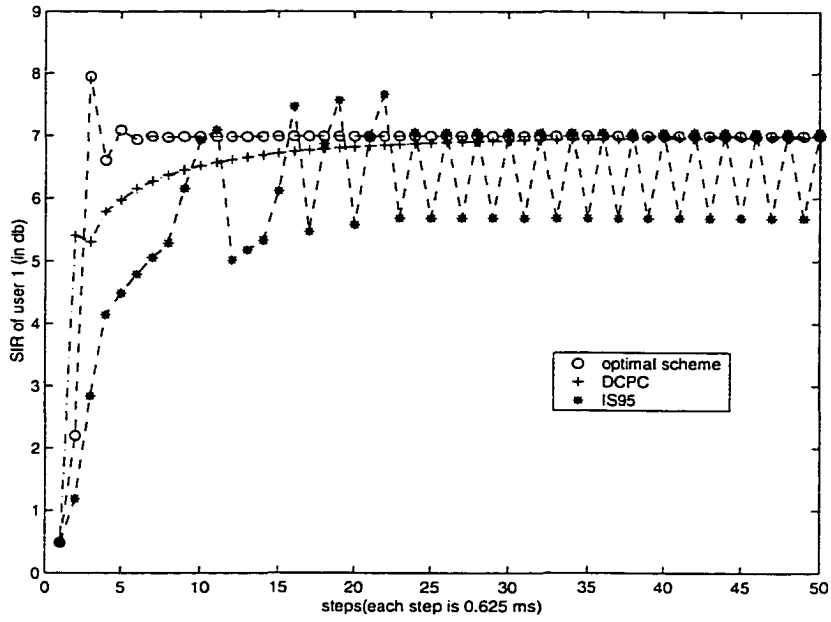

Figure 2.17: SIR error

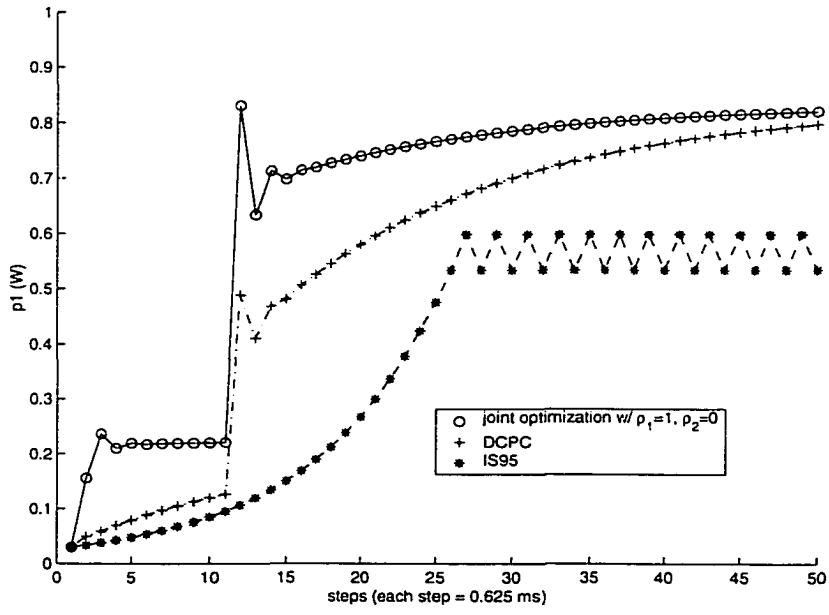

Figure 2.18: Fast convergence of the proposed power control scheme: Power evolution

Reproduced with permission of the copyright owner. Further reproduction prohibited without permission.

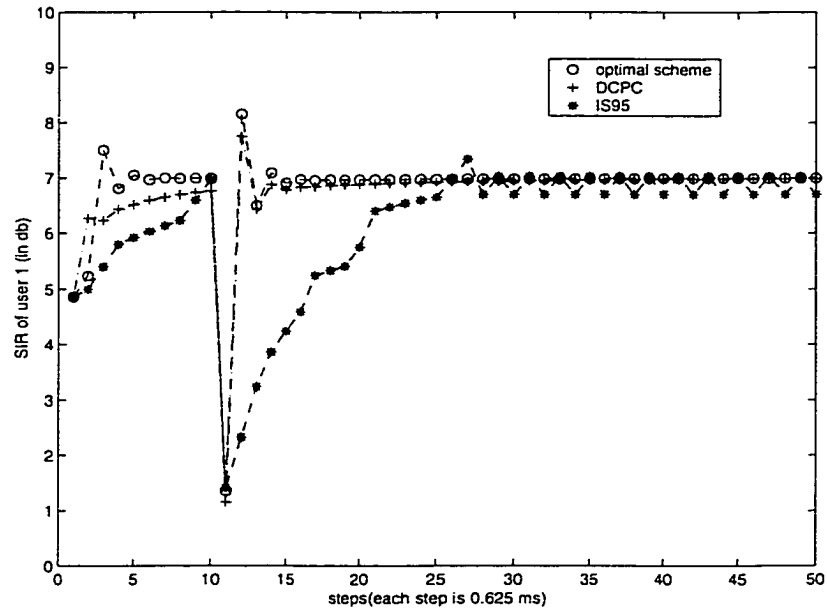

Figure 2.19: Fast convergence of the proposed power control scheme: SIR

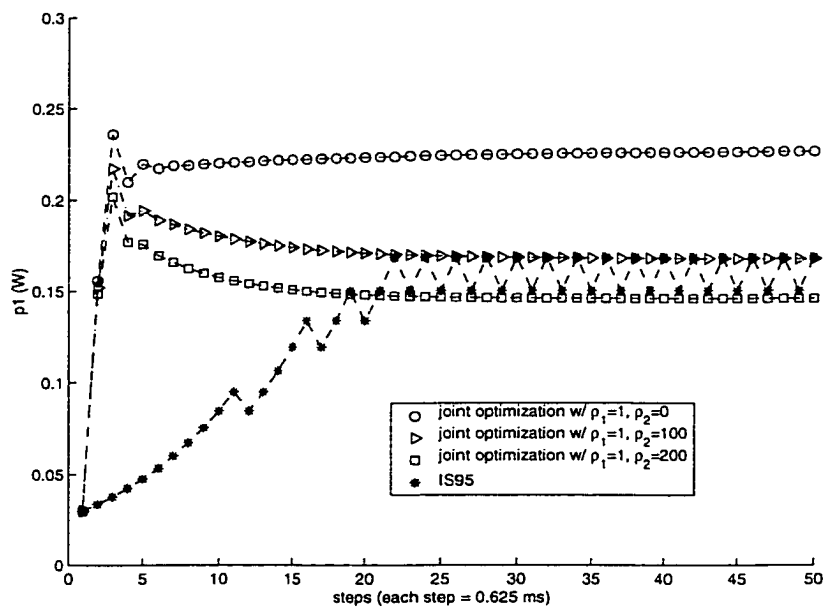

Figure 2.20: Comparison between the power control scheme minimizing SIR error only, and joint minimization of SIR error and transmission power and IS-95: power evolution

Reproduced with permission of the copyright owner. Further reproduction prohibited without permission.

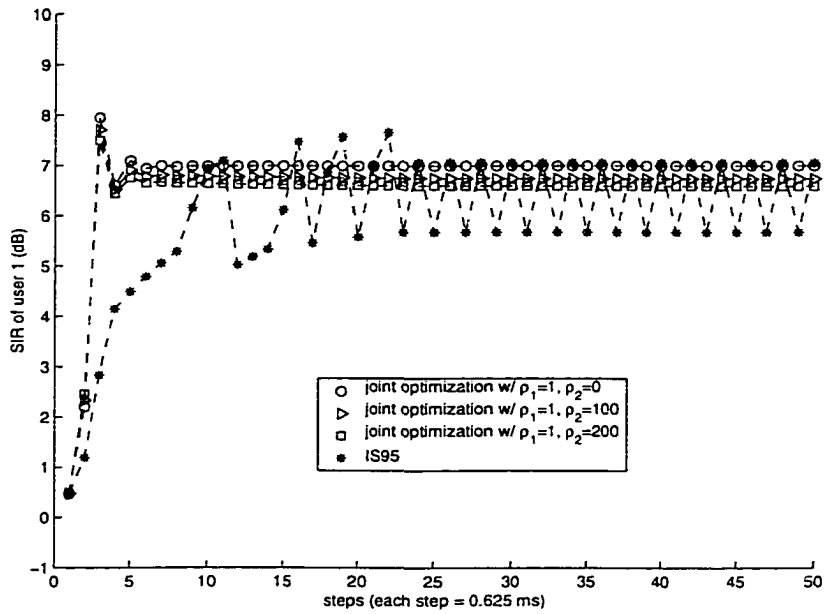

Figure 2.21: Comparison between the power control scheme minimizing SIR error only, and joint minimization of SIR error and transmission power and IS-95: SIR of user 1

Optimal Scheme	Weights		Performance	
	ρ_1	ρ_2	p_1 (in dBm)	SIR Error (in db)
	1	1	23.54	0.004
	1	100	22.25	0.2586
	1	200	21.64	0.4052
	1	1000	19.82	1
IS-95			(22.27+21.77)/2 = 22.02	1.4

Table 2.1. Steady-state performance of user 1 using optimal scheme and IS-95

Reproduced with permission of the copyright owner. Further reproduction prohibited without permission.

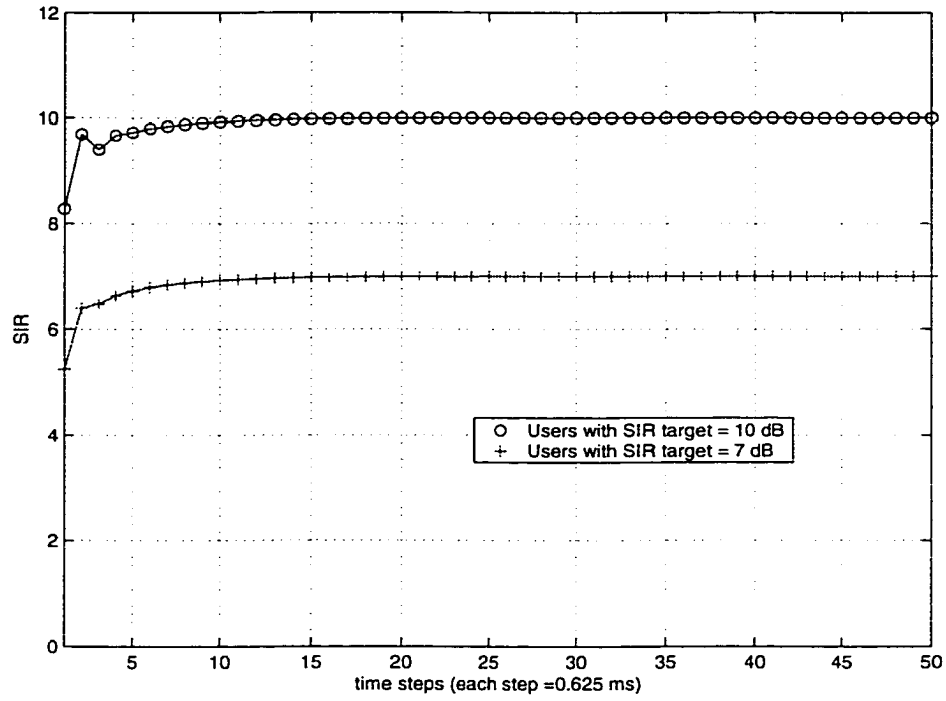

Figure 2.22: Performance of users with different SIR targets

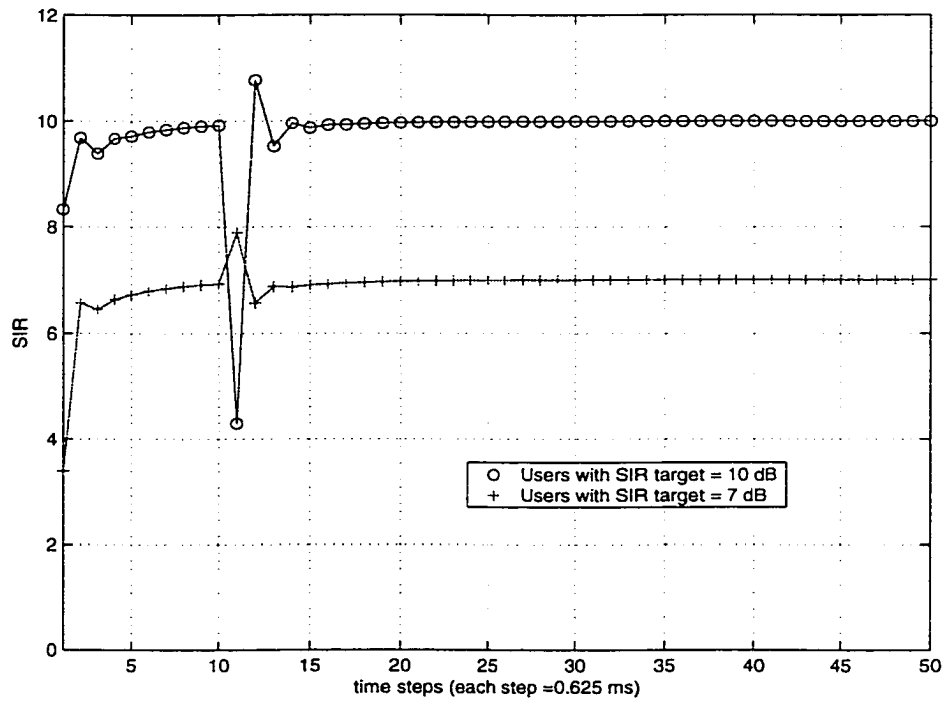

Figure 2.23: Performance of users with different SIR targets

Reproduced with permission of the copyright owner. Further reproduction prohibited without permission.

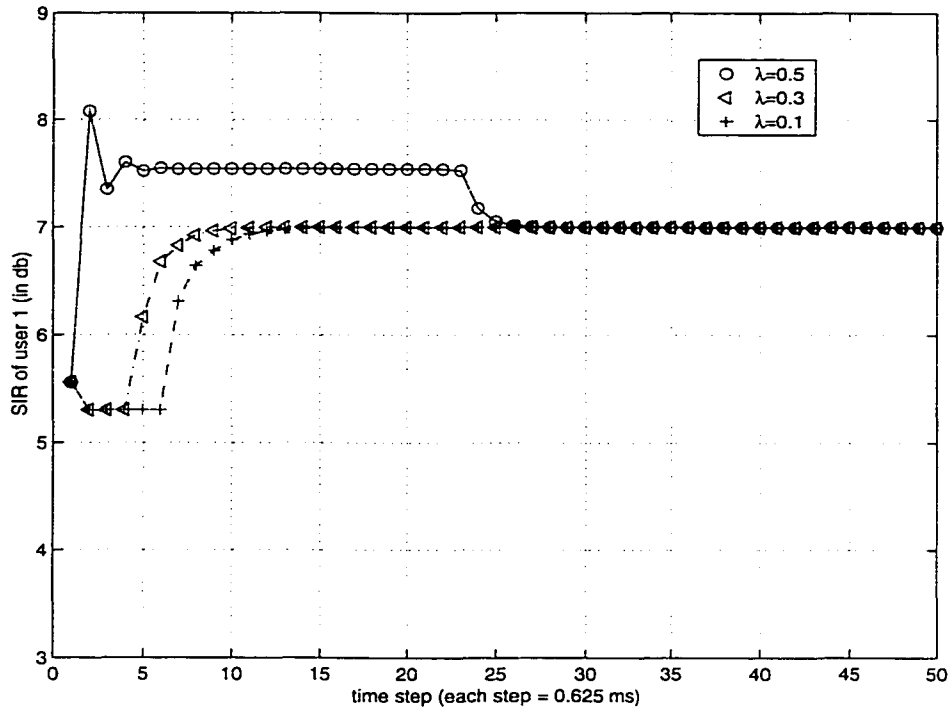

Figure 2.24: SIR of user 1 under different optimization parameters

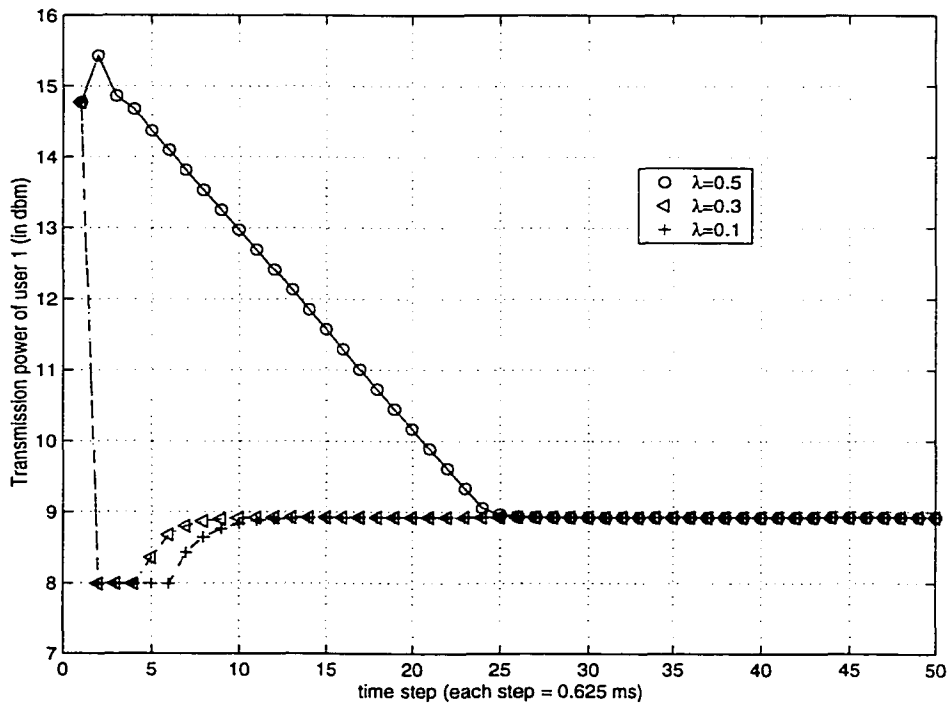

Figure 2.25: Transmission power of user 1 under different optimization parameters

Reproduced with permission of the copyright owner. Further reproduction prohibited without permission.

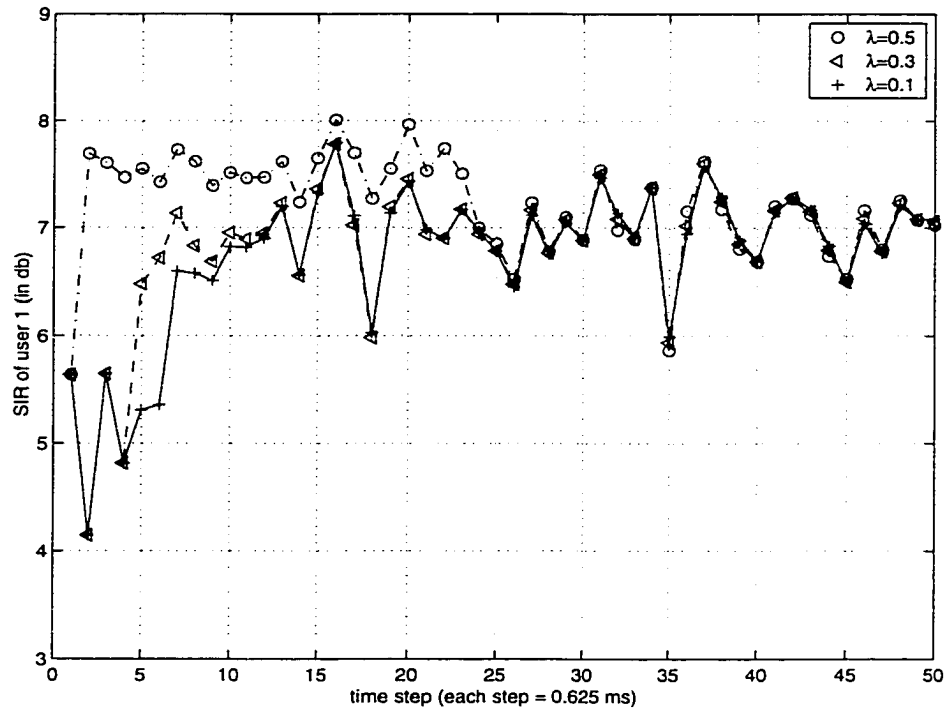

Figure 2.26: SIR of user 1 under fading channels and different optimization parameters

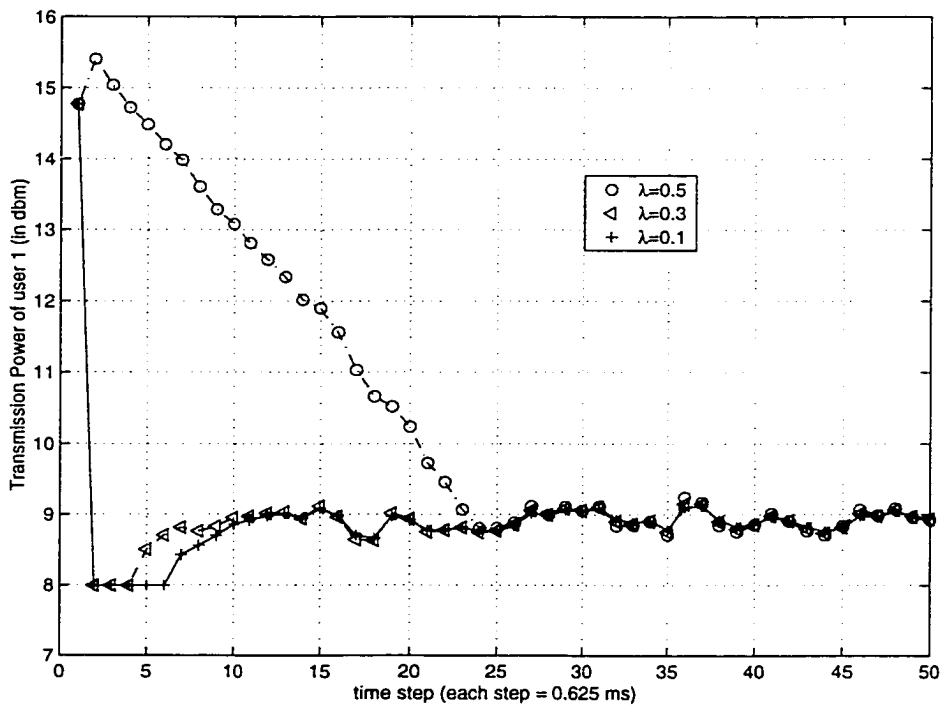

Figure 2.27: Transmission power of user 1 under fading channels and different optimization parameters

Reproduced with permission of the copyright owner. Further reproduction prohibited without permission.

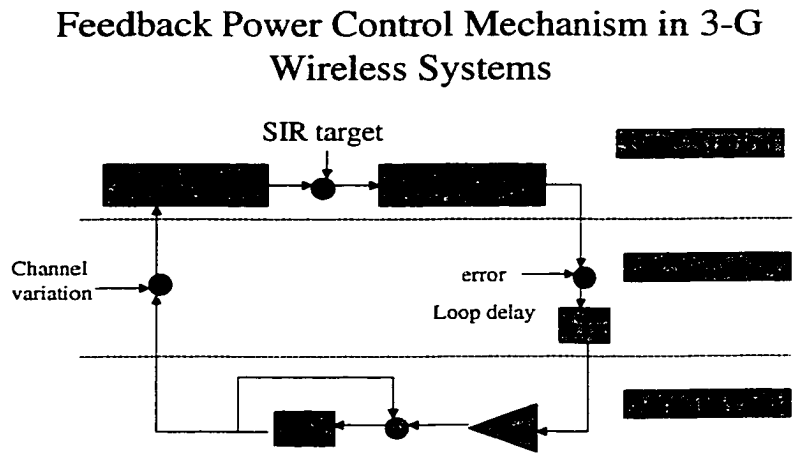

Figure 2.28: Closed-loop power control architecture in 3-G wireless systems

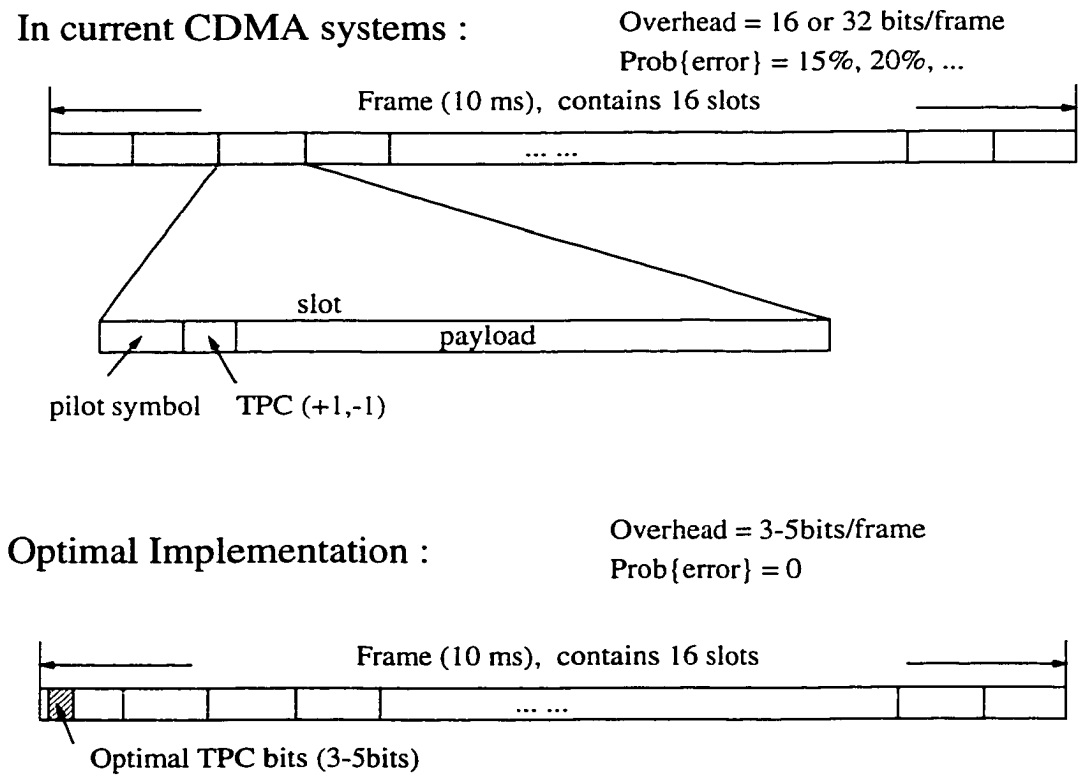

Figure 2.29: Implementation of the optimal control scheme in 3-G wireless systems: frame format

Reproduced with permission of the copyright owner. Further reproduction prohibited without permission.

Chapter 3

Optimal Closed-Loop SIR-based Distributed Power Control - Stochastic Case

In this chapter, we extend the results from Chapter 2 to a more realistic case, where the measurement of SIR is noisy (assumed to be a white noise stochastic process). Because of the stochastic nature of the link gains, the received power, interference, and SIR are all random processes fluctuating in time. Hence the stochastic power control scheme is essential. The stochastic power control reported in [39] assumes stochastic measurements of matched filter outputs at the receiver of the base station. In this chapter, we assume stochastic measurements of SIR at the base station according to the SIR measurement procedure of the 3-G wireless systems [61-62]. The SIR measurement procedure is briefly described in Section 3.1. An optimal stochastic power control scheme is derived in Section 3.2 by formulating the power control system as a linear system driven by white noise. In Section 3.3, this optimal solution is extended to an estimator based scheme. The quantization effect is considered in Section 3.4 through simulation. Section 3.5 gives conclusions and comments.

3.1 Stochastic Measurement of SIR

In wireless CDMA systems, the Signal-to-Interference Ratio (SIR) is an important parameter to measure channel quality. The measurement procedure of the SIR in the proposed 3-G wireless systems based on Wideband CDMA is described in this section.

The SIR measurement module was implemented in both IS95 [63] and Wideband CDMA proposed for the third generation wireless systems [61-62]. The base station behavior is shown in Figure 3.1. SIR measurements are done after RAKE combining. The frame structure using time-multiplexed pilots well supports SIR measurements [72].

Reproduced with permission of the copyright owner. Further reproduction prohibited without permission.

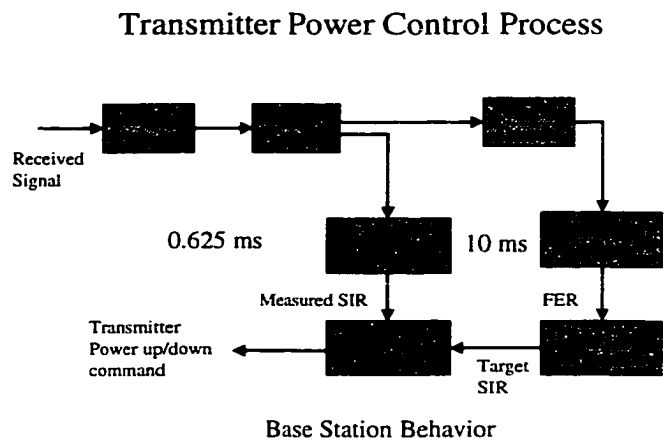

Figure 3.1: Base station behavior in 3-G wireless systems

Both pilot and data symbols are used to measure instantaneous received signal power. Only the pilot symbols are used to measure instantaneous interference plus noise power, which is followed by averaging using a first-order filter [61],[72]. In [39], the average of the squared matched filter output (total received power) was assumed to have white Gaussian noise. Then the power evolution is based on the total received power at the base station. In this research work, we assume that the measurements of SIR from the SIR measurement module at the base station contain white noise. We propose a SIR-based stochastic power control scheme using optimal control theory.

Suppose that the matched filter output signal at the n-th symbol position of the k-th slot associated with the l-th propagation path is $r_l(n,k)$. Assume that the number of Rake fingers is L, then the Rake combiner output is

$$\tilde{r}(n,k) = \sum_{l=0}^{L-1} r_l(n,k)\tilde{\xi}_l^*(k), \qquad 0 \le n \le N_{slot} - 1 \tag{3.1}$$

where $\tilde{\xi}_l^*(k)$ is the complex conjugate of channel estimate $\tilde{\xi}_l(k)$. $\tilde{\xi}_l(k)$ can be calculated as the average of N_p pilot symbols belonging to the k-th slot. N_{slot} is the number of symbols in one slot. $\tilde{r}(n,k)$ is used to measure the SIR ($y_i(k)$) for user i at the k-th slot. $y_i(k)$ is defined as $y_i(k) = S_i(k)/\bar{I}_i(k)$, where $S_i(k)$ and $\bar{I}_i(k)$ are the instantaneous received signal power and the average interference plus noise power, respectively.

Reproduced with permission of the copyright owner. Further reproduction prohibited without permission.

The Rake combiner output is reverse modulated by the tentative symbol decision and accumulated to reduce the effect of Multiple Access Interference (MAI), followed by the square operation to obtain the instantaneous received signal power. The instantaneous MAI plus noise power $I_{ni}(k)$ is obtained from the squared error of the received pilot samples and then averaged using a first-order filter with forgetting factor $\beta < 1$. $S_i(k)$ is computed from

$$S_i(k) = |\frac{1}{N_m}(\sum_{n=0}^{N_p-1} \tilde{r}(n,k) + \sum_{n=N_p}^{N_m-1} \tilde{r}(n,k)\exp(-j\tilde{\phi}(n,k)))|^2 \tag{3.2}$$

where N_m is the number of symbols measured, including both pilot and data symbols. $\tilde{\phi}(n,k)$ is decided by

$$\tilde{\phi}(n,k) = \max_{\phi \in \{m\pi/2; m=0-3\}} Re\{\tilde{r}(n,k)\exp(-j\phi)\} \tag{3.3}$$

$I_{ni}(k)$ is obtained from

$$I_{ni}(k) = \frac{1}{N_p}\sum_{n=0}^{N_p-1} |\tilde{r}(n,k) - \sum_{l=0}^{L-1} |\tilde{\xi}_l(k)|^2|^2 \tag{3.4}$$

The first-order filter with forgetting factor $\beta < 1$ is

$$\bar{I}_i(k) = \beta\bar{I}_i(k-1) + (1-\beta)I_{ni}(k) \tag{3.5}$$

Typical values of N_p, N_m and β are $N_p = 4$, $N_m = 10$ and $\beta = 0.999$.

Usually the instantaneous received signal power is assumed to contain white noise. The average interference plus noise power from the low-pass filter could be treated as a fixed quantity during one power control group (PCG). Then measurements of SIR can be assumed to contain white noise.

In reality, it may be difficult to obtain fast and accurate real-time estimate of SIR. There are some interesting approaches to this problem. In [64], the SIR estimation problem was studied based on a signal subspace method using the sample covariance matrix of the received signal. However, estimation of the SIR is not the focus of our research. The proposed stochastic power control scheme will make use of the SIR measurement mechanism within the 3-G wireless proposal and formulate the stochastic power control problem as a control system driven by white noise.

Reproduced with permission of the copyright owner. Further reproduction prohibited without permission.

3.2 Optimal Stochastic Power Control

In this section, the stochastic power control problem is formulated as a stochastic linear quadratic optimal control problem, where the system is driven by white noise. The solution of such problems can be found in [69].

Assume that the instantaneous received signal power $S_i(k)$ contains white noise, and the average interference plus noise power through the low pass filter is a deterministic quantity, then the stochastic measurements of SIR of user i at time instant k at the base station may be modeled as

$$y_i(k) = \gamma_i(k) + w_i(k) \tag{3.6}$$

where $y_i(k)$ is the measurement of the SIR, and $w_i(k)$ is a zero-mean, mutually uncorrelated stochastic process. Using the idea that the mobile's transmission power change is proportional to the SIR error, which we introduced in Chapter 2, the power update is given by

$$p_i(k+1) = p_i(k) + \alpha_i(k)[\gamma_i^{tar} - y_i(k)] \tag{3.7}$$

Using (3.6) and (3.7), we obtain that

$$p_i(k+1) = p_i(k) + \alpha_i(k)e_i(k) - \alpha_i(k)w_i(k) \tag{3.8}$$

where $e_i(k) = \gamma_i^{tar} - \gamma_i(k)$. Recall the definition of channel variation $\delta_i(k) = \frac{Lh_{ii}}{I_{ni}(k)}$, and $\gamma_i(k) = \delta_i(k)p_i(k)$. Using this expression while considering the SIR error evolution, we have

$$\begin{aligned} e_i(k+1) &= \gamma_i^{tar} - \gamma_i(k+1) \\ &= \gamma_i^{tar} - \delta_i(k+1)p_i(k+1) \\ &= \gamma_i^{tar} - \delta_i(k+1)p_i(k) - \delta_i(k+1)\alpha_i(k)e_i(k) \\ &\quad +\delta_i(k+1)\alpha_i(k)w_i(k) \end{aligned} \tag{3.9}$$

Combining equations (3.8) and (3.9), we obtain the following second-order dynamic system for the mobile's transmission power and the SIR error

$$\begin{bmatrix} p_i(k+1) \\ e_i(k+1) \end{bmatrix} = \begin{bmatrix} 1 & \alpha_i(k) \\ -\delta_i(k+1) & -\delta_i(k+1)\alpha_i(k) \end{bmatrix} \begin{bmatrix} p_i(k) \\ e_i(k) \end{bmatrix}$$

Reproduced with permission of the copyright owner. Further reproduction prohibited without permission.

$$+\begin{bmatrix} -\alpha_i(k) \\ \delta_i(k+1)\alpha_i(k) \end{bmatrix} w_i(k) + \begin{bmatrix} 0 \\ \gamma_i^{tar} \end{bmatrix} \tag{3.10}$$

Let $A_i(k)$, $G_i(k)$, and Γ_i denote the matrices in the above equation, then

$$A_i(k) = \begin{bmatrix} 1 & \alpha_i(k) \\ -\delta_i(k+1) & -\delta_i(k+1)\alpha_i(k) \end{bmatrix} \tag{3.11}$$

$$G_i(k) = \begin{bmatrix} -\alpha_i(k) \\ \delta_i(k+1)\alpha_i(k) \end{bmatrix} \tag{3.12}$$

$$\Gamma_i = \begin{bmatrix} 0 \\ \gamma_i^{tar} \end{bmatrix} \tag{3.13}$$

We introduce the state vector as

$$\mathbf{x}_i(k) = \begin{bmatrix} p_i(k) \\ e_i(k) \end{bmatrix} \tag{3.14}$$

Then equation (3.10) is simplified into

$$\mathbf{x}_i(k+1) = A_i(k)\mathbf{x}_i(k) + G_i(k)w_i(k) + \Gamma_i \tag{3.15}$$

Let the mean of $\mathbf{x}_i(k)$ be $\bar{\mathbf{x}}_i(k) = E\{\mathbf{x}_i(k)\}$ and the covariance matrix of $\mathbf{x}_i(k)$ be $Q_i(k) = var\{\mathbf{x}_i(k)\}$, which is a 2×2 matrix

$$E\{\mathbf{x}_i(k)\} = \bar{\mathbf{x}}_i(k) = \begin{bmatrix} \bar{p}_i(k) \\ \bar{e}_i(k) \end{bmatrix} \tag{3.16}$$

where $\bar{p}_i(k)$ and $\bar{e}_i(k)$ are the mean values of mobile's transmission power and SIR error, respectively. Suppose that

$$E\{\mathbf{x}_i(0)\} = \bar{\mathbf{x}}_i(0) = \begin{bmatrix} \bar{p}_i(0) \\ \bar{e}_i(0) \end{bmatrix} \tag{3.17}$$

It can be easily shown that the mean satisfies

$$E\{\mathbf{x}_i(k)\} = \bar{\mathbf{x}}_i(k) = \prod_{j=1}^{k} A_i(j)\bar{\mathbf{x}}_i(0) + \sum_{l=1}^{k-1}\prod_{j=1}^{l} A_i(k-j)\Gamma_i + \Gamma_i \tag{3.18}$$

Reproduced with permission of the copyright owner. Further reproduction prohibited without permission.

$w_i(k)$ is white noise with $E\{w_i(k)\} = 0$ and covariance $E\{w_i(k)w_i(n)\} = W\Delta(k-n)$, where W is the power spectrum density of w_i. $\Delta(k-n)$ is the Kronecker delta function defined by

$$\Delta(k-n) = \begin{cases} 1 & \text{k=n} \\ 0 & \text{otherwise} \end{cases} \tag{3.19}$$

The covariance of linear system (3.10) driven by white noise satisfies the Lypunov difference equation [69] assuming that the state and noise are independent (uncorrelated)

$$\begin{aligned}
&Q_i(k+1) = E\{(\mathbf{x}_i(k+1) - \bar{\mathbf{x}}_i(k+1))(\mathbf{x}_i(k+1) - \bar{\mathbf{x}}_i(k+1))^T\} \\
&= E\{[A_i(k)(\mathbf{x}_i(k) - \bar{\mathbf{x}}_i(k)) + G_i(k)w_i(k)][A_i(k)(\mathbf{x}_i(k) - \bar{\mathbf{x}}_i(k)) + G_i(k)w_i(k)]^T\} \\
&= A_i(k)E\{(\mathbf{x}_i(k) - \bar{\mathbf{x}}_i(k))(\mathbf{x}_i(k) - \bar{\mathbf{x}}_i(k))^T\}A_i^T(k) \\
&+A_i(k)E\{(\mathbf{x}_i(k) - \bar{\mathbf{x}}_i(k))(w_i(k))^T\}G_i^T(k) + G_i(k)E\{w_i(k)(\mathbf{x}_i(k) - \bar{\mathbf{x}}_i(k))^T\}A_i^T(k) \\
&+G_i(k)E\{w_i(k)(w_i(k))^T\}G_i^T(k) \\
&= A_i(k)Q_i(k)A_i^T(k) + G_i(k)WG_i^T(k)
\end{aligned} \tag{3.20}$$

Note that $Q_i(k) = Q_i^T(k) \geq 0$ (symmetric positive semidefinite for every k). Let us partition the 2×2 matrix Q (index i is dropped for simplicity) as

$$Q = Q^T = \begin{bmatrix} Q_{11} & Q_{12} \\ Q_{21} & Q_{22} \end{bmatrix} = \begin{bmatrix} Q_{11} & Q_{12} \\ Q_{12} & Q_{22} \end{bmatrix} \tag{3.21}$$

In view of (3.11)-(3.13) and (3.21), the Lyapunov equation (3.20) is partitioned as follows

$$Q_{11}(k+1) = Q_{11}(k) + 2\alpha_i(k)Q_{12}(k) + (\alpha_i(k))^2Q_{22}(k) + (\alpha_i(k))^2W \tag{3.22}$$

$$Q_{12}(k+1) = -\delta_i(k+1)[Q_{11}(k) + 2\alpha_i(k)Q_{12}(k) + (\alpha_i(k))^2Q_{22}(k) + (\alpha_i(k))^2W] \tag{3.23}$$

$$\begin{aligned}
Q_{22}(k+1) &= (\delta_i(k+1))^2[Q_{11}(k) + 2\alpha_i(k)Q_{12}(k) \\
&\quad +(\alpha_i(k))^2Q_{22}(k) + (\alpha_i(k))^2W]
\end{aligned} \tag{3.24}$$

From the above equations, we observe that for every user i

$$Q_{12}(k) = -\delta_i(k)Q_{11}(k) \quad , \quad \forall k \tag{3.25}$$

Reproduced with permission of the copyright owner. Further reproduction prohibited without permission.

$$Q_{22}(k) = (\delta_i(k))^2 Q_{11}(k) \quad , \quad \forall k \tag{3.26}$$

Define the performance criterion as the sum of the covariance of mobile's transmission power and the covariance of SIR error

$$J = [var(p_i(k+1)) + var(e_i(k+1))] \tag{3.27}$$

The optimal stochastic power control problem is to minimize J for every user i at every time step k by choosing the appropriate controller gain $\alpha_i(k)$

$$\min_{\alpha_i(k)} [var(p_i(k+1)) + var(e_i(k+1))] \tag{3.28}$$

with initial conditions given by

$$E\{\mathbf{x}_i(0)\} = \bar{\mathbf{x}}_i(0) = \begin{bmatrix} \bar{p}_i(0) \\ \bar{e}_i(0) \end{bmatrix} \tag{3.29}$$

and

$$var\{\mathbf{x}_i(0)\} = Q_i(0) \tag{3.30}$$

It is obvious that

$$\begin{aligned}
\min_{\alpha_i(k)} \quad & [var(p_i(k+1)) + var(e_i(k+1))] \\
\Leftrightarrow \quad & \min_{\alpha_i(k)} [Q_{11}(k+1) + Q_{22}(k+1)] \\
\Leftrightarrow \quad & \min_{\alpha_i(k)} \{(1 + (\delta_i(k+1))^2)[Q_{11}(k) + 2\alpha_i(k)Q_{12}(k) + (\alpha_i(k))^2 Q_{22}(k) \\
& +(\alpha_i(k))^2 W]\} \\
\Leftrightarrow \quad & \min_{\alpha_i(k)} [Q_{11}(k) + 2\alpha_i(k)Q_{12}(k) + (\alpha_i(k))^2 Q_{22}(k) + (\alpha_i(k))^2 W] \\
\Leftrightarrow \quad & \min_{\alpha_i(k)} [Q_{11}(k) - 2\alpha_i(k)\delta_i(k)Q_{11}(k) + (\alpha_i(k))^2(\delta_i(k))^2 Q_{11}(k) \\
& +(\alpha_i(k))^2(W + (\gamma_i^{tar})^2)] \\
\Leftrightarrow \quad & \min_{\alpha_i(k)} [(1 - \alpha_i(k)\delta_i(k))^2 Q_{11}(k) + (\alpha_i(k))^2(W + (\gamma_i^{tar})^2)] \\
\Leftrightarrow \quad & \min_{\alpha_i(k)} [(1 - \alpha_i(k)\delta_i(k))^2 Q_{11}(k)]
\end{aligned} \tag{3.31}$$

Using the nonnegative definite property of matrix Q ($Q_{11}(k) \geq 0$), it is easy to conclude that

$$\alpha_i^{opt}(k) = \frac{1}{\delta_i(k)} \tag{3.32}$$

Reproduced with permission of the copyright owner. Further reproduction prohibited without permission.

achieves the minimum of the criterion function.

After the optimal gain $\alpha_i^{opt}(k)$ is employed, the system matrix $A_i(k)$ becomes

$$A_i^{opt}(k) = \begin{bmatrix} 1 & \frac{1}{\delta_i(k)} \\ -\delta_i(k+1) & -\frac{\delta_i(k+1)}{\delta_i(k)} \end{bmatrix} \tag{3.33}$$

To examine the stability of this discrete time-varying system, we use the well known Lyapunov stability theory for time-varying systems, which can be found in [70, Chapter 23, pp. 438-439].

Theorem 3 *The system matrix under the optimal control $A_i^{opt}(k)$ is stable for all k.*

Proof: The linear state equation

$$x(k+1) = A(k)x(k) \quad , \quad x(k_0) = x_0 \tag{3.34}$$

is uniformly stable if there exists an $n \times n$ matrix sequence $R(k)$ that for all k is symmetric and such that

$$\eta I \leq R(k) \leq \rho I \tag{3.35}$$

$$A^T(k)R(k+1)A(k) - R(k) \leq 0 \tag{3.36}$$

where η and ρ are finite positive constants. It is easy to verify that the proposed optimal power control system is stable using the above stability criterion by taking

$$R(k) = \begin{bmatrix} \rho - \eta & \delta_i(k) \\ \delta_i(k) & 2 \end{bmatrix} \tag{3.37}$$

where η and ρ are finite positive constants satisfying

$$\rho \geq 2\eta \tag{3.38}$$

$$(\rho - 2\eta)(2 - \eta) \geq \max_k \delta_i^2(k) \tag{3.39}$$

$$-\eta(2 - \rho) \leq \min_k \delta_i^2(k) \tag{3.40}$$

$R(k)$ is a 2×2 symmetric matrix for all k. Firstly, let us check condition (3.35).

$$R(k) - \eta I = \begin{bmatrix} \rho - 2\eta & \delta_i(k) \\ \delta_i(k) & 2 - \eta \end{bmatrix} \tag{3.41}$$

Reproduced with permission of the copyright owner. Further reproduction prohibited without permission.

The above matrix is positive semidefinite if (3.38) and (3.39) are satisfied.

$$R(k) - \rho I = \begin{bmatrix} -\eta & \delta_i(k) \\ \delta_i(k) & 2-\rho \end{bmatrix} \tag{3.42}$$

The above matrix is negative semidefinite if (3.40) is satisfied. Secondly, check condition (3.36).

$$(A_i^{opt}(k))^T R(k+1) A_i^{opt}(k) - R(k) = \begin{bmatrix} 0 & \frac{\rho-\eta}{\delta_i(k)} - \frac{\delta_i(k)}{2} \\ \frac{\rho-\eta}{\delta_i(k)} - \frac{\delta_i(k)}{2} & \frac{\rho-\eta}{\delta_i^2(k)} - 2 \end{bmatrix} \tag{3.43}$$

It is obvious that the above matrix is negative semidefinite. Furthermore, conditions (3.38), (3.39) and (3.40) can be easily satisfied. Just choose η to be a very small positive number and choose ρ to be a very large positive number. ■

Let us examine the mean of the state under optimal controller gain $\alpha_i^{opt}(k)$. Replace $A_i(j)$ and $A_i(k-j)$ by $A_i^{opt}(j)$ and $A_i^{opt}(k-j)$ in equation (3.18), respectively. Note that $A_i^{opt}(j)A_i^{opt}(j-1) = 0$, $\forall j > 1$. Use this property, we get

$$\begin{aligned} E\{\mathbf{x}_i^{opt}(k)\} &= \bar{\mathbf{x}}_i^{opt}(k) = \prod_{j=1}^{k} A_i^{opt}(j)\bar{\mathbf{x}}_i(0) + \sum_{l=1}^{k-1}\prod_{j=1}^{l} A_i^{opt}(k-j)\Gamma_i + \Gamma_i \\ &= A_i^{opt}(k-1)\Gamma_i + \Gamma_i \\ &= \begin{bmatrix} \frac{\gamma_i^{tar}}{\delta_i(k-1)} \\ (1 - \frac{\delta_i(k)}{\delta_i(k-1)})\gamma_i^{tar} \end{bmatrix} \end{aligned} \tag{3.44}$$

We observe that when channel are relatively slow changing, i.e., when $\delta_i(k) \approx \delta_i(k-1)$, $E\{\gamma_i^{opt}(k)\} \approx \gamma_i^{tar}$.

The results in this section are summarized in the following theorem

Theorem 4 *Define the performance criterion at time instant k as*

$$J_i(k) = [var(p_i(k+1)) + var(e_i(k+1))] \ , \qquad \forall i \tag{3.45}$$

The optimal gains of the power control algorithm (3.7) that minimize $J_i(k)$ at every time instant k are

$$\alpha_i^{opt}(k) = \frac{1}{\delta_i(k)} \tag{3.46}$$

Reproduced with permission of the copyright owner. Further reproduction prohibited without permission.

The resulting optimal power control system is stable. The mean of the transmission power and SIR error under optimal control are

$$E\{\mathbf{x}_i^{opt}(k)\} = \begin{bmatrix} p_i^{opt}(k) \\ e_i^{opt}(k) \end{bmatrix} = \begin{bmatrix} \frac{\gamma_i^{tar}}{\delta_i(k-1)} \\ (1 - \frac{\delta_i(k)}{\delta_i(k-1)})\gamma_i^{tar} \end{bmatrix} \tag{3.47}$$

The covariance of the transmission power and SIR error under optimal control are

$$\begin{bmatrix} var\{p_i^{opt}(k)\} \\ var\{e_i^{opt}(k)\} \end{bmatrix} = \begin{bmatrix} \frac{W+(\gamma_i^{tar})^2}{\delta_i^2(k-1)} \\ \delta_i^2(k)\frac{W+(\gamma_i^{tar})^2}{\delta_i^2(k-1)} \end{bmatrix} \tag{3.48}$$

The minimal values of the performance criteria are

$$J_i^{opt}(k) = [1 + \delta_i^2(k+1)]Q_{11}^{opt}(k+1) \tag{3.49}$$

where

$$Q_{11}^{opt}(k+1) = \frac{W + (\gamma_i^{tar})^2}{\delta_i^2(k)} \tag{3.50}$$

The block diagram of the proposed power control scheme is shown in Figure 3.2.

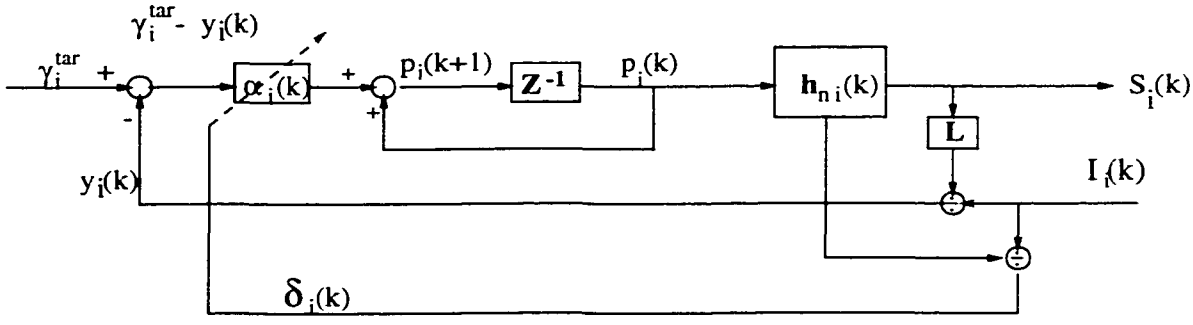

Figure 3.2: The optimal stochastic power control system

When the SIR measurement noise is Gaussian distributed, the above stochastic power control scheme is optimal because the state variables, SIR error and mobile's transmission power, are Gaussian distributed too. Hence the characteristics of them are decided completely by their mean and covariance.

Theorem 4 stated that when the SIR measurements contain white Gaussian noise, the optimal controller gain is equal to the reciprocal of the channel variation. We assume that the sum of a large number of interferers is relatively constant during one slot (0.625 ms).

Reproduced with permission of the copyright owner. Further reproduction prohibited without permission.

The performance of the proposed optimal stochastic power control scheme is tested through simulation. The same simulation environment as described in Section 2.5 is used here, with the white Gaussian noise process of SIR measurements. The white Gaussian noise w_i has zero mean and variance 0.15 dB.

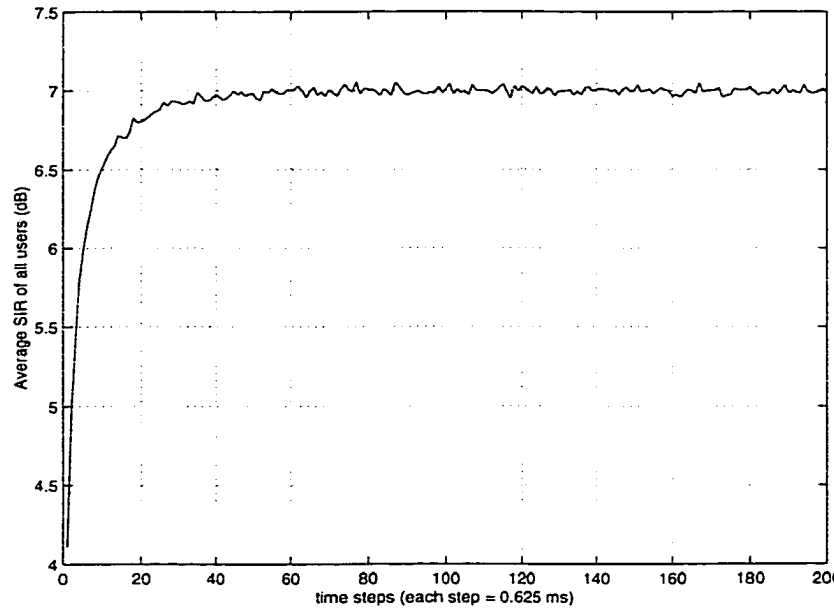

Figure 3.3: The average SIR of all users under optimal stochastic power control

The optimal stochastic power control scheme is applied. The average SIR is plotted in Figure 3.3, which is calculated as

$$\bar{\gamma}(k) = \frac{1}{N}\sum_{i=1}^{N}\gamma_i(k) \tag{3.51}$$

We observe that the SIRs converge to the target SIR as expected.

The transmission powers of users (only 3 of them are plotted) is shown in Figure 3.4. They converge to their deterministic value. The variance of transmit power is plotted as a function of time steps in Figure 3.5. We observe that the variance of transmit power decreases very fast with time, to about 10^{-5} within 100 steps (62.5 ms).

3.3 Extended Results and Analysis

In practical system implementation, in order to perform the proposed stochastic optimal power control scheme, the estimate of the channel variation is needed. Previous works

Reproduced with permission of the copyright owner. Further reproduction prohibited without permission.

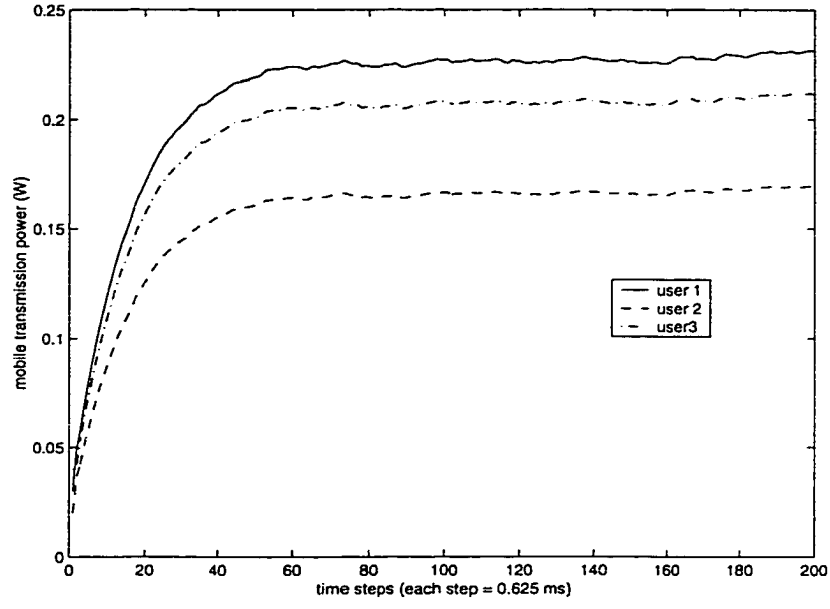

Figure 3.4: The transmission power of users under optimal stochastic power control

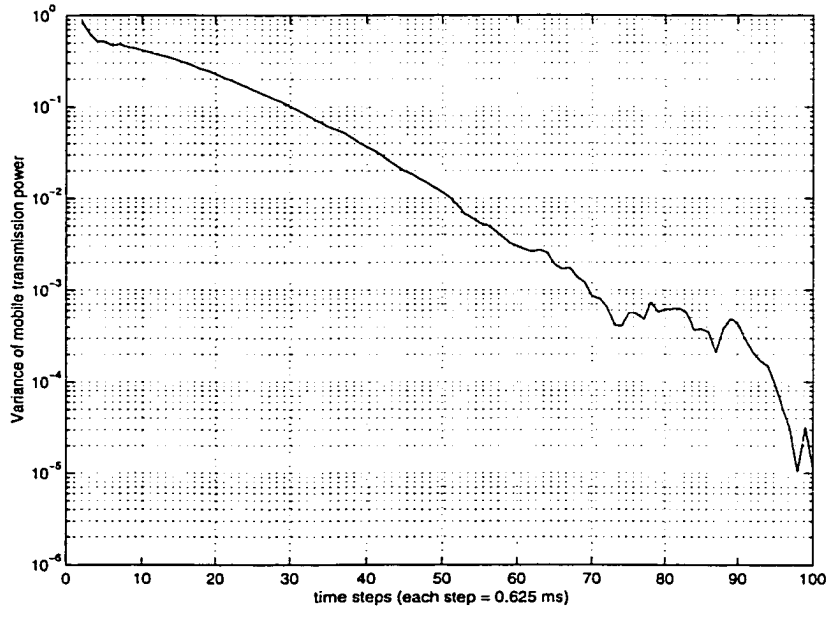

Figure 3.5: The covariance of mobile's transmission power under optimal stochastic power control

Reproduced with permission of the copyright owner. Further reproduction prohibited without permission.

using the Kalman filter to estimate/predict interference can be found in [30,65-67]. As described in Section 3.1, the instantaneous interference plus noise power at the base station receiver could be measured using pilot symbols and then averaged through a low-pass filter. Here we use the averaged interference plus noise power $\bar{I}_i(k)$ to calculate the channel variation.

3.3.1 Estimation based Stochastic Power Control

The dynamics of the channel variation is

$$\delta_i(k) = \delta_i(k-1) + w_i(k-1) \tag{3.52}$$

where $w_i(k)$ represents the process noise (disturbance) introduced by the link gain. Let $z_i(k)$ be the measurement of $\delta_i(k)$.

$$z_i(k) = \delta_i(k) + v_i(k) \tag{3.53}$$

where $v_i(k)$ is the measurement noise at the base station receiver. If we assume that $w_i(k)$ and $v_i(k)$ are Gaussian distributed, the Kalman filter may be employed to get the estimation of the channel variation. Assume that $w_i(k) \sim N(0, Q_i(k))$ and $v_i(k) \sim N(0, R_i(k))$, and they are uncorrelated. The proposed Kalman filter is given by

$$\hat{\delta}_i(k) = \hat{\delta}_i(k-1) + K^{\delta}(k)[z_i(k) - \hat{\delta}_i(k-1)] \tag{3.54}$$

where $K^{\delta}(k)$ is the Kalman filter gain, which is computed by

$$K^{\delta}(k) = \frac{P^{\delta}(k-1) + Q_i(k)}{P^{\delta}(k-1) + Q_i(k) + R_i(k)} \tag{3.55}$$

where $P^{\delta}(k)$ can be calculated iteratively as

$$P^{\delta}(k) = \frac{R_i(k)[P^{\delta}(k-1) + Q_i(k)]}{P^{\delta}(k-1) + Q_i(k) + R_i(k)} \tag{3.56}$$

The initial conditions are $E[\delta_i(0)] = \hat{\delta}_i(0)$, $E[\delta_i(0)^2] = P_0^{\delta}$.

The block diagram of the proposed power control scheme with an estimator is shown in Figure 3.6.

The estimator in the feedback loop could be the Kalman filter if the fluctuation of channel variation is Gaussian distributed. As pointed out in Chapter 2, in general

Reproduced with permission of the copyright owner. Further reproduction prohibited without permission.

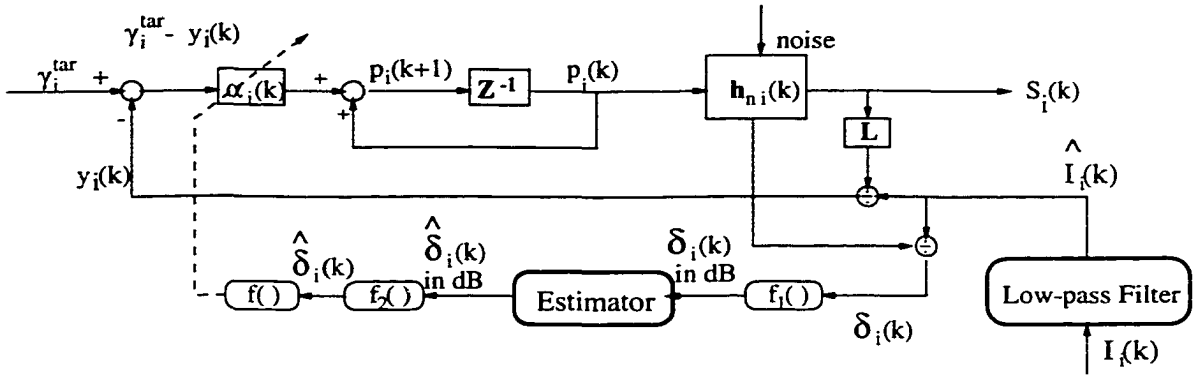

Figure 3.6: The optimal stochastic power control system

the fluctuation of channel variation is not Gaussian distributed. In that case, we will choose the H_∞ filter instead of Kalman filter.

By using the filtering technique, we obtain an estimator based controller, i.e.,

$$p_i(k+1) = p_i(k) + \hat{\alpha}_i(k)[\gamma_i^{tar} - y_i(k)] \tag{3.57}$$

where $\hat{\alpha}_i^{opt}(k) = 1/\hat{\delta}_i(k)$.

The simulation platform is the same as the one described in Section 3.5 with the white Gaussian noise process of SIR measurements. The stochastic power control with estimator is used. The parameters of the controller and the H_∞ filter remain the same as in Section 3.5. The white Gaussian noise w_i has zero mean and variance 0.15 dB.

To show the convergence of the users' SIRs to the target value, we ran the stochastic power control algorithm by using the Kalman filter and the H_∞ filter as estimators, respectively. The average SIR is plotted in Figure 3.7 and 3.8, which is defined in (3.48). We observe that the SIRs converge to the target SIR as expected in both cases.

The transmission powers of users (only 3 of them are plotted) are shown in Figure 3.9. They converge to the deterministic solutions. The variance of transmit power is plotted as a function of time steps in Figure 3.10. Again, we observe that the variance of transmit power decreases very fast with time, to about 10^{-5} within 100 steps (62.5 ms).

Figure 3.11 show the SIR performance of users under severe fading conditions. Applying a low-pass filter to the SIR measurements, we observe in Figure 3.12 that the

Reproduced with permission of the copyright owner. Further reproduction prohibited without permission.

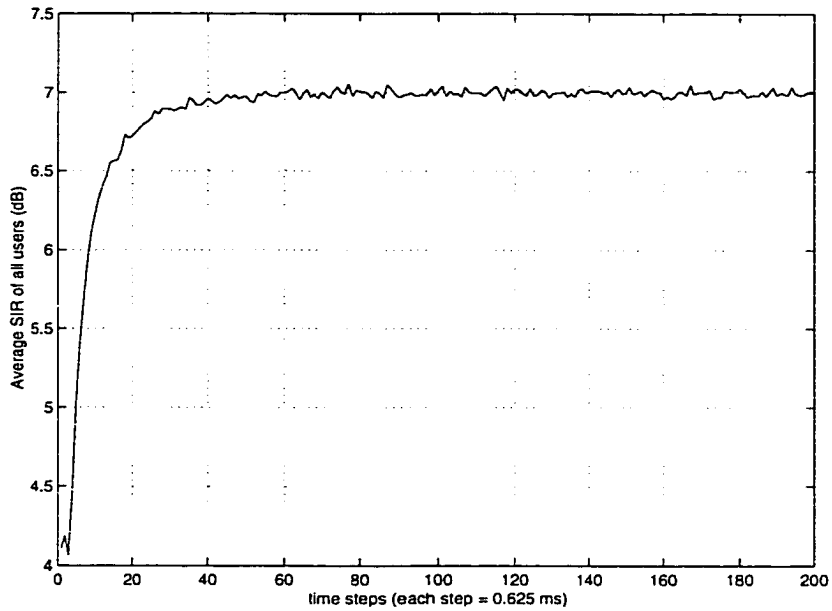

Figure 3.7: Average SIR of all the users using the Kalman filter

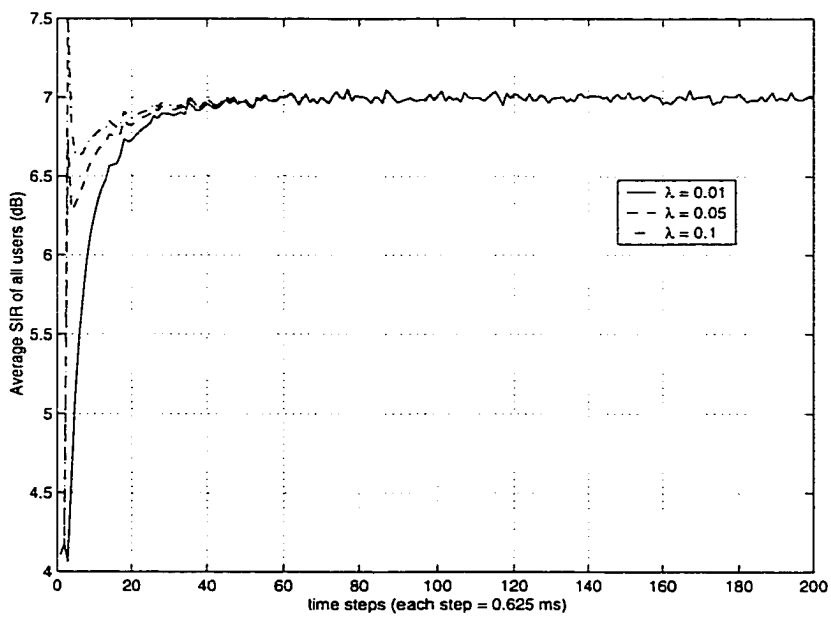

Figure 3.8: Average SIR of all the users using the H_∞ filter

Reproduced with permission of the copyright owner. Further reproduction prohibited without permission.

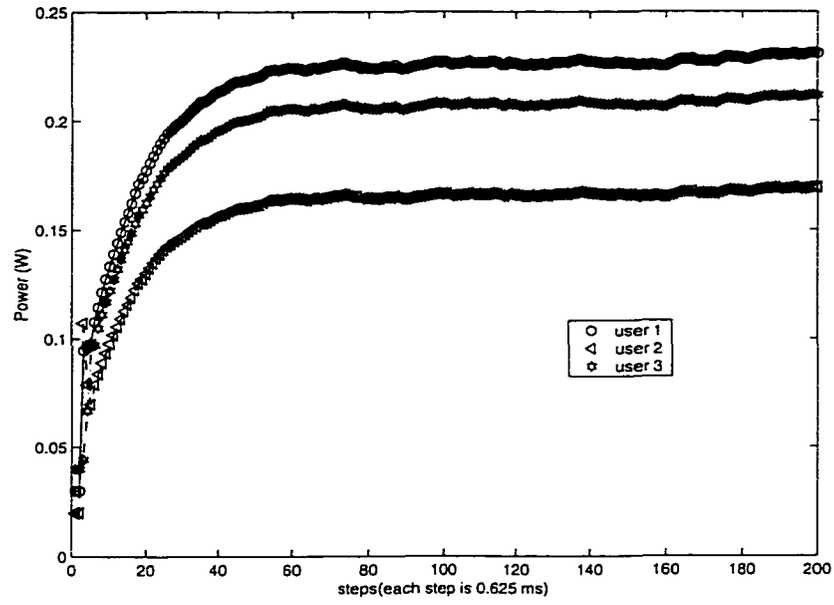

Figure 3.9: Transmission power of users

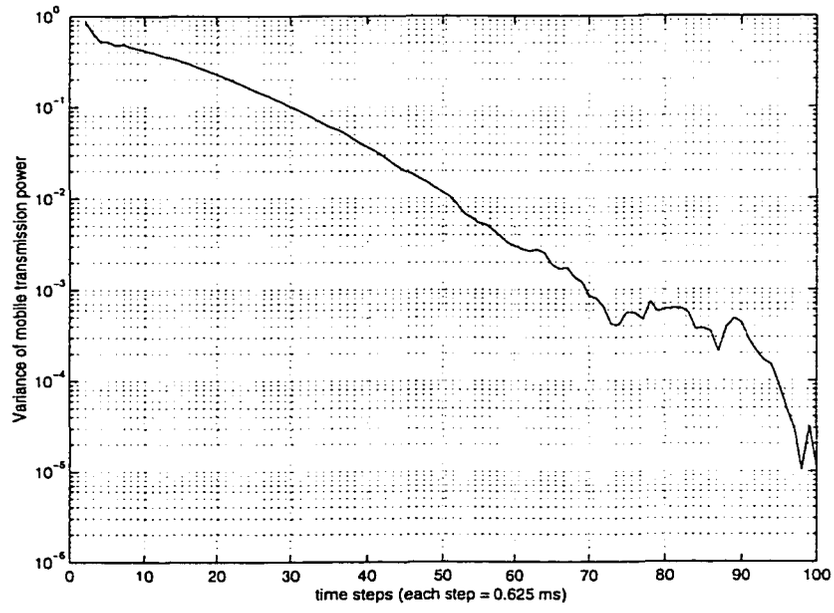

Figure 3.10: Variance of transmission powers

Reproduced with permission of the copyright owner. Further reproduction prohibited without permission.

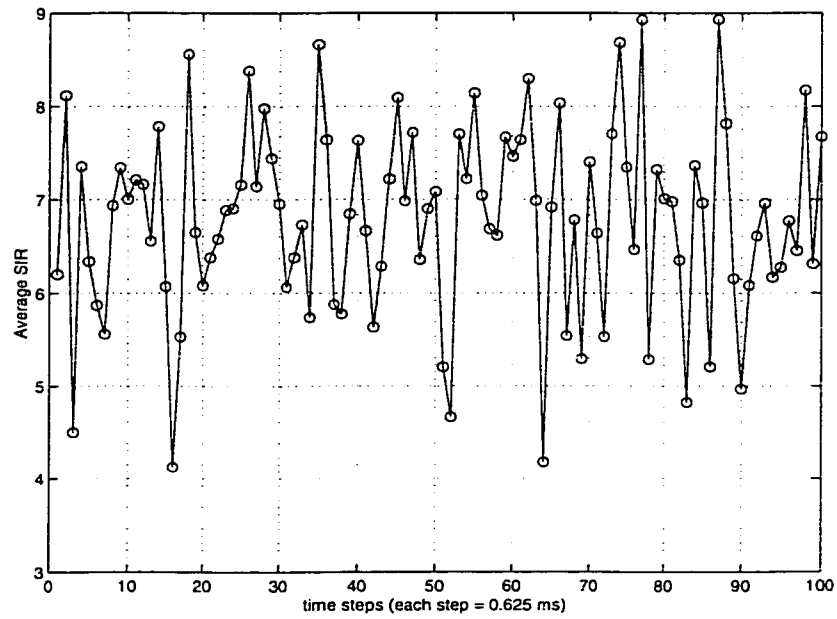

Figure 3.11: SIR performance when channel fading is severe

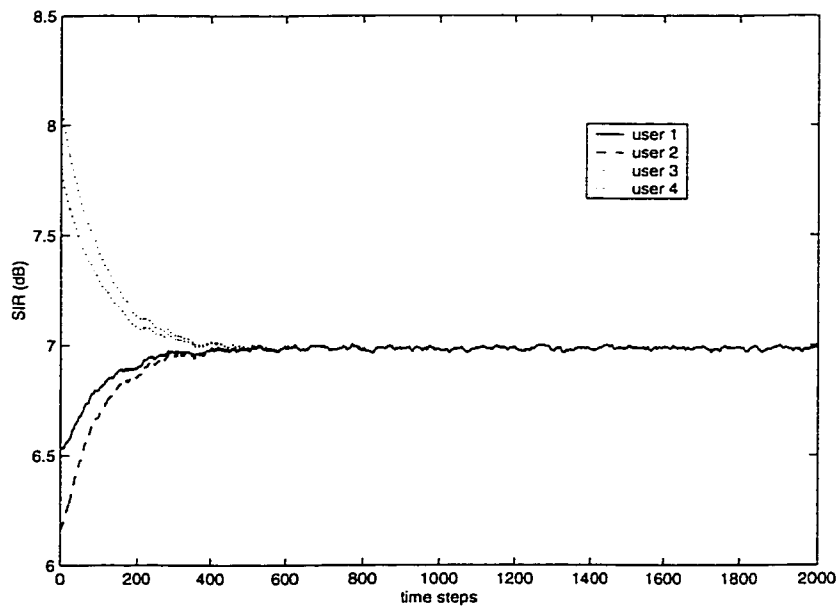

Figure 3.12: SIR performance by low-pass filter when channel fading is severe

Reproduced with permission of the copyright owner. Further reproduction prohibited without permission.

SIR performance of users is improved due to averaging. However, the response time is long.

3.3.2 Improvement by adding PD Controller

In order to reduce the overshoot of the proposed controller, we introduce a PD controller. It is well-known that PD controller will decrease the overshoot and improve the transient response. The block diagram of the proposed PD controller is shown in Figure 3.13.

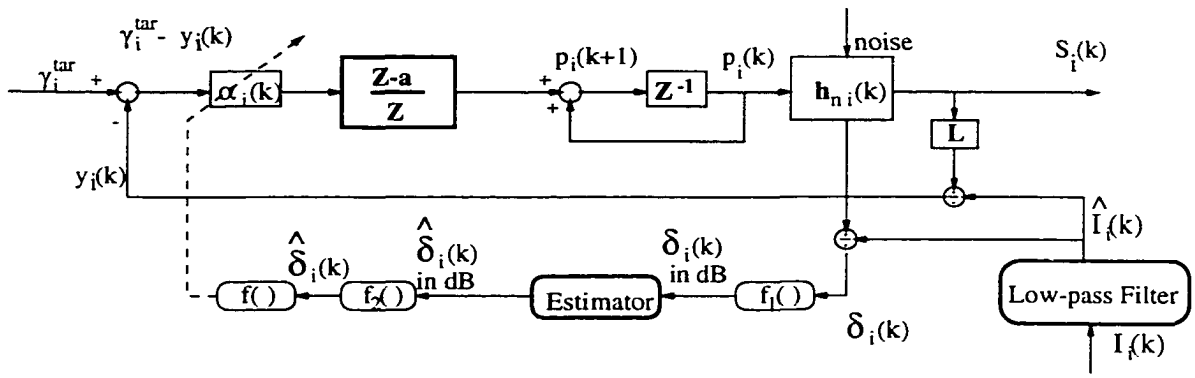

Figure 3.13: The proportional derivative controller

After applying the PD controller, we have an additional controller parameter a to tune. It is observed from Figure 3.12 that with $a = 0.15$ we get the best performance.

3.4 Effect of Quantization

As discussed in Chapter 2, the fixed-step power control algorithm can not be optimized for the time-varying channel, and will introduce constant power control error. In [32], the continuous value of mobile's transmission power is rounded to its discrete counterpart by either "ceiling" or "flooring". Step size constraints (0.5 dB or 1 dB) are not taken into consideration. A multi-step approach, called pulse-code-modulation (PCM) realization, is proposed in [68]. Simulations indicated that the multi-step approach achieves better performance than the fixed-step power control algorithm. Applying quantization on the proposed optimal power control command, we get a multi-step-like power control algorithm. If the number of the transmit power control (TPC) bits is n,

Reproduced with permission of the copyright owner. Further reproduction prohibited without permission.

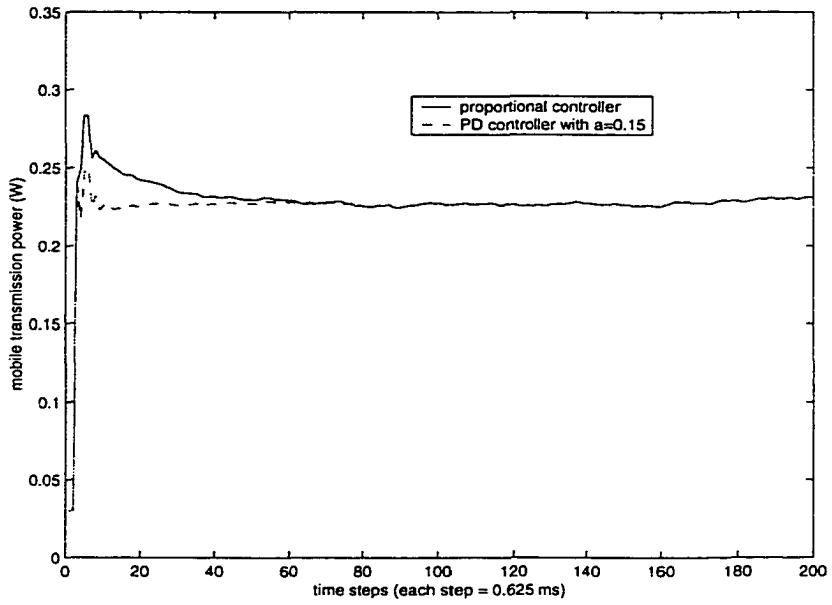

Figure 3.14: Transmission power of user 1 with added proportional derivative controller

then the number of the different power level is 2^n.

The performance of the proposed control scheme with 4-bit quantization is shown in Figure 3.15 and 3.16. The transmission power is rounded to the nearest power level. The performance of the proposed control scheme will not be affected too much with quantization. The SIR of the users is still converge to the desired target value.

In the current IS-95 system and CDMA-2000 system, power control bits (1 bit) is transmitted every slot with fixed step size(1 dB or 0.5 dB). In the proposed scheme, power control bits (4 bit) could be transmitted every 4 slots but with multiple step size (16 different step size). The power control performance will be improved due to the fast convergence of the proposed scheme and the ratio of information bits to power control bits remains unchanged.

3.5 Conclusions and Comments

The stochastic power control problem considered in [39] assumes that the matched filter output contains white Gaussian noise. A stochastic power control scheme is derived by using only average of the square of the matched filter output. In this research work,

Reproduced with permission of the copyright owner. Further reproduction prohibited without permission.

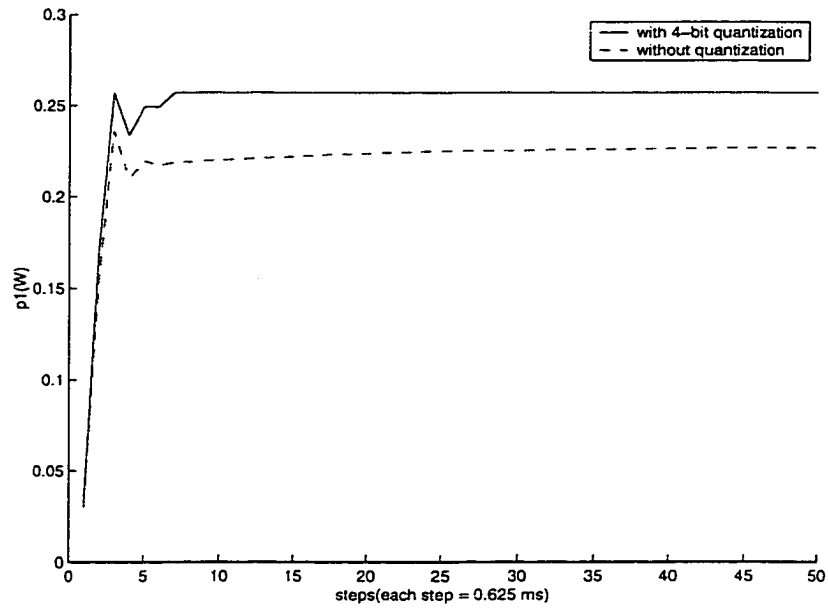

Figure 3.15: Transmission power of user 1 with/without quantization

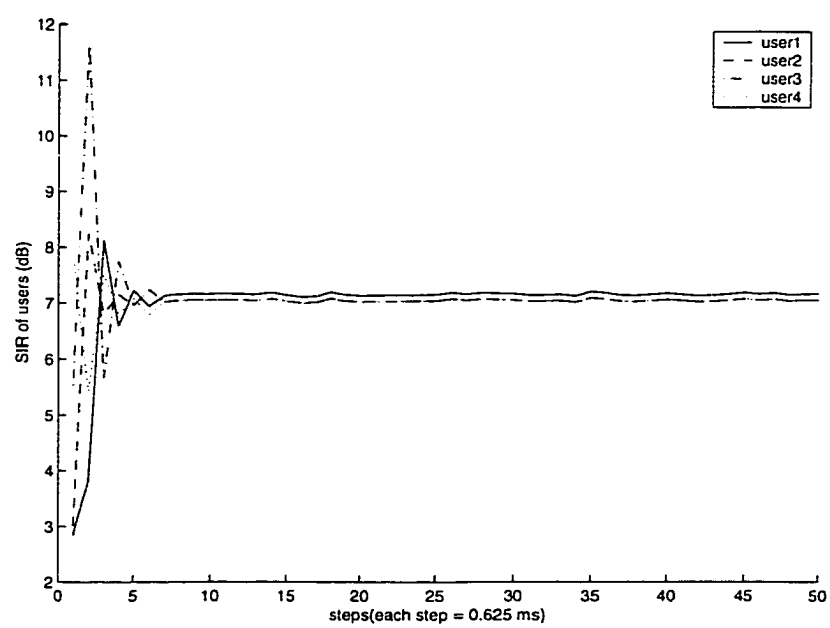

Figure 3.16: The SIR of users with quantization

Reproduced with permission of the copyright owner. Further reproduction prohibited without permission.

based on the SIR measurement mechanism for time-multiplexed pilot signal reported in 3-G wireless systems proposals [61-62], the SIR measurement is assumed to contain white Gaussian noise. Then an optimal stochastic power control scheme is obtained by minimizing the sum of the variance of mobile's transmission power and the variance of SIR error. Both schemes converge, however, the scheme proposed in this chapter has faster (typically in 20-50 steps) convergence speed than the one in [39] (typically in thousands of steps). In terms of complexity, the scheme proposed in this chapter needs an estimator to estimate the channel quality.

In practical situations, the noise within the SIR measurement may not be modeled as white Gaussian noise. Hence, the stochastic power control problem may be formulated as a linear quadratic control problem with the system driven by non-Gaussian noise, and the solution of such systems can be found in [71]. The stochastic power control scheme proposed in this section is sub-optimal in the sense that the higher-order moments are very small so that they will not affect the system performance much.

It may be desirable to get an estimate of the SIR rather than using the SIR measurement directly. However, since the dynamics of the SIR is not linear, the extended Kalman filter has to be used because the filtering problem becomes nonlinear [74].

In this chapter, in order to obtain the optimal solution of the stochastic power control problem analytically, only the SIR measurements are assumed to be stochastic. The link gains are assumed to be fixed during each Power Control Group (PCG) in both [39] and this chapter. In practice, however, because the propagation conditions change from time to time, the link gains are random processes. Hence the received power, interference and SIR are all random processes. It is very difficult to get analytical results of power control algorithms in such cases. In [73], only a 2-user case is considered where link gains are assumed to be varying with shadow fading effect. Multiuser case is only evaluated through simulation. In our extension of the optimal solution, an estimator is proposed to deal with the changing of the link gains. It estimates the channel quality in terms of channel variation at each Power Control Group (PCG) in real-time. Simulation results indicate the effectiveness of this scheme.

Reproduced with permission of the copyright owner. Further reproduction prohibited without permission.

Chapter 4

Preliminary Results on Noncooperative and Cooperative Power Control

Game theory approaches to power control problem in wireless systems have attracted a lot of attention of researchers recently. Power control problems for wireless systems have been studied in different formulations in [77-81]. In this chapter, we present some preliminary results on Nash and Pareto game problem formulations. Game theoretical approaches are applied to solve the power control problem for mobile users in both noncooperative and cooperative manner.

First, the distributed optimal power control problem is revisited from the noncooperative game theoretic point of view. Secondly, a Pareto strategy is applied to obtain the solution of the cooperative optimal power control problem by network level optimization.

4.1 Noncooperative Games: Nash Strategy

In a system with N users, the users share common resources of the system, for example, bandwidth, energy, etc. Each user i wants to optimize its own optimization objective J_i without care about the others, i.e., they behave in a noncooperative (greedy) manner. However, each user's performance will be decided by not only its own behavior but also all the other users' behavior. If conflict games have simultaneous decision making, solutions will comprise Nash strategies [82-83]. If conflict games have sequential decision making, solutions will comprise Stackelberg strategies [82-83].

Assume that all the mobile users update their transmission power simultaneously, then, the Nash strategy of the distributed power control problem is stated as follows:

Theorem 5 *Suppose that $p_i(k)$ is the transmission power of user i at time instant k,*

Reproduced with permission of the copyright owner. Further reproduction prohibited without permission.

and $e_i(k)$ is the SIR error defined by

$$e_i(k) = \gamma_i^{tar} - \gamma_i(k) \tag{4.1}$$

where γ_i^{tar} and $\gamma_i(k)$ are the SIR target and SIR for user i at time instant k, respectively. Denote the channel variation by $\delta_i(k)$ for user i at time instant k, then

$$\gamma_i(k) = \delta_i(k) p_i(k) \tag{4.2}$$

Each user has its own optimization objective $J_i(k)$, $i = 1, 2, ...N.$, $\forall k$

$$J_i(k) = \min_{\alpha_i(k)} [\rho_1 (e_i(k+1))^2 + \rho_2 (p_i(k+1))^2] \ , \quad i = 1, 2, ..., N. \ \ \forall k \tag{4.3}$$

where $\rho_1 > 0$ and $\rho_2 > 0$ are weighting parameters. Then, under simultaneous decision making, the Nash equilibrium point $(p_1^{Nash}, p_2^{Nash}, ..., p_N^{Nash})$ of this noncooperative game satisfy the following inequlities:

$$\begin{aligned}
J_1(p_1^{Nash}, p_2^{Nash}, ..., p_N^{Nash}) &\leq J_1(p_1, p_2^{Nash}, ..., p_N^{Nash}) \\
J_2(p_1^{Nash}, p_2^{Nash}, ..., p_N^{Nash}) &\leq J_1(p_1^{Nash}, p_2, ..., p_N^{Nash}) \\
&\vdots \\
J_N(p_1^{Nash}, p_2^{Nash}, ..., p_N^{Nash}) &\leq J_1(p_1^{Nash}, p_2^{Nash}, ..., p_N) \ \ \forall k
\end{aligned} \tag{4.4}$$

The solution of the Nash equilibrium point $(p_1^{Nash}, p_2^{Nash}, ..., p_N^{Nash})$ is given by

$$p_i^{Nash}(k+1) = \frac{\rho_1 \delta_i(k+1)}{\rho_1 (\delta_i(k+1))^2 + \rho_2} \gamma_i^{tar} \tag{4.5}$$

The values of the optimization objectives J_i, $i = 1, 2, ...N.$, at the Nash equilibrium point are

$$J_i^{Nash}(k) = \rho_1 (\gamma_i^{tar} - \gamma_i^{Nash}(k+1)) \gamma_i^{tar} \tag{4.6}$$

where

$$\gamma_i^{Nash}(k+1) = \delta_i(k+1) p_i^{Nash}(k+1) \tag{4.7}$$

Proof: The necessary conditions for the Nash equilibrium point are

$$\frac{\partial J_i(k)}{\partial p_i(k+1)} = 0 \quad i = 1, 2, ...N. \quad \forall k \tag{4.8}$$

Reproduced with permission of the copyright owner. Further reproduction prohibited without permission.

Performing the differentiation, we have

$$\rho_1(\gamma_i^{tar} - \gamma_i(k+1))\frac{\partial(\gamma_i^{tar} - \gamma_i(k+1))}{\partial p_i(k+1)} + \rho_2 p_i(k+1) = 0 \tag{4.9}$$

The solutions of the above equation yield the Nash equilibrium point

$$p_i^{Nash}(k+1) = \frac{\rho_1\delta_i(k+1)}{\rho_1(\delta_i)^2(k+1) + \rho_2}\gamma_i^{tar} \tag{4.10}$$

Consider the relation between the SIR and the channel variation, the Nash equilibrium point can be also written as

$$p_i^{Nash}(k+1) = \sqrt{\frac{\rho_1}{\rho_2}(\gamma_i^{tar} - \gamma_i(k+1))\gamma_i(k+1)} \quad if \quad \gamma_i(k+1) < \gamma_i^{tar} \tag{4.11}$$

The optimization objective can be calculated as

$$\begin{aligned} J_i^{Nash}(k) &= \rho_1(e_i^{Nash}(k+1))^2 + \rho_2(p_i^{Nash}(k+1))^2 \\ &= \rho_1(\gamma_i^{tar} - \gamma_i^{Nash}(k+1))^2 + \rho_2\frac{\rho_1}{\rho_2}(\gamma_i^{tar} - \gamma_i^{Nash}(k+1))\gamma_i^{Nash}(k+1) \\ &= \rho_1(\gamma_i^{tar} - \gamma_i^{Nash}(k+1))\gamma_i^{tar} \end{aligned} \tag{4.12}$$

■

The Nash equilibrium point given by (4.5) is the same as the optimal solution given by (2.50) in Theorem 2. This fact indicates that the distributed optimal power control scheme proposed in Chapter 2 is optimal in the noncooperative scenario.

4.2 Cooperative Games: Pareto Strategy

In this section, only two-user games are considered. Suppose each user has its own optimization objective J_i.

Both users can minimize their losses if they cooperate, and optimize $J = \lambda_1 J_1 + \lambda_2 J_2$, $\lambda_1 + \lambda_2 = 1$, where $\lambda_1, \lambda_2 > 0$. Two special cases are: If $\lambda_1 = 1$, $\lambda_2 = 0$, then $J = J_{1min}$. Similarly, if $\lambda_2 = 1$, $\lambda_1 = 0$, then $J = J_{2min}$.

The Pareto strategy is any strategy that minimize losses of both users, i.e.,

$$J_i(u_{Pareto}) \leq J_i(u), \quad i = 1, 2. \tag{4.13}$$

where u is the control variable and u_{Pareto} is the Pareto optimal solution. There are infinitely many Pareto strategies. Any strategy that brings the system on or above the

Reproduced with permission of the copyright owner. Further reproduction prohibited without permission.

$J_2 = f(J_1)$ curve and below $J_1 \leq J_{1N}$ and $J_2 \leq J_{2N}$. (J_{1N}, J_{2N}) is the Nash equilibrium point. Once we reach the curve $J_2 = f(J_1)$, we can no longer move any more without increasing one of the J_i. At this point we are done. The question of which point to choose on the $J_2 = f(J_1)$ curve leads to different strategies like P_{mm} (minimax Pareto strategies) and P_e (equalization Pareto strategies). The above ideas are illustrated in Figure 4.1.

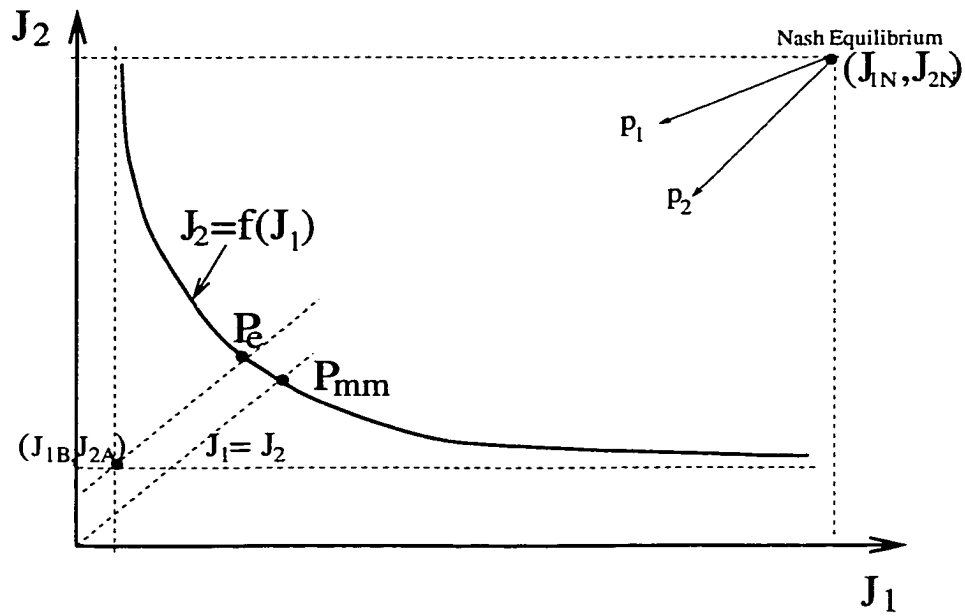

Figure 4.1: Pareto strategies of a two-user cooperative game

4.3 Pareto Optimal Solution of Network Level Optimization

Define the network level optimization problem as minimizing the following performance criterion

$$J(k) = min_{p_i}(\sum_{i=1}^{N} \lambda_i J_i(k)) \ , \qquad \forall k \tag{4.14}$$

where

$$\sum_{i=1}^{N} \lambda_i = 1 \tag{4.15}$$

$J_i(k)$ is defined in (4.3). In this case, all the users will cooperate and try to achieve the global optimum.

We will provide the solution of the two-user case here. The Pareto optimal solution for the two-user case is given in the following theorem

Reproduced with permission of the copyright owner. Further reproduction prohibited without permission.

Theorem 6 *In two-user case, the performance criterion for both users is*

$$\begin{aligned} J(k) &= min_{p_i}(\sum_{i=1}^{2} \lambda_i J_i(k)) \\ &= \lambda_1 J_1(k) + \lambda_2 J_2(k) \\ &= \lambda_1[e_1^2(k+1) + p_1^2(k+1)] + \lambda_2[e_2^2(k+1) + p_2^2(k+1)] \quad , \quad \forall k \end{aligned} \tag{4.16}$$

the optimal transmission power for user 1 in the Pareto sense is

$$p_1(k+1) = \frac{(\Psi_1)^{1/3}}{6\lambda_1 h_{21}} + \frac{2}{3}\Psi_2 - \frac{\sigma^2}{3h_{21}} \tag{4.17}$$

where (the index $k+1$ is dropped for simplicity)

$$\Psi_1 = \lambda_1^2(12h_{21}\sqrt{\Psi_3} + 36\sigma^2 h_{21}^2 \lambda_2 e_2 \gamma_2 + 72\sigma^2 h_{21}^2 \lambda_1 e_1 \gamma_1 - 8\sigma^6 \lambda_1) \tag{4.18}$$

$$\begin{aligned} \Psi_3 = \frac{1}{\lambda_1}(&12h_{21}^4 \lambda_2^3 e_2^3 \gamma_2^3 - 36h_{21}^4 \lambda_2^2 e_2^2 \gamma_2^2 \lambda_1 e_1 \gamma_1 - 3h_{21}^2 \lambda_2^2 e_2^2 \gamma_2^2 \sigma^4 \lambda_1 \\ &+36h_{21}^4 \lambda_2 e_2 \gamma_2 \lambda_1^2 e_1^2 \gamma_1^2 + 60h_{21}^2 \lambda_2 e_2 \gamma_2 \lambda_1^2 e_1 \gamma_1 \sigma^4 - 12h_{21}^4 \lambda_1^3 e_1^3 \gamma_1^3 \\ &+24h_{21}^2 \lambda_1^3 e_1^2 \gamma_1^2 \sigma^4 - 12\lambda_1^3 e_1 \gamma_1 \sigma^8) \end{aligned} \tag{4.19}$$

$$\Psi_2 = \frac{-3h_{21}^2 \lambda_2 e_2 \gamma_2 + 3h_{21}^2 \lambda_1 e_1 \gamma_1 + \sigma^4 \lambda_1}{h_{21}(\Psi_1)^{1/3}} \tag{4.20}$$

Proof: The necessary conditions of Pareto strategies are

$$\frac{\partial J(k)}{p_i(k+1)} = 0 \quad i = 1, 2, ...N. \quad \forall k \tag{4.21}$$

Take the partial derivative of J with respect to transmission power of user 1 gives that

$$\frac{\partial J(k)}{p_1(k+1)} = \lambda_1[\frac{-2e_1(k+1)\gamma_1(k+1)}{p_1(k+1)} + 2p_1(k+1)] + \lambda_2[\frac{2e_2(k+1)\gamma_2(k+1)h_{21}}{h_{21}p_1(k+1) + \sigma^2}] = 0 \tag{4.22}$$

Since $p_1(k+1)$, h_{21} and σ^2 are all positive quantities by definition, multiply $p_1(k+1)$ and $h_{21}p_1(k+1) + \sigma^2$ at both sides of the equation lead to

$$\begin{aligned} &\lambda_1 h_{21} p_1^3(k+1) + \lambda_1 \sigma^2 p_1^2(k+1) + (\lambda_2 e_2(k+1)\gamma_2(k+1) \\ &-\lambda_1 e_1(k+1)\gamma_1(k+1))h_{21}p_1(k+1) - \lambda_1 e_1(k+1)\gamma_1(k+1)\sigma^2 = 0 \end{aligned} \tag{4.23}$$

Reproduced with permission of the copyright owner. Further reproduction prohibited without permission.

Solve this algebraic equation using MAPLE©, we obtain one real solution and two complex conjugate solutions of $p_1(k+1)$, only the real solution is listed below (index k is omitted):

$$p_1 = \frac{(\Psi_1)^{1/3}}{6\lambda_1 h_{21}} + \frac{2}{3}\Psi_2 - \frac{\sigma^2}{3h_{21}} \tag{4.24}$$

where

$$\Psi_1 = \lambda_1^2(12h_{21}\sqrt{\Psi_3} + 36\sigma^2 h_{21}^2\lambda_2 e_2\gamma_2 + 72\sigma^2 h_{21}^2\lambda_1 e_1\gamma_1 - 8\sigma^6\lambda_1) \tag{4.25}$$

$$\begin{aligned}\Psi_3 = \frac{1}{\lambda_1}(&12h_{21}^4\lambda_2^3 e_2^3\gamma_2^3 - 36h_{21}^4\lambda_2^2 e_2^2\gamma_2^2\lambda_1 e_1\gamma_1 - 3h_{21}^2\lambda_2^2 e_2^2\gamma_2^2\sigma^4\lambda_1 \\ &+36h_{21}^4\lambda_2 e_2\gamma_2\lambda_1^2 e_1^2\gamma_1^2 + 60h_{21}^2\lambda_2 e_2\gamma_2\lambda_1^2 e_1\gamma_1\sigma^4 - 12h_{21}^4\lambda_1^3 e_1^3\gamma_1^3 \\ &+24h_{21}^2\lambda_1^3 e_1^2\gamma_1^2\sigma^4 - 12\lambda_1^3 e_1\gamma_1\sigma^8)\end{aligned} \tag{4.26}$$

$$\Psi_2 = \frac{-3h_{21}^2\lambda_2 e_2\gamma_2 + 3h_{21}^2\lambda_1 e_1\gamma_1 + \sigma^4\lambda_1}{h_{21}(\Psi_1)^{1/3}} \tag{4.27}$$

The results for user 2 could be obtained similarly. ■

The equalization Pareto strategy can be obtained by setting $\lambda_1 = \lambda_2$. On the other hand, the minimax Pareto strategy requires a search of the corresponding weighting parameters λ_1 and λ_2 such that $J_1 = J_2$. It is noticeable that the Pareto optimal solution seems extremly complicated under the current formulation. Another observation is that the predictions of the users' SIR are necessary to calculate the Pareto optimal power.

Reproduced with permission of the copyright owner. Further reproduction prohibited without permission.

Chapter 5

Conclusions

In this research work, the optimal solution to the power control problem for cellular wireless systems is presented. Unlike the multiplicative increase multiplicative decrease iterative algorithm or the up/down hard decision algorithm currently implemented in IS-95, this optimal power control scheme makes the power change proportional to the error between the actual SIR and the desired SIR. The proposed scheme also use an estimator to estimate and predict channel quality. It converges to the target SIR very fast.

In order to balance between the achievable QoS and the mobile's transmission power consumption, a joint optimization of mobile's transmission power and SIR error is performed. In addition to fast convergence, simulation results also indicate that the resulting controller is more efficient than the up/down algorithm of IS-95.

A stochastic optimal power control algorithm is obtained using the SIR measurements directly assuming that the SIR measurements contain white noise. The power control system is a linear time-varying system driven by white noise. The optimal controller gain is obtained by minimization of the sum of the variances of mobile's transmission power and SIR error. Simulation results show that the users' SIR converge to the target value within 40 steps.

Some preliminary results of game theoretic formulation of the power control problem are also discussed. Nash equilibrium points are derived for multi-user case and Pareto strategy is derived for two-user case. The distributed power control scheme obtained in Chapter 2 is proved to achieve the Nash equilibrium point of the system.

In practical situations, the channel quality changes due to fading and the link gains are random processes. Analytical result of power control algorithms for multi-user case

Reproduced with permission of the copyright owner. Further reproduction prohibited without permission.

may be an interesting topic for future research.

Another interesting topic for future research is to test the proposed power control schemes in this dissertation by performing experiments on the wideband CDMA testbed, for example, test the proposed power control schemes under different fading conditions in the Wippet [85].

Reproduced with permission of the copyright owner. Further reproduction prohibited without permission.

References

[1] F. Brock and B. Epstein, "Assignment of transmitter power control by linear programming," *IEEE Trans. Electromag. Compat.*, Vol. EMC-6, p.36, 1964.

[2] J. Zander, "Performance of optimum transmitter power control in cellular radio systems," *IEEE Trans. Veh. Technol.*, Vol.41, pp.57-62, Feb. 1992.

[3] J. Zander, "Distributed cochannel interference control in cellular radio systems," *IEEE Trans. Veh. Technol.*, Vol.41, pp.305-311, Aug. 1992.

[4] S. Grandhi, R. Vijayan, D. Goodman and J. Zander, "Centralized power control in cellular radio systems," *IEEE Trans. Veh. Technol.*, Vol.42, No.4, pp.466-468, Nov. 1993.

[5] S. Grandhi, R. Vijayan and D. Goodman, "Distributed power control in cellular radio systems," *IEEE Trans. Comm.*, Vol.42, No.2/3/4, pp.226-228, Feb/Mar/Apr. 1994.

[6] S. Grandhi, J. Zander and R. Yates, "Constrained power control," *Wireless Personal Communications*, Vol.1, pp.257-270, 1995.

[7] G.J. Foschini and Z. Miljanic, "A simple distributed autonomous power control algorithm and its convergence," *IEEE Trans. Veh. Technol.*, Vol.42, No.4, pp.641-646, Nov. 1993.

[8] G.J. Foschini and Z. Miljanic, "Distributed autonomous wireless channel assignment algorithm with power control," *IEEE Trans. Veh. Technol.*, Vol.44, No.3, pp.420-429, Aug. 1995.

[9] D. Mitra, "An asynchronous distributed algorithm for power control in cellular radio systems," *Proc. 4th WINLAB Workshop of 3rd Generation wireless Information Networks*, pp.177-186, NJ, Oct. 1993.

[10] R. Yates, "A framework for uplink power control in cellular radio systems," *IEEE J. Select. Areas Commun.*, Vol.13, No.7, pp.1341-1347, Sep. 1995.

[11] R. Yates and C.Y. Huang, "Integrated power control and base station assignment," *IEEE Trans. Veh. Technol.*, Vol.44, No.3, pp.638-644, Aug. 1995.

[12] N. Bambos and G.J. Pottie, "On the maximum capacity of power-controlled cellular networks," Wireless communications: future directions, ed. by J. Holtzman and D. Goodman, pp.275-288, 1993.

[13] D. Mitra and J.A. Morrison, "A distributed power control algorithm for bursty transmissions on cellular spread spectrum wireless networks," Wireless information networks, ed. by J. Holtzman, pp.201-212, 1996.

Reproduced with permission of the copyright owner. Further reproduction prohibited without permission.

[14] S.V. Hanly, "Information capacity of radio networks," Ph.D. Thesis, Department of Mathematics, Cambridge University, Aug. 1993.

[15] S.V. Hanly, "An algorithm for combined cell-site selection and power control to maximize cellular spread spectrum capacity," *IEEE J. Select. Areas Commun.*, Vol.13, No.7, pp.1332-1340, 1995.

[16] S.V. Hanly and D. Tse, "Power control and capacity of spread spectrum wireless networks," *Automatica*, Vol.35, pp.1987-2012, Dec. 1999.

[17] J.D. Herdtner and E.K.P. Chong, "Analysis of a class of distributed asynchronous power control algorithms for cellular wireless systems," *IEEE J. Select. Areas Commun.*, Vol.18, No.3, pp.436-446, Mar. 2000.

[18] A.J. Viterbi, A.M. Viterbi and E. Zehavi, "Performance of power-controlled wideband terrestrial digital communication," *IEEE Trans. Comm.*, Vol.41, No.4, pp.559-569, Apr. 1993.

[19] A.M. Viterbi and A.J. Viterbi, "Erlang capacity of a power controlled CDMA system," *IEEE J. Select. Areas Commun.*, Vol.11, No.6, pp.892-900, Aug. 1993.

[20] S. Ariyavisitakul and L.F. Chang, "Signal and interference statistics of a CDMA system with feedback power control," *IEEE Trans. Comm.*, Vol.41, No.11, pp.1626-1634, Nov. 1993.

[21] S. Ariyavisitakul, "Signal and interference statistics of a CDMA system with feedback power control - part II," *IEEE Trans. Comm.*, Vol.42, No.2-4, pp.597-605, Feb-Apr. 1994.

[22] Q. Wu, "Performance of optimum transmitter power control in CDMA cellular mobile systems," *IEEE Trans. Veh. Technol.*, Vol.48, No.2, pp.571-575, Mar. 1999.

[23] M.L. Sim, E. Gunawan, B. Soong and C. Soh, "Performance study of close-loop power control algorithms for a cellular CDMA system," *IEEE Trans. Veh. Technol.*, Vol.48, No.3, pp.911-921, May. 1999.

[24] Q. Shen and W.A. Krzymien, "Optimum power assignment for maximum throughput in CDMA personal communication systems with intergrated voice/data traffic," *Wireless Personal Communications*, Vol.8, pp.277-289, 1998.

[25] F. Rashid-Farrokhi, L. Tassiulas and K.J.R. Liu, "Joint optimal power control and beamforming in wireless networks using antenna arrays," *IEEE Trans. Comm.*, Vol.46, No.10, pp.1313-1324, Oct. 1998.

[26] L. Song, N. Mandayam and Z. Gajic, "Analysis of an Up/Down power control algorithm for CDMA reverse link: A nonlinear control system approach," Conference on Information Sciences and Systems, pp.119-124, Mar. 1999.

[27] L. Song, N. Mandayam and Z. Gajic, "Analysis of an Up/Down power control algorithm in CDMA reverse link under fading condition," Proc. of Allerton Conference, pp.475-484, Aug. 1999.

Reproduced with permission of the copyright owner. Further reproduction prohibited without permission.

[28] F. Gunnarsson, F. Gustafsson and J. Blom, "Improved performance using non-linear components in power control algorithms," Vehicular Technology Conference, pp.1276-1280, Sep. 1999.

[29] F. Gunnarsson, F. Gustafsson and J. Blom, "Pole placement design of power control algorithms," Vehicular Technology Conference, pp.2149-2153, Sep. 1999.

[30] K.K. Leung, "A Kalman-filter method for power control in broadband wireless networks," IEEE Infocom'99, pp.948-956, New York, NY, Mar.1999.

[31] Z. Rosberg and J. Zander, "Toward a framework for power control in cellular systems," *Wireless Networks*, Vol.4, pp.215-222, 1998.

[32] M. Andersin, Z. Rosberg and J. Zander, "Distributed discrete power control in cellular PCS," *Wireless Personal Communications*, Vol.6, pp.211-231, 1998.

[33] N. Bambos, "Toward power-sensitive network architectures in wireless communications: concepts, issues and design aspects," *IEEE Personal Communications*, Vol.5, pp.50-59, 1998.

[34] TIA/EIA Interim Standard-95: Mobile station-base station compatibility standard for dual-mode wideband spread spectrum cellular system, TIA, 1993.

[35] TIA/EIA Interim Standard-95B: Mobile station-base station compatibility standard for dual-mode wideband spread spectrum cellular system, TIA, 1998.

[36] ITU, RTT 45.5, CDMA 2000 standard.

[37] K.S. Gilhousen, I.M. Jacobs, R. Padovani, A.J. Viterbi, L.A. Weaver and C.E. Wheatley, "On the capacity of a cellular CDMA system," *IEEE Trans. Veh. Technol.*, Vol.40, No.2, pp.303-312, May. 1991.

[38] R. Jantti and S.L. Kim, "Second-Order power control with asymptotically fast convergence," *IEEE J. Select. Areas Commun.*, Vol.18, No.3, pp.447-457, Mar. 2000.

[39] S. Ulukus and R.D. Yates, "Stochastic power control for cellular radio systems," *IEEE Trans. Comm.*, Vol.46, No.6, pp.784-798, June 1998.

[40] K. Zhou, J.C. Doyle and K. Glover, *Robust and Optimal Control*, Prentice-Hall, 1995.

[41] D.S. Bernstein and W.M. Haddad, "Steady-State Kalman Filtering with an H_∞ Error Bound," *Systems and Control Letters*, Vol.12, pp.9-16, 1989.

[42] K.M. Nagpal and P.P. Khargonekar, "Filtering and Smoothing in an H_∞ Setting," *IEEE Tran. on AC*, Vol.36, No.2, pp.152-166, Feb. 1991.

[43] X. Shen and L. Deng, "Game Theory Approach to Discrete H_∞ Filter," *IEEE Tran. on Signal Processing*, Vol.45, No.4, pp.1092-1095, Apr. 1997.

[44] U. Shaked and Y. Theodor, "H_∞ -Optimal Estimation: A Tutorial," *Proc. 31st Conference on Decision and Control*, Tucson, Arizona, pp.2278-2286, Dec. 1992.

Reproduced with permission of the copyright owner. Further reproduction prohibited without permission.

[45] M.S. Bazaraa and C.M. Shetty, *Nonlinear Programming - Theory and Algorithms*, John Wiley & Sons, 1979.

[46] D.E. Kirk, *Optimal Control Theory: An Introduction*, Prentice-Hall, 1970.

[47] S.V. Hanly, "Congestion measures in DS-CDMA networks," *IEEE Trans. Comm.*, Vol.47, No.3, pp.426-437, Mar. 1999.

[48] G. Stuber, *Principles of Mobile Communication*, Kluwer Academic Publishers, 1996.

[49] M. Sim, E. Gunawan, C. Soh and B. Soong, "Characteristics of closed loop power control algorithms for a cellular DS/CDMA system," *IEE Proc. Comm.*, Vol.145, No.5, pp.355-362, Oct. 1998.

[50] K. Sipila, J. Laiho-steffens, A. Wacker and M. Jasberg, "Modeling the impact of the fast power control on the WCDMA uplink," Vehicular Technology Conference, pp.1266-1270, Sep. 1999.

[51] S. Choe, T. Chulajata, H. Kwon, B. Koh and S. Hong, "Linear prediction at base station for closed loop power control," Vehicular Technology Conference, pp.1469-1473, Sep. 1999.

[52] S. Oh, T. Olsen and K. Wasserman, "Distributed power control and spreading gain allocation in CDMA data networks," IEEE INFOCOM, Vol.2, pp.379-385, Mar. 2000.

[53] A. Lozano and D. Cox, "Integrated dynamic channel assignment and power control in TDMA mobile wireless communication systems," *IEEE J. Select. Areas Commun.*, Vol.17, No.11, pp.2031-2040, Nov. 1999.

[54] N. Feng, N. Mandayam and D. Goodman, "Joint power and rate optimization for wireless data services based on utility functions," Conference on Information Sciences and Systems, pp.149-153, Mar. 1999.

[55] S. Kim, Z. Rosberg and J. Zander, "Combined power control and transmission rate selection in cellular networks," Vehicular Technology Conference, Vol.3, pp. 1653 -1657, Sep. 1999.

[56] F. Priscoli and F. Sestini, "Effects of imperfect power control and user mobility on a CDMA cellular network," *IEEE J. Select. Areas Commun.*, Vol.14, No.9, pp.1809-1817, 1996.

[57] R. Cameron and B. Woerner, "Performacne analysis of CDMA with imperfect power control," *IEEE Trans. Comm.*, Vol.44, No.7, pp.777-781, Jul. 1996.

[58] G. Corazza, G. De Maio and F. Vatalaro, "CDMA cellular systems performance with fading, shadowing, and imperfect power control," *IEEE Trans. Veh. Technol.*, Vol.47, No.2, pp.450-459, May. 1998.

[59] L. Qian and Z. Gajic, "Feasibility Conditions of SIR-based Power Control in TDMA Wireless Systems," *Conference on Information Sciences and Systems 2000*, WA2, pp.19-24, Princeton, NJ, Mar. 2000.

Reproduced with permission of the copyright owner. Further reproduction prohibited without permission.

[60] M. Almgren, H. Andersson and K. Wallstedt, "Power Control in a Cellular System," *Vehicular Technology Conference*, pp. 833-837, Oct. 1994.

[61] F. Adachi, M. Sawahashi and H. Suda, "Wideband DS-CDMA for Next-Generation Mobile Communications Systems," *IEEE Comm. Magazine*, Vol.36, pp.56-69, Sep. 1998.

[62] E. Dahlman, B. Gudmundson, M. Nilsson and J. Skold, "UMTS/IMT-2000 Based on Wideband CDMA," *IEEE Comm. Magazine*, Vol.36, pp.70-80, Sep. 1998.

[63] A.J. Viterbi, *CDMA: Principles of Spread Spectrum Communication*, Addison-Wesley, June 1995.

[64] D. Ramakrishna, N. Mandayam and R. Yates, "Subspace Based Estimation of the Signal-to-Interference Ratio for CDMA Cellular Systems," *Proc. IEEE 47th Vehicular Technology Conference*, pp.735-739, Phoenix, AZ, May, 1997.

[65] K.K. Leung, "Power control by Kalman filter with error Margin for Wireless IP Networks," *IEEE Wireless Communications and Networking Conference*, Vol.3, pp.980-985, Chicago, IL, Sep. 2000.

[66] K.K. Leung, "Power Control by Interference Predictions for Wireless IP Networks," preprint.

[67] K.K. Leung and L. Wang "Controlling QoS by integrated power control and link adaptation in broadband wireless networks," *European Trans. Telecommunications*, Vol.11, pp.383-394, Jul-Aug, 2000.

[68] C. Chang, J. Lee and F. Ren, "Design of power control mechanisms with PCM realization for the uplink of a DS-CDMA cellular mobile radio system," *IEEE Trans. Veh. Technol.*, Vol.45, No.3, pp.522-530, Aug. 1996.

[69] H. Kwakernaak and R. Sivan, *Linear Optimal Control Systems*, Wiley, 1972.

[70] W.J. Rugh, *Linear System Theory*, 2nd Ed., Prentice-Hall, 1996.

[71] A. Germani and G. Mavelli, "Optimal quadratic solution for the non-Gaussian finite-horizon regulator problem," *Systems & Control Letters*, Vol.38, pp.321-331, 1999.

[72] S. Seo, T. Dohi and F. Adachi, "SIR-based transmit power control of reverse link for coherent DS-CDMA mobile radio," *IEICE Trans. Commun.*, Vol.E81-B, No.7, pp.1508-1516, Jul. 1998.

[73] C.W. Sung and W.S. Wong, "Performance of a cooperative algorithm for power control in cellular systems with a time-varying link gain matrix," *Wireless Networks*, Vol.6, pp.429-439, 2000.

[74] M. Grewal and A. Andrews, *Kalman Filtering - Theory and Practice*, Prentice-Hall, NJ, 1993.

[75] L. Qian and Z. Gajic, "Optimal Distributed Power Control in Cellular Wireless Systems," *Proc. Allerton Conference*, Vol.1, pp. 393-402, Oct. 2000.

Reproduced with permission of the copyright owner. Further reproduction prohibited without permission.

[76] L. Qian and Z. Gajic, "Joint Optimization of Mobile's Transmission Power and SIR Error in CDMA Systems," *ACC 2001*, to appear.

[77] H. Ji and C. Huang, "Non-cooperative uplink power control in cellular radio systems," *Wireless Networks*, Vol.4, No.3, pp. 233-240, 1998.

[78] D. Famolari, N. Mandayam, D. Goodman and V. Shah, "A New Framework for Power Control in Wireless Data Networks: Games, Utility and Pricing," *WIRELESS MULTIMEDIA NETWORK TECHNOLOGIES*, Kluwer Academic Publishers, Editors: Ganesh, Pahlavan, Zvonar, pp. 289-310, 1999.

[79] C. Saraydar, N. Mandayam and D. Goodman, "Pricing and Power Control in a Multicell Wireless Data Network," *Submitted to IEEE J. Select. Areas Commun.*, Dec. 2000.

[80] C. Saraydar, N. Mandayam and D. Goodman, "Efficient Power Control via Pricing in Wireless Data Networks," *Submitted to IEEE Trans. on Communications*, 2000.

[81] H. Wang, N. Mandayam, D. Goodman and P. Ligdas, "Dynamic utility maximization for mobile data communications under delay constraints," *IEEE Vehicular Technology Conference 2000*, Vol.3, pp. 2113-2117, 2000.

[82] T. Basar and G. Olsder, *Dynamic Noncooperative Game Theory*, Academic Press, London/New York, 1995.

[83] G. Owen, *Game Theory*, 2nd ed., Academic Press, New York, 1982.

[84] T. Kailath, A. Sayed and B. Hassibi, *Linear Estimation*, Prentice-Hall, NJ, 2000.

[85] J. Panchal, *Wippet: Wireless propagation and protocol evaluation testbed*, Master thesis, Department of Electrical and Computer Engineering, Rutgers-The State University of New Jersey, New Brunswick, NJ, 1998.

Reproduced with permission of the copyright owner. Further reproduction prohibited without permission.

Appendix

Reproduced with permission of the copyright owner. Further reproduction prohibited without permission.

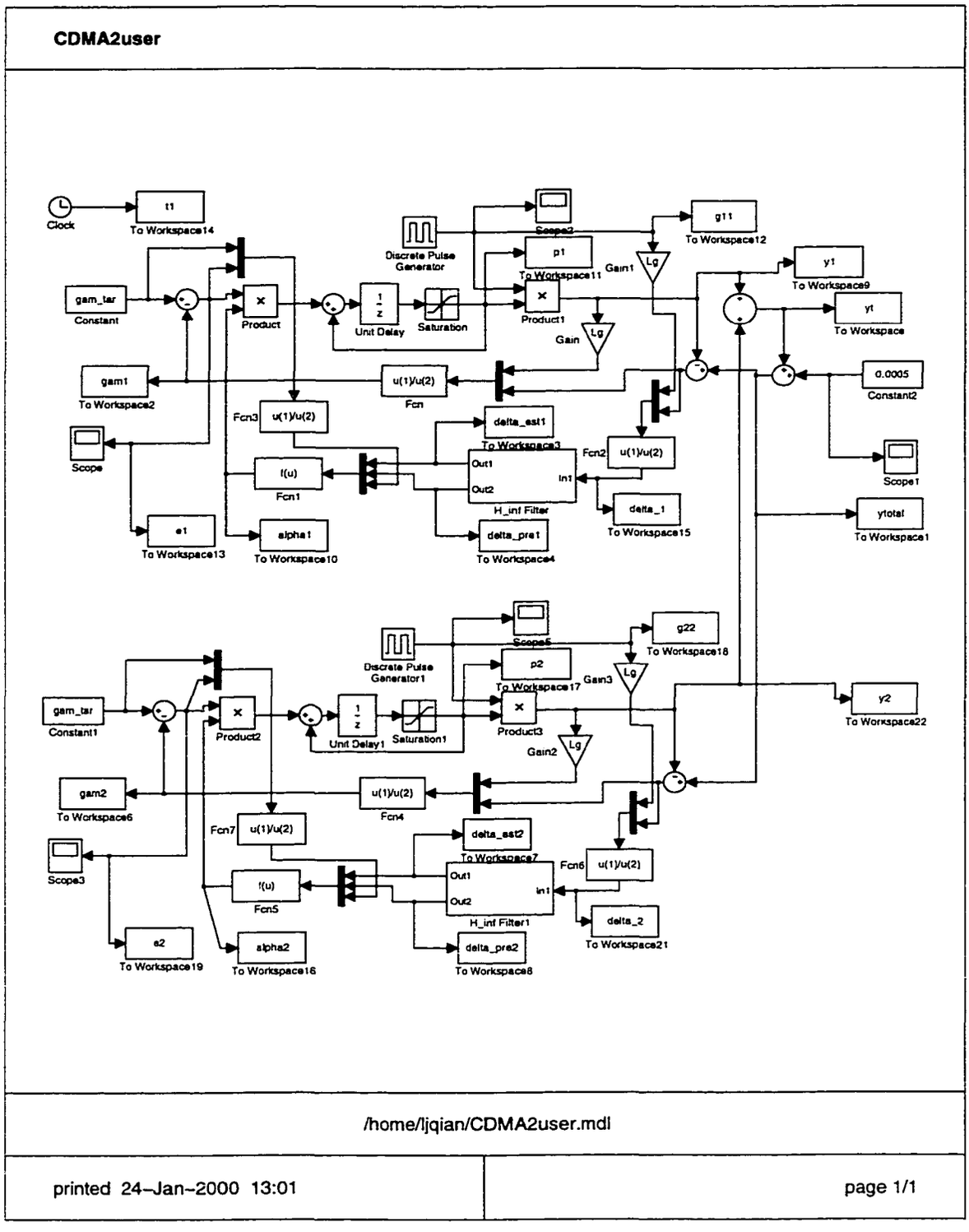

Figure A.1: SIMULINK Model: The optimal distributed fast closed-loop SIR-based power control scheme (2-user case)

Reproduced with permission of the copyright owner. Further reproduction prohibited without permission.

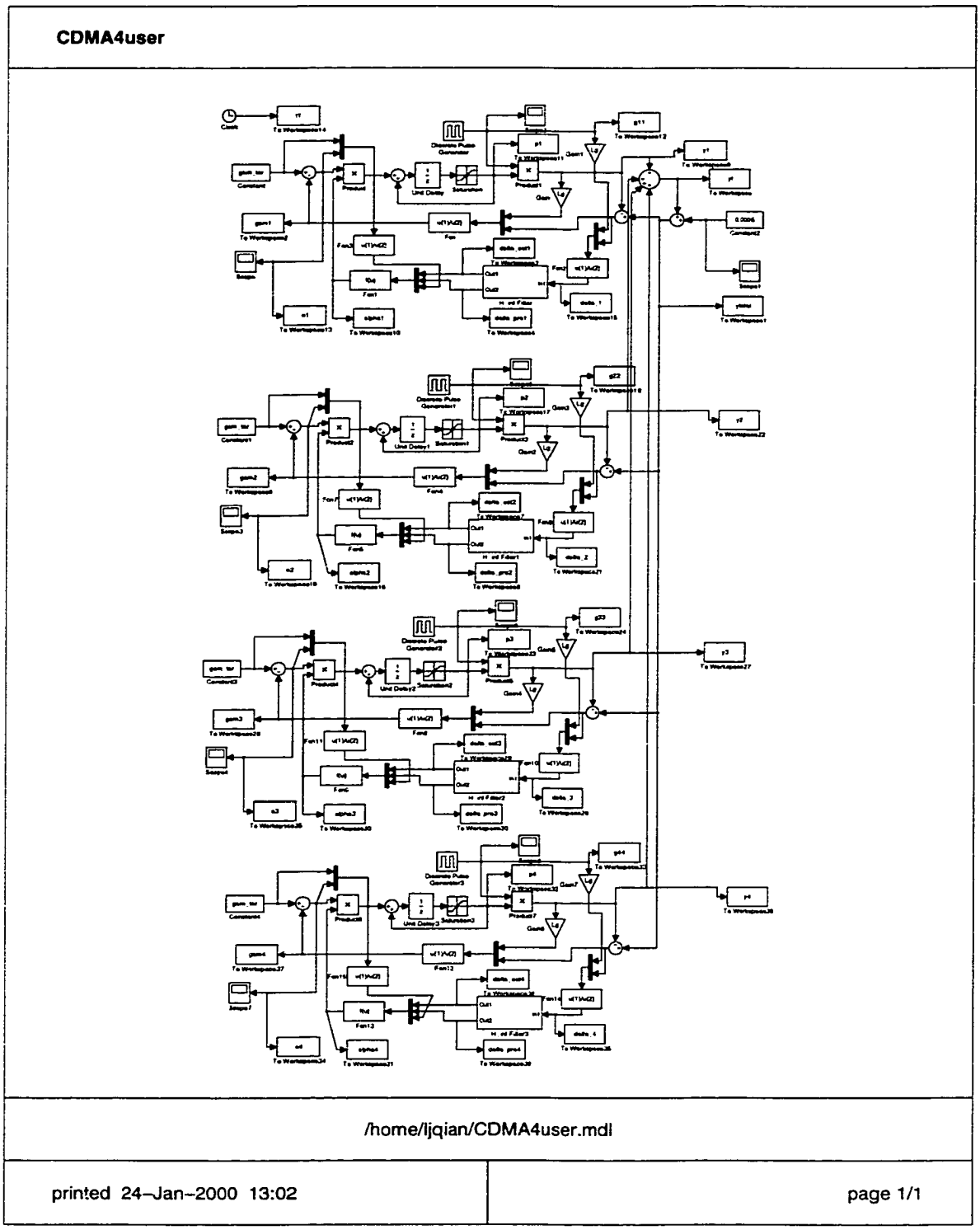

Figure A.2: SIMULINK Model: The optimal distributed fast closed-loop SIR-based power control scheme (4-user case)

Reproduced with permission of the copyright owner. Further reproduction prohibited without permission.

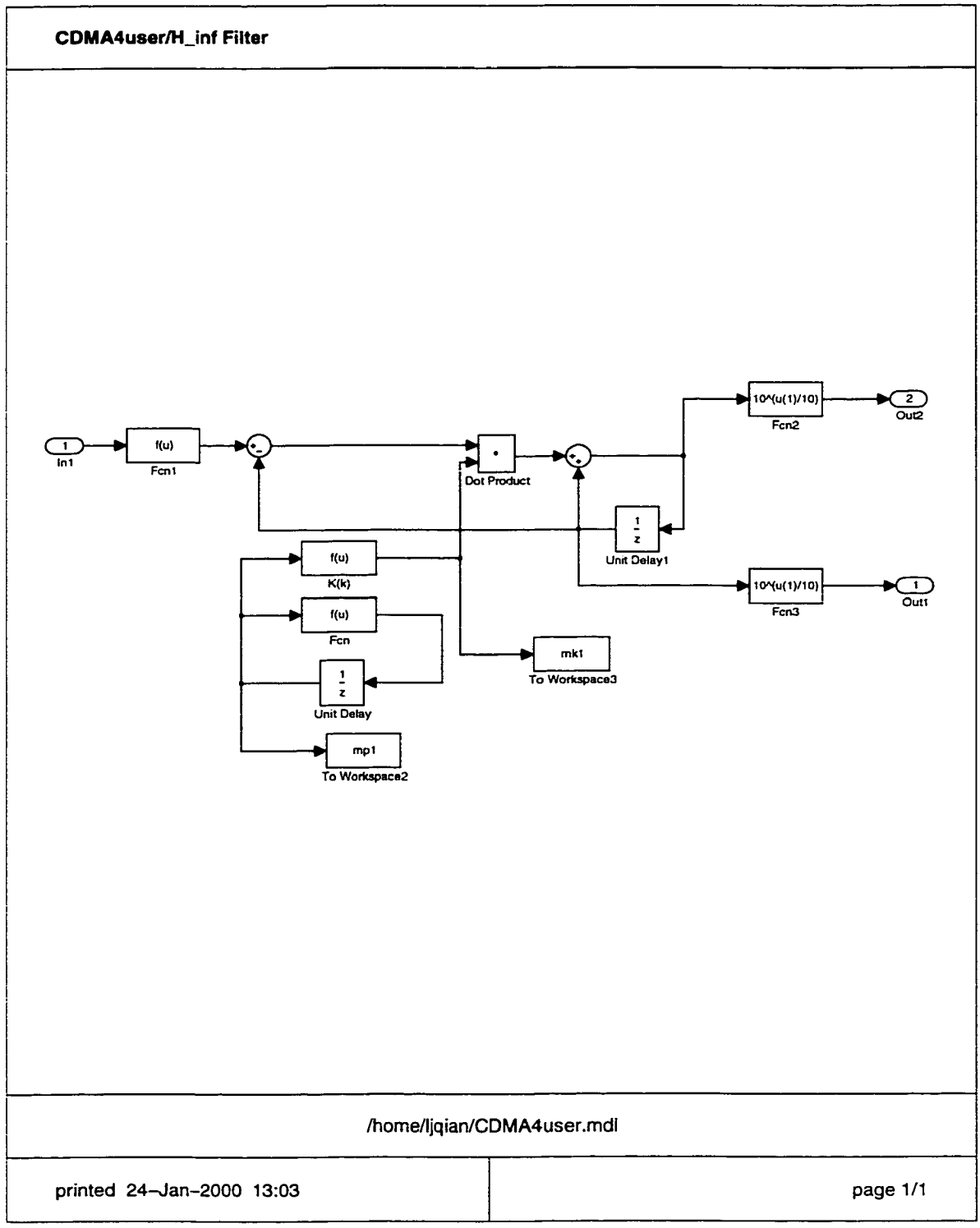

Figure A.3: SIMULINK Model: H_∞ filter for the first user

Reproduced with permission of the copyright owner. Further reproduction prohibited without permission.

Vita

LIJUN QIAN

Education and Employment

1988-93 B.Eng. from Tsinghua University, Beijing, P.R.China.

1993-96 M.S.E.E. from Technion-Israel Institute of Technology, Haifa 32000, ISRAEL.

1997-2000 Graduate student at Rutgers-The State University of New Jersey, New Brunswick, New Jersey.

1998 MTS(intern) at Corning Inc, Corning OCA East, Marlborough, MA.

1999 MTS(intern) at Bell-Labs, Lucent Technologies Inc, Murray Hill, New Jersey.

2000 Consultant at Bell-Labs, Lucent Technologies Inc, Murray Hill, New Jersey.

2001- MTS at Bell Laboratories, Lucent Technologies Inc, Murray Hill, New Jersey.

Publications

1 R. Shi, L. Qian and B. Xu, "Dynamic Mathematical Model and Optimal Control for Propylene Polymerization in CSTR," *Proc. Conf. on Process Control*, Beijing, P.R.China, October, 1993.

2 L. Qian, B. Gal-Or and E. Kreindler, "Can thrust vectoring save a doomed transport jet?" *Int. Journal of Turbo & Jet-Engines*, Vol.15, No.2, 1998.

3 L. Qian and C. Mavroidis, "Identification of the End-Effector Positioning Errors of a High Accuracy Large Medical Robot using Neural Networks," *Innovations in Theory, Practice and Applications: IEEE/RSJ Int. Conf. on Intelligent Robots and Systems*, pp.951-958, 1998.

4 L. Qian, B. Gal-Or and E. Kreindler, "Thrust Vectoring Applied to Catastrophic Failure Prevention in Jet Transports," *Proc. of World Congress of IFAC*, Q-8d-01-3, pp.43-48, 1999.

5 L. Qian and Z. Gajic, "Feasibility Conditions of SIR-based Power Control in TDMA Wireless Systems," *CISS 2000*, WA2, pp.19-24, Princeton, NJ, Mar. 2000.

Reproduced with permission of the copyright owner. Further reproduction prohibited without permission.

6 L. Qian and Z. Gajic, "Optimal Distributed Power Control in Cellular Wireless Systems," *Proc. Allerton conference*, Vol.1, pp.393-402, UIUC, IL, Oct. 2000.

7 L. Qian and Z. Gajic, "Joint Optimization of Mobile's Transmission Power and SIR Error in CDMA Systems," *ACC 2001*, to appear.

8 L. Qian and Z. Gajic, "Optimal Distributed Power Control in Cellular Wireless Systems," submitted to *Dynamic Systems in Communications Networks*, special issue of *Int. J. on Dynamics of Continuous, Discrete and Impulsive Systems.*

Reproduced with permission of the copyright owner. Further reproduction prohibited without permission.