TECHNICAL PAPER

ISSN 1047-3289 *J. Air & Waste Manage. Assoc.* **55**:210–218
Copyright 2005 Air & Waste Management Association

Effects of Ceiling-Mounted HEPA-UV Air Filters on Airborne Bacteria Concentrations in an Indoor Therapy Pool Building

Elmira Kujundzic, David A. Zander, and Mark Hernandez
Department of Civil, Environmental, and Architectural Engineering, University of Colorado at Boulder, Boulder, CO

Largus T. Angenent
Environmental Engineering Science Program, Washington University, St. Louis, MO

David E. Henderson and Shelly L. Miller
Department of Mechanical Engineering, University of Colorado at Boulder, Boulder, CO

ABSTRACT

The purpose of this study was to assess the effectiveness of a new generation of high-volume, ceiling-mounted high-efficiency particulate air (HEPA)-ultraviolet (UV) air filters (HUVAFs) for their ability to remove or inactivate bacterial aerosol. In an environmentally controlled full-scale laboratory chamber (87 m^3), and an indoor therapy pool building, the mitigation ability of air filters was assessed by comparing concentrations of total bacteria, culturable bacteria, and airborne endotoxin with and without the air filters operating under otherwise similar conditions. Controlled chamber tests with pure cultures of aerosolized *Mycobacterium parafortuitum* cells showed that the HUVAF unit tested provided an equivalent air-exchange rate of 11 hr^{-1}. Using this equivalent air-exchange rate as a design basis, three HUVAFs were installed in an indoor therapy pool building for bioaerosol mitigation, and their effectiveness was studied over a 2-year period. The HUVAFs reduced concentrations of culturable bacteria by 69 and 80% during monitoring periods executed in respective years. The HUVAFs reduced concentrations of total bacteria by 12 and 76% during the same monitoring period, respectively. Airborne endotoxin concentrations were not affected by the HUVAF operation.

IMPLICATIONS

Transmission of infectious diseases through inhalation of airborne bacteria, viruses, or fungi is a public health problem that may pose substantial risks to the general public. Ceiling-mounted HEPA filters, modified with internal UV lamps, are a potential engineering control method that can prevent the spread of bioaerosol through indoor environments. The data from this study show that these types of hybrid HEPA-UV air filters can reduce bioaerosol contamination in a relatively high-exposure setting of an indoor therapy pool building.

INTRODUCTION

Bioaerosols can pose a threat to public health through infectious and toxigenic diseases. Indoor environments contain airborne biological particulate matter (PM) (i.e., bioaerosols) that can include viable pathogenic bacteria, fungi, and viruses, or fragments thereof. Modern living standards and building systems have increased the numbers of settings that have relatively high concentrations of bioaerosols (high-exposure environments), which have been implicated to increase cases of respiratory and pulmonary diseases.[1–3] These high-exposure environments include correctional facilities,[4] healthcare facilities,[5,6] shelters for the homeless, wastewater treatment plants,[7] and public transit systems.[8] More recently, buildings housing hospital therapy pools, "hot tubs," and other warm-water leisure and therapy pools have been implicated to support and aerosolize microorganisms that include opportunistic pathogens from the genera *Legionella* and *Mycobacterium*,[9–11] causing diseases such as "lifeguard lung."[12]

The possibility for disease transfer associated with infectious bioaerosols has prompted efforts to engineer economical systems to remove, disinfect, or otherwise inactivate bioaerosols in indoor environments. Ultraviolet (UV) radiation and high-efficiency particulate air (HEPA) filtration of indoor air have received heightened attention in recent years as effective and affordable engineering controls.[13–16] Above certain dose levels, UV radiation at the 254-nm wavelength has been shown to inactivate airborne bacteria. Experimental and anecdotal evidence suggest that UV irradiation may be an effective

Ex. 2017
IPR2023-00695

and economical tool against the spread of some infectious airborne diseases, when strategically placed in high-risk indoor environments.[4,17–20] The effectiveness of in-room air filtration has been reported as an economically attractive alternative to increasing ventilation rates for the removal of suspended PM, including airborne bacteria from indoor air.[13] The production and use of portable and ceiling-mounted air filters is growing in the United States,[20] and recent prototypes and commercial models have combined HEPA filters with in-line UV lamps. There are many configurations of HEPA-UV air filters (HUVAFs), and their designed flow rates vary widely. The HEPA filter within a HUVAF physically removes particles through well-known filtration mechanisms. In addition to the influences of environmental factors, UV lamps within a HUVAF may result in the inactivation of airborne bacteria through either or both of the following scenarios: (1) by sufficiently exposing airborne bacteria not retained on HEPA surfaces (i.e., during "blow-by") to UV light, or (2) by sufficiently exposing airborne bacteria immobilized on filter surfaces to UV light.

Little is known regarding the bacterial inactivation efficiency of HUVAFs or whether modern UV irradiation systems provide a significant degree of improved protection compared with HEPA filtration by itself—particularly at high flow rates. Controlled chamber testing of a HUVAF, followed by a full-scale assessment of three of these units in an indoor therapy pool building that has had a history of bioaerosol-related infections, is reported. Performance was judged by the conventional culturing and direct microscopy of impinger-collected room air samples. This investigation was intended as a demonstration study in which controlled chamber observations were extended to estimate full-scale performance.

MATERIALS AND METHODS

Air Filter

An air filter, representative of a new generation of high-volume ceiling-mounted HUVAFs, was tested in this study (F111U modified with UV100E 1035 Coil Irradiation Unit, UV Air Treatment System, Honeywell, Inc.). This air filter was chosen because it has a relatively large airflow rate for its size and emits low sound pressures during normal operations. The manufacturer's specifications of the air filter are as follows: weight = 67 kg (installed); dimensions = 1.22 m (L) × 0.61 m (W) × 0.58 m (H); sound pressure generation = 59 dB at 3 m; nominal airflow rate = 1700 m^3/hr; particle removal efficiency = 99.97% at 0.3 μm (HEPA filter); HEPA media life = 12–24 months; and total UV irradiance = 36 W from low-pressure mercury (Hg) lamps (2 each) with an estimated life time of 8000 hr. Figure 1 shows the air filter as installed for this study. Air is drawn into the filter from below (while mounted on the ceiling) and is exhausted at the sides. UV lamps are located on both sides of the HEPA filtrate stream. The fan is on the backside of the unit and first draws air through the HEPA filter media and then past the UV lamps.

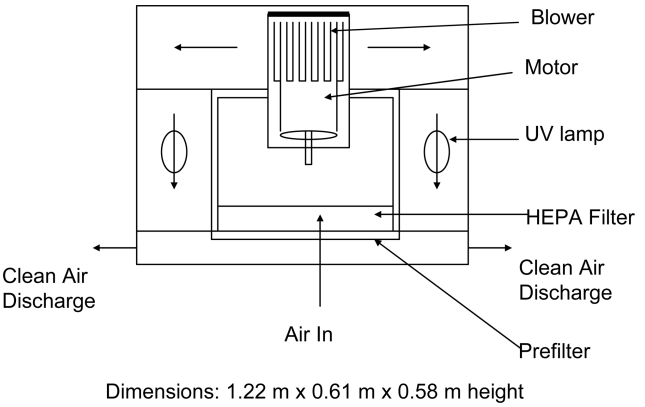

Figure 1. The ceiling-mounted HEPA filter with internal UV lamps tested in this study.

Controlled Chamber Studies

Test Facility. Experiments took place in an 87-m^3 chamber at the Joint Center for Energy Management at the University of Colorado at Boulder.[21] This chamber is capable of maintaining a wide range of temperatures (15–35 °C) and relative humidity (RH) levels (<30–90%), and it is equipped with a computer-controlled ventilation system that can deliver up to 8 air changes per hour and maintain negative pressure relative to the surrounding building. Two box fans (48-cm diameter, Model 3723, Lasko, Inc.) ensured that the chamber was well mixed. The chamber has a space height of 2.5 m, is completely insulated, and has one door and no windows. The door was closed and sealed at the bottom and edges to minimize infiltration. The test chamber was operated at temperatures between 21 and 25 °C, and humidity was left at ambient conditions. Supply and exhaust airflow rates through the ventilation systems were monitored continuously with micromanometers. In separate tracer gas studies, it was determined that aerosol mixing in the chamber approximated completely mixed conditions and that the infiltration rate was 0.1–0.3 air changes per hour.[22]

Bacterial Cultures and Growth Conditions. Mycobacterium parafortuitum (American Type Culture Collection #19689) was aerosolized during the controlled chamber studies. *M. parafortuitum* is a rod-shaped cell, 2–3 μm in length; yields pale yellow colonies on agar medium; has DNA guanine and cytosine (G+C) content of 62–70 mole%; and is acid-fast. *M. parafortuitum* was grown at 37 °C on Soybean-Casein Digest Agar (SCDA; Difco Laboratories).

Ex. 2017
IPR2023-00695

Just before aerosolization, *M. parafortuitum* cells were removed from agar plate surfaces by aseptic scraping with a sterile glass rod and were suspended in 15 mM phosphate buffer solution (PBS; 10 mM sodium phosphate buffer; 5 mM NaCl; pH 7.2). Immediately before aerosolization, cell solutions were diluted to a concentration of $\sim 1 \times 10^9$ cells/mL as determined by direct microscopy.

Bioaerosol Generation. Bacteria were aerosolized using a six-jet Collision nebulizer (CN 25, BGI, Inc.) with a 250-mL reservoir. The nebulizer was located outside of the test chamber, in an adjacent room. The aerosol was delivered from the atomizer discharge port into the test chamber at 12.5 L/min through 2.5 m of flexible tubing with a 1.6-cm inner diameter. The nebulizer was operated at 138 kPa, generated by a compressed air cylinder with an air supply system that included a dehumidifier, a HEPA filter, and a regulator (Model 3074, TSI, Inc.). Bioaerosol was generated from liquid suspensions achieving chamber air concentrations of 10^9 cells/m^3; direct microscopic examination of this suspension confirmed a dispersed state of these cells before and following their aerosolization. The volumetric flow rate of the suspension leaving the nebulizer ranged between 0.12 and 0.33 mL/min, and this bioaerosol was released ~1.5 m above the chamber floor.

Air Filter Removal/Inactivation Rate. A completely mixed room model was used to estimate the removal/inactivation rate of the air filter expressed as an equivalent air-exchange rate (eAER), as previously described.[13,16] The eAER is defined as the volumetric rate of air (m^3/hr) processed by the air filter divided by the volume of the room (m^3) where the control has been applied. The eAER has units of air changes per hour or hr^{-1}.

Experimental Protocol. The removal/inactivation rate of the HUVAF was evaluated based on measuring the airborne bacteria concentration as it decayed over time. The HUVAF was tested while it was placed on the floor of the test chamber, not on the ceiling as recommended by manufacturer. Before each experiment, the test chamber was purged with five equivalent room volumes of fresh air. Bioaerosol was generated for ~30 min to raise the concentration in the chamber to a level suitable for detection. Once the bioaerosol concentration reached the desired level, generation was ceased and the HUVAF was turned on (or kept off as a control) for a time series of sampling using liquid impingers. No mechanical ventilation was provided during this period. This experimental protocol was repeated at least 3 times.

Indoor Therapy Pool Building Studies

Indoor Therapy Pool Building. The volume of the air enclosed in the building containing the pool is ~1100 m^3. This site has an independent heat, ventilation and air conditioning (HVAC) system. Supply air is 100% outdoor air and the system provides an air-exchange rate of ~2 hr^{-1}.

The nominal surface area of the pool is 100 m^2, the nominal volume of the pool water is 208 m^3, and the pool is kept at 33 °C and a pH of 7.3. The mean cell residence time of the pool water is ~6 hr, before it is recycled through six parallel, pressurized sand filters (BakerHydro Filtrations, Inc.) in line with 12 parallel UV units. The UV units deliver a design dose of 40 μW/sec/cm^2 at the 254-nm wavelength (Advanced UV Systems). Hydrogen peroxide is added to maintain a target residual dose of 100 mg/L. Neither an evaporation rate nor a particle-partitioning rate from the pool surface has been previously measured, and data for reliable estimation of either of these parameters are not available.

Ventilation Rate and Air Change Effectiveness. Tracer gas tests were used to estimate the ventilation rate and air change effectiveness (ACE) inside the therapy pool building, with and without the HUVAFs operating. Air change effectiveness is an indicator of the indoor airflow patterns and characterizes mixing conditions within a room.[23] Carbon dioxide (CO_2) was used as the tracer gas, because it is an easily monitored, non-reactive gas that does not pose a health threat at the monitoring levels used. Tracer gas was injected at a constant pressure of 690 kPa into the pool area building from two 18-kg CO_2 cylinders. The duration of CO_2 release was regulated using an electric solenoid valve that was powered by an interval timer (GraLab 451, Dimco-Gray Co.). Once CO_2 had accumulated to between 2000 and 4000 ppm, the cylinder discharge was ceased and CO_2 levels were recorded every 1 min by CO_2 monitors (L76, Langan Products, Inc.), until concentrations had reached background levels (~45 min). This protocol was repeated 5 times to estimate the variability in the ventilation rate and ACE. CO_2 concentrations were measured at two different locations: in the ventilation exhaust duct and at the breathing zone (at a height of 1.3 m) near the lifeguard station adjacent to the pool, to one side of the building.

Experimental Protocol. The efficacy of the HUVAFs was tested during two sampling campaigns. The first campaign was conducted during April 2002, 3 months after their installation (Y1), and the second was conducted during June 2003, following a year and a half of nearly continuous operation (Y2). Air samples for microbiological analyses were collected simultaneously outside and

inside the therapy pool building during the monitoring periods. The outside air samples were collected close to the air intake for the HVAC system of the pool building. Water samples from the pool also were collected daily and analyzed for total bacteria concentrations during both years.

During the first-year sampling campaign, baseline air samples were collected on three consecutive days (April 10–12, 2002); during this time, the HUVAFs were disengaged (denoted as B-Y1). Over the following 2 weeks, air samples were again taken in identical locations with the HUVAFs fully operational (April 17–18, 24–25, 2002; denoted as H-Y1).

During the second-year sampling campaign, air samples were collected on 3 consecutive days (June 18–20, 2003); during this time, the HUVAFs were fully operational (H-Y2). During 3 days of the following week, air samples were taken again in identical locations with the HUVAFs disengaged (June 25–27, 2002: B-Y2).

Effectiveness (E), defined as the fractional reduction in airborne bacteria resulting from HUVAF operation, was estimated by comparing data collected when the air filters were operating to the data collected when disengaged (eq 1):

$$E = \frac{C_{\text{off}} - C_{\text{on}}}{C_{\text{off}}} \tag{1}$$

where C_{off} and C_{on} represent the concentrations of total or culturable bacterial aerosol without air filters and with the air filters engaged, respectively. For example, if E = 80%, this is interpreted as the air filter operation reducing airborne bacteria concentrations within the room by 80% compared with when the air filter was not operating.

Bioaerosol Sampling

For the chamber studies, airborne bacteria were collected by AGI-30 liquid impingers (Ace Glass, Inc.) at a flow rate of 12.5 L/min. These samplers were positioned in the breathing zone, 1.6 m above floor level at one location in the chamber. Samples were collected for 1 min sequentially at equally spaced time intervals during the concentration decay period. Two samplers were operated simultaneously.

For the pool building study, the indoor and outdoor air was sampled with three swirling aerosol collectors (SACs; BioSampler, SKC, Inc.) and a sterile 37-mm closed-face filter cassette (Pall Corp.) that contained a 0.8-μm pore size Isopore membrane filter (Millipore). The air above the pool was sampled by mounting the inlets of the samplers ~1.3 m above the ground surface (0.3 m above the lifeguard's desk). The flow rate of all samplers was maintained at a constant level of 12.5 L/min for a sampling period of 2 hr. Calibration of the flow through all sampling equipment was performed with a bubble flow calibration system (Gilian Gilibrator, Sensidyne, Inc.).

Before each sampling event, SACs or AGI-30 liquid impingers were completely disassembled, washed with ethanol, rinsed with distilled, deionized water, and autoclaved under 2 atm, at 120 °C for 15 min in aluminum foil. Immediately before sampling, SACs and AGI-30 liquid impingers were taken out of the aluminum foil and 20 or 30 mL of sterile 10 mM PBS with 0.01% Tween 80 (Sigma) was added into the SAC or AGI-30 reservoirs, respectively.

Culturing Assay

For the pool building study, concentrations of culturable heterotrophic bacteria were determined by plating impinger-recovered air samples and were expressed as colony forming units (CFUs). A modification of the standard plate count method was used to enumerate culturable bacteria. Nondiluted SAC liquid was plated using a spiral-dispensing method (Spiral Biotech, Inc.) according to the manufacturer's recommendations. At least three replicates of each sample were plated onto nutrient-rich SCDA medium (with 0.1 g/L cycloheximide) and incubated at 37 °C for the appropriate length of time (2–3 weeks), and colonies were counted.

Direct Microscopy

Concentrations of total bacteria were determined using previously described methods.[24] Cells were incubated in 4′,6-diamidino-2-pheynylindole (DAPI; Sigma), a nonspecific, DNA-intercalating agent, for 2 min at room temperature, and then filtered through 25-mm diameter, 0.22 μm (average pore size), black polycarbonate filters (Poretics, Inc.). Filters were mounted using low-fluorescence immersion oil containing a free-radical scavenger to retard fading (CitiFluor Ltd.) and were examined under 1100× magnification using a Nikon Eclipse E400 epifluorescence microscope fitted with an Hg lamp and polarizing filters (HBO-100 W Hg lamp; D360/40 excitation filter; 420 emission filter; 400DCLP beamsplitter; ChromaTechnology Corp.). Between 5 and 10 random fields were counted per slide, and only intact, brightly stained cells, with an obvious bacterial morphology, were counted. All counts were reported as the average of all fields counted. In accordance with accepted statistical criteria previously reported, counts from aliquots having coefficients of variation greater than 30% were discarded, and new sample aliquots were stained and counted until the distribution of bacteria immobilized was judged as uniform.[24]

Endotoxin Assay

Filter cassettes were stored in a desiccator immediately after sampling to prevent endotoxin decomposition. During the first year of the study, filters were extracted with 10 mL pyrogen-free water (Cambrex) by rotation for 1 hr in a hybridization oven (Fisher Scientific) at room temperature and were subsequently centrifuged (Model GS-6, Beckman) for 10 min at 2200 rpm. The supernatant was analyzed for endotoxin content using procedures for the Limulus Amebocyte Lysate (LAL) protocol described by the manufacturer (Kinetic-QCL, Cambrex). The enzyme signal was optimized by performing the tests with different dilutions of the same sample to minimize enzyme inhibition. A continuous recording microplate reader (Elx808, Bio-Tek Instruments, Inc.) was used to measure the rates of the LAL enzymatic reaction. Results are reported in endotoxin units (EU) per m^3 of air (EU/m^3). During the second year of the study, the extraction protocol was slightly different. Filters were extracted with 10 mL pyrogen-free water (Cambrex) by sonication for 1 hr in a sonication bath (Fisher Scientific) at room temperature and were subsequently filtered through 25-mm syringe filter with 5 μm average pore diameter (Pall Corp.). Filter eluents then were analyzed for endotoxin content as described previously.

RESULTS

Controlled Chamber Study

Controlled chamber tests showed that when the air filter was operated at its maximum flow rate, airborne *M. parafortuitum* cells were removed, as judged by direct microscopy, at an averaged eAER of 10.7 (0.4) hr^{-1} at an RH of 23%. The standard error (SE) of the regression coefficient (with errors propagated) is provided in parentheses as an estimate of the uncertainty in the eAER.

Indoor Therapy Pool Building Studies

CO_2 tracer gas tests showed that the air above the therapy pool was well mixed regardless of air filter operations. Without the HUVAFs in operation, the ACE averaged 0.95. With the HUVAFs in operation, the ACE averaged 0.93. The ACEs without and with HUVAFs in operation were not statistically different (*t* test: assuming unequal variances, $\alpha = 0.05$). An ACE of 1 indicates well-mixed conditions.[23] The tracer gas tests also showed that the averaged eAER within the pool building was 2.35 (SE = 0.44) hr^{-1} and 2.49 (SE = 0.36) hr^{-1} without and with HUVAFs in operation, respectively.

The number of HUVAFs mounted on the ceiling above the therapy pool was determined using an engineering criterion to at least double the effective air-exchange rate in the pool building. Based on the performance of the HUVAF during chamber tests, it was estimated that three units operating at full capacity would increase the air-exchange rate by an additional 3 hr^{-1}.

Biological Characterization. Figure 2 summarizes selected microbiological data from indoor air in the therapy pool building during the sampling campaigns of this research study. Concentrations are presented as an average of measurements made on multiple days, and the associated standard deviations are presented as error bars in the

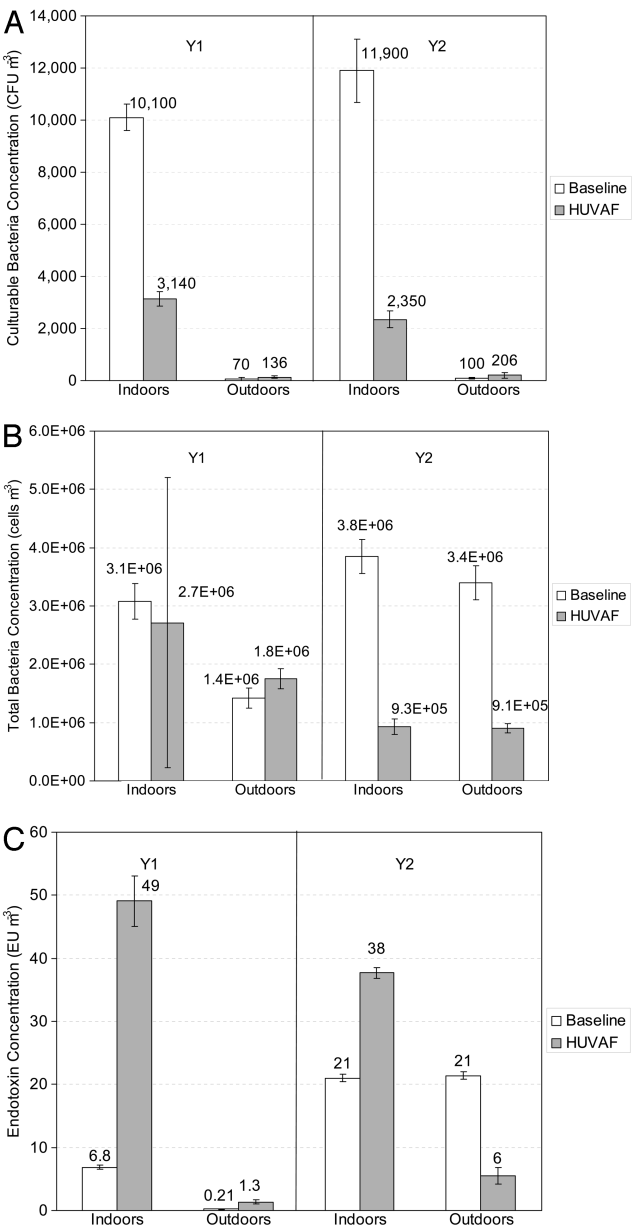

Figure 2. Averaged concentration of airborne bacteria in indoor therapy pool building air for: (a) culturable bacteria (CFU/m^3); (b) total bacteria ($\#/m^3$); and (c) endotoxin (EU/m^3). Numbers on figure indicate averaged concentration levels. Y1 and Y2 indicate results for years 1 and 2 of the study, respectively. Baseline indicates sampling campaign when the ceiling-mounted HEPA filters with internal UV lamps were not in operation, and HUVAF indicates sampling campaign when the air filters were in operation.

figure. The standard deviations reported were determined by propagation of the standard deviations of each individual measurement.

During the first monitoring period (Y1), culturable heterotrophic bacteria concentrations recovered from indoor air were between 1 and 2 orders of magnitude higher than culturable bacteria concentrations from the air immediately outdoors (Figure 2a). Total bacteria concentrations observed in indoor air were within a factor of 2 of those concurrently recovered from outdoor air. Indoor air endotoxin concentrations were greater than an order of magnitude higher than those observed in outdoor air samples. Direct microscopic analyses of the pool water showed that an average of 1×10^{11} (SD = 1.44×10^{10}) cells/m^3 and 3.57×10^{11} (SD = 5.28×10^{10}) cells/m^3 were present in the therapy pool water during the B-Y1 and H-Y1 sampling campaigns, respectively. During this period, the RH within the therapy pool building was between 25 and 40%, and the air temperature above the pool averaged 28 °C.

Observations from sampling campaigns executed during the second year of HUVAF operation (Y2) showed that culturable bacteria concentrations recovered from indoor air were between 1 and 2 orders of magnitude higher than those concurrently recovered immediately outdoors. However, during the second sampling campaign, total bacteria concentrations indoors were not substantially higher than those observed in outdoor air. Unlike the first-year sampling campaign, indoor air endotoxin concentrations were the same as those measured outdoors during the B-Y2 sampling campaign. During the H-Y2 sampling, the indoor endotoxin levels were again an order of magnitude higher. Direct microscopic analyses of pool water showed that an average of 9.13×10^{10} (SD = 1.05×10^{10}) cells/m^3 and 7.82×10^{10} (SD = 1.01×10^{10}) cells/m^3 were present in the therapy pool water for B-Y2 and H-Y2, respectively. During this period, the RH within the therapy pool building was between 60 and 67%, and the temperature of the air above the pool averaged 26 °C.

A two-factor analysis of variance (ANOVA) with replication ($\alpha = 0.05$)[25] was performed on data from each year's sampling campaign (Y1 and Y2) to test whether bioaerosol concentrations with and without HUVAF operation were significantly different. Culturable bacteria concentrations with and without the HUVAFs engaged were significantly different ($p = 0.001$), as were total bacteria concentrations ($p = 0.0001$). For the total bacteria concentration data, there was also evidence of interaction between the year of testing and air filter operation. Airborne endotoxin concentrations were not significantly different with and without HUVAFs in operation ($p = 0.15$).

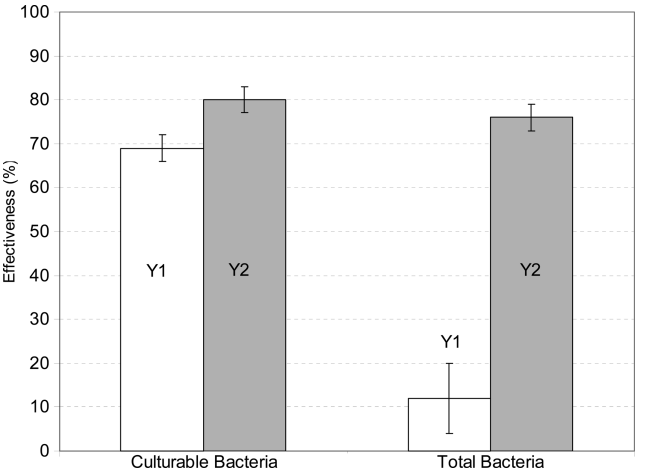

Figure 3. Effectiveness of ceiling-mounted HEPA filters with internal UV lamps for reducing/inactivating airborne bacteria in indoor therapy pool building air; Y1 and Y2 indicate results for years 1 and 2 of the study, respectively.

Effectiveness of Air Filters. Figure 3 shows the effectiveness of the HUVAFs for each sampling campaign of the study, for both culturable and total bacteria concentrations. The heights of the bars represent the effective reduction as a result of the air filters operation. Standard deviations from multiple measurements were propagated to obtain estimates of the uncertainty in effectiveness estimates.

DISCUSSION AND CONCLUSIONS

The performance of a ceiling-mounted HEPA filter with internal UV lamps was characterized in controlled chamber tests and investigated in an indoor therapy pool building. This building was considered a high-exposure environment because several employees working in the building had been diagnosed with uncommon bacterially associated pulmonary illnesses. This demonstration study showed that bacterial aerosol concentrations could be cost-effectively reduced by installation of an appropriately designed control system consisting of HUVAFs.

On the days sampled, the air in the indoor therapy pool building was enriched with bacterial aerosol when compared with that sampled immediately outdoors (Figure 2). The correlation between indoor and outdoor total bacteria concentrations as determined by direct microscopy was $R^2 = 0.31$, indicating that a possible source of indoor bioaerosol was outdoor air. Although correlation between indoor and pool water total bacteria concentrations was poor on the days sampled ($R^2 = 0.019$), genetic amplification and phylogenetic analyses of bacterial clone libraries confirmed that a source of indoor bioaerosol at this site was the water in the pool housed within the building.[26] During the winter sampling event, 82% of bacterial DNA extracted and amplified from the liquid impingers' collection reservoirs corresponded to *Mycobacterium* spp., which were also abundant

Ex. 2017
IPR2023-00695

in the pool water (35% on a DNA amplification basis). *Mycobacterium* DNA could not be detected in any outdoor air samples. While semi-quantitative, these results suggest that significant amounts of bacteria partition from the therapy pool water into an aerosol with a size distribution that can be collected by liquid impingers. This partitioning mechanism has been previously documented in wastewater, whirlpools, and laboratory reactors.[27–29] Researchers also have documented that the size of airborne droplets generated from whirlpools is less than 7 μm and in the respirable range.[28,29]

There is a paucity of survey information on total bacterial aerosol concentrations in either indoor or outdoor environments; levels from direct microscopic counts in recent reports are presented here for comparison. Total bacteria concentrations measured in the therapy pool building in this study without the HUVAFs operation ranged between 3.1×10^6 and 3.9×10^6 cells/m^3. These data are consistent with data from homes enriched with bioaerosol from flood-water damage (8.1×10^5-1.9×10^7 cells/m^3),[30] but are significantly higher than those levels reported in Scandinavian homes (1.2×10^3-9.3×10^5 cell/m^3).[31,32] Total bacteria concentrations measured outside the therapy pool building were between 9.1×10^5 and 3.4×10^6 cells/m^3, agreeing in magnitude with other summer season observations in southern Colorado[30] and Willamete Valley, OR.[33]

Recent investigations reporting the concentrations of airborne bacteria that could be recovered on broad-spectrum culture media also provide some comparative basis. Culturable bacteria levels in the indoor therapy pool building, without the HUVAFs operation, were on average 1.1×10^4 CFU/m^3. These data are within the range observed in another high-exposure environment, flood-water damaged homes (3.9×10^2-3.9×10^5 CFU/m^3).[30] Culturable bacteria concentrations in the indoor therapy pool air were higher than those reported in other indoor environments not enriched with bioaerosol. Culturable airborne bacteria levels in 20 residences in the Chicago, IL, urban area were between 100 and 1966 CFU/m^3 with some evidence of correlation to season.[34] Averaged culturable bacteria levels measured in eastern Finland homes[32] were only 17 CFU/m^3. Culturable bacterial aerosol concentrations measured inside six commercial buildings in the midwestern United States[35] were in the range between 510 and 10^4 CFU/m^3, while culturable bacteria levels reported for the indoor air of an office building in the Netherlands[36] were in the range between 115 and 159 CFU/m^3.

The relationship between total and culturable bacteria concentrations cannot be established unless direct microscopy is used. Culturing does not always estimate microorganism numbers accurately. In laboratory and field studies, microscopic analyses have consistently demonstrated that culturing introduces quantitative and ecological bias; culturability (as fraction of total) in aerosol systems usually has been reported near 0.1%.[24,33,37]

Endotoxin recovered from the therapy pool building indoor air reported here ranged between 7 and 49 EU/m^3, agreeing with levels previously reported. The levels reported here are also higher than endotoxin concentrations in the air of other indoor (cold water) swimming pools, houses, and offices, but significantly lower than those reported from surveys of other occupational and agricultural settings. Airborne endotoxin levels from a building housing an indoor swimming pool with outbreaks of granulomatous lung disease[12] were in the range between 12 and 110 EU/m^3, while airborne endotoxin levels above two pools used as control environments ranged between 0.27 and 3.7 EU/m^3. In a Boston, MA, area residential study,[38] the mean airborne endotoxin concentration observed ranged between 0.56 and 1.28 EU/m^3. Commercial office building surveys have reported between 0.5 and 3 EU/m^3 in midwestern U.S. buildings[35] and between 0.17 and 0.75 EU/m^3 in another recent survey.[39] Endotoxin surveys of agricultural and industrial settings typically have reported substantially higher concentrations. In a study comparing collection methods using liquid impingers and filter cassettes in sawmills,[40] airborne endotoxin concentrations ranged between 207 and 17,063 EU/m^3, and those from the air in cow stables[41] ranged between 36 and 761 EU/m^3. The indoor air at a machining plant[42] was found to contain endotoxin from the range between below detection (<4 EU/m^3) to 790 EU/m^3. The airborne endotoxin levels observed immediately outside the therapy pool building ranged between 0.2 and 21 EU/m^3 and were higher than some outdoor levels previously reported. Outdoor airborne endotoxin levels from an urban area of St. Louis, MO,[39] were in the range between 0.73 and 2.1 EU/m^3, and those from an urban region of Colorado[12] between 1.6 and 5.8 EU/m^3. Because endotoxin recovery can be significantly influenced by collection and is sensitive to analytical methods (yet to be standardized), care should be exercised when comparing the absolute levels reported in the literature in the context of exposure.

The effectiveness of the HUVAFs for reducing/inactivating bacteria concentrations ranged between 12 and 80% (Figure 3). During the first monitoring period, HUVAF effectiveness was 12% based on total bacteria concentrations but was 69% based on culturable bacteria concentrations. During the second monitoring period, the effectiveness was higher, 76 and 80% based on total and culturable bacteria concentrations, respectively.

The reasons underlying the differences in performance are unclear; however, building management practices and differences in bioaerosol source concentrations (possibly

outdoor air or the pool water) may have influenced the removal effectiveness of the observed HUVAFs. The first-year monitoring campaign was executed only a few months after installation of three HUVAFs, which were not continuously operated until 6 months after installation (a building managers' practice because of bather comfort). The total bacterial concentrations from the pool water were significantly lower during the first sampling campaign than during the second-year sampling campaign, which may have had a significant influence on airborne bacteria concentrations and equipment performance. Because the flux of bacterial cells from the pool water to aerosols is unknown, the potential influence of pool water concentrations on effectiveness could not be quantified. Additionally, the total bacteria concentration outdoors was higher during the second-year sampling campaign.

The air filters did not appear to have an impact on airborne endotoxin concentrations in the therapy pool building. This result is similar to findings previously reported that enhanced air filtration achieved by installing HEPA filters (estimated ≥95% efficient at 0.3 μm) in an office building did not significantly affect airborne endotoxin levels.[39]

To optimize the operation of air filters in realistic environments, the energy requirements and costs of replacing filter media and UV lamps need to be estimated. The major operating cost of the HUVAF tested in this study is related to electrical power consumption. The energy requirement for operation of one HUVAF unit is ~21 kWhr. With the current electricity cost of 5 cents per KWhr, the estimated energy cost is approximately $380/yr (assuming nonstop operation of one air filter). The estimated cost for replacing the HEPA filter media and UV lamps on one HUVAF unit (as required by the manufacturer) is $420/yr. Thus, for the indoor therapy pool building that was investigated in this study, the operation and maintenance of three air filters cost approximately $2400/yr.

The HUVAF, based on the chamber studies, had an estimated eAER of 11 hr^{-1}, which results in a clean-air delivery rate (CADR) of 11 $hr^{-1} \times 87\ m^3 = 957\ m^3$/hr. The CADR is nominally equal to the product of the air filter single-pass efficiency and the airflow rate through the device.[43] Applying this CADR to the indoor therapy pool building, and given that three HUVAFs were installed, the eAER resulting from the operation of the three air filters is estimated to be 2871 m^3/hr/1100 m^3 = 2.6 hr^{-1}. Using a completely mixed indoor environment model,[43] assuming all of the parameters remain relatively constant and that the indoor air is well-mixed (verified during tracer tests herein), the effectiveness of air filters can be related to the equivalent air-exchange rate. Given that the ventilation rate of the indoor therapy pool building was 2 hr^{-1}, and assuming a deposition rate of biological PM[44] of 0.3 hr^{-1}, the effectiveness of one air filter is estimated to be 27%. With three air filters in operation, the effectiveness is increased to 53%. This theoretical effectiveness is in agreement with that observed during this study.

The clean-air delivery rates and eAERs for many air filters available on the commercial market have been measured, although effectiveness has not been documented.[45–49] A recent study, however, reported effectiveness of a variety of air filters measured in a 36-m^3 test chamber.[13] One portable HEPA filter that provided an eAER of 4 hr^{-1} resulted in an effectiveness near 30%; and one ceiling-mounted HEPA filter that provided an eAER of 6 hr^{-1} resulted in an effectiveness of ~60%. These results are in agreement with the effectiveness that was provided by the HUVAFs tested in this study.

By installing three ceiling-mounted HEPA-UV air filters on the ceiling of an indoor therapy pool building, an additional eAER of 2.6 hr^{-1} was added to the existing 2 hr^{-1} provided by the building's ventilation. A nominal effectiveness of 60% was observed, suggesting that this air filtration equipment was capable of reducing 60% of the bacterial aerosol load under the conditions monitored. The results of this study suggest that a reasonable reduction in bioaerosol concentrations can be achieved by installing this new generation of hybrid air filters. Engineering control methods must be balanced with constraints such as occupant comfort, economic factors, and building management strategies to ensure that the health risks associated with bioaerosol exposure are as low as practical.

ACKNOWLEDGMENTS

The authors are grateful to the indoor therapy pool staff for providing access to the pool and essential help during the sampling. They also acknowledge the Joint Center for Energy Management personnel for providing essential equipment and operating the test facility. The authors thank Cody Howard, Mari Rodriguez, Prof. David Clough, and Prof. Jana Milford, University of Colorado at Boulder, for their assistance. This study was supported by funds and equipment provided by Honeywell, Inc., UltraViolet Devices, Inc., and National Science Foundation Career Award No. BES-0074653 and BES-9702165.

REFERENCES

1. Sherwood, R.L. Biological Agents. In *Pulmonary Immunotoxicology;* Cohen, M.D., Zelikoff, J.T., Schlesinger, R.B., Eds.; Kluwer Academic Publishers: Boston, MA, 2000; pp 181-197.
2. Nakagawa-Yoshida, K.; Ando, M.; Etches, R.I.; Dosman, J.A. Fatal Cases of Farmer's Lung in a Canadian Family. Probable New Antigens, *Penicillium brevicompactum* and *P. olivicolor; Chest* **1997**, *111,* 245-248.
3. Johnson, K.M. Lung Abscess Caused by *Legionella micdadei; Chest* **1997**, *111*, 242-245.
4. Nyangulu, D.S.; Harries, A.D.; Kang'Ombe, C.; Yadidi, A.E.; Chokani, K.; Cullinan, T.; Maher, D.; Nunn, P.; Salaniponi, F.M. Tuberculosis in a Prison Population in Malawi; *Lancet* **1997**, *350,* 1284-1287.
5. Macher, J.M.; Alevantis, L.E.; Chang, Y.-L.; Liu, K.-S. Effects of Ultraviolet Germicidal Lamps on Airborne Microorganisms in an Outpatient Waiting Room; *Appl. Occup. Environ. Hyg.* **1992**, *7*, 505-513.

Ex. 2017
IPR2023-00695

6. Bloch, A.B.; Orenstein, W.A.; Ewing, W.M.; Spain, W.H.; Mallison, G.F.; Herrmann, K.L.; Hinman, A.R. Measles Outbreak in a Pediatric Practice: Airborne Transmission in an Office Setting; *Pediatrics* **1985**, *75*, 676-683.
7. Crawford, G.V.; Jones, P. Sampling and Differentiation Techniques for Airborne Organisms Emitted from Wastewater; *Water Res*. **1979**, *13*, 393-399.
8. McFarland, J.W.; Hickman, C.; Osterholm, M.; MacDonald, K.L. Exposure to *Mycobacterium tuberculosis* during Air Travel; *Lancet* **1993**, *342,* 112-113.
9. Embil, J.; Warren, P.; Yakrus, M.; Stark, R.; Corne, S.; Forrest, D.; Hershfield, E. Pulmonary Illness Associated with Exposure to *Mycobacterium avium* Complex in Hot Tub Water. Hypersensitivity Pneumonitis or Infection?; *Chest* **1997**, *111*, 813-816.
10. Kahana, L.M.; Kay, J.M. Pneumonitis Due to *Mycobacterium avium* Complex in Hot Tub Water: Infection or Hypersensitivity?; *Chest* **1997**, *112*, 1713-1714.
11. Leoni, E.; Legnani, P.P.; Bucci Sabattini, M.A.; Polz, M.F. Prevalence of *Legionella* spp. in Swimming Pool Environment; *Water Res*. **2001**, *35*, 3749-3753.
12. Rose, C.S.; Martyny, J.W.; Newman, L.S.; Milton, D.K.; King, T.E., Jr., Beebe, J.L.; McCammon, J.B.; Hoffman, R.E.; Kreiss, K. Lifeguard Lung: Endemic Granulomatous Pneumonitis in an Indoor Swimming Pool; *Am. J. Public Health* **1998**, *88,* 1795-1800.
13. Miller-Leiden, S.; Lobascio, C.; Nazaroff, W.W.; Macher, J.M. Effectiveness of In-Room Air Filtration and Dilution Ventilation for Tuberculosis Infection Control; *J. Air & Waste Manage. Assoc*. **1996**, *46*, 869-882.
14. Miller, S.L.; Macher, J.M. Evaluation of a Methodology for Quantifying the Effect of Room Air Ultraviolet Germicidal Irradiation on Airborne Bacteria; *Aerosol. Sci. Technol*. **2000**, *33*, 274-295.
15. *Guidelines for Preventing and Transmission of Mycobacterium tuberculosis in Health-Care Facilities*; MMWR Oct. 28, 1994, 43 (No.RR-13); U.S. Department of Health and Human Services, Centers for Disease Control and Prevention: Atlanta, GA, 1994.
16. Xu, P.; Peccia, J.; Fabian, P.; Hernandez, M.; Miller, S.L. Efficacy of Using Ultraviolet Germicidal Irradiation of Upper-Room Air in Inactivating Airborne Bacterial Spores and Mycobacteria in Full-Scale Studies; *Atmos. Environ*. **2003**, *37*, 405-419.
17. Wells, W.F. Airborne Infection Sanitary Control; *J. Am. Med. Assoc*. **1936**, *107*, 1805-1809.
18. Riley, R.L.; Knight, M.; Middlebrook, G. Ultraviolet Susceptibility of BCG and Virulent Tubercle Bacilli; *Am. Rev. Respir. Dis*. **1976**, *113*, 413-418.
19. Stead, W.W.; Yeung, C.; Hartnett, C. Probable Role of Ultraviolet Irradiation in Preventing Transmission of Tuberculosis: A Case Study; *Infect. Control Hosp. Epidemiol*. **1996**, *17*, 11-13.
20. Kowalski, W.J.; Bahnfleth, W.P. UVGI. Design Basics for Air and Surface Disinfection; *Heat Pipe Air Cond*. **2000**, *72,* 100-110.
21. Kreider, J.F.; Brandemuehl, M.J.A. University Laboratory for Testing Commercial Building HVAC Systems; *ASHRAE J*. **1991**, *33*, 47-50.
22. Xu, P.; Miler, S.L. Factors Influencing Effectiveness of Ultraviolet Germicidal Irradiation for Inactivating Airborne Bacteria: Air Mixing and Ventilation Efficiency. In *Proceedings of the 8th International Conference on Indoor Air Quality and Climate*, Edinburgh, Scotland, August 8–13, 1999; pp 393-398.
23. Roulet, C.-A.; Vandaele, L. *Airflow Patterns within Buildings—Measurement Techniques*; AIVC Technical Note, Code TN34, Brussels, Belgium, 1991; p. 284.
24. Hernandez, M.; Miller, S.L.; Landfear, D.W.; Macher, J.M.A. Combined Fluorochrome Method for Quantification of Metabolically Active and Inactive Airborne Bacteria; *Aerosol. Sci. Technol*. **1999**, *30*, 145-160.
25. Levine, D.M.; Ramsey, P.R.; Smidt, R.K. *Applied Statistics*; Prentice-Hall: Upper Saddle River, New Jersey, 2001; p 714.
26. Angenent, L.T.; Kelley, S.T.; Pace, N.R.; Hernandez, M.T. Abundant *Mycobacteria* in Pool Water and Air of an Indoor Therapy Pool. Submitted for publication, 2004.
27. De Los Reyes, F.L.; Raskin, L. Role of Filamentous Microorganisms in Activated Sludge Foaming: Relationship of Mycolata Levels to Foaming Initiation and Stability; *Water Res*. **2002**, *36,* 445-459.
28. Baron, P.A.; Willeke, K. Respirable Droplets from Whirlpools: Measurements of Size Distribution and Estimation of Disease Potential; *Environ. Res*. **1986**, *1,* 8-18.
29. Willeke, K.; Baron, P.A. The Size Distribution of Whirlpool-Generated Droplets, Their Ability to Contain Bacteria and Their Deposition Potential in the Human Respiratory Tract. In *Advances in Aerobiology;* Birkhauser Verlag: Basel, 1987; pp 361-364.
30. Fabian, P.M.; Miller, S.L.; Reponen, T.; Hernandez, M.T. Ambient Bioaerosol Indices for Air Quality Assessments of Flood Reclamation; *J. Aerosol. Sci.,* submitted for publication, 2004.
31. Bjornsson, E.; Norback, D.; Janson, C.; Widstrom, J.; Palmgren, U.; Strom, G.; Boman, G. Asthmatic Symptoms and Indoor Levels of Microorganisms and House Dust Mites; *Clin. Exp. Allergy* **1995**, *25*, 423-431.
32. Toivola, M.; Alm, S.; Reponen, T.; Kolari, S.; Nevalainen, A.A. Personal Exposure and Microenvironmental Concentrations of Particles and Bioaerosols; *J. Environ. Monit*. **2002**, *4*, 166-174.
33. Tong, Y.; Lighthart, B. Diurnal Distribution of Total and Culturable Bacteria at a Rural Site; *Aerosol Sci. Technol*. **1999**, *30*, 246-254.
34. Moschandreas, D.J.; Pagilla, K.R.; Storino, L.V. Time and Space Uniformity of Indoor Bacteria Concentrations in Chicago Area Residences; *Aerosol Sci. Technol*. **2003**, *37*, 899-906.
35. Reynolds, S.J.; Black, D.W.; Borin, S.S.; Breuer, G.; Burmeister, L.F.; Fuortes, L.J.; Smith, T.F.; Stein, M.A.; Subramanian, P.; Thorne, P.S.; Whitten, P. Indoor Environmental Quality in Six Commercial Office Buildings in the Midwest United States; *Appl. Occup. Environ. Hyg*. **2001**, *16*, 1065-1077.
36. Teeuw, B.; Vandenbroucke-Grauls, C.; Verhoef, J. Airborne Gram-Negative Bacteria and Endotoxin in Sick Building Syndrome; *Arch. Intern. Med*. **1994**, *154*, 2339-2345.
37. Lange, J.L.; Thorne, P.S.; Lynch, N. Application of Flow Cytometry and Fluorescent In Situ Hybridization for Assessment of Exposures to Airborne Bacteria; *Appl. Environ. Microbiol*. **1997**, *63*, 1557-1563.
38. Park, J.H.; Spiegelman, D.L.; Gold, D.R.; Burge, H.A.; Milton, D.K. Predictors of Airborne Endotoxin in the Home; *Environ. Health Perspect*. **2001**, *109*, 859-864.
39. Hines, C.J.; Milton, D.K.; Larsson, L.; Petersen, M.R.; Fisk, W.J.; Mendell, M.J. Characterization and Variability of Endotoxin and 3-Hydroxy Fatty Acids in an Office Building during a Particle Intervention Study; *Indoor Air* **2000**, *10*, 2-12.
40. Duchaine, C.; Thorne, P.S.; Meriaux, A.; Grimard, Y.; Whitten, P.; Cormer, Y. Comparison of Endotoxin Exposure Assessment by Bioaerosol Impinger and Filter-Sampling Methods; *Appl. Environ. Microbiol*. **2001**, *67*, 2775-2780.
41. Zucker, B.A.; Muller, W. Concentrations of Airborne Endotoxin in Cow and Calf Stables; *J. Aerosol. Sci*. **1998**, *29*, 217-221.
42. Thorne, P.; DeKoster, J.; Subramanian, P. Environmental Assessment of Aerosols, Bioaerosols, and Airborne Endotoxins in a Machining Plant; *AIHA* **1996**, *57*, 1163-1167.
43. Nazaroff, W.W. Effectiveness of Air Cleaning Technologies. In *Proceedings of Healthy Buildings,* Espoo, Finland, August 6–10, 2000; Vol. 2, pp 49-54.
44. Thatcher, T.; Lai, C.-K.; Moreno-Jackson, R.; Sextro, R.G.; Nazaroff, W.W. Effects of Room Furnishings and Air Speed on Particle Deposition Rates Indoors; *Atmos. Environ*. **2002**, *36*, 1811-1819.
45. Offermann, F.J.; Sextro, R.G.; Fisk, W.J.; Nazaroff, W.W.; Nero, A.V.; Revzan, K.L.; Yater, J. Control of Respirable Particles in Indoor Air with Portable Air Cleaners; *Atmos. Environ*. **1985**, *19*, 1761-1771.
46. Shaughnessy, R.J.; Levetin, E.; Blocker, J.; Sublette, K.L. Effectiveness of Portable Indoor Air Cleaners—Sensory Testing Results; *Indoor Air* **1994**, *4*, 179-188.
47. Rutala, W.A.; Jones, S.M.; Worthington, J.M.; Reist, P.C.; Weber, D.J. Efficacy of Portable Filtration Units in Reducing Aerosolized Particles in the Size Range of Mycobacterium Tuberculosis; *Infect. Control Hosp. Epidemiol*. **1995**, *16*, 391-398.
48. Cheng, S.Y.; Lu, C.J.; Chen, T.R. Efficiency of a Portable Indoor Air Cleaner in Removing Pollens and Fungal Spores; *Aerosol Sci. Technol*. **1998**, *29*, 92-101.
49. Foarde, K.M.; Myers, E.A.; Hanley, J.T.; Ensor, D.S.; Roessler, P.E. Methodology to Perform Clean Air Delivery Rate Type Determinations with Microbiological Aerosols; *Aerosol Sci. Technol*. **1999**, *30*, 235-245.

About the Authors

Elmira Kujundzic is a doctoral candidate, David Zander worked on this project as an undergraduate student, and Mark Hernandez is an associate professor with the Department of Civil, Environmental, and Architectural Engineering, University of Colorado at Boulder. Largus Angenent is an assistant professor in the Environmental Engineering Science Program, Washington University in St. Louis, MO. David Henderson worked on this project as a Master's candidate and Shelly Miller is an assistant professor in the Department of Mechanical Engineering at the University of Colorado at Boulder. Address correspondence to: Mark Hernandez, 428 UCB Department of Civil, Environmental and Architectural Engineering, University of Colorado at Boulder, Boulder, CO 80309; phone: +1-303-492-5991; e-mail: mark.hernandez@colorado.edu.

View publication stats

Ex. 2017
IPR2023-00695