UNITED STATES PATENT AND TRADEMARK OFFICE

BEFORE THE PATENT TRIAL AND APPEAL BOARD

LENOVO (UNITED STATES) INC. and
MOTOROLA MOBILITY LLC,
Petitioners

v.

THETA IP, LLC
Patent Owner

IPR2023-00697 and IPR2023-00698
U.S. Patent Nos. 10,129,825 and 10,524,202

**DECLARATION OF R. JACOB BAKER, P.E., PH.D.
IN SUPPORT OF PETITIONERS' REPLIES TO
PATENT OWNER'S RESPONSES**

TABLE OF CONTENTS

I. INTRODUCTION 1

1. Materials Considered.....1

II. IMPEDANCE ('825 Patent and '202 Patent).....2

1. Patent Owner and Dr. Larson's argument that the "impedance" is an AC circuit parameter and thus can only be used when referring to an AC circuit is incorrect. 3

2. Even if Patent Owner's narrow construction of the term "impedance" is accepted, *Rauhala* still teaches varying an impedance in connection with a supply current control circuit. 7

III. SIGNAL PATH ('825 Patent and '202 Patent).....11

1. The entireties of the amplifier shown in Figure 6 and the mixer shown in Figure 7 of *Rauhala* are within the signal path.....12

2. A POSITA would have understood from the '202 patent and '825 patent that a "signal path" includes amplifiers and mixers in their entireties. 21

3. The amplifier of Figure 6 and the mixer of Figure 7 cannot be divided as Dr. Larson and Patent Owner suggest. 23

IV. DETERMINING ('825 Patent and '202 Patent) 28

V. COMPARING ('202 Patent) 33

1. The '202 patent prescribes no particular manner of "comparing" signal strengths. 33

2. *Rauhala*'s signal-to-noise ratio and/or bit error ratio satisfy the "comparing" limitations. 37

VI. DRIVE CURRENT ('825 Patent) 39

VII. AUTHENTICITY 42

VIII. CONCLUSIONS 43

I, R. Jacob Baker, declare as follows:

I. INTRODUCTION

1. My name is R. Jacob Baker Ph.D., P.E., and I am a Professor of Electrical and Computer Engineering at the University of Nevada, Las Vegas. I have prepared this declaration as an expert witness on behalf of Lenovo (United States) Inc. and Motorola Mobility LLC (collectively, "Petitioners").

2. This declaration contains my opinions in response to the Patent Owner's assertions and those of its expert, and the bases and rationale for these opinions.

3. For my efforts in connection with the preparation of this declaration, I have been compensated at my usual and customary rate for this type of consulting activity. My compensation is in no way contingent on the results of these or any other proceedings related to U.S. Patent No. 10,129,825 ("'825 patent") and U.S. Patent No. 10,524,202 ("'202 patent") (collectively, "Tsividis patents").

4. My qualifications are set forth in my previous declarations in these matters (IPR2023-00697, Ex. 1002; IPR2023-00698, Ex. 1002.)

1. Materials Considered

5. I have considered information from various sources in forming the opinions presented below. In addition to those mentioned in my previous declarations, I have reviewed the following documents:

(A) Patent Owner's Preliminary Responses and the accompanying exhibits in each of IPR2023-00697 and IPR2023-00698, including the Declaration of Lawrence E. Larson (Ex. 2005);

(B) the Institution Decisions in each of IPR2023-00697 and IPR2023-00698;

(C) Patent Owner's Responses and the accompany exhibits in each of IPR2023-00697 and IPR2023-00698, including the Declaration of Lawrence E. Larson (Ex. 2015);

(D) Transcript of Deposition of Lawrence E. Larson taken on April 18, 2024 (Ex. 1018).

II. IMPEDANCE ('825 Patent and '202 Patent)

6. As I explained in my previous Declaration (*see* IPR2023-00697, Ex. 1002 at ¶¶ 128-135; IPR2023-00698, Ex. 1002 at ¶¶ 126-136 and 145-151) and elaborated on below (*see supra* Section II.1-2), a person of ordinary skill in the art (POSITA)[1]

[1] In the Institution Decisions in both IPR proceedings, the Board adopted Petitioners' proposal for a POSITA ("bachelor's degree in electrical engineering, electronics engineering, or the equivalent, and two or more years of experience") as a better reflection of the level of skill in the prior art. IPR2023-00697, Institution Decision at 9; IPR 2023-00698, Institution Decision at 13.

would have understood *Rauhala* to teach the claimed "causing … an impedance to vary," especially in light of *Rauhala*'s disclosure of a supply current control circuit implemented in a differential amplifier and the correct construction of the term "impedance," as discussed below.

1. Patent Owner and Dr. Larson's argument that the "impedance" is an AC circuit parameter and thus can only be used when referring to an AC circuit is incorrect.

7. Patent Owner and Dr. Larson point to a limited set of definitions provided in electrical engineering dictionaries in alleging that the relevant circuit in *Rauhala* fails to disclose varying an impedance. IPR2023-00697, POR at 27; IPR2023-00698, POR at 30-31; Ex. 2015 at ¶ 55. More specifically, Patent Owner and Dr. Larson assert that the term "impedance" should be afforded a very narrow interpretation, namely the opposition of a circuit to alternating current (AC). *Id.* Based on this construction, Patent Owner and Dr. Larson argue the impedance is an AC parameter and thus a POSITA would have only used the term when referring to AC circuits. IPR2023-00697, POR at 29; IPR2023-00698, POR at 32; Ex. 2015 at ¶ 56. In my opinion, this is factually incorrect.

8. Instead, a POSITA would have understood that impedance has a broader meaning, as I explained in my previous Declarations. IPR2023-00697, Ex. 1002 at ¶ 134; IPR2023-00698, Ex. 1002 at ¶¶ 134 and 294. For example, in the same

dictionary Patent Owner cites in the POR (Graf, Modern Dictionary of Electronics, Seventh Edition), "impedance" is also defined as "[c]ombined opposition to current resulting from resistance, capacitance, and inductance," without any mention of the type of current (e.g., alternating or direct) that is opposed. IPR2023-00697, IPR2023-00698, POR at 30; POR at 27; Ex. 1006 at 9. Another definition listed among several definitions includes "[t]he combination of resistance and reactance," also without any mention of the type of current. *Id.*

impedance — 1. The total opposition (i.e., resistance and reactance) a circuit offers to the flow of alternating current at a given frequency; the ratio of the potential difference across a circuit or element of a circuit to the current through the circuit or element. It is measured in ohms, and its reciprocal is called admittance. Symbol: *Z*. 2. The combination of resistance and reactance 3. Combined opposition to current resulting from resistance, capacitance, and inductance. 4. The sinusoidal terminal voltage of a circuit divided by the current through it. 5. A speaker's resistance to an alternating current, which varies with frequency. A speaker's rated impedance is usually the value measured at 400 Hz. 6. The opposition to alternating current in a circuit, generally categorized as either high or low, and measured in ohms. 7. The total opposition that a circuit offers to the flow of alternating current or any other varying current at a particular frequency. It is a combination of resistance, *R*, and reactance, *X*, measured in ohms.

The *"Graf"* Dictionary with Annotations

9. As evidenced by the numerous definitions, in the above-mentioned dictionary, a POSITA would have been familiar with the fact that impedance is a

concept substantially broader than the overly-restrictive definition proposed by PO, but one that includes resistance.

10. Dr. Larson states "[i]mpedance is often symbolized with Z, and is given by the formula $Z = \sqrt{(R^2 + (X_L + X_C)^2)}$, where R is resistance, X_L is inductive reactance, and X_C is capacitive reactance." Ex. 2015 at 54. To be precise, the formula provided by Dr. Larson expresses the *magnitude* of an impedance. In the formula provided by Dr. Larson, the real part of impedance includes the portion related to the resistance R, and the imaginary part of impedance includes the portion related to the inductive reactance X_L and the capacitive reactance X_C. Additionally, a more universally-accepted formula for impedance in Cartesian form is $Z = R + jX$, where the real part of impedance is the resistance R and the imaginary part is the reactance X. IPR2023-00697, Ex. 1010 at 7. As clearly expressed in these equations, impedance is the sum of any real part, i.e., resistance, and any imaginary part, i.e., reactance, present in a circuit. Based on the above, a POSITA would not have concluded that a circuit does not have impedance simply because either the real part or the imaginary part does not exist within the circuit (*i.e.* has a value of zero).

11. With respect to Figure 6 in *Rauhala*, neither Patent Owner nor Dr. Larson disputes that the supply current control circuit 62 includes resistors that can be

added or removed from the circuit using the corresponding switches, and that such arrangement enables the adjustment of the bias current for the linear unit 61, i.e., a differential amplifier. IPR2023-00697, POR at 22 and 48; IPR2023-00698, POR at 24-25 and 55-56; Ex. 1004 at [0021] and Figure 6. Based on the formulas for impedance discussed above, when viewing Figure 6 of *Rauhala*, a POSITA would have concluded that the resistors in circuit 62 constitute, which is circuitry in the amplifiers A1, A2, and A3 in the signal path, the real part of the impedance.

12. In my view, it would be unreasonable for a POSITA to have concluded that circuit 62 does not have an impedance. In other words, it does not matter whether the circuit in question is purely resistive, purely reactive, or a combination of both – a POSITA would have understood that a circuit has an impedance, as long as the circuit has a resistive and/or a reactive component therein. Dr. Larson also recognizes this – that capacitance and/or inductance can be missing in a circuit (Ex. 1018 at 54:7-55:3), and that impedance Z is non-zero even when one or more of resistance, capacitive reactance, and inductive reactance are absent in the circuit. Ex. 1018 at 55:3-13 ("Q: And looking at the formula you provided for Z, you could still calculate … the value of Z if any of R, X_L or X_C are zero; correct? A: So I think you are asking if any one of R, X_L, or X_C is zero, could you still calculate Z, and the answer to that is yes. Q: Would your answer change if two of those

variables were zero? A: No. My answer would not change if two were zero.”). Based on the foregoing, and for the reasons set forth in my previous declarations (IPR2023-00697, Ex. 1002; IPR2023-00698, Ex. 1002;) it is my opinion that a POSITA would have understood that the resistors in the circuit illustrated in Figure 6 of *Rauhala* have an impedance.

2. Even if Patent Owner’s narrow construction of the term “impedance” is accepted, *Rauhala* still teaches varying an impedance in connection with a supply current control circuit.

13. As discussed above, Patent Owner and Dr. Larson advance a construction that an impedance is a total opposition to alternating current and is thus an AC parameter (*see supra* Section II.), and asserts that a POSITA would have only used the term when referring to an AC circuit. IPR2023-00697, POR at 29; IPR2023-00698, POR at 32; Ex. 2015 at ¶ 56. This is incorrect. However, even if this construction is accepted by the Board, the supply current control circuit 62 in Figure 6 of *Rauhala* teaches varying an impedance by changing the resistances.

14. As discussed in my previous Declaration, in Figure 6 of *Rauhala*, the current kI is adjusted, or varied, based on the removal or inclusion of resistors R3 and R2. IPR2023-00697, Ex. 1002 at ¶¶ 131-133. Through the use of a current mirror, the current I in the transistor Q2 is also adjusted, or varied, accordingly. IPR2023-00697, Ex. 1002 at ¶ 134. The current I sets the bias current for the linear unit 61, a

differential amplifier denoted as "diff. amp." in the figure. Ex. 1004 at [0022] and Figure 6.

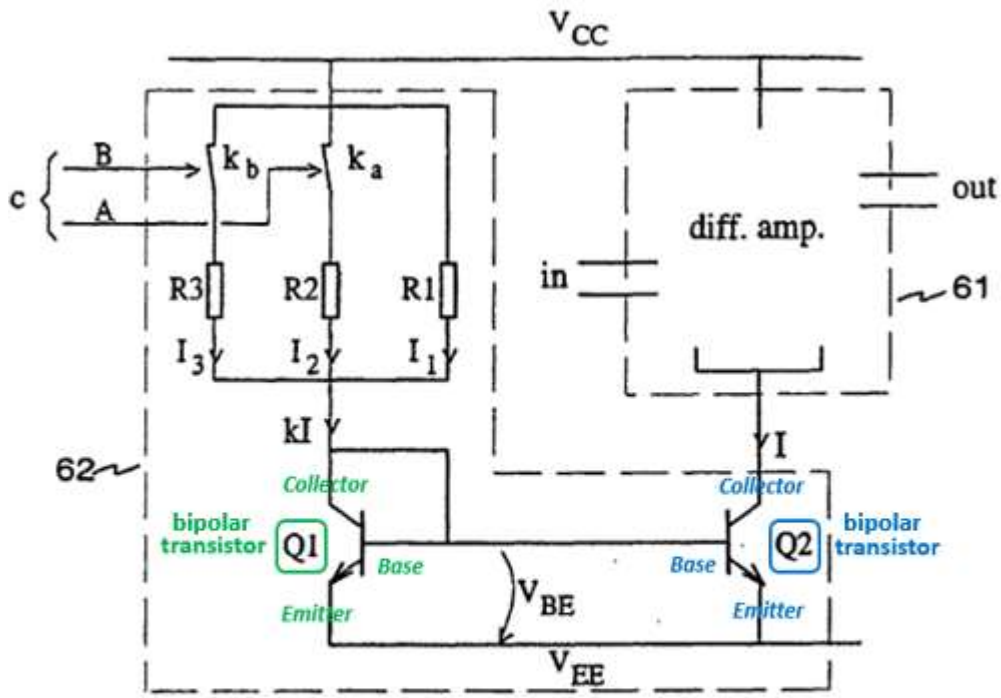

Fig. 6

Rauhala Figure 6 with Annotations

15. As shown in Figure 6 of *Rauhala*, the currents kI and I flow to the collectors of the respective bipolar transistors, Q1 and Q2. *Id.* A bipolar transistor has an impedance between its base and emitter terminals due to the diffusion capacitance resulting from the current flowing in its collector, I_C. This diffusion capacitance, C_d, is characterized by the formula $C_d = \tau_b * I_C/V_T$, where V_T is the thermal voltage and τ_b is the base-transit-time constant. Ex. 1016 at 48. Similarly, changing the

collector currents changes the output impedances of the transistors Q1, Q2 (shown above), and the transistors in the differential amplifier 61[2] (shown below in more detail).

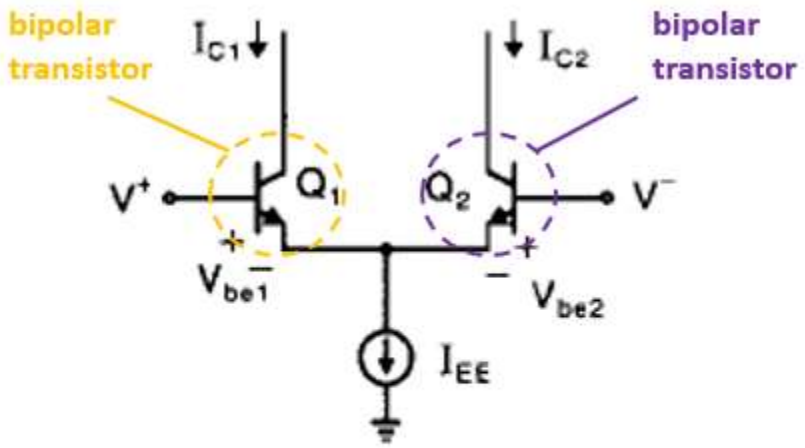

Schematic of a Differential Amplifier
(e.g., bipolar differential pair)
from Ex. 1016

16. Specifically, the output impedance, r_o, between the collector and the emitter of a bipolar transistor changes inversely with changes in the collector current as given by $r_o = V_A/I_C$ where V_A is the transistor's Early voltage. Ex. 1016 at 52. As

[2] It had been well known to a POSITA long before the effective filing date of the '825 and '202 patents that a differential amplifier includes multiple transistors. Ex. 1016 at 151. Patent Owner's expert, Dr. Larson, also agreed in cross-examination that the differential amplifier 61 in *Rauhala*'s FIG. 6 incorporates transistors. Ex. 1018 at 93:1-95:5.

kI and I, namely the collector currents of the transistors Q1 and Q2, change based on the removal or inclusion of resistors R3 and R2, the impedances, that is, the resistances[3] and capacitances, between the collector, base, and emitter terminals of the transistors Q1, Q2, and the transistors in the differential amplifier 61, also change. Dr. Larson also acknowledged this phenomenon in reference to *Rauhala*'s Figure 6 during his cross-examination. Ex. 1018 at 95:6-96:16 ("Q: And would the transistors of linear unit or differential amplifier 61 have impedances? … A: If your question is do the transistors in differential amplifier 61 include impedances? Yes, they would have, they would have impedances … Q: And as supply current I changes, would the impedances of the transistors in the differential amplifier also change? … A: Yeah. As the supply current I to the differential amplifier changes, that will change the DC bias current through the transistors and that will change their impedances.").

[3] The resistances of the transistors in the differential amplifier 61 provide an opposition to the flow of the AC current or signal received at the differential amplifier 61. Therefore, even under the construction proposed by Patent Owner and Dr. Larson, these resistances are an impedance since they provide an opposition to the flow of an AC current.

17. In light of the above, it is my opinion that a POSITA would have understood that the adjustment of kI and I through the use of resistors R3 and R2 leads to the variance of the impedance in the circuit illustrated in *Rauhala*'s Figure 6 by changing the resistances and capacitances between the terminals of the transistors Q1, Q2, and the differential amplifier 61 in Figure 6 of *Rauhala*.

III. SIGNAL PATH ('825 Patent and '202 Patent)

18. As explained in my previous declarations, a POSITA would have understood *Rauhala* to teach varying an impedance in a signal path. IPR2023-00697, Ex. 1002 at ¶¶81-82, 128-135, 139-141; IPR2023-00698, Ex. 1002 at ¶¶ 86-87, 126-136.

19. I understand that Patent Owner and Dr. Larson consider indispensable portions of amplifiers and mixers, such as 62 in Figure 6, to be excluded from the "signal path." I disagree with Patent Owner's and Dr. Larson's conclusions regarding the "signal path" for the reasons set forth below. However, even if these indispensable portions were to be excluded, so that the only portion of the amplifier or mixer that was left was, for example, circuit 61 or circuit 71, the resistances and capacitances between the terminals of the transistors used in circuit 61 and circuit 71 change with I (and kI), as discussed in detail in the previous section.

1. The entireties of the amplifier shown in Figure 6 and the mixer shown in Figure 7 of *Rauhala* are within the signal path.

20. *Rauhala* shows and describes various configurations of a radio receiver. Ex. 1004 at [0011]-[0012]. *Rauhala* plainly states that a "***signal path*** structure" of such a radio receiver is shown in Figure 2. *Id.* at [0012] (emphasis added). The signal path shown in Figure 2 includes an antenna ANT, detector DET, and "linear units" between the antenna and the detector. *Id.* at [0013]. During operation of the radio receiver, radio signals are received by the antenna ANT and are input to filter F1. The output of filter F1 is then input to amplifier A1. The output of amplifier A1 is then input to filter F2. The output of filter F2 is then input to amplifier A2. The output of amplifier A2 is then input to mixer M1. The output of mixer M1 is then input to amplifier A3. The output of amplifier A3 is then input to filter F3. The output of filter F3 is then input to mixer M2. The output of mixer M2 is then input to filter F4. The output of filter F4 is then input to amplifier detector DET. From detector DET, a baseband signal s_b is output. *Id.* at [0012]-[0013]. As another example, Figure 4 of *Rauhala* shows an identical signal path. *Id.* at [0017]-[0018] and Figure 4.

21. Based on the descriptions of the connections between antenna ANT, the filters, the mixers, the amplifiers, and detector DET in *Rauhala*, and based on the depiction of these components in Figure 2 and Figure 4, a POSITA would have

understood that the signal path extends from antenna ANT through detector DET to the receiver's output s_b. This signal path is highlighted in annotated Figure 2 and Figure 4 below:

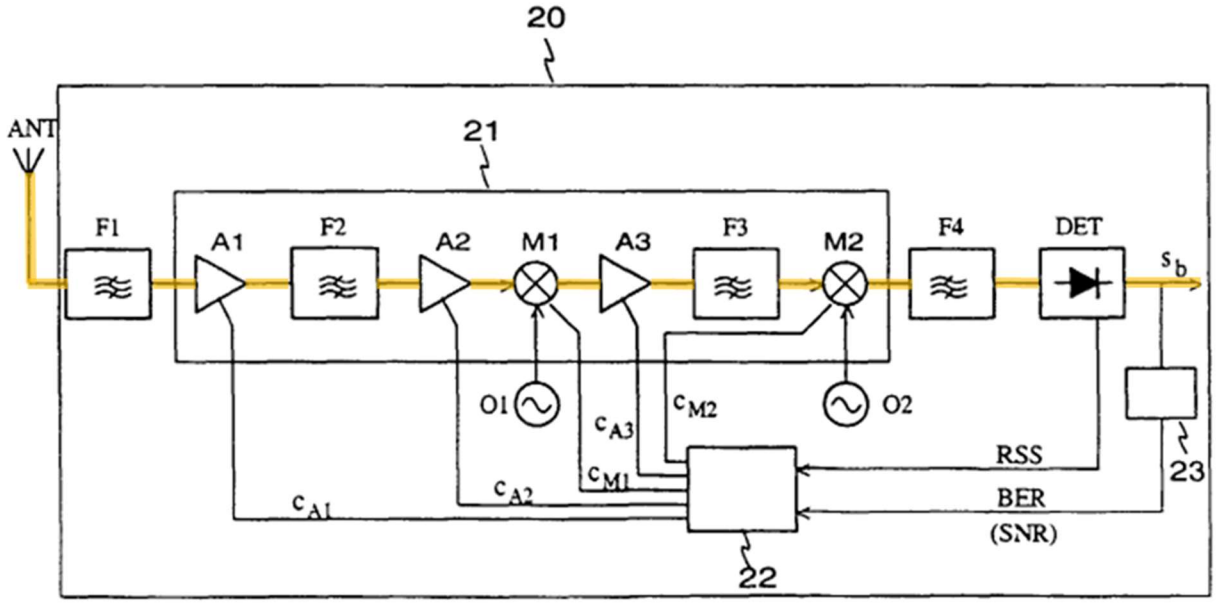

Fig. 2

Rauhala Figure 2 with Annotations

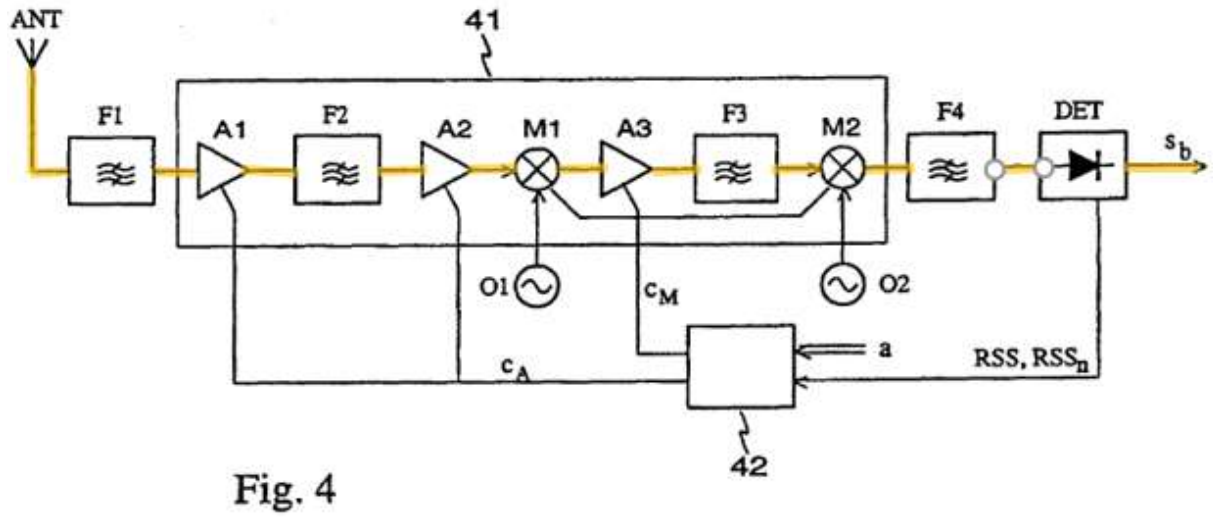

Rauhala Figure 4 with Annotations

22. The signal path shown in each of Figure 2 and Figure 4 of *Rauhala* passes through and therefore includes all of antenna ANT, filter F1, amplifier A1, filter F2, amplifier A2, mixer M1, amplifier A3, filter F3, mixer M2, filter F4, and detector DET. A POSITA would have understood that these components are all in the signal path at least by virtue of the lines connecting each respective functional block in Figures 2 and 4, and by *Rauhala*'s explicit description of how the components are coupled to each other. Ex. 1004 at [0012]. Dr. Larson agreed during his cross-examination. Ex. 1018 at 23:8-26:5.

23. With reference to Figure 2, *Rauhala* explains that control signals C_{A1}, C_{A2}, and C_{A3} are output from control unit 22 to amplifiers A1, A2, and A3, respectively. The control signals "set[] the supply current" for amplifiers A1, A2, and A3. *Id.* at

[0013]. Similar control signals C_{M1} and C_{M2} are output from control unit 22 to mixers M1 and M2, respectively, to set the supply currents for the mixers M1 and M2. *Id.* at [0013]. With reference to Figure 4, *Rauhala* explains that control signal C_A is output from control unit 42 to amplifiers A1 and A2, and control signal C_M is output from control unit 42 to mixers M1 and M2 and amplifier A3. *Id.* at [0017]. Similar to the control signals of control circuit 22, the control signals of control circuit 42 also set the supply current for the corresponding components in the signal path. *Id.* at [0017]. Control signals C_{A1}, C_{A2}, C_{A3}, C_{M1}, and C_{M2} of control circuit 22 are shown highlighted green in annotated Figure 2 below, and control signals C_A and C_M of control circuit 42 are also shown highlighted green in annotated Figure 4 below.

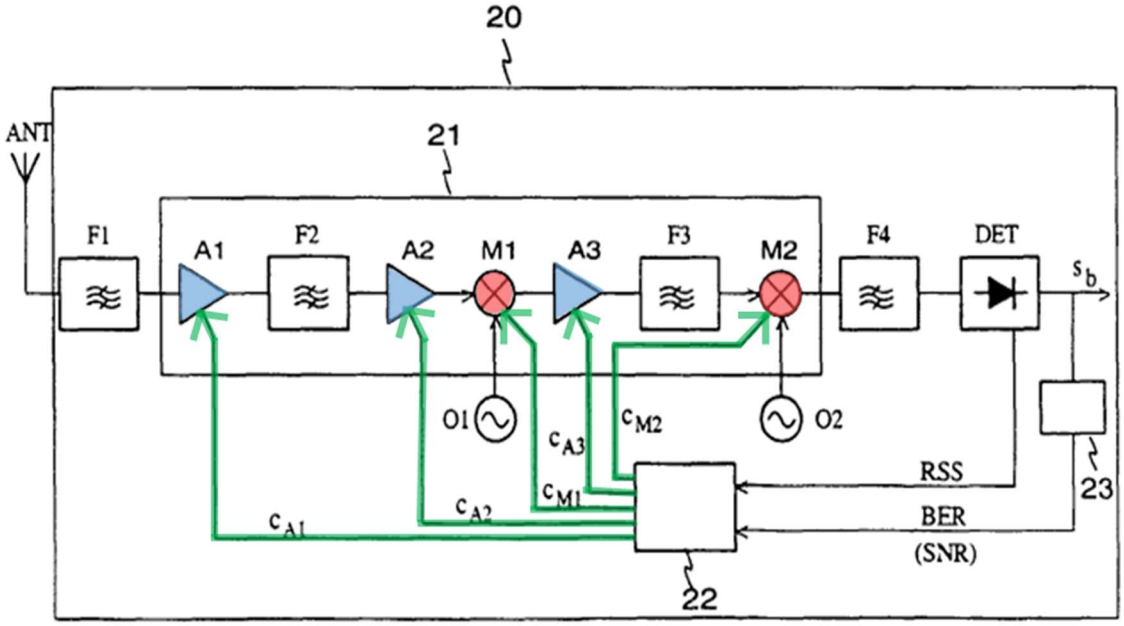

Fig. 2 *Rauhala* Figure 2 with Annotations

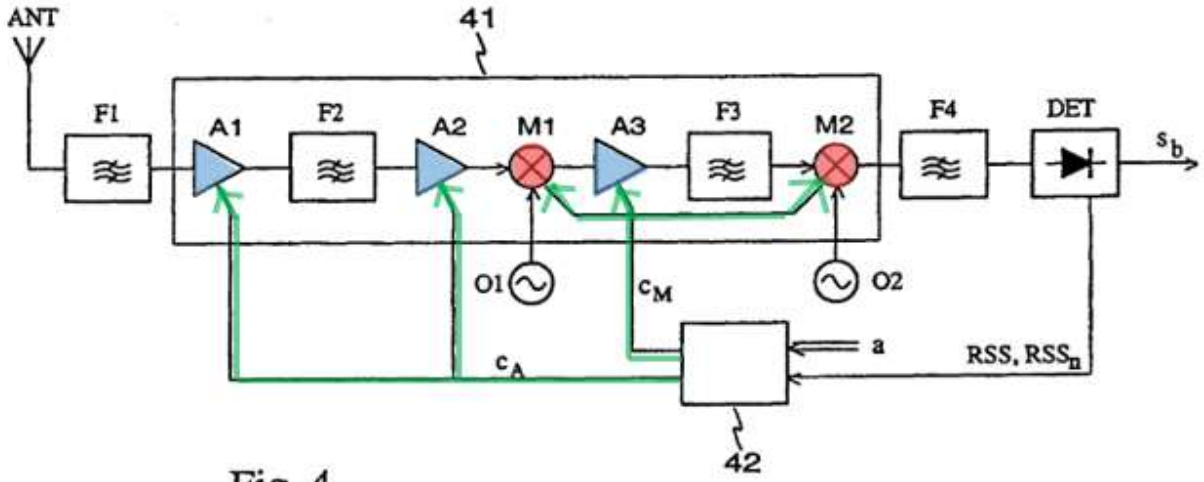

Fig. 4 *Rauhala* Figure 4 with Annotations

24. As shown in annotated Figure 2, control signals C_{A1}, C_{A2}, C_{A3}, C_{M1}, and C_{M2} are transmitted from control unit 22 to the signal path. In particular, control signals C_{A1}, C_{A2}, C_{A3}, C_{M1}, and C_{M2} are transmitted from control unit 22 to respective

amplifiers (blue) and mixers (red) in the signal path. Similarly, as shown in annotated Figure 4, control signals C_A and C_M are transmitted from control unit 42 to respective amplifiers (blue) and mixers (red) in the signal path. *Rauhala* states that Figure 6 shows "an example of a linear unit's supply current control" in which the linear unit is "an amplifier realized by a differential pair." Ex. 1004 at [0021]. Based on *Rauhala*'s own characterization of amplifiers as "linear units," a POSITA would have readily understood that the circuitry in Figure 6 corresponds to any or all of amplifiers A1, A2, and A3 within the signal path shown in Figures 2 and 4, and is indeed intended to illustrate how any or all of amplifiers A1, A2, and A3 function within the signal path.

25. *Rauhala* further explains that "[s]witches k_a and k_b," shown in control circuit 62 of Figure 6, "are controlled with a two-bit digital signal c=AB." *Id.* at [0021]. A POSITA would have understood that any of control signals C_{A1}, C_{A2}, and C_{A3}, which is transmitted to amplifiers in the signal path of Figure 2 from control unit 22, corresponds to the two-bit digital signal c. Figure 6, reproduced below with annotations, shows that two-bit digital signal c (green) is transmitted to current control circuit 62 of the amplifier (blue):

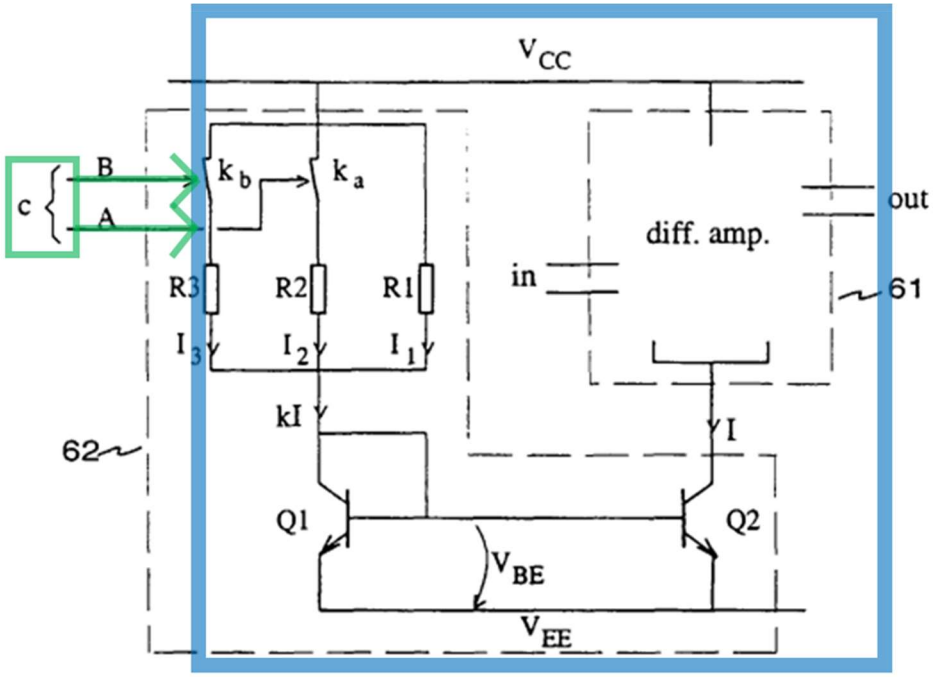

Fig. 6

Rauhala Figure 6 with Annotations

26. Just as control signals C_{A1}, C_{A2}, and C_{A3} are received by amplifiers A1, A2, and A3 in the signal path shown in Figure 2, a POSITA would have understood that two-bit digital signal c is likewise received by an amplifier in the signal path. A POSITA would therefore have understood that circuit 61 and current control circuit 62 are collectively an amplifier in a signal path. Contrary to Dr. Larson's conclusion, both circuit 61 and current control circuit 62 are therefore within the signal path. But even if one were to exclude current control circuit 62 and focus only on circuit 61 of the amplifiers A1, A2, and A3 of the signal path, the impedances (capacitances and resistances) between the terminals of the transistors

used in circuit 61 change with control signals C_{A1}, C_{A2}, and C_{A3} as discussed in detail in the previous section. *See supra* Section II.2.

27. In a similar manner, *Rauhala* refers to Figure 7 and states that "another example of controlling a linear unit's supply current" is shown, where the linear unit "is an analog multiplier used as a mixer." *Id.* at [0023]. Based on *Rauhala*'s own characterization of mixers as "linear units," a POSITA would have readily understood that the circuitry in Figure 7 corresponds to either or both of mixers M1 and M2 within the signal path shown in Figures 2 and 4, and is indeed intended to demonstrate how either or both of mixers M1 and M2 function within the signal path.

28. *Rauhala* further explains that "[s]witch k," shown in control circuit 72 of Figure 7, "is controlled with a one-bit digital signal c." *Id.* at [0023]. A POSITA would have understood that the one-bit digital signal c corresponds to one of control signals C_{M1} and C_{M2}, which are transmitted to mixers in the signal path of Figure 2 from control unit 22, or control signal C_M, which is transmitted to mixers in the signal path of Figure 4 from control unit 42. Figure 7, reproduced below with annotations, shows that one-bit digital signal c (green) is transmitted to control circuit 72 of the mixer (red):

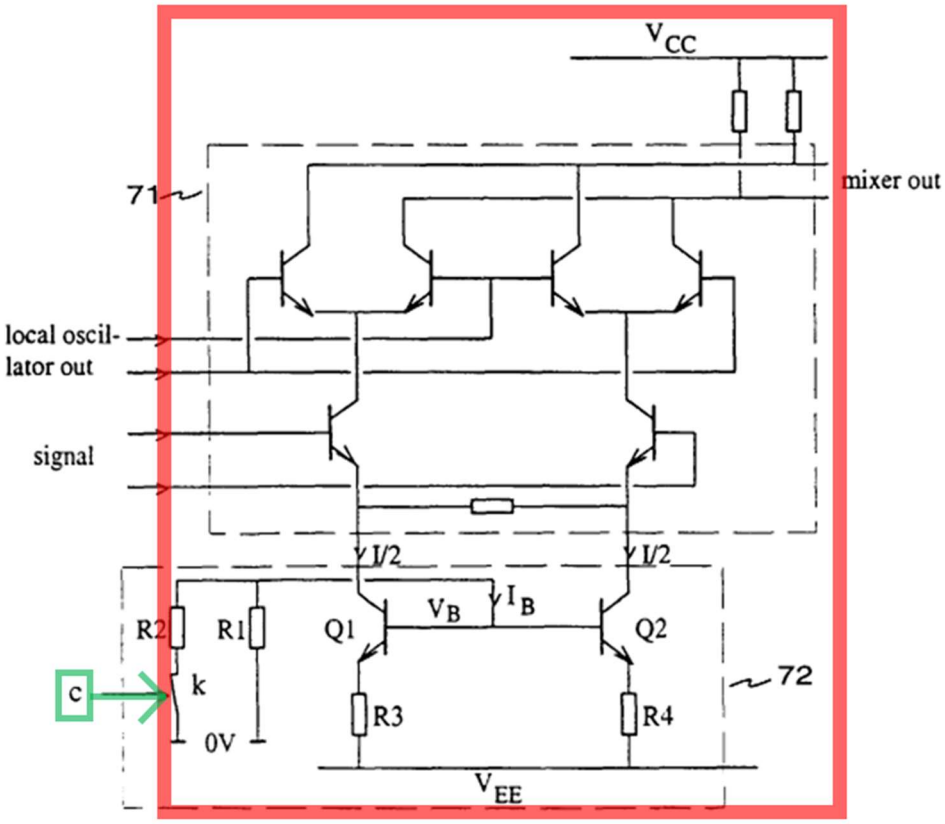

Fig. 7

Rauhala Figure 7 with Annotations

29. Just as control signals C_{M1} and C_{M2} are received by mixers M1 and M2 in the signal path shown in Figure 2 (and just as control signal C_M is received by mixers M1 and M2 in the signal path shown in Figure 4), a POSITA would have understood that one-bit digital signal c is likewise received by a mixer in the signal path. A POSITA would have therefore understood that circuit 71 and control circuit 72 are collectively a mixer in a signal path, and would receive one-bit digital signal c from another component like control unit 22 or 42. Contrary to Dr.

Larson's conclusion, both circuit 71 and control circuit 72 are therefore within the signal path. Even if one were to exclude indispensable control circuit 72 from the mixer in the signal path, the impedances of the transistors in circuit 71, a circuit Dr. Larson concedes is in the signal path, would still be adjusted, as explained in the previous section discussing how the capacitance and resistance between the terminals of a transistor change with changes in the bias current resulting from changing digital signal c. *See supra* Section II.2.

2. A POSITA would have understood from the '202 patent and '825 patent that a "signal path" includes amplifiers and mixers in their entireties.

30. Dr. Larson's conclusions that *Rauhala*'s Figure 6 amplifier and Figure 7 mixer are each only partially within the signal path are contradicted by the Tsividis patents. Based on the Tsividis patents, a POSITA would have understood a "signal path" to include amplifiers and mixers in their entirety.

31. The claims of the Tsividis patents define each instance of "signal path" only by the functional components it includes. Claim 1 of the '825 patent, for example, recites "a receiver signal path comprising a plurality of circuits, wherein the plurality of circuits includes an amplifier, a filter, and a mixer." IPR2023-00697, Ex. 1001 at 13:1-3; *see also id.* at 13:45-48 (claim 3); *id.* at 16:18-21 (claim 8). Claim 7 of the '202 patent similarly recites a "receiver having a signal path

comprising a plurality of circuits including at least an amplifier, a filter, and a mixer." IPR2023-00698, Ex. 1001 at 13:60-62; *see also id.* at 14:33-35 (claim 11); *id.* at 15:13-15 (claim 13). The claims do not state that only particular portions of amplifiers or only particular portions of mixers are within the "signal path."

32. The specifications of the Tsividis patents are consistent with the claims. In particular, the Tsividis patents repeatedly describe signal paths in terms of the functional components they include. The Tsividis patents state, for example, that an "integrated circuit includes a signal path having a low-noise amplifier configured to receive the signal, a mixer having an input coupled to an output of the low-noise amplifier, and a low-pass filter having an input coupled to an output of the mixer." IPR2023-00697, Ex. 1001 at 2:10-14; IPR2023-00698, Ex. 1001 at 2:12-16. With reference to a receiver shown in Figure 1, the Tsividis patents state that the "receiver includes a signal path formed by low-noise amplifier 102, I and Q mixers 104 and 106, low pass filters 108 and 110, and baseband amplifiers 114 and 116." IPR2023-00697, Ex. 1001 at 4:18-20; IPR2023-00698, Ex. 1001 at 4:19-21. With reference to Figure 15, the Tsividis patents state that "a transmitter portion consistent with an embodiment of the present invention [includes] a signal path formed by gain stage 1510 and power amplifier 1520." IPR2023-00697, Ex. 1001 at 12:24-27; IPR2023-00698, Ex. 1001 at 12:26-29.

33. The claims and specification of the Tsividis patents both describe a "signal path" only in terms of the functional components it includes, such as amplifiers, mixers, and filters. The Tsividis patents do not purport to exclude any portions of amplifiers or mixers from a signal path. Based on the claims and the written description of the Tsividis patents, a POSITA would have understood a "signal path" to include functional components, such as amplifiers and mixers, in their entireties.

3. The amplifier of Figure 6 and the mixer of Figure 7 cannot be divided as Dr. Larson and Patent Owner suggest.

34. By excluding control circuits 62 and 72 from the "signal path," Dr. Larson suggests that each of the amplifiers mixers shown in Figure 2 are divisible into separate portions. This is incorrect. Separating circuit 61 from control circuit 62 would render circuit 61 nonfunctional. Similarly, separating circuit 71 from control circuit 72 would render circuit 71 nonfunctional.

35. Circuit 61 of Figure 6 is coupled to a higher power supply voltage V_{cc} terminal and to a collector of transistor Q2 in control circuit 62. Ex. 1004 at [0021]. Control circuit 62 is coupled to the higher power supply voltage V_{cc} terminal and to lower power supply voltage V_{EE} terminal. *Id.* As a result of the configuration, a current kI flows to a collector of transistor Q1. *Id.* As a result of the current mirror formed by transistors Q1 and Q2, a proportional current I flows

from circuit 61 to the collector of transistor Q2. Currents kI (yellow) and I (purple) are shown highlighted below in annotated Figure 6:

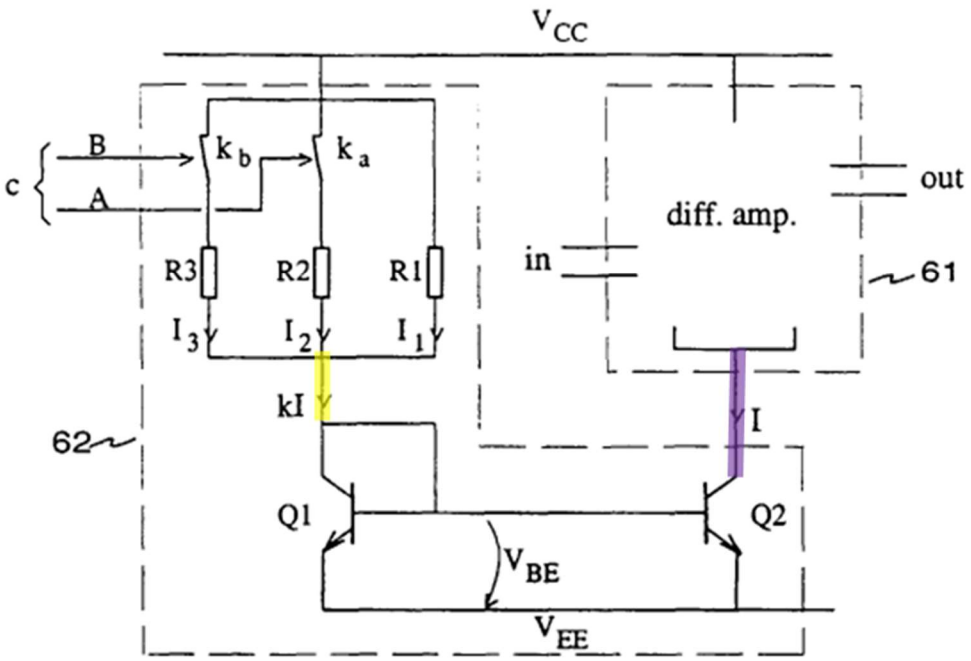

Fig. 6

Rauhala Figure 6 with Annotations

36. For circuit 61 to perform any electrical function, including amplification of a signal received at the "in" terminals, current I must be a non-zero value. When current I has a zero value, circuit 61 performs no amplification function. If current kI has a zero value, current I likewise has a zero value and circuit 61 performs no amplification function.

37. If control circuit 62 were removed from Figure 6, the entirety of which represents any of amplifiers A1, A2, and A3 of Figure 2, as Dr. Larson alleges, current kI would no longer flow at least because control circuit 62 would be disconnected from the higher power supply voltage V_{cc} terminal. Likewise, if control circuit 62 were removed from Figure 6, the electrical conduit through which current I flows would not be connected to anything. As a result, current I would necessarily have a zero value if control circuit 62 were removed from Figure 6. Circuit 61 would perform no amplification function in the absence of control circuit 62.

38. A POSITA, therefore, would have understood that circuit 61 and control circuit 62 depicted in Figure 6 of *Rauhala* collectively form a functionally indivisible amplifier. A POSITA would have further understood that as functionally indivisible portions of the amplifier, control circuit 62 cannot reasonably be excluded from a signal path in which circuit 61 is included.

39. Circuit 71 of Figure 7, the entirety of which represents either of mixer M1 or M2 of Figure 2, is similarly coupled to a higher power supply voltage V_{cc} terminal and to the collectors of transistors Q1 and Q2 in control circuit 72. *Id.* at [0023]. The emitters of the transistors Q1 and Q2 in control circuit 72 are coupled to a negative voltage V_{EE} terminal and the bases of the transistors Q1 and Q2 are

coupled to signal ground. *Id.* As a result of the configuration, a current I_B flows to the bases of transistors Q1 and Q2 and a supply current I flows from circuit 71 to the collectors of transistors Q1 and Q2. *Id*. As current I_B increases, supply current I increases. *Id.* Currents I_B (yellow) and I (purple) are shown highlighted below in annotated Figure 7:

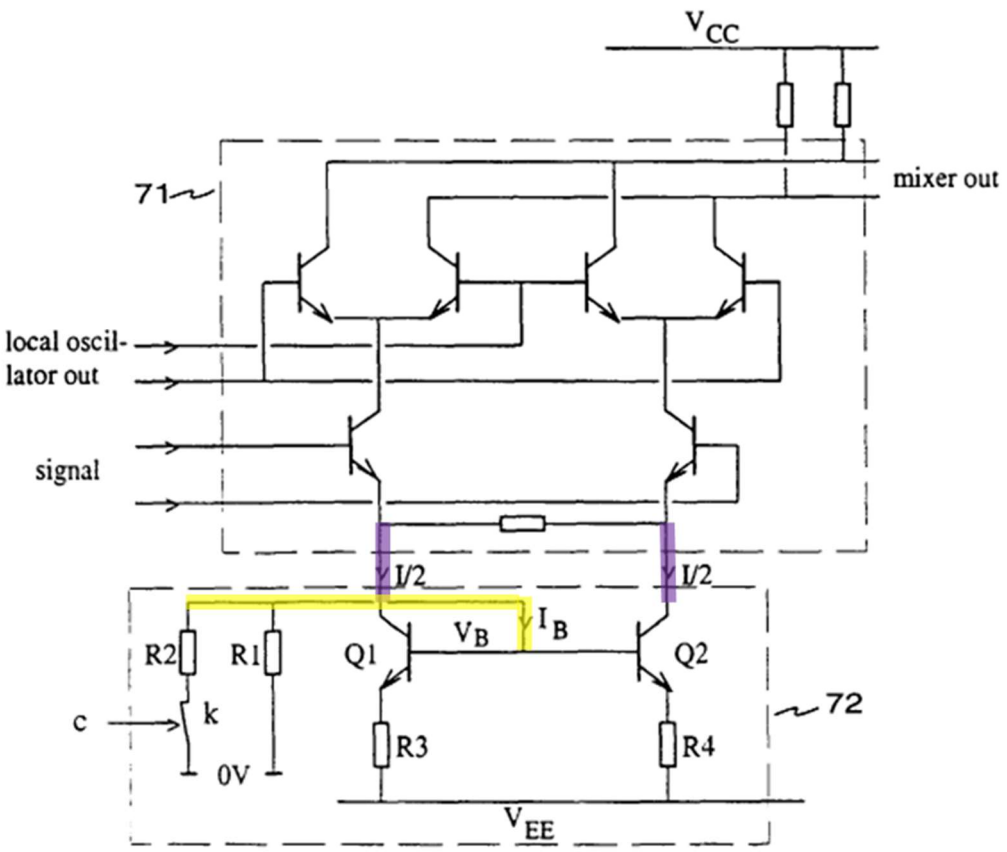

Fig. 7

Rauhala Figure 7 with Annotations

40. For circuit 71 to perform any electrical function, including mixing of a signal received at the "signal" terminals, current I must be a non-zero value. When

current I has a zero value, circuit 71 performs no mixing function. If current I_B has a zero value, current I likewise has a zero value and circuit 71 performs no mixing function.

41. If control circuit 72 were removed from Figure 7, as Dr. Larson suggests can be done while maintaining a signal path, current I_B would not exist. Likewise, if control circuit 72 were removed from Figure 7, the electrical conduits through which current I flows would not be connected to anything. As a result, a POSITA would have understood that current I would necessarily have a zero value if control circuit 72 were removed from Figure 7. Dr. Larson agreed. Ex. 1018 at 38:8-13 ("Q: If you remove the circuitry shown in 72, I would be zero; correct? A: If you remove the circuit 72 and you left the lines connecting 71 and 72 open, then the mixer would not function correctly and the DC current would be zero."). Circuit 71 would perform no mixing function in the absence of control circuit 72.

42. A POSITA, therefore, would have understood that circuit 71 and control circuit 72 depicted in Figure 6 of *Rauhala* collectively form a functionally indivisible mixer. A POSITA would have further understood that as functionally indivisible portions of the mixer, control circuit 72 cannot reasonably be excluded from a signal path in which circuit 71 is included.

IV. DETERMINING ('825 Patent and '202 Patent)

43. As I explained in my previous Declaration and elaborated on below, a POSITA would have understood *Rauhala* to teach "a circuit for determining a signal strength of the interferer signal and a circuit for determining a signal strength of the desired signal," in view of *Rauhala*'s disclosure of a detector and how the signal strengths detected by the detector are used to generate control signals to increase or decrease the currents supplied to the linear units. IPR2023-00697, Ex. 1002 at ¶¶ 61-66, 83, and 125; IPR2023-00698, Ex. 1002 at ¶¶111-120; 184-193; 223-232; 268-280.

44. Dr. Larson's assertion with respect to the above disputed limitation largely revolves around the detector described in *Rauhala*. IPR2023-00697, POR at 33-38; IPR2023-00698, POR at 37-40; Ex. 2015 at ¶¶ 60-61 and 70-72. In so doing, Dr. Larson points to a symbol, "DET," in Figure 4 of *Rauhala*, and argues that the detector identified as "DET" with a diode symbol is a "simple type of envelope detector known as a 'diode detector.'" Ex. 2015 at

¶ 60. Dr. Larson goes on to assert "[t]his kind of detector was … often used in RF receivers to measure the total received signal strength power, in a band around the frequency to which the receiver is tuned." *Id.* Based on these premises, Dr. Larson alleges that, because "[o]nly a single detector circuit is ever disclosed" and that the

detector must be re-tuned from one channel to another, in order to provide indications for both the interferer signal and the desired signal. Ex. 2015 at ¶¶ 61, 70, and 72.

45. First, I find Dr. Larson's assertion that the detector disclosed in *Rauhala* is a single diode detector to be unfounded. Although *Rauhala* discloses that the detector detects both a receive channel signal strength (RSS) and a neighboring channel signal strength (RSS_n), and how these indications are used to generate a corresponding control signal to increase or decrease currents supplied to the linear units, *Rauhala* does not specify the type of detector or the components constituting the detector. Ex. 1004 at [0012]-[0013] and [0017].

46. In fact, Dr. Larson recognizes this (e.g., "Rauhala does not give any details about the internal functioning of the detector") and even admits that he is merely "**assum[ing]**" the detector used is a diode detector, "from the common and well-known diode symbol used in the Figures, as well as the description of outputting a 'RSS' indication." Ex. 2015 at ¶ 60. Just because a symbol of a diode is used in a functional block of a diagram (e.g., Figure 4 of Rauhala), a POSITA would not have simply concluded that the functional block only included a single diode. On the contrary, a POSITA would have considered *Rauhala*'s various teachings related to the detector, and arrived at a conclusion that the detector is capable of,

and designed for, detecting the strengths of two signals concurrently to control the current supplied to the linear units of the receiver.

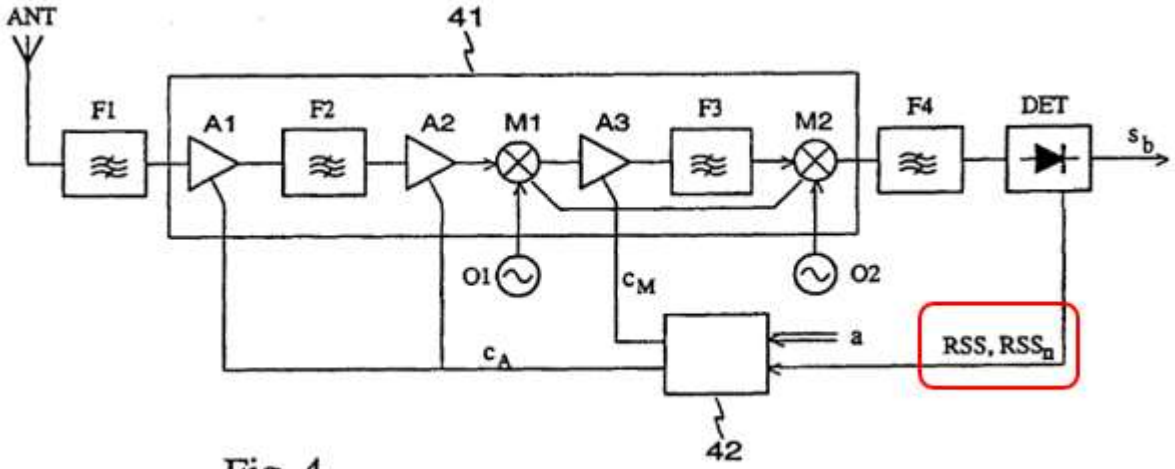

Fig. 4

47. For example, as clearly shown in Figure 4 (reproduced above), the detector DET provides RSS and RSS_n, which correspond to the receive signal strength and the neighboring signal strength respectively, to the control unit 42 to generate controls signals C_A and C_M. Ex. 1004 at Figure 4. In generating the control signals, the control unit 42 considers signal strengths of the two signals that are measured "at the same time." Ex. 1004 at [0018] ("Signal C_A is 0 when signal RSS is greater than S4 and signal RSS_n is **at the same time** smaller than S_n … Signal C_M is 1 when signal RSS is not greater than S4 and signal RSS_n is **at the same time** at least S_n.").

48. Consistent with these teachings of *Rauhala*, a POSITA would have recognized that the consideration of signal strengths detected at the same time

would be essential to the proper functioning of *Rauhala*'s receiver. For instance, if we were to measure the receive channel signal strength in one instance, and measure the neighboring channel signal strength in another instance, which Dr. Larson alleges to be the teaching of *Rauhala* (Ex. 2015 at ¶ 71), the comparison of these signal strengths to the respective threshold values would be meaningless, as the conditions under which these signals propagate can change instantly as well as constantly over time.

49. As an example, at one instance (e.g., t = 0), a receive channel signal strength could be high and a neighboring channel signal strength could be low, in which case the currents supplied to the linear units can be reduced. However, if the neighboring channel signal strength measured in a later instance (e.g., t = 1) were considered in combination with the receive channel signal strength at t=0, and the value of that neighboring channel signal strength were high, the resultant reduction or increase of the currents supplied to the linear units may be erroneous or improper due to the strengths of the two signals having been measured at different times. Simply put, if signal strengths were measured at different times in adjusting the supply currents, which would be necessary under Dr. Larson's allegation that detector re-tuning would be required during the detection of the two signal

strengths, the receiver would behave in an unpredictable, unintended manner and fail to provide the benefits contemplated by the disclosure of *Rauhala*.

50. Based on the foregoing, it is my opinion that *Rauhala* teaches "a circuit for determining a signal strength of the interfere signal and a circuit for determining a signal strength of the desired signal," at least in light of the disclosed detector and how it functions in connection with other related components within the receiver to control the supply currents for the linear units.

51. I would like to further note there appears to be no disclosure in the Tsividis Patents of two circuits that separately determine a desired signal strength and an interfering signal strength at the same time. For instance, the Tsividis Patents teach a signal strength indicator circuit 440 connected at the input side of a gain element 420, and another signal strength indicator 450 connected at the output side of a filter 430. IPR2023-00697, Ex. 1001 at 6:50-59 and Figure 4; IPR2023-00698, Ex. 1001 at 6:52-61 and Figure 4. The Tsividis Patents go on to clarify that these signal strength indicators "do not provide information as to the relative sizes of the desired and interfering signals. Rather, a **cumulative signal level** is provided at their outputs. For example, the first signal strength indicator 440 outputs a level corresponding to the sum of desired signal 412 and interfering signals 414 and 416, while the second signal strength indicator 450 provides a signal level

corresponding to the sum of desired signal 462 and interfering signals 464 and 466." IPR2023-00697, Ex. 1001 at 6:59-67 and Figure 4; IPR2023-00698, Ex. 1001 at 6:61-7:2 and Figure 4. In other words, while Tsividis Patents teach signal strength indicator circuits each configured to provide a cumulative signal level of the desired signal and the interfering signals, they do not teach two separate circuits, including a circuit configured to determine the strength of a desired signal and another circuit configured to determine the strength of an interfering signal, both determination taking place at the same time. Ex. 1018 at 122:7-13.

V. COMPARING ('202 Patent)

52. As explained in my previous declaration submitted in IPR2023-00698, a POSITA would have understood *Rauhala* to teach comparing the strength of the desired signal relative to the strength of the interferer signal. IPR2023-00698, Ex. 1002 at ¶¶ 117-120; 190-193; 229-232; and 274-280.

53. I understand that Patent Owner and Dr. Larson do not believe that *Rauhala*'s calculation of signal-to-noise ratio (SNR) or bit error rate (BER) satisfies the claimed comparing steps. I disagree with Patent Owner's and Dr. Larson's conclusions for the reasons set forth below.

1. The '202 patent prescribes no particular manner of "comparing" signal strengths.

54. The independent claims at issue recite "comparing the strength of the desired signal relative to the strength of the interferer signal." IPR2023-00698, Ex. 1001 at 14:7-8 (claim 7), 14:43-44 (claim 11), 15:20-21 (claim 13), 17:29-30 (claim 19). None of the claims specify any particular manner in which the "comparing" steps must be accomplished.

55. The specification of the '202 patent does not describe any direct comparison of a desired signal strength to an interferer signal strength. Rather, the '202 patent describes embodiments in which information about an entire signal spectrum is obtained at multiple positions within a signal path and a quality of the signal is deduced based on that information.

56. For example, the '202 patent states that "FIG. 4 illustrates a portion of a receiver" having an optional gain element 420 and a filter 430. *Id.* at 6:52-54. According to the '202 patent, signal strength indicators 440 and 450 output "a cumulative signal level" at input line 410 and output line 460, respectively. *Id.* at 6:61-64. The '202 patent specifies that "signal strength indicators 440 and 450 ***do not provide information as to the relative sizes*** of the desired and interfering signals." *Id.* at 6:61-63 (emphasis added). Figure 4 of the '202 patent is included below with annotations showing signal strength indicator 440 (blue), which outputs a cumulative signal level including desired signal 412 (green) and interferers 414

and 416 (red). Signal strength indicator 460 (blue) similarly outputs a cumulative signal level including desired signal 462 (green) and interferers 464 and 466 (red).

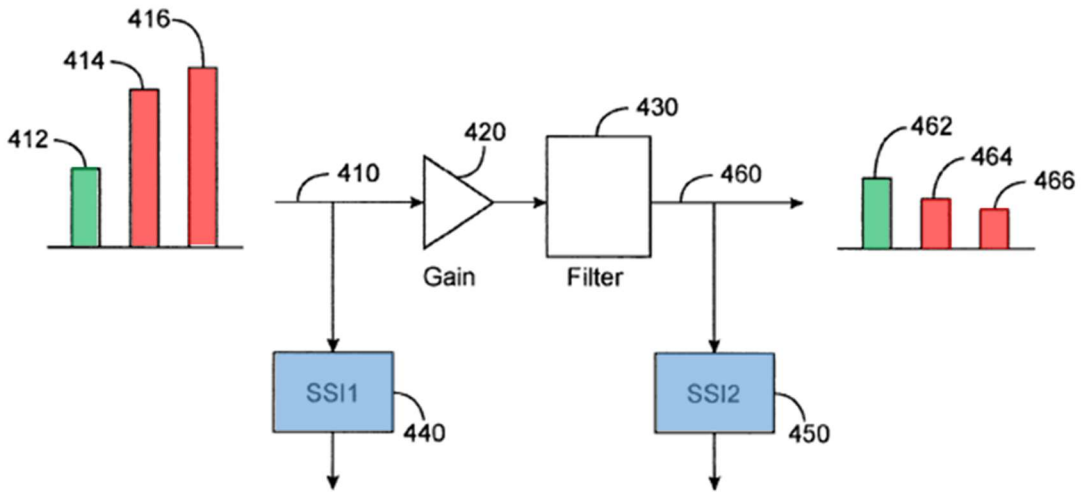

FIG. 4

'202 Patent Figure 4 with Annotations

57. The '202 patent explains that these "cumulative" signal levels output by signal strength indicators 440 and 460 are compared and that it "may be ***deduced*** that large interfering signals present at the input are being filtered by the filter 430." *Id.* at 7:6-10 (emphasis added). While signals output by signal strength indicators 440 and 460 are compared to each other, neither of these signal outputs are themselves a desired signal strength or an interferer signal strength.

58. Figure 14 of the ’202 patent shows a similar embodiment in which signal strength indicators 1470, 1472, and 1474 are positioned along a signal path. *Id.* at 12:46-53. Here, the ’202 patent does not explain what is output by the indicators, but simply states that the outputs are “received by the computational circuit 1470, which in turn controls gain and power control circuits.” *Id.* at 12:53-56.

59. Based on the lack of explanation in the ’202 patent about how “comparing the strength of the desired signal relative to the strength of the interferer signal” would or could be accomplished, and that qualities of interferer signals can be “***deduced***,” a POSITA would not have understood the ’202 patent to restrict the manner in which such “comparing” could be carried out. For example, a POSITA would not have understood the ’202 patent to require direct comparison of a desired signal strength and an interferer signal strength. A POSITA also would not have understood the ’202 patent to require any particular method of calculating when comparing. Further, a POSITA also would not have understood the ’202 patent to exclude indirect comparisons of signal strengths and comparisons that require one or more steps of deduction.

60. Counsel for Petitioners have advised me that the written description requirement under 35 U.S.C. 112(a) is not at issue in these proceedings.

According, I have formed no opinion as to whether the "comparing" limitations of the claims are adequately supported by the specification.

2. *Rauhala*'s signal-to-noise ratio and/or bit error ratio satisfy the "comparing" limitations.

61. Reading *Rauhala* in its entirety, a POSITA would have readily understood that the signal-to-noise ratio (SNR) and/or bit error ratio (BER) are comparisons of desired signal strength to interferer signal strength, consistent with the '202 patent.

62. Identifying a problem to be solved, *Rauhala* points out that the "quality of a signal in a radio receiver is degraded by noise and interference," including "noise and interference indirectly caused by other radio signals." Ex. 1004 at [0002]. *Rauhala* recognizes that such noise and interference may derive from "a signal on a neighboring channel, which momentarily is considerably stronger than the signal to be received, shifts the operating point of the high-frequency amplifier and/or mixer towards non-linearity and saturation." *Id. Rauhala* states explicitly that such a signal on a neighboring channel "degrades the signal-to-noise ratio at the amplifier output." *Id.* A POSITA would have readily understood that SNR, as used here, is intended to qualify and/or quantify the relative strengths of the desired signal and the interferer signal (signal on a neighboring channel). In other words, a POSITA would have understood, at least based on the statement of the problem

identified by *Rauhala*, that SNR is a comparison of desired signal strength to interferer signal strength.

63. *Rauhala* states that, according to the invention, a "receiver monitors the signal strength on the receive channel and neighboring channels." *Id.* at [0006]. *Rauhala* further states that "the receiver can determine the quality of the detected signal by calculating its bit error ratio or signal-to-noise ratio." *Id. Rauhala* goes on to explain that supply currents for front-end amplifiers may be controlled based on signal strengths on the receive channel and neighboring channels, *i.e.*, channels carrying interferer signals. *Id*.

64. A POSITA reading *Rauhala* would have naturally read the explanation of the identified problem and summary of the proposed solutions, both in the introduction, to understand the technical details provided in the document. From these introductory paragraphs, a POSITA would have readily understood that the solutions proposed by *Rauhala* are directed to adjusting signal parameters in response to various desired signal strengths and interferer signal strengths. A POSITA would have understood that *Rauhala* identifies both SNR and BER as useful metrics for qualifying and/or quantifying the relative strengths of the desired signal strengths and the interferer signal strengths. Whether SNR and BER can be calculated in various ways or not in other contexts would have been irrelevant to

the POSITA, having considered that *Rauhala* plainly is concerned with desired signals relative to interferer signals. That other acronyms such as SIR (signal-to-interference ratio) or SINR (signal-to-interference-plus-noise ratio) may be used in other contexts would not have impacted a POSITA's understanding of *Rauhala*'s SNR and BER. In view of the foregoing, and for the reasons set forth in my previous declaration (IPR2023-00698, Ex. 1002), a POSITA would have understood *Rauhala* to teach the "comparing" elements.

VI. DRIVE CURRENT ('825 Patent)

65. As I explained in my previous Declaration and elaborated on below, a POSITA would have understood *Rauhala* to teach the claimed "causing … an impedance … to be increased, thereby causing a drive current … to be decreased," especially in light of *Rauhala*'s disclosure of a supply current control circuit implemented in a differential amplifier and how the differential amplifier is driven by the current supplied by the circuit. IPR2023-00697, Ex. 1002 at ¶¶ 139-141.

66. Dr. Larson asserts that "[b]ias currents I_B of *Rauhala*'s Figure 7 and kI of *Rauhala*'s Figure 6 would not have been understood by a POSITA to be or relate to a 'switching current' as the applicant used that term during prosecution of the '330 Patent, or a signal 'drive' current as described in the discussion of Figure 6 of the Tsividis Patents." Ex. 2015 at ¶ 67. I find Dr. Larson's statement that the

currents shown in *Rauhala*'s figures are not, or related to, a drive current to be wrong.

67. The Tsividis Patents explicitly state that "FIG. 6 is an example of how a circuit's impedance may be scaled to reduce drive currents, and, depending on the circuit configuration used, associated bias currents as well." IPR2023-00697, Ex. 1001 at 7:47-49; IPR2023-00698, Ex. 1001 at 7:49-51. The Tsividis Patents recognize this relationship between a drive current and a bias current of a circuit at various places within the disclosure, explaining that scaling an impedance of a circuit can affect both a drive current and a bias current in the circuit. For instance, the Tsividis Patents state "the circuit's impedance may be increased, thus reducing required drive currents. Similarly, bias currents may be lowered, thus reducing the maximum signal in handling capability," "one or more impedances in the function block 920 may be increased … In this way one or more of the driving currents in the function block 920 may be reduced. Similarly, since the drive current is reduced, one or more bias current may also be reduced," and "the noise floor is increased by increasing impedances in the function block 1020. This reduces the required drive current and may also allow for a reduction in bias currents." IPR2023-00697, Ex. 1001 at 6:20-23, 9:56-62, and 10:18-21; IPR2023-00698, Ex. 1001 at 6:22-25, 9:58-63, and 10:20-23. Furthermore, claim 7 of the '825 patent

explicitly recites "wherein increasing the impedance of the circuit reduces a drive current of the circuit and reduces the associated bias current of the circuit." IPR2023-00697, Ex. 1001 at 16:7-9. Thus, the Tsividis Patents acknowledge that the drive current and the bias current are related (e.g., "associated"), and that both currents may be reduced by way of impedance scaling.

68. As the term suggests, and consistent with how the term is used in reference to Figure 6 of the Tsividis Patents, a drive current is a current that drives a component or a load in a circuit. Ex. 1018 at 145:4-6. Based on this definition, in Figure 6 of *Rauhala*, at least the currents kI and I are the "drive currents" that drive the load, namely the components of the differential amplifier 61, which I elaborate on further below.

69. In Figure 6 of *Rauhala*, as I explained in my previous Declaration, the currents kI and I at Q1 and Q2 respectively are the bias currents, and change by the addition or removal of resistors R2 and R3 (i.e., the impedances) in the circuit. IPR2023-00697, Ex. 1002 at ¶¶ 67-70. When the differential amplifier 61 switches to a state where it needs a maximum current to drive the load, the drive current will be the same as its bias current I, as the bias current is the maximum amount of current that can be supplied to the differential amplifier 61. In this context, the drive current will be equal to the bias current in Figure 6, which I correctly pointed

out in my previous Declaration. IPR2023-00697, Ex. 1002 at ¶ 140. Figure 7 of *Rauhala* follows a similar principal where the bias current I/2 becomes a drive current for the mixer 71 when the mixer needs a maximum current to drive the load. IPR2023-00697, Ex. 1002 at ¶ 141.

70. Based on the foregoing, it is my opinion that Patent Owner and Dr. Larson's contention that the bias currents described in *Rauhala*'s Figure 6 would not have been understood by a POSITA to be or relate to a drive current is incorrect, and that the current I supplied to the differential amplifier 61 of *Rauhala*'s Figure 6, or the current I/2 supplied to each side of the mixer 71 of *Rauhala*'s Figure 7, are the drive currents.

VII. AUTHENTICITY

71. Exhibit 1016 (Ex. 1016, or "Johns") is an electronic copy of a textbook authored by David A. Johns and Ken Martin, titled *Analog Integrated Circuit Design*, published by John Wiley & Sons, Inc. in 1997. I provided the electronic copy of Johns to counsel for Petitioners to be submitted as Ex. 1016. I confirm that the copy of Johns submitted as Ex. 1016 is a true and correct copy that was accessible to the relevant public before the earliest-claimed priority date of the Tsividis patents. Johns, in particular, is a well-known textbook and was widely

used in undergraduate and graduate electronics courses. Johns was widely published for such purposes.

72. Page 3 of Johns provides a copyright date of "© 1997, by John Wiley & Sons, Inc. In my experience with textbooks published by John Wiley & Sons, Inc., such copyright dates are accurate and accurately reflect the publication date of the textbooks in which they appear.

VIII. CONCLUSIONS

73. In summary, it is my opinion that the references discussed in this Declaration disclose or suggest all of the features recited in claims 1, 3, 4, and 8 of the '825 patent and claims 7-11, 13, and 19-21 of the '202 patent.

74. I declare that all statements made herein of my knowledge are true, and that all statements made on information and belief are believed to be true, and that these statements were made with the knowledge that willful false statements and the like so made are punishable by fine or imprisonment, or both, under Section 1001 of Title 18 of the United States Code.

Dated: April 30, 2024 By: R. Jacob Baker, P.E., Ph.D.