UNITED STATES PATENT AND TRADEMARK OFFICE

BEFORE THE PATENT TRIAL AND APPEAL BOARD

LENOVO (UNITED STATES) INC. and
MOTOROLA MOBILITY LLC,
Petitioners,

v.

THETA IP, LLC,
Patent Owner.

Case IPR2023-00697 & -00698
U.S. Patent Nos. 10,129,825 & 10,524,202

DECLARATION OF LAWRENCE E. LARSON IN SUPPORT OF PATENT OWNER'S RESPONSES

I, Lawrence E. Larson, declare as follows:

INTRODUCTION

1. My name is Larry Larson. I have been retained by Theta IP, LLC ("Theta") to provide information and assistance regarding U.S. Patent No. 10,129,825 ("the '825 Patent") and U.S. Patent No. 10,524,202 ("the '202 Patent") (collectively, the "Tsividis Patents"). Specifically, I have been asked to consider the Petitions for *Inter Partes* Review numbered IPR2023-00697 and IPR2023-00698 ("Petitions") regarding the Tsividis Patents, and specifically the Declarations of Professor R. Jacob Baker (EX1002) that accompany the Petitions.[1]

2. For the purposes of this declaration, I have been asked to provide information and opinions about the state of the art and knowledge of a person of ordinary skill in the art, what such a person would understand from the Tsividis Patents, what such a person would find disclosed in or obvious from the prior art references relied on in the Petitions, and related issues in response to the opinions

[1] I previously submitted a declaration in connection with Theta's Preliminary Responses in these proceedings, as well as in IPR2023-00694 concerning U.S. Patent No. 7,010,330 ("the '330 Patent"). I understand the Board did not institute any trial proceedings in IPR2023-00694.

expressed by Prof. Baker.

3. I have personal knowledge of the facts and opinions set forth in this declaration, and, if called upon to do so, I would testify competently thereto.

4. I am currently Professor of Engineering at the School of Engineering, Brown University. I have also held the positions of Interim Provost of Brown University, as well as Sorensen Family Dean and Founding Dean of the School of Engineering. I hold a Ph.D. in Electrical Engineering, as well as a M.B.A. degree, from the University of California, Los Angeles, and Master of Engineering and Bachelor of Science degrees in Electrical Engineering from Cornell University. I have over 40 years of experience in the design of high-performance circuits for RF communications and other applications, both in industry and academia. I have published hundreds of papers in refereed journals and conference proceedings, and am a named inventor on at least 43 issued patents. My experience will be described further below under Qualifications and Background, and in my CV (EX2006).

5. I am being compensated for my work in connection with this matter at my standard hourly consulting rate. My compensation for my work in this matter is not dependent in any way on my conclusions and opinions, the contents of this declaration, the substance of any further opinions or testimony that I may provide, or the outcome of this matter or any matter involving the Tsividis Patents.

6. The materials I have reviewed in forming the opinions in this

declaration include the following:

a. The ’330 Patent, ’825 patent, and ’202 Patent (EX1001 to each Petition) and their prosecution histories (EX1003 to each Petition).

b. The *Rauhala* (EX1004), *Cummins* (EX1005), *Meador* (EX1006), *Furuno* (EX1007), and *Saito* (EX1008) references cited in the Petitions.

c. The Declarations of Professor R. Jacob Baker (EX1002 to each Petition) and the materials discussed therein.

d. The Petitions and their remaining exhibits.

7. In addition, I have considered the relevant legal standards, as they have been explained to me by counsel and as I understand them. I have also considered the knowledge and understanding of a person of ordinary skill at the time of the filing of the parent ’330 Patent and as of the filing of its provisionals, of which I am familiar.

8. I have previously submitted a report concerning some of the Tsividis Patents, in the concluded litigation *Theta IP, LLC v. Samsung Electronics Co. Ltd.*, No. W-20-CV-00160-ADA (W.D. Tex.).

QUALIFICATIONS AND BACKGROUND

9. My education and professional background is in Electrical Engineering, with a particular focus on high-speed integrated circuit design. I hold a Ph.D. (1986)

in Electrical Engineering from the University of California, Los Angeles, as well as a M.B.A. degree (1996) from that university, and Master of Engineering (1980) and Bachelor of Science (1979) degrees in Electrical Engineering from Cornell University.

10. I am currently a Professor of Engineering at the School of Engineering at Brown University. I recently completed an appointment as Interim Provost for Brown University. I have also been the Sorensen Family Dean (Inaugural Chair Holder) and Founding Dean of the School of Engineering there. I held that position beginning in 2011, during which time I oversaw a large expansion in the number of tenure-track engineering faculty, substantial increases in external research funding, the creation of new graduate programs, and the construction of a state-of-the-art research and teaching facility.

11. Over the course of my career, I have held a variety of positions in academia and industry. These include but are not limited to the following:

12. From 1980 to 1988, I was a Member of Technical Staff at Hughes Aircraft and Hughes Research Laboratories, where I was responsible for the development of CMOS and III-V analog and digital integrated circuits, modeling and characterization of MESFETs and HEMTs and the development of improved III-V process techniques. During my tenure, among other things, I helped developed the first high-performance GaAs switched-capacitor circuits with clock rates in

excess of 100 MHz, demonstrated the first use of low-temperature buffer GaAs MESFET technology with digital integrated circuits, setting a record for digital divider performance (22 GHz), and developed GaAs MESFET operational amplifier with record GBW (10 GHz).

13. From 1988 to 1992, I was an Adjunct Associate Professor at UCLA, where I was responsible for senior level digital and analog integrated circuit design courses and a graduate analog MOS integrated circuit design course.

14. From 1992 to 1994, I was an Assistant Manager for the DARPA / Hughes MIMIC Program, where I was responsible for Program Management of the Advanced Technology Portion of DARPA/Hughes MIMIC Program, with a budget of approximately $8M/yr. In that capacity, I was responsible for the technical and program direction of GaAs HBT and PHEMT efforts. I also directed insertion of advanced GaAs-based technology into next generation communication and radar systems.

15. From 1988 to 1994, I was also a Manager in the HEMT Technology Department, Microwave Devices and Circuits Laboratory, at Hughes Research Laboratories, where I directed research in high-speed III-V materials, devices, and circuits, and was responsible for approximately $4M/yr. in Corporate IR&D and Government Research Contracts. In that capacity, I helped develop the first space-qualified InP low-noise millimeter wave HEMT. This effort was awarded the 1996

Lawrence Hyland Award - the highest technical achievement award at Hughes Electronics. I also helped develop the first micromachining (MEMS) switch and tuner applications for RF and microwave applications (1991). This technology has now become an extremely active area of worldwide research and development. I also helped demonstrate the first InP-based HEMT low-noise and high- power MMICs from 2 - 60 GHz, with world record noise figures and power-added efficiencies. I further helped establish a state-of-the-art InP HEMT MMIC foundry at HRL, developed the first low-power/high-speed InP HEMT digital IC technology with ring oscillator delays of 4.2 pS, and directed the research program that demonstrated HEMTs with record fT's and fMAX's above 300 GHz (1993), which produced the highest frequency room temperature integrated circuit ever reported - a 210 GHz VCO (IEDM 1994).

16. From 1994 to 1996, I was a Manager in the Telecommunications Technology Department, Microwave Devices and Circuits Laboratory, at Hughes Research Laboratories, where I directed the research and development of integrated circuits for commercial RF and microwave communications applications, including DBS, cellular telephone, VSAT, and PCS.

17. From 1996 to 2011, I held the CWC Industry Chair Professor in Wireless Communications, in the Department of Electrical and Computer Engineering at the University of California, San Diego (UCSD). Among other

things, I helped develop improved integrated circuit techniques and novel device structures for wireless communications applications. This required development of high-frequency integrated circuits, devices, and packaging techniques for ultra-wide bandwidth telecommunications applications, and development of novel data converter and analog-signal processing architectures that are matched to communications applications.

18. From 2000 to 2001, while on academic leave from UCSD, I was a Director at IBM's West Coast Design Center of Excellence in IBM Research Division, where I directed development of Radio Frequency Integrated Circuits for SiGe RFICs for 3rd Generation wireless cellular applications. I was also responsible for leading the team that developed a complete Wideband CDMA chip set for several "first tier" cellular telephone providers.

19. From 2001 to 2006, I was the Director of the UCSD Center for Wireless Communications (http://cwc.ucsd.edu), which is one of the largest industry-funded University Research Centers in the world. Involving over 20 professors, and supporting roughly 50 PhD graduate students during my tenure, with an annual budget in excess of $3M, the CWC conducted research in all areas of wireless communications, from fundamental devices and materials to software applications. I was responsible for all aspects of the Center, from new member development to financial management and establishing the research direction.

20. From 2007 to 2011, I was the Chair of the Department of Electrical and Computer Engineering at the University of California, San Diego. The ECE Department at UCSD is the largest graduate program on the UCSD campus. As Chair, I oversaw the faculty development (hiring, promotion, and tenure process), educational policy and teaching, successful accreditation review, department resource allocation, and external relations. I also led the development (with CS) of the Executive Masters of Advanced Study in Embedded Wireless Systems program.

21. I have authored more than 125 refereed journal publications and more than 250 peer reviewed conference publications. I have authored and/or edited 12 books or chapters, including:

- L. E. Larson, P. T. Greiling, and J. F. Jensen, "GaAs Device Physics and Circuit Design", in **Microprocessor Design for GaAs Technology**, V. Milutinovic, Ed., (Prentice Hall, York, 1989).
- L. E. Larson, "High-Speed Analog-to-Digital and Digital-to-Analog Conversion with GaAs Technology: Prospects, Trends, and Obstacles", in **GaAs Technology and Devices and Their Impact on Circuits and Systems**, D. Haigh, Ed., (Peter Peregrinus, Ltd, 1989).
- L. E. Larson and G. C. Temes, "Signal Conditioning and Interface Circuits", in **McGraw-Hill Handbook of Digital Signal Processing**, S. Mitra, Ed., 1993.
- L. E. Larson, "GaAs Operational Amplifier Design", in **High-Speed Analog Integrated Circuits**, R. Goyal, Ed., (Wiley Interscience, York, 1995).

- L. E. Larson, **RF and Microwave Circuit Design for Wireless Communications** (Artech House, Inc., 1996).
- M. Matloubian and L. E. Larson, "InP-Based Power HEMTs", in **Pseudomorphic HEMT Technology and Applications**, Ed. R. L. Ross et al., (Kluwer Academic Publishers, Netherlands, 1996).
- J. Groe, and L. E. Larson, **CDMA Mobile Radio Design: Systems, Algorithms, and Circuits** (Artech House, Inc., 2000).
- L. Larson and F. Chang, "Si/SiGe HBT Technology for Low-Power Mobile Communications Systems Applications," **in RF Technologies for Low-Power Wireless Communications**, Ed. T. Itoh, G. Haddad, and J. Harvey, Wiley Interscience, 2001.
- X. Zhang, L. Larson, and P. Asbeck, **Design of Linear Outphasing Power Amplifiers for Wireless Communications**, Artech House, 2002. 196 pages. BOOK
- **Digital Communications Using Chaos and Nonlinear Dynamics**, Larson, Lawrence E; Liu, Jia-Ming; Tsimring, Lev S. (Eds.) 2006, XIV, Springer.
- **Circuits and Systems for Future Generations of Wireless Communications**, A. Tasic, W. Serdijn, L. Larson, G. Setti, G. (Eds.), 2009, VIII, Springer.
- **Fast Hopping Frequency Generation in Digital CMOS**, Mohammad Farazian, Lawrence E. Larson, Prasad S. Gudem. 2012 Springer.

I am also named inventor on at least 43 US patents.

22. I have been elected a Fellow of the IEEE. The Fellow is the highest grade of membership of the IEEE, a world professional body consisting of over 300,000 electrical and electronics engineers, with only one-tenth of one percent

(0.1%) of the IEEE membership being elected to the Fellow grade each year. Election to Fellow is based upon votes cast by existing Fellows in IEEE. I have also served on a number of IEEE Committees and as a Paper Reviewer.

23. EX2006 contains a true and correct copy of my *Curriculum Vitae* further describing my background and experience.

UNDERSTANDING OF RELEVANT LEGAL STANDARDS

24. In forming my opinions here, I have applied the following understanding of certain legal concepts related to anticipation, obviousness, combinations of references, and knowledge of one of ordinary skill in the art. This understanding was supplied to me by counsel.

25. I understand that in order for a patent claim to be invalid as anticipated by a prior art reference, each and every element of that patent claim must be found disclosed in that reference, explicitly or inherently, to a person of ordinary skill in the art. Inherent disclosure requires that the claimed element be the only possible option given the other disclosures of the reference. If any single element of a claim is not disclosed in the reference, the entire claim is not anticipated.

26. I understand that a patent may be invalid if the differences between the claimed subject matter and the prior art are such that the subject matter as a whole would have been obvious at the time the invention was made to a person of ordinary

skill in the pertinent art.

27. I understand that a person of ordinary skill in the art provides a reference point from which the prior art and claimed invention should be viewed. This reference point prevents one from using his or her own insight or hindsight in deciding whether a claim is obvious.

28. I also understand that an obviousness determination includes the consideration of various factors such as (1) the scope and content of the prior art; (2) the differences between the prior art and the asserted claims; (3) the level of ordinary skill in the pertinent art; and (4) the existence of secondary considerations such as commercial success, long-felt but unresolved needs, failure of others, etc.

29. I understand that in considering the scope and content of the prior art, references must be reasonably related (i.e., analogous) to the claimed invention of that patent.

30. I understand that the test for determining whether a prior art reference constitutes analogous art to the claimed invention is (1) whether the reference is from the same field of endeavor, regardless of the problem addressed and, (2) if the reference is not within the field of the inventor's endeavor, whether the reference still is reasonably pertinent to the particular problem the inventor is trying to solve.

31. I also understand that the existence of each and every element of the claimed invention in the prior art does not necessarily prove obviousness of the

combination of those elements, and that inventions usually rely on building blocks of prior art.

32. I understand that one may consider whether a reason existed at the time of the invention that would have prompted a person of ordinary skill in the art in the relevant field to combine the known elements in the way the claimed invention does. The reason could come from the prior art, the background knowledge of one of ordinary skill in the art, the nature of the problem to be solved, market demand, or common sense. But it cannot come from hindsight.

33. I understand that in considering whether a claimed invention is obvious, one may but is not required to find obviousness if at the time of the claimed invention there was a reason that would have prompted a person having ordinary skill in the field of the invention to combine the known elements in a way the claimed invention does, taking into account such factors as: (1) whether the claimed invention was merely the predictable result of using prior art elements according to their known function(s); (2) whether the claimed invention provides an obvious solution to a known problem in the relevant field; (3) whether the prior art teaches or suggests the desirability of combining elements claimed in the invention; (4) whether the prior art teaches away from combining elements in the claimed invention; (5) whether it would have been obvious to try the combinations of elements, such as when there is a design need or market pressure to solve a problem and there are a finite number of

identified, predictable solutions; and (6) whether the change resulted more from design incentives or other market forces. To find it rendered the invention obvious, the prior art must provide a reasonable expectation of success. Obvious to try is not sufficient in unpredictable technologies.

34. I understand that each claim must be evaluated separately for obviousness, and that it is improper to use hindsight. In other words, one must consider only what was known at the time of the invention.

35. I understand that, when present, secondary indicia of non-obviousness must always be considered and can serve as an important check on hindsight bias. These factors may include (1) a long felt but unmet need in the prior art that was satisfied by the invention of the patent; (2) commercial success or lack of commercial success of processes covered by the patent; (3) unexpected results achieved by the invention; (4) recognition and praise of the invention by others skilled in the art; (5) taking of licenses under the patent by others; (6) skepticism, disbelief in or incredulity on the part of those skilled in the art that the patentee's approach worked; (7) rapid replacement of the prior art devices in the industry; (8) unsuccessful attempts by those skilled in the art to make the invention; (9) teaching away by those skilled in the art; and (10) deliberate copying of the invention. I also understand that there must be a relationship, or nexus, between any such secondary indicia and the invention.

36. I have been informed and understand that the obviousness analysis requires a comparison of the properly construed claim language to the prior art on a claim-by-claim basis.

37. I understand that questions of fact concerning obviousness, such as the knowledge of a person of skill in the art, ordinarily must be proven by clear and convincing evidence. For an obviousness combination, obviousness must be proven by clear and convincing evidence such that a person of ordinary skill in the art at the time of the alleged invention would have had a reason (or reasons) for combining the teachings of those prior art references to achieve the claimed invention, and that same person of ordinary skill in the art would have had a reasonable expectation of success from combining those teachings.

38. I understand that the disclosures in a patent or prior art reference are viewed from the perspective of a person of ordinary skill in the art at the time of the invention.

39. I understand that a person having ordinary skill in the art is a hypothetical person and the concept is used to analyze the relevant art without the benefit of hindsight. A person of ordinary skill in the art is presumed to be one who thinks along the lines of conventional wisdom in the art. I understand that the hypothetical person of ordinary skill is presumed to have knowledge of all references that are sufficiently related to one another and to the pertinent art, and to have

knowledge of all arts reasonably pertinent to the particular problem that the claimed invention addresses.

THE TSIVIDIS PATENTS

40. I have reviewed the Tsividis Patent (EX1001 to each Petition) and their file histories (EX1003 to each Petition). The parent '330 Patent issued from U.S. Patent Application No. 10/784,613, which was filed on February 23, 2004. And each of the Tsividis Patents claims priority to effective priority date of U.S. Provisional Application Nos. 60/451,229 and 60/451,230, filed March 1, 2003.

41. In the early 2000s, wireless connectivity was becoming increasingly prevalent – in cellular phones, laptops, etc. Reducing power consumption in cellular phones—in order to increase battery life and increase the length of time that the device could operate before recharging—was an ever-present concern.

42. As explained in the Tsividis Patents, electronic circuits are generally designed to function under "worst-case" operating conditions. A worst-case operating condition occurs when reception of a desired signal is low while interfering signals and spurious noise are high. These conditions are typically accompanied by a worst-case power consumption because of the need for increased amplifier gain and bias and impedance changes to achieve and maintain adequate connectivity.

43. The patents recognize that a wireless transceiver does not always

operate in these worst-case conditions—such as when the received signal is strong or interfering signals are weak or non-existent. In these improved conditions, dynamic adjustments can be made to circuits to reduce power. For example, receiver bias currents can be reduced below what is necessary for the worst-case condition. As another example, signal path impedances can be raised, introducing some additional noise but also reducing current consumption. As a third example, gain can be reduced, also reducing current consumption in amplifier circuits. The patents explain that if these adjustments are done appropriately, power dissipation is reduced while signal-to-noise ratio is appropriately managed, increasing battery life.

44. Professor Tsividis' patented inventions use bias current control, varying impedance, gain, and other dynamic changes (separately or in combination) to reduce power dissipation when conditions are better than a worst case. For example, they describe reducing bias currents in response to a need for reduced signal handling capability; or varying/controlling impedances thereby reducing required drive and other bias currents in response to a strong received signal; or varying gain and/or impedances in response to a received signal in the presence of interfering signals that are weak or non-existent.

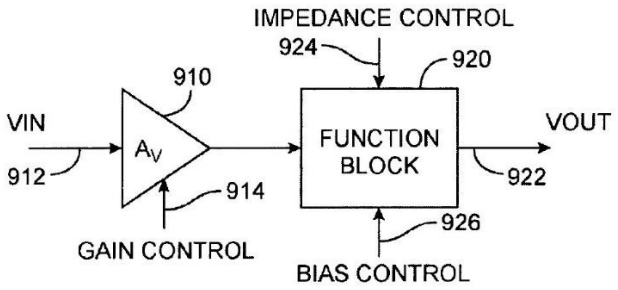

FIG. 9A

45. The Tsividis Patents teach various implementations of these inventions. Information about the desired signal and interferer signal is used to adjust the operating characteristics of the components in the receiver's signal path—for example, the amplifier(s), mixer(s), and/or filter(s)—relative to a worst-case condition. The patents describe multiple separate adjustments, dynamically changing operating parameters, including bias current, impedance, and gain, either separately or in combination, to reduce power dissipation in better-than-worst case conditions. This allows for significant reduction in the power consumed by wireless receivers by responding to the changing signal spectrum conditions experienced by the mobile device.

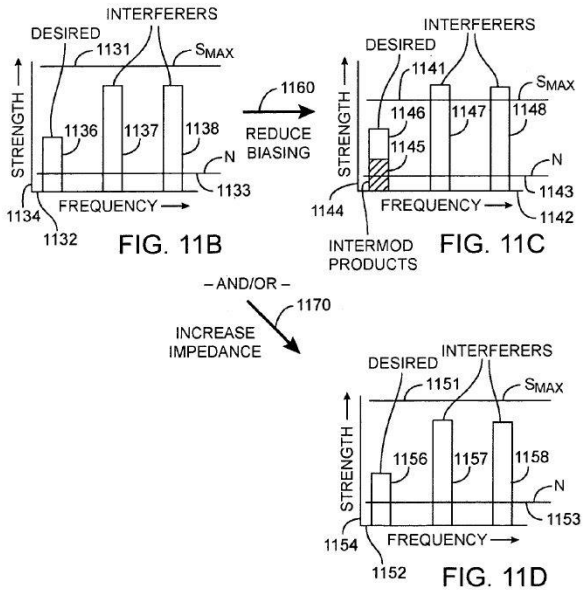

ONE OF ORDINARY SKILL

46. I have been asked to provide my opinion of the level of education and experience that would have been possessed by one of ordinary skill in the art at the time of the parent ’330 Patent, which I take for purposes of this declaration to be as of the current earliest undisputed priority date on March 1, 2003. I understand that factors such as the education level of those working in the field, the sophistication of the technology, the types of problems encountered in the art, prior art solutions to those problems, and the speed at which innovations are made, may help establish the level of skill in the art at the time.

47. I have previously considered and given an opinion on this question with respect to the Tsividis Patents in District Court case *Theta IP, LLC v. Samsung*

Electronics Co. Ltd., No. W-20-CV-00160-ADA (W.D. Tex.), and my opinion has not changed.

48. In my opinion, a person of ordinary skill in the art would have at least a Bachelor's Degree in Electrical or Electronics Engineering, and approximately five years of relevant experience in the design of transceiver architecture, RF systems and components, and analog and mixed signal circuits, as well as experience in control algorithms for such system and familiarity with wireless standards—with additional education substituting for experience and vice versa.

49. As described above, I obtained my Ph.D. in Electrical Engineering in 1986, and I had more than fifteen years of professional experience in the analysis and design of high-performance RF circuits prior to the priority date of the Tsividis Patents. I believe that my own education and experience exceeds that of a person of ordinary skill in the art, under my definition or Lenovo's definition, today and as of March 1, 2003.

50. I understand that Prof. Baker's declarations give a definition of a person of ordinary skill in the art that is similar to mine, but with less professional experience. *See, e.g.*, IPR2023-00697, EX1002, ¶30 ("two or more years").

51. I disagree with Prof. Baker about his opinions concerning what a person of ordinary skill would find disclosed or obvious from the prior art, as detailed below. I have considered both his and my opinion concerning the level of skill, and

my opinions as expressed in this declaration do not change if I instead apply his definition. For example, no person of skill with a degree in Electrical Engineering, and any professional experience with RF electronics, would find disclosure of dynamically changing an impedance in a signal path, from the DC bias circuit of *Rauhala* that Lenovo and Prof. Baker identify.

CLAIM CONSTRUCTION

52. I understand that in claim construction for an *Inter Partes* Review proceeding, the claim terms are to be construed in accordance with the *Phillips* standard that is also used in district court. I understand that the proper construction of a disputed term under that standard is the meaning that would be understood by a person of ordinary skill in the art at the time of the invention, considered in the context of the patent specification.

53. I have been asked to consider how a person of ordinary skill in the art at the time would interpret "an impedance" in the context of the Tsividis Patents. Impedance was a well-known parameter for all Electrical Engineers working in circuits, and the Tsividis Patents use the term consistently with its standard and well-known definition at the time and now.

54. A person of ordinary skill would understand that impedance refers to the opposition of a circuit or circuit component to alternating current. Impedance includes both resistance (from resistors) and reactance (from inductors or capacitors)

to alternating current. Impedance is often symbolized with Z, and is given by the formula $Z = \sqrt{(R^2 + (X_L + X_C)^2)}$, where R is resistance, X_L is inductive reactance, and X_C is capacitive reactance.

55. Impedance is an alternating current (AC) circuit parameter, measured for signals with a frequency component. Its definition as such is taught in introductory EE courses, and is given in many Electronic Circuits dictionaries and textbooks. *See, e.g.*, EX2009, 6 ("The total opposition (i.e., resistance and reactance) a circuit offers to the flow of alternating current at a given frequency;").

56. In general, a person of ordinary skill in the art would understand that impedance is an AC circuit parameter, and would use it accordingly to refer to, *e.g.*, signal path circuits and other circuits carrying alternating or varying currents. A person of ordinary skill in the art would instead use terms like "resistance," "capacitance," and "inductance" when referring to DC circuits such as the supply or bias current controls identified in the Petition from *Rauhala*.

57. A person of ordinary skill in the art would also understand that impedance is an AC circuit parameter in the context of the Tsividis Patents and their claims. Professor Tsividis uses "impedance" consistently, to refer to AC circuit loads in varying-signal driver circuits. EX1001 ('330 Patent), 7:44-52, Fig. 6:

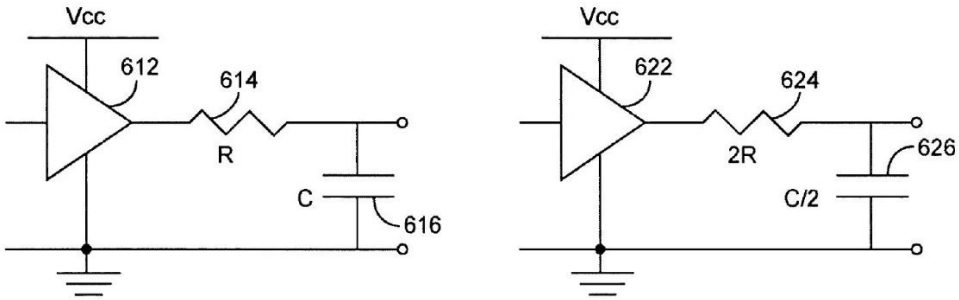

And Professor Tsividis uses "resistance" to refer to circuits changing a DC bias current. 7:35-41 ("by opening switches across portions of the resistance"), 8:12-14 ("increasing a load resistance using switches"), Fig. 5. During prosecution of the '330 Patent with the Examiner, the applicant argued consistently with the standard frequency-domain, AC circuit definition of impedance, and referred to "reducing a switching current in the signal path by dynamically changing an impedance of a component in the signal path." IPR2023-00694, EX1003, 163.

58. In my opinion, a person of ordinary skill in the art reading the Tsividis Patents would understand that "impedance" means "opposition to the flow of alternating current." Such a person would understand and use "impedance" to refer to AC circuits with components that carry sinusoidal signals at a given frequency. Such a person would not understand and use "impedance" to refer to DC circuits with static currents.

RAUHALA

59. I have reviewed EX1004, which purports to be European Patent

Application No. EP0999649A2 to inventor Rauhala ("*Rauhala*").

60. *Rauhala* describes "a method and an arrangement for linearizing a radio receiver" of the sort that could be used in a cellular phone. EX1004, [0001]. It discusses embodiments that each contain a single detector "DET," which can generate "an indication about ***either*** the receive channel signal strength RSS ***or*** the signal strength of a neighboring channel RSS_n. *Id.* [0017], Fig. 4:

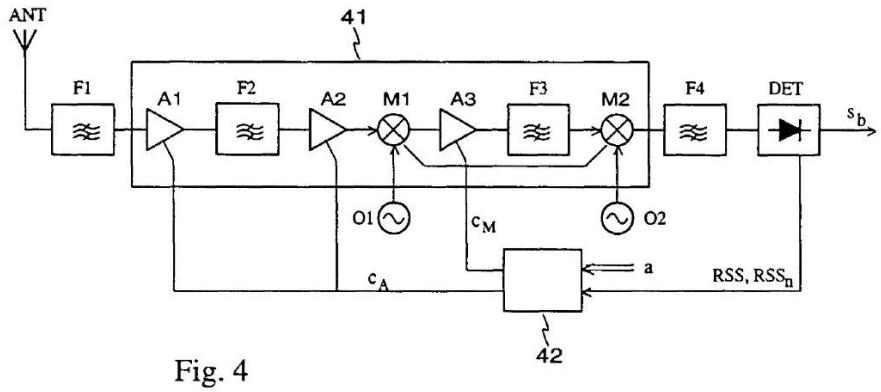

Fig. 4

Rauhala does not give any details about the internal functioning of the detector. But from the common and well-known diode symbol used in the Figures, as well as the description of outputting a "RSS" indication, I would assume that the detector is a simple type of envelope detector known as a "diode detector." This kind of detector was known and often used in RF receivers to measure the total received signal strength power, in a band around the frequency to which the receiver is tuned. Measuring a different signal power with a diode detector requires re-tuning the receiver, including for example by changing the input band-pass filter. This is consistent with the few details given in *Rauhala* about the use of the detector.

61. The "indication" *Rauhala* discloses is simply that the signal strength has or has not crossed a threshold. *Id.* ("Signal RSS has one threshold value S4"). Also, in order to detect the indication about the neighboring channel, *Rauhala*'s receiver apparently must be tuned over to that channel. Only a single detector circuit is ever disclosed, and *Rauhala* discusses the detected channel being selected by the receiver's "tuner control." *Id.*, [0017] ("Signal a from the receiver's tuner control indicates the channel"), Fig. 4 (detail below):

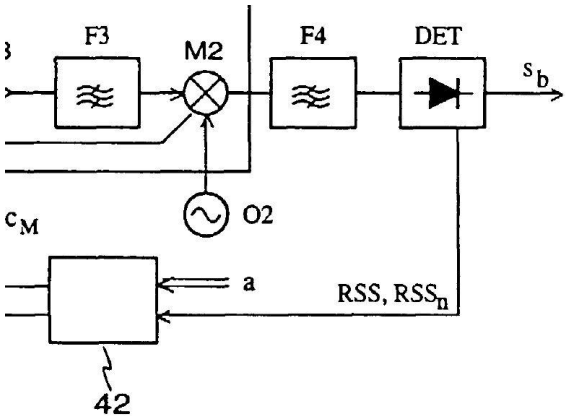

62. *Rauhala* also shows examples of circuits to control supply current to an amplifier 61, and to a mixer 71. *Id.*, Fig. 6, [0022] ("supply current control circuit 62), Fig. 7, [0023] ("control circuit 72 for the supply current I"):

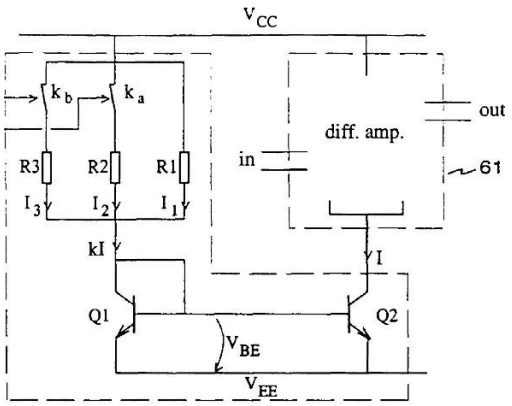

Fig. 6

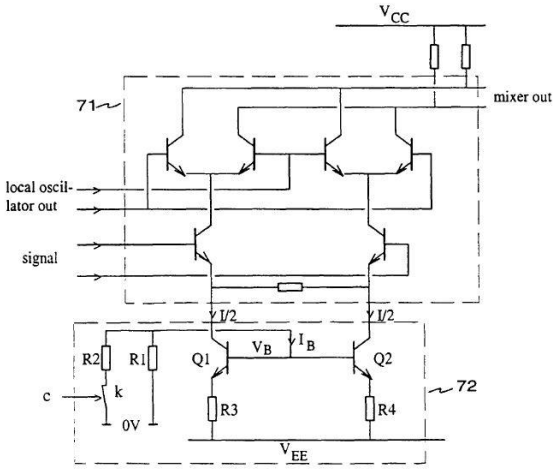

Fig. 7

63. As can be seen from the figures, the bias current setting portions of circuit 62 of Figure 6 and circuit 72 of Figure 7 are not in the signal path, which proceeds from "in" to "out" of amplifier 61 in Figure 6, and proceeds from "signal" up to "mixer out" of mixer 71 in Figure 7. *See, e.g., id.*, Fig. 7 (annotated below):

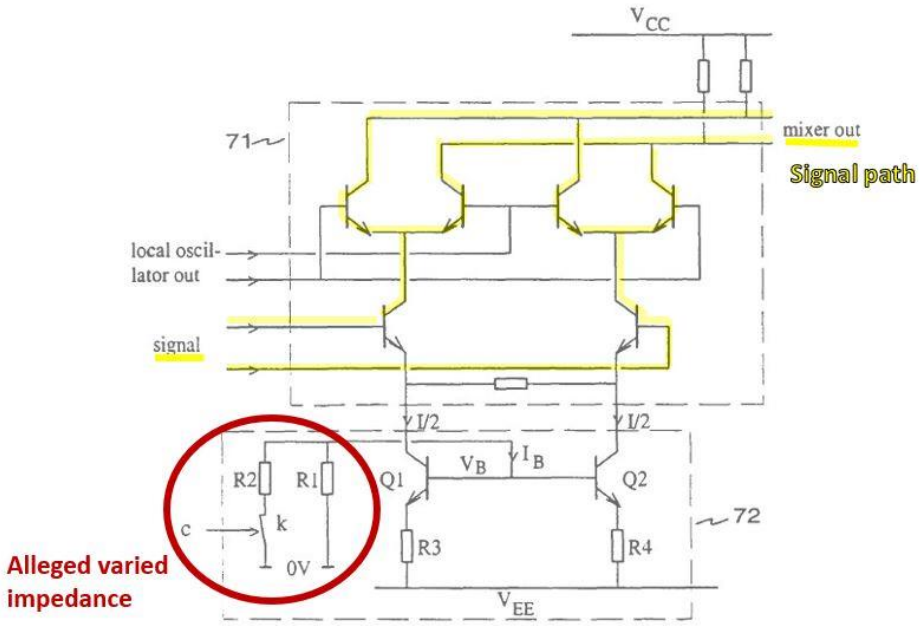

Fig. 7

SPECIFIC RESPONSES TO PROF. BAKER'S OPINIONS

Varying an Impedance

64. Lenovo and Prof. Baker point to resistors R1 and R2 of *Rauhala* Figure 7, controlling bias current I_B between static values V_B/R1 or V_B/R1 + V_B/R2, as supposedly disclosing the variation of impedance in the signal path as claimed in the '330 Patent. IPR2023-00694, EX1002, ¶¶126-129. I disagree, for multiple reasons.

65. As I stated above, impedance is understood as an AC circuit parameter. But a person of ordinary skill would understand that there are no AC currents, or frequency components, in the circuit for setting DC bias current I_B in *Rauhala*'s Figure 7, or the circuit for setting DC bias current kI in *Rauhala*'s Figure 6. A person of ordinary skill would not understand, or refer to, these circuits in terms of

impedance.

66. Also, as I mentioned and showed above, the portion of supply current control circuit 72 used for setting bias current I_B, is not in the signal path, and would not be understood to be so by a person of ordinary skill in the art.

67. Bias currents I_B of *Rauhala*'s Figure 7 and kI of *Rauhala*'s Figure 6 would not be understood by a person of ordinary skill in the art to be or relate to a "switching current" as the applicant used that term during prosecution of the '330 Patent, or a signal "drive" current as described in the discussion of Figure 6 of the Tsividis Patents. *See, e.g.*, IPR2023-00694, EX1001 ('330 Patent), 3:24-27, 7:44-59 ("FIG. 6 is an example of how a circuit's impedances may be scaled to reduce drive currents")

68. For these reasons, it is my opinion that the elements of claims of the Tsividis Patents that require varying an impedance, or varying an impedance in the signal path or to reduce a switching or drive current, in response to determined signal conditions, are not disclosed by *Rauhala*. It is also my opinion that these impedance varying elements would not be obvious to a person of ordinary skill in the art from *Rauhala*'s teachings. *See* IPR2023-00694, EX1001 ('330 Patent) (claims 1, 23, 29 and dependent claim 30); IPR2023-00697, EX1001 ('825 Patent) (claim 8).

Determining

69. Lenovo and Prof. Baker point to *Rauhala's* single detector circuit

(DET) as supposedly disclosing the "a circuit for determining a signal strength of the interferer signal and a circuit for determining a signal strength of the desired signal" elements, as claimed in the '825 Patent. *See* IPR2023-00697, EX1002, ¶83. I disagree.

70. As an initial matter, *Rauhala*'s "detector DET" is one circuit, that can be tuned to get an indication about "either" one channel, or another. EX1004, [0017]. Re-tuning the receiver changes what is being measured. This means that *Rauhala*'s system cannot determine a desired signal strength "and" an interferer signal strength within the same received spectrum. In a dynamic system, this is a significant impractical handicap, as signal strengths could change while the detector was being re-tasked. The total signal power in a band around a neighboring channel when tuned to that channel is not a direct measurement of interference received when the receiver is tuned to a first channel. The Tsividis Patents teach and claim a circuit for determining a desired signal strength and a circuit for determining an interferer signal strength, two components of a received spectrum. This configuration, not disclosed in *Rauhala*, allows for simultaneous determination and for dynamic adjustments that incorporate information about both signals or their direct comparison.

71. *Rauhala* does not disclose any detection of signal strength beyond the indication that a threshold has been crossed. *See, e.g.*, *id.*, [0017] ("Signal RSS has

one threshold value S4 which corresponds to a relatively low receive signal strength").

72. Because of *Rauhala*'s retuning requirement, a person of skill in the art would not understand its single detector to be able to act as both determining circuits of these claims. The alleged second measurement, taken only after tuning to center the receiver on a new channel, would not be a measurement of the original received interferer signal—just as the static received while tuned to a particular FM radio station is not measured by tuning to and checking the signal strength of a different radio station. For these reasons, it is my opinion that the elements of claims of the Tsividis Patents that require a circuit for determining a signal strength of the interferer signal and a circuit for determining a signal strength of the desired signal, are not disclosed by *Rauhala*. *See* IPR2023-00697, EX1001 ('825 Patent) (claims 1, 3).

Comparing

73. Lenovo and Prof. Baker point to mention in *Rauhala* of a signal-to-noise ratio (SNR), as supposedly disclosing the comparing the signal strength of the desired signal and the signal strength of the interferer signal, as claimed in the '202 Patent. *See* IPR2023-00698, EX1002, ¶120. I disagree.

74. *Rauhala* does not disclose any particular method for "calculating its signal-to-noise ratio." EX1004, [0014], Fig. 2.

75. As discussed above, *Rauhala* does not disclose any detection of signal strength beyond the indication that a threshold has been crossed. *See, e.g.*, *id.*, [0017] ("Signal RSS has one threshold value S4 which corresponds to a relatively low receive signal strength"). A mere indication of a threshold crossing is not suitable for directly comparing two numbers. For example, knowing only that A > 3 and B > 5, it is not possible to calculate or infer a numerical or even logical comparison between A and B.

76. A person of ordinary skill in the art would understand that there are multiple ways to calculate SNR, including those that derive from bit-error-rate or other error estimates (*e.g.*, block error rate, frame error rate). These error rate measures are known to correlate to, and could be used to estimate, SNR—but without comparing signal strengths.

77. In addition, A person of ordinary skill in the art would understand that there are multiple measures of noise and/or interference that may be used in a system, other than signal-to-noise ratio "SNR." For example, RF engineers sometimes also would refer to a signal-to-interference ratio "SIR," or a signal-to-interference-plus-noise ratio "SINR". *Rauhala* discusses "noise and interference." EX1004, [0002]. With this understanding, and lack of detail in *Rauhala*, a person of ordinary skill would not find a single unexplained mention of "SNR" to disclose comparing with the signal strength of an interferer signal.

78. Without more, *Rauhala*'s simple instruction to calculate SNR does not explicitly disclose comparing a desired signal strength to an interferer signal strength. Because it is not clear what *Rauhala* is referring to by "N" (for noise), it is not explicitly or necessarily using "an interferer signal strength" to calculate "SNR." Also, because the SNR could be calculated in ways other than what Dr. Baker describes, including with various bit or block error determinations that do not involve a signal strength comparison step, his assumed calculation method is not inherently disclosed either.

79. For these reasons, it is my opinion that the elements of claims of the Tsividis Patents that require comparing the strength of the desired signal and the strength of the interferer signal, are not disclosed by *Rauhala*. *See* IPR2023-00698, EX1001 ('202 Patent) (claims 7, 11, 13, 19 and dependent claims 8-10 and 20-21).

80. For all of the reasons given herein, in my opinion the challenged claims of the Tsividis Patents all contain elements that are not anticipated by *Rauhala*, and the challenged claims are also not rendered obvious by *Rauhala*, alone or in the combinations described in the Petitions.

CONCLUSION

81. This declaration and the opinions and statements herein are made to the best of my knowledge and understanding, based on the material available to me at the time. All statements made on my knowledge herein are true and all statements

made on my belief are believed to be true.

Executed this 29th day of January, 2024.

By: _____
Lawrence E. Larson, Ph.D