Petitioner's Oral Hearing Demonstratives

Samsung Electronics Co. LTD. (Petitioner)
v.
DoDots Licensing Solutions, LLC (Patent Owner)

Petitioner Demonstratives

8,020,083 | IPR2023-00621 | 39843-0148IP1
8,510,407 | IPR2023-00701 | 39843-0149IP1
9,369,545 | IPR2023-00756 | 39843-0150IP1

Before Hon. Grace Karaffa Obermann, Kevin C. Trock, Amber L. Hagy, and Sharon Fenick

FISH.

DEMONSTRATIVE EXHIBIT – NOT EVIDENCE

Exhibit 1046
Samsung v. DoDots
IPR2023-00701

Instituted Grounds

’083 IPR
IPR2023-00621

Ground	Claim(s)	35 U.S.C. § 103
1A	1-5, 9-13	Obvious over Brown
1B	1-16	Obvious over Brown
2	1-16	Obvious over Shimada in view of Buchholz

’407 IPR*
IPR2023-00701

Ground	Claim(s)	35 U.S.C. § 103
1A	1-4, 7-11, 13-16, 19-23	Obvious over Brown
1B	1-4, 7-16, 19-24	Obvious over Brown and Wecker
1C	5-6, 17-18	Obvious over Brown and Beer, or Brown, Wecker, and Beer
2	1-24	Obvious over Shimada and Buchholz

* The record from IPR2023-00621 is primarily referenced throughout to address topics covered in all three IPRs

Instituted Grounds

’545 IPR*
IPR2023-00756

Ground	Claim(s)	35 U.S.C. § 103
1A	1-4, 6-10, 13-15	Obvious over Brown and Wecker
1B	5, 11-12, 16-21	Obvious over Brown, Wecker, and Beer
2A	1-4, 6-7, 9-10, 13-15	Obvious over Shimada and Buchholz
2B	5, 8, 12	Obvious over Shimada, Buchholz, and Darnell
2C	11, 16-21	Obvious over Shimada, Buchholz, and Krishna

* The record from IPR2023-00621 is primarily referenced throughout to address topics covered in all three IPRs

3

Table of Contents

Background/Overview	5
A POSITA would have combined Brown and Wecker	13
Features Alleged to be Lacking in Brown and Brown-Wecker	28
A POSITA would have combined Brown-Beer and Brown-Wecker-Beer	79
A POSITA would have combined Shimada and Buchholz	89
Features Alleged to be Lacking in Shimada-Buchholz	96
A POSITA would have combined Shimada, Buchholz, and Darnell	123
A POSITA would have combined Shimada, Buchholz, and Krishna	128
Secondary considerations	135

Background / Overview

DEMONSTRATIVE EXHIBIT – NOT EVIDENCE

The Challenged Patents

’083 Patent

SUMMARY OF THE INVENTION

The present invention is directed to systems and methods by which internet content may be authored and distributed. The invention provides for a structure defined herein as an Application Media Package. Application Media Packages are web browser-readable code that is executed on a non-browser-based installed client application. The client application, referred to herein as an Application Media Viewer or Home Dot, executes independently from a web browser. The Application Media Viewer parses and executes the Application Media Package code to create the user experience. The terms Application Media Package and Dot are use synonymously herein.

SAMSUNG-1001 (’083 IPR), 3:48-59; (cited in Petition (’083 IPR), 6)

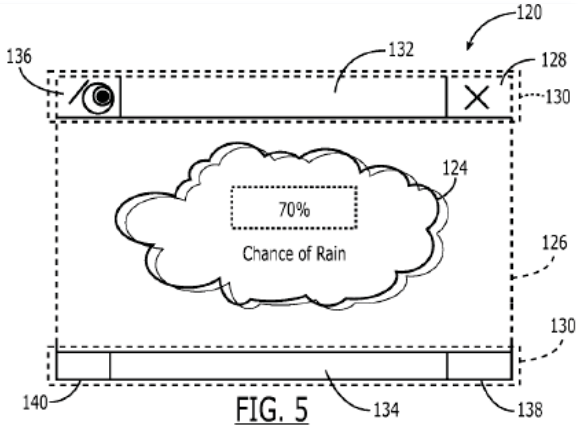

SAMSUNG-1001, FIG. 5

SAMSUNG-1001 (’083 IPR), FIG. 5; (cited in Petition (’083 IPR), 6)

’407 Patent

A software component for accessing and displaying time-varying Internet content includes a definition for rendering a graphical user interface and a URL pointing to the time-varying Internet content to be downloaded and presented within said user interface. A component provider may create displays of Internet content which vary as a function of the varying of the time-varying Internet content. In one example, the graphical user interface includes an image, and the image varies in order to illustrate the varying of the time-varying data.

SAMSUNG-1001 (’407 IPR), Abstract; (cited in Petition (’407 IPR), 5)

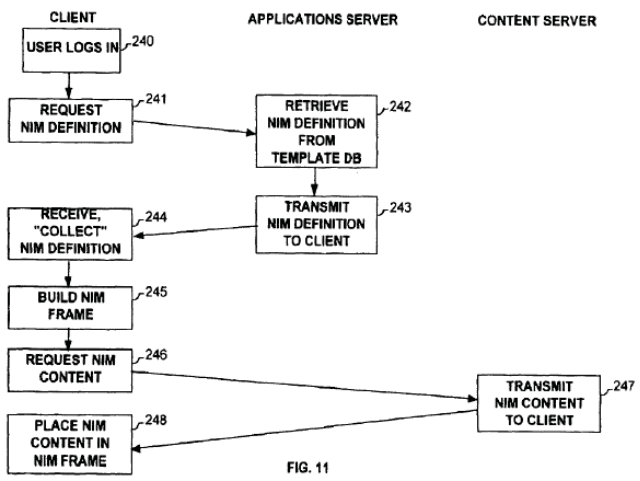

SAMSUNG-1001, FIG. 11

SAMSUNG-1001 (’407 IPR), FIG. 11; (cited in Petition (’407 IPR), 7)

The Challenged Patents

'545 Patent

A method for accessing and displaying network content employs an informational component which includes a definition for rendering a graphical user interface within which content may be presented outside of and without utilization of another application. The informational component also includes one or more definitions of content locations from which content elements may be transmitted over a network and presented within the graphical user interface. A provider of an informational component or informational components may thus create customized displays within which intended content may be rendered. An application component may be used in association with an informational component or informational components to manage the collection, organization, sharing, and rendering of plurality of the informational component(s).

SAMSUNG-1001 ('545 IPR), Abstract; (cited in Petition ('545 IPR), 5)

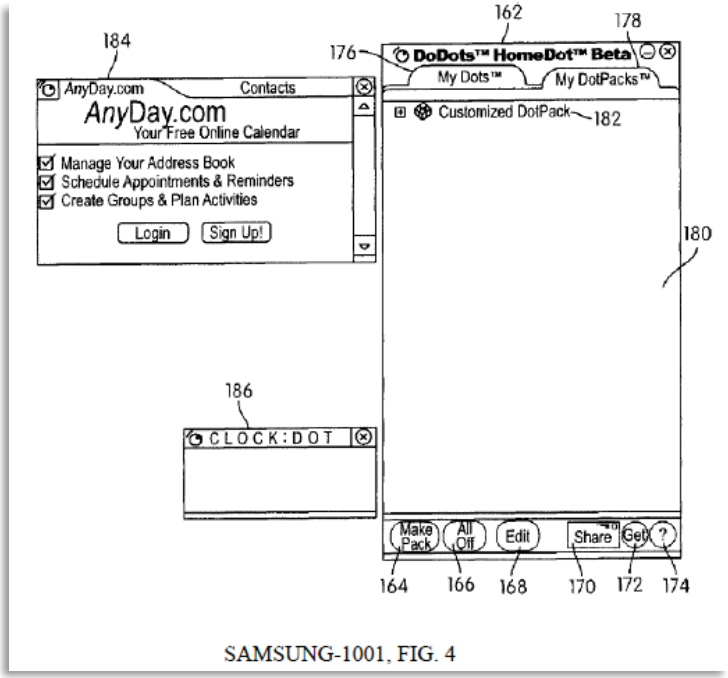

SAMSUNG-1001 ('545 IPR), FIG. 4; (cited in Petition ('545 IPR), 6)

DEMONSTRATIVE EXHIBIT – NOT EVIDENCE

The ’083 Patent

1. A client device, the client device comprising:

electronic storage having stored thereon a plurality of networked information monitor templates defining a plurality of networked information monitors, the plurality of networked information monitor templates comprising a first networked information monitor template defining a first networked information monitor, wherein the first networked information monitor template comprises:

(1) a content reference that comprises a network location at which content for the first networked information monitor is accessible via a TCP/IP protocol;

(2) a definition of a graphical user interface of the first networked information monitor that lacks controls for manually navigating a network, and that includes a frame within which content received from the network location can be displayed, and frame characteristics defining one or more a color, a size, or a position on the electronic display of the frame; and

(3) instructions configured (i) to cause the first networked information monitor to request content from the network location in the content reference via the TCP/IP protocol, and (ii) to cause the first networked information monitor to generate the graphical user interface of the first networked information monitor with the content received from the network location via the TCP/IP protocol within the frame;

an electronic display; and

one or more processors configured to access the first networked information monitor template, and to execute the first networked information monitor template such that the graphical user interface of the first networked information monitor is presented to a user on the electronic display having content received from the content reference therein.

SAMSUNG-1001 (’083 IPR), Claim 1 (*see* Petition (’083 IPR), 19-41)

DEMONSTRATIVE EXHIBIT – NOT EVIDENCE

The ’407 Patent

1. A client computing device configured to access content over a network, the client computing device comprising:

electronic storage configured to store networked information monitor template associated with a networked information monitor, the networked information monitor template having therein a definition of a viewer graphical user interface having a frame within which time-varying content in a web browser-readable language may be presented on a display associated with the client computing device, wherein the frame of the viewer graphical user interface lacks controls for enabling a user to specify a network location at which content for the networked information monitor is available; and

one or more processors configured to execute one or more computer program modules, the one or more computer program modules being configured to access the networked information monitor defined by the networked information monitor template, wherein accessing the networked information monitor defined by the networked information monitor template results in:

transmission, over a network to a web server at a network location, of a content request for content to be displayed within the frame of the viewer graphical user interface defined by the networked information monitor template;

reception, over the network from the web server at the network location, of content transmitted from the web server in response to the content request, the content being time-varying;

presentation, on the display, of the viewer graphical user interface defined by the networked information monitor template outside of and separate from any graphical user interface of any other application; and

presentation, on the display within the frame of the viewer graphical user interface defined by the networked information monitor, of the time-varying content received from the web server.

’ SAMSUNG-1001 (’407 IPR), Claim 1 (*see* Petition (’407 IPR), 16-43)

DEMONSTRATIVE EXHIBIT – NOT EVIDENCE

The ’545 Patent

1. A computer-implemented method of obtaining content over a network and displaying the content to a user, the method being implemented in a client computing device in operative communication with a server over a network, the client computing device including electronic storage, a display, and one or more processors configured to execute one or more computer program modules, the method comprising:

transmitting a request to the server over the network, the request requesting networked information monitor template;

receiving the requested networked information monitor template from the server over the internet, the requested networked information monitor template having been transmitted from the server over the network responsive to the transmitted request, the networked information monitor template comprising:

a definition of a viewer graphical user interface within which content in a web browser-readable language may be presented on the display of the client computing device; and

a definition of a first content element for the networked information monitor template, the definition of the first content element referencing a first network location from which the first content element for the networked information monitor template is served over the network;

responsive to instructions included in the requested networked information monitor template, presenting the viewer graphical user interface defined by the networked information monitor on the display of the client computing device separate from and outside of any other graphical user interface that includes user controls for specifying the first network location from which the first content element for the networked information monitor is served over the network;

responsive to instructions included in the requested networked information monitor template, transmitting over the network a first content request to the first network location referenced by the definition of the first content element for the networked information monitor template;

receiving, over the network, the first content element transmitted responsive to the first content request;

presenting the received the first content element in the viewer graphical user interface defined by the networked information monitor template, wherein the definition of the viewer graphical user interface and/or the first content element define all controls for enabling a user to interact with the first content element through the viewer graphical user interface.

SAMSUNG-1001 (’545 IPR), Claim 1 (*see* Petition (’545 IPR), 14-38

DEMONSTRATIVE EXHIBIT – NOT EVIDENCE

Networked Information Monitor – "NIM"

Central to the present invention is the concept of an Application Media Package. As used herein, the term Application Media Package refers to a component which includes a fully configurable frame with one or more controls; the frame through which content is optionally presented. The fully configurable frame utilized in accordance with the invention stands in contrast to present web browsers, which are branded by the browser vendor and which have limited means by which to alter the controls associated with the browser.

SAMSUNG-1001 ('083 IPR) 5:40-48

delivered to the client computer associated with the user. The processed user profile includes references to the networked information monitors (NIMs). As used herein, the term networked information monitor or NIM refers to a fully configurable frame with one or more controls; the frame through which content is optionally presented. The fully configurable frame utilized in accordance with the invention stands in contrast to present web browsers, which are branded by the browser vendor and which have limited means by which to alter the controls associated with the browser.

SAMSUNG-1001 ('407 IPR) 5:19-28; ('545 IPR) 4:54-63

"a fully configurable frame, with one or more controls, through which content is presented to the user."

Petition ('083 IPR), 3-4 (citing SAMSUNG-1001 ('083 IPR) 5:41-44)

DEMONSTRATIVE EXHIBIT – NOT EVIDENCE

NIM Template

age. Application Media Package templates database **74** includes a large number of Application Media Package templates. Each Application Media Package template defines the characteristics of a specific Application Media Package, including fully configurable frame characteristics, viewer and control characteristics, and Application Media Package content references.

SAMSUNG-1001 ('083 IPR) 7:17-23

templates database **74** for the specified NIM. NIM templates database **74** includes a large number of NIM templates. Each NIM template defines the characteristics of a specific NIM, including fully configurable frame characteristics, viewer and control characteristics, and NIM content references.

SAMSUNG-1001 ('407 Patent) 6:66-7:2; ('545 IPR) 6:33-37

"a data structure that defines the characteristics of a NIM, including the NIM frame, view, and control characteristics, and that excludes executable applications/compiled code."

Petition ('083 IPR), 4-5 (citing SAMSUNG-1001 ('083 IPR) 7:19-23)

DEMONSTRATIVE EXHIBIT – NOT EVIDENCE

A POSITA would have combined Brown and Wecker (all IPRs)

FISH.

DEMONSTRATIVE EXHIBIT – NOT EVIDENCE

Brown (US 6,278,448)

Brown's Composite Desktop and its Desktop Components

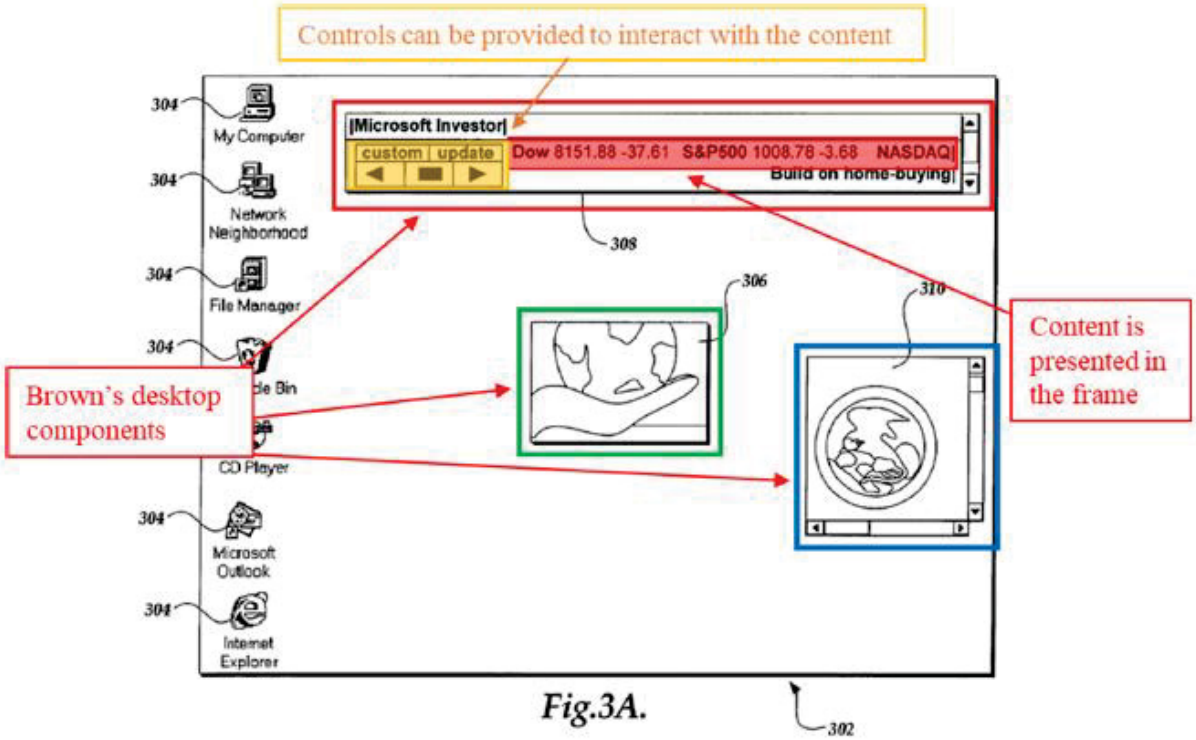

SAMSUNG-1005, FIG. 3A (annotated)

SAMSUNG-1005, FIG. 3A; (annotated, cited in Petition ('083 IPR), 25)

"A method of creating a composite desktop built from Web content retrieved from one or more Web sites is disclosed. A component on a Web page can be selected and positioned on the composite desktop. …"

SAMSUNG-1005, Abstract (cited in Petition ('083 IPR), 8)

DEMONSTRATIVE EXHIBIT – NOT EVIDENCE

Brown (US 6,278,448)

Brown's HTML Instructions – Templates for Desktop Components

6. <IMG id=3 name="DeskMovr" src="http://www.microsoft.com/ie/images/ulg/ulg_ie40.jpg"
7. resizeable="XY"
8. subscribed_url="http://www.microsoft.com/ie/images/ulg/ulg_ie40.jpg"
9. style="BACKGROUND: transparent; position:absolute; LEFT: 347; TOP: 236; WIDTH: 120; HEIGHT: 82; Z-INDEX: 1006">

10. <IFRAME id=7 MARGINWIDTH=0 MARGINHEIGHT=0 name="DeskMovrW" src="http://www.uspto.gov/"
11. resizeable="XY"
12. subscribed_url="http://www.uspto.gov/"
13. frameborder=0 style="BACKGROUND: transparent; position:absolute; LEFT:620; TOP:254; WIDTH:156; HEIGHT:150; Z-INDEX:1014"></IFRAME>

14. <IFRAME id=8 MARGINWIDTH=0 MARGINHEIGHT=0 name="DeskMovrW" src="http://www.microsoft.com/ie/ie40/gallery/ticker.htm"
15. resizeable="XY"
16. subscribed_url="http://www.microsoft.com/ie/ie40/gallery/cdf/g_stock.cdf"
17. frameborder=0 style="BACKGROUND: transparent; position:absolute; LEFT:178; TOP:26; WIDTH:516; HEIGHT:57; Z-INDEX:1016"></IFRAME>

Control characteristics

Brown's HTML instructions that define desktop components

A frame which displays a view

SAMSUNG-1005, 11:56-67, 12:1-10 (annotated)

SAMSUNG-1005, 11:56-67, 12:1-10 (annotated, cited in Petition ('083 IPR), 29)

FISH.

DEMONSTRATIVE EXHIBIT – NOT EVIDENCE

Brown (US 6,278,448)

Brown's Content Subscriptions for Desktop Components

```
14.  <IFRAME  id=8  MARGINWIDTH=0
     MARGINHEIGHT=0  name="DeskMovrW"  src=
     "http://www.microsoft.com/ie/ie40/gallery/ticker.htm"
15. resizeable="XY"
16.  subscribed_url="http://www.microsoft.com/ie/ie40/
     gallery/cdf/g_stock.cdf"
17. frameborder=0 style="BACKGROUND: transparent;
     position:absolute;  LEFT:178;  TOP:26;  WIDTH:516;
     HEIGHT:57; Z-INDEX:1016"></IFRAM
```

A URL corresponding to a CDF file.

SAMSUNG-1005, 12:1-8 (annotated)

SAMSUNG-1005, 12:1-8 (annotated, cited in Petition ('083 IPR), 33)

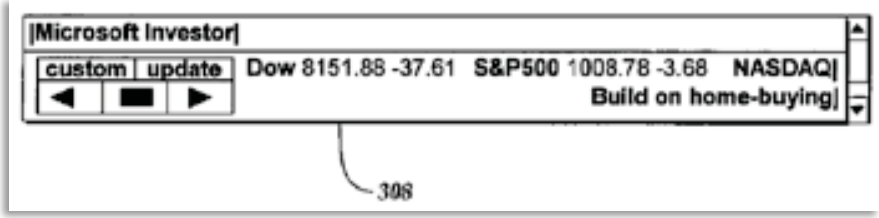

SAMSUNG-1005, FIG. 3A; (cropped, cited in Petition ('083 IPR), 24)

"The HTML instructions on line 14 includes a URL corresponding to a CDF file. CDF files are used to implement "subscriptions" in which information is regularly retrieved and updated within the active desktop component 308."

SAMSUNG-1005, FIG. 13:4-8; (cited in Petition ('083 IPR), 32–33)

DEMONSTRATIVE EXHIBIT – NOT EVIDENCE

Brown (US 6,278,448)

Brown allows a user to add, delete, or modify Desktop Components

Schmidt Testimony
"Brown's desktop shell, operated by the processing unit …, includes a 'shell interface 214, in order to add [a] corresponding component to the composite desktop,' the component being selected "on [a] Web page."

SAMSUNG-1003 ('083 IPR), ¶92 (cited in Petition ('083 IPR), 51)

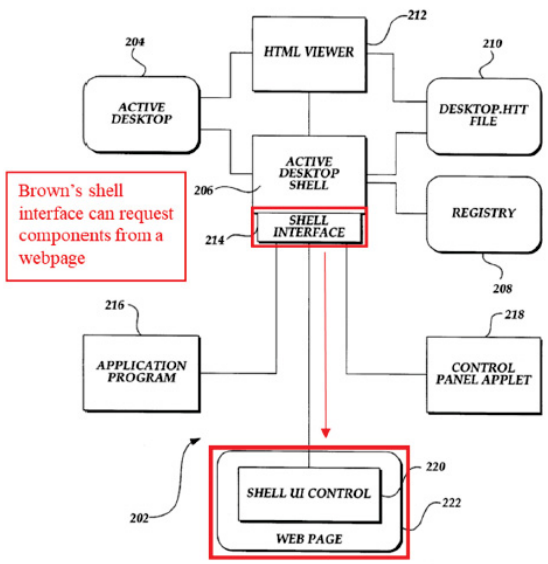

Fig.2.

SAMSUNG-1005, FIG. 2 (annotated)

SAMSUNG-1005, FIG. 2 (annotated, cited in Petition ('083 IPR), 52)

DEMONSTRATIVE EXHIBIT – NOT EVIDENCE

Wecker (US 6,449,638)

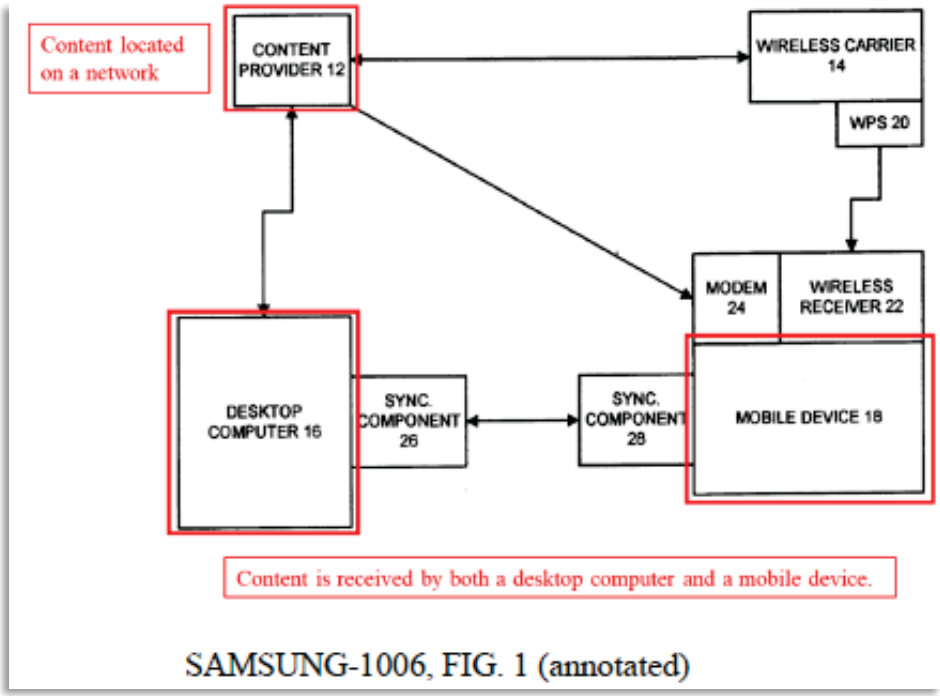

SAMSUNG-1006, FIG. 1; (annotated, cited in Petition ('083 IPR), 11)

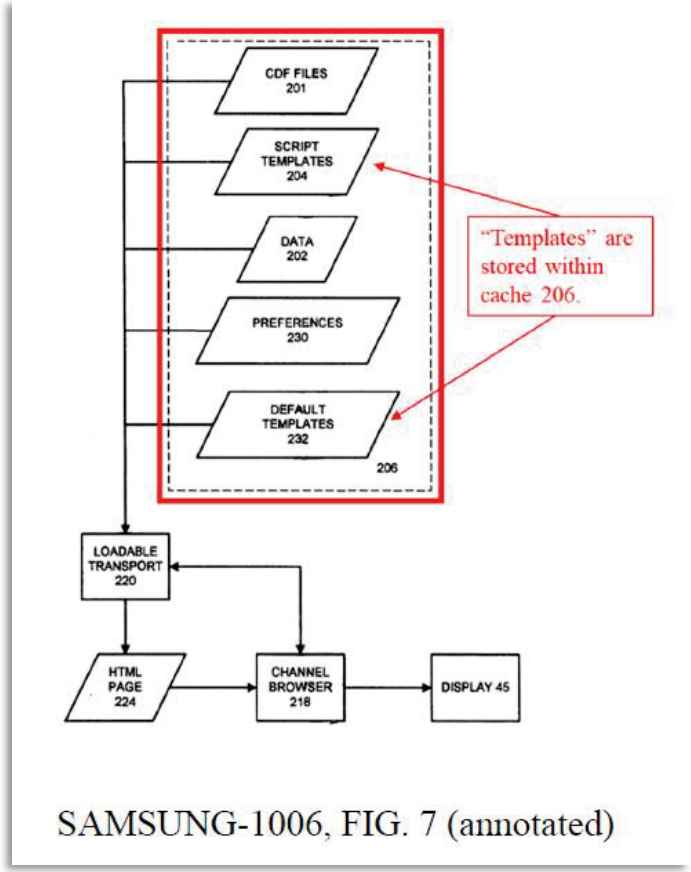

SAMSUNG-1006, FIG. 7; (annotated, cited in Petition ('083 IPR), 30)

"… a single portion of content (such as a web page or a web site) is referred to herein as a mobile channel. A mobile channel is a self describing web site that contains all the information necessary for efficient download of web content to mobile device."

SAMSUNG-1006, 3:6-14 (cited in Petition ('083 IPR), 12-13)

DEMONSTRATIVE EXHIBIT – NOT EVIDENCE

The Brown-Wecker Combination

Wecker's channel-based subscriptions would have provided a way to download Brown's HTML instructions:

Schmidt Testimony

"A POSITA also would have found it obvious that Brown's desktop components could be implemented as mobile channels, such that a user could **download desktop components, and their associated HTML instructions, to their composite desktop**." SAMSUNG-1005, 7:21-23; SAMSUNG-1006, 3:6-14

SAMSUNG-1003 ('083 IPR), ¶35 (cited in Petition ('083 IPR), 13)

Selker Testimony

Q. "Is HTML code capable of being stored in memory and then accessed later?"

A. "Absolutely. Yes."

SAMSUNG-1027 ('083 IPR), 92:4-6 (cited in Reply ('083 IPR), 4)

Greenspun Testimony

"In fact, because Brown's disclosure is so similar to the '083 patent, the combination relies on just two basic techniques that were well-known and part of a POSITA's general knowledge: **(1) storing a template in memory and (2) requesting a template from a remote computer**. Wecker clearly discloses these concepts and, when Brown's disclosure is viewed in the context of Wecker, it would have been obvious to implement Brown's templates using these two basic techniques." SAMSUNG-1003, ¶¶35-42.

SAMSUNG-1026 ('083 IPR), ¶46 (cited in Reply ('083 IPR), 1-2)

DEMONSTRATIVE EXHIBIT – NOT EVIDENCE

The Brown-Wecker Combination

Wecker's script templates are similar in objective to Brown's HTML instructions:

Schmidt Testimony
"First, a POSITA would have recognized that Wecker's mobile channel 'script files,' also referred to as 'templates,' are data structures that are **similar in objective to the 'HTML instructions' that define Brown's 'desktop components.'"** SAMSUNG-1005, 12:61-62; SAMSUNG-1006, 3:17-20; SAMSUNG-1003, ¶37.

SAMSUNG-1003 ('083 IPR), ¶37 (cited in Petition ('083 IPR), 14)

Greenspun Testimony
"Brown uses templates to build 'a composite desktop…,' and Wecker uses templates to produce 'a mobile channel ….' Petition, 9-13. **Brown's templates are similar to Wecker's templates because they each define the visual appearance of data on a screen."** Petition, 10-12; SAMSUNG-1006, 2:8-36, 3:17-20.

SAMSUNG-1026 ('083 IPR), ¶46 (cited in Reply ('083 IPR), 2)

Brown's HTML Instructions define the appearance of Desktop components

> Lines 14–17 comprise HTML instructions that describe the active desktop component **308** (FIG. 3A). Preferably,

SAMSUNG-1005, 12:61-62 (cited in Petition ('083 IPR), 14)

Wecker's script templates define the appearance of data on a screen

> The script files contain script which defines templates which specify the appearance of the data on the screen of mobile device **18**. Scripts are preferably written in visual basic script (VBS).

SAMSUNG-1006, 3:17-20 (cited in Petition ('083 IPR), 14)

DEMONSTRATIVE EXHIBIT – NOT EVIDENCE

The Brown-Wecker Combination

Brown itself suggests accessing templates from "remote computers":

The present invention provides a mechanism for creating or customizing a user interface composite desktop by selecting various components and adding them to a desktop. The composite desktop is implemented as a Web page, and the creation of the composite desktop includes building a composite Web page made up of one or more components selected and retrieved from one or more locations. The locations may include Web pages, local storage media, or remote computers. A component can be a static graphic

SAMSUNG-1005, 4:13-21 (cited in Petition ('083 IPR), 15)

computers, and the like. The invention may also be practiced in distributed computing environments where tasks are performed by remote processing devices that are linked through a communications network. In a distributed com-

SAMSUNG-1005, 4:49-52 (cited in Reply ('083 IPR), 2)

The personal computer **20** operates in a networked environment using logical connections to one or more remote computers, such as remote computers **49** and **60**. Each

SAMSUNG-1005, 5:45-47 (cited in Reply ('083 IPR), 2)

Schmidt Testimony
"Second, a POSITA would have recognized or found obvious that, because **Brown's desktop components are retrieved from 'remote computers,'** such components would also be accessed via Wecker's 'wireless push server' or 'remote computer.'"

SAMSUNG-1003 ('083 IPR), ¶39 (cited in Petition ('083 IPR), 15)

Greenspun Testimony
"Benefits of remotely managing templates and making them available for download were well-known and would have led a POSITA to implement these techniques in Brown, **particularly because Brown already suggests local storage and remote download of its templates."**

SAMSUNG-1026 ('083 IPR), ¶46 (cited in Reply ('083 IPR), 2)

DEMONSTRATIVE EXHIBIT – NOT EVIDENCE

The Brown-Wecker Combination

Wecker would have provided benefits to Brown's existing system.

Greenspun Testimony
"Moreover, a POSITA would have been motivated to combine Wecker with Brown to **improve data transfer times, increase usability, standardize interfaces across different devices, reduce client-side storage requirements, and/or to capitalize on the growing need to display internet content in a customizable way**. Wecker explains that, '[b]y separating the script from the data in the web content, web content can be transmitted to mobile device 18 over very low bit rate channels' and that, 'since an individual file is typically much smaller than the script files, the data can be updated quite frequently, giving the user of mobile device 18 updated web content information, without transmitting new script."

SAMSUNG-1003 ('083 IPR), ¶41 (cited in Petition ('083 IPR), 17-18)

Wecker's methods improve data transfer

By separating the script from the data in the web content, web content can be transmitted to mobile device **18** over very low bit rate channels. The script will only typically need to be transmitted very infrequently. Also, since an individual file is typically much smaller than the script files, the data can be updated quite frequently, giving the user of mobile device **18** updated web content information, without transmitting new script. Thus, the separation of the script and data allows the transmission of web content information in a very efficient manner over low bit rate channels.

SAMSUNG-1006, 4:53-62 (cited in Petition ('083 IPR), 17-18)

client, this method is beneficial. In particular, the present system and method is able to deliver content in small segments of data instead of full HTML pages. This incremental approach makes it efficient and economical to update time-critical information, such as stock market values during peak network hours. The system and method also allows the use of default script templates **232** stored in the cache **206**.

SAMSUNG-1006, 10:46-52 (cited in Reply ('083 IPR), 2–3)

DEMONSTRATIVE EXHIBIT – NOT EVIDENCE

The Brown-Wecker Combination

A POSITA would have reasonably believed two Microsoft references, describing similar operating systems and directed to similar subject matter, would be compatible:

Schmidt Testimony
"Moreover, both Brown and Wecker describe the Windows 95 operating system as a suitable operating system that can implement their techniques. SAMSUNG-1005, 6:26-32; SAMSUNG-1006, 8:15-21. Finally, both Brown and Wecker are assigned to the 'Microsoft Corporation' and a POSITA would therefore have **reasonably expected their techniques to be compatible as the assignee would have been motivated by business reasons to provide commonality between their products."** SAMSUNG-1005, Cover; SAMSUNG-1006, Cover.

SAMSUNG-1003 ('083 IPR), ¶38 (cited in Petition ('083 IPR), 15)

Greenspun Testimony
"The combination of Brown and Wecker is a simple, straightforward combination of **two Microsoft patents that are both directed to improving delivery of Internet content to user devices.** As Dr Schmidt and I explain, the references have several similarities that would have led a POSITA to consider their disclosures together and turn to Wecker for implementation techniques that would have been beneficial to Brown's system. SAMSUNG-1003, ¶¶35-42." Petition, 10-12; SAMSUNG-1006, 2:8-36, 3:17-20.

SAMSUNG-1026 ('083 IPR), ¶46 (cited in Reply ('083 IPR), 1)

DEMONSTRATIVE EXHIBIT – NOT EVIDENCE

The Brown-Wecker Combination

Contrary to DoDots assertion, Brown and Wecker each describe using the Windows 95 operating system:

Brown

and associated code for accessing the data. The registry **208** operates as a database of information pertaining to one or more application programs that execute on the personal computer **20** (FIG. 1). The Windows **95** operating system provides a system registry that is employed by multiple application programs to store configuration information for subsequent retrieval. In one actual embodiment, the registry **208** is the system registry provided by Windows **95**. The composite desktop shell **206** adds, deletes and modifies registry **208** data pertaining to the composite desktop **204**.

SAMSUNG-1005, 6:23-32 (cited in Petition ('083 IPR), 15)

Wecker

Desktop computer **16** runs operating system **65** that is typically stored in non-volatile memory **54** and executes on the processor **48**. One suitable operating system is a Windows brand operating system sold by Microsoft Corporation, such as Windows 95 or Windows NT, operating systems, other derivative versions of Windows brand operating systems, or another suitable operating system. Other suitable operating systems include systems such as the Macintosh OS sold from Apple Corporation, and the OS/2 Presentation Manager sold by International Business Machines (IBM) of Armonk, N.Y. Application programs are

SAMSUNG-1006, 8:15-25 (cited in Petition ('083 IPR), 15)

Wecker's technique is used by Wecker's Windows 95 desktop computer

renders the data. Desktop computer **16**, through the transport, can periodically retrieve or receive new and updated script, data and CDF files either for further transmission to mobile device **18** or simply for rendering the data.

SAMSUNG-1006, 4:3-6 (cited in Reply ('083 IPR), 5)

Although not required, the invention will be described, at least in part, in the general context of computer-executable instructions, such as program modules, being executed by a personal computer **16** or mobile device **18**. Generally, pro-

SAMSUNG-1006, 6:48-51 (cited in Reply ('083 IPR), 5)

DEMONSTRATIVE EXHIBIT – NOT EVIDENCE

The Brown-Wecker Combination

DoDots exaggerates the complexity of the combination by erroneously alleging that the combination recites additional modifications, namely "us[ing] Wecker's more complex method [of script templates] with Brown's personal computers."

Greenspun Testimony
"But the Petition never alleged that Brown's HTML desktop components must be transformed into script templates, only that 'a user could download desktop components, and their associated HTML instructions, to their composite desktop,' **similar to Wecker's teachings of its script templates**. Petition, 13-19. Accordingly, the only required modification to Brown's HTML desktop components in view of Wecker is that these components would have been downloaded and stored. Petition, 13-19; SAMSUNG-1027, 91:4-6."

SAMSUNG-1026 ('083 IPR), ¶48 (cited in Reply ('083 IPR), 3-4)

Selker Testimony
Q. "Is HTML code capable of being stored in memory and then accessed later?" **A. "Absolutely. Yes."**

SAMSUNG-1027 ('083 IPR), 92:4-6 (cited in Reply ('083 IPR), 4)

Schmidt Testimony
"A POSITA also would have found it obvious that Brown's desktop components could be implemented as mobile channels, such that a user could **download desktop components, and their associated HTML instructions, to their composite desktop**." SAMSUNG-1005, 7:21-23; SAMSUNG-1006, 3:6-14

SAMSUNG-1003 ('083 IPR), ¶35 (cited in Petition ('083 IPR), 13)

DEMONSTRATIVE EXHIBIT – NOT EVIDENCE

Style templates, or style sheets, are terms of art known to be associated with HTML

DoDots argues "style templates" (or "style sheets") were not terms of art commonly used to describe HTML/XML templates."

Greenspun Testimony

"This is simply not true, as evidenced by the fact that (1) multiple corroborating references in the Petition used this phrase in the same way and (2) Dr. Selker, when questioned about the phrase 'style template,' readily confirmed its relationship to HTML. Petition, 20; SAMSUNG-1027, 57:22-58:35."

SAMSUNG-1026 ('083 IPR), ¶49 (cited in Reply ('083 IPR), 4)

Selker Testimony

Q. "Is HTML what then introduced, like, a style template? Is that an HTML-derived notion?

A. "Yeah. I mean HTML didn't start off with a style template, but the idea - all those other things didn't have, you know - I mean you could - sure."

SAMSUNG-1027 ('083 IPR), 58:22-59:3 (cited in Reply ('083 IPR), 4)

link to an external style sheet in a document; and the <SPAN> tag, which specifies the beginning and end of a styled piece of text.

The <STYLE> Element

The opening and closing <STYLE> tags indicate that a style sheet is being used to format the HTML document. Between the <STYLE> and </STYLE> tags, you can establish styles for use in an HTML document, including styles for elements, classes, IDs, and general styles.

The <STYLE> tag is just not particular to JavaScript style sheets; it is also used for cascading style sheets. When you use the <STYLE> tag to support a JavaScript style sheet, you need to specify the TYPE attribute as "text/javascript".

NOTE

The <STYLE> tag is always implemented within the HEAD element.

Listing 21.1 shows an example of how to implement the <STYLE> tag in an HTML document.

Listing 21.1. The <STYLE> tag in action.

```
<HTML>
<HEAD>
<STYLE TYPE= "text/javascript">
tags.BODY.marginRight=10
tags.BODY.marginLeft=10
CorpHD.align="center"
CorpBD.align="left"
</STYLE>
</HEAD>
```

The <LINK> Element

The <LINK> element links to an external style sheet to format the HTML document. Listing 21.2 shows an example of how to implement the <LINK> element.

Listing 21.2. The <LINK> tag in action.

```
<HTML>
<HEAD>
<TITLE>The <LINK> Tag in Action</TITLE>
<LINK REL=STYLESHEET TYPE= "text/JavaScript"
HREF= "http://samplesite.com/exstyles" TITLE= "example"
</HEAD>
```

SAMSUNG-1011 ('083 IPR), 222 (annotated, cited in Reply ('083 IPR), 4)

DEMONSTRATIVE EXHIBIT – NOT EVIDENCE

The combination does not rely on a particular operating system (OS)

Greenspun Testimony

"[A] POSITA would naturally implement the combination **in the most recent version of any operating system available as of the critical date** (e.g., Windows 98 for Microsoft's consumer edition of Windows), making DoDots' arguments against a particular OS moot. Indeed, the petition never alleges that a particular OS is required to implement the combination. Petition, 13-19."

SAMSUNG-1026 ('083 IPR), ¶50 (cited in Reply ('083 IPR), 4–5)

Greenspun Testimony

"Second, as described in the Petition and Dr. Schmidt's testimony, '**both Brown and Wecker describe the Windows 95 operating system as a suitable operating system that can implement their techniques**,' and Wecker further discloses that a "user typically runs the same types of applications on both the desktop computer and on the mobile device." Petition, 15; SAMSUNG-1005, 6:26-32; SAMSUNG-1006, 1:39-44, 8:15-21. **Because Wecker uses its techniques for a desktop computer, DoDots arguments that a POSITA would not have considered Wecker for non-mobile implementations falls flat**. Petition, 13-14; SAMSUNG-1006, 3:58-4:13, 6:45-7:26."

SAMSUNG-1026 ('083 IPR), ¶50 (cited in Reply ('083 IPR), 4–5)

Desktop computer **16** runs operating system **65** that is typically stored in non-volatile memory **54** and executes on the processor **48**. One suitable operating system is a Windows brand operating system sold by Microsoft Corporation, such as Windows 95 or Windows NT, operating systems, other derivative versions of Windows brand operating systems, or another suitable operating system.

SAMSUNG-1006, 8:15-21 (cited in Petition ('083 IPR), 15)

conjunction with a desktop computer. For example, the user of the mobile device may also have access to, and use, a desktop computer at work or at home, or both. The user typically runs the same types of applications on both the desktop computer and on the mobile device. Thus, it is quite

SAMSUNG-1006, 1:39-44 (cited in Petition ('083 IPR), 15)

DEMONSTRATIVE EXHIBIT – NOT EVIDENCE

Features Alleged to be Lacking in Brown and Brown-Wecker

FISH.

DEMONSTRATIVE EXHIBIT – NOT EVIDENCE

Table of Contents for Brown and Brown-Wecker

Brown/Brown-Wecker renders obvious “control characteristics” (all IPRs)	30
Brown’s HTML instructions are “data structures” (all IPRs)	41
Brown/Brown-Wecker renders obvious a “fully configurable frame” (all IPRs)	46
Brown/Brown-Wecker renders obvious a “content reference/element” (’083 and ’545 IPRs)	51
Brown/Brown-Wecker renders obvious “instructions configured to cause the first/second NIM to request content” (’083 IPR)	57
Brown/Brown-Wecker renders obvious “one or more processors configured to access or execute the [first and [second] NIM template” (’083 IPR)	62
Brown-Wecker renders obvious “transmitting a request to the server over the network, the request requesting networked information monitor template” (’545 IPR)	66
Brown/Brown-Wecker renders claims 4, 5, 6, 7, 14, and 15 obvious (’083 IPR)	70
Brown-Wecker renders claims 1-4, 7-16, and 19-24 obvious (’407 IPR)	76

DEMONSTRATIVE EXHIBIT – NOT EVIDENCE

Brown/Brown-Wecker renders obvious “control characteristics” (all IPRs)

DEMONSTRATIVE EXHIBIT – NOT EVIDENCE

"Control characteristics"

"Control characteristics" are recited in the NIM Template construction.

"a data structure that defines the characteristics of a NIM, including the NIM frame, view, and **control characteristics**, and that excludes executable applications/compiled code."

Petition ('083 IPR), 4-5 (citing SAMSUNG-1001 ('083 IPR) 7:19-23)

DEMONSTRATIVE EXHIBIT – NOT EVIDENCE

Brown's resizing control characteristics

Resizing controls are "control characteristics" as this is consistent with the Challenged Patents.

Brown's "resizable" control characteristic

6. <IMG id=3 name="DeskMovr" src="http://www.microsoft.com/ie/images/ulg/ulg_ie40.jpg"
7. resizeable="XY"
8. subscribed_url="http://www.microsoft.com/ie/images/ulg/ulg_ie40.jpg"
9. style="BACKGROUND: transparent; position:absolute; LEFT: 347; TOP: 236; WIDTH: 120; HEIGHT: 82; Z-INDEX: 1006">
10. <IFRAME id=7 MARGINWIDTH=0 MARGINHEIGHT=0 name="DeskMovrW" src="http://www.uspto.gov/"
11. resizeable="XY"
12. subscribed_url="http://www.uspto.gov/"
13. frameborder=0 style="BACKGROUND: transparent; position:absolute; LEFT:620; TOP:254; WIDTH:156; HEIGHT:150; Z-INDEX:1014"></IFRAME>
14. <IFRAME id=8 MARGINWIDTH=0 MARGINHEIGHT=0 name="DeskMovrW" src="http://www.microsoft.com/ie/ie40/gallery/ticker.htm"
15. resizeable="XY"
16. subscribed_url="http://www.microsoft.com/ie/ie40/gallery/cdf/g_stock.cdf"
17. frameborder=0 style="BACKGROUND: transparent; position:absolute; LEFT:178; TOP:26; WIDTH:516; HEIGHT:57; Z-INDEX:1016"></IFRAME>

Control characteristics

Brown's HTML instructions that define desktop components

A frame which displays a view

SAMSUNG-1005, 11:56-67, 12:1-10 (annotated)

SAMSUNG-1005, 11:56-67, 12:1-10 (annotated, cited in Petition ('083 IPR), 29)

'083 Patent's description of resize controls

further herein. The Dot Definition may contain base control (close, resize) overrides such that the controls are not rendered or are rendered only upon mouse over events rather than persistent display. Additional media elements and network referenced media may also be contained within the Dot Definition.

SAMSUNG-1001 ('083 IPR) 10:1-6 (cited in Reply ('083 IPR), 7)

Structurally, the Dot or media application package comprises initialization data, control calls, and a frame. Content, such as that obtained from a network reference, is rendered within the frame. The control calls may include the web conduit, base controls such as "close" and resize", base GUI elements such as a title bar, Dot menu, and Dot bottom bar, as well as XML Dot calls that are made by the Dot Definition and executed by the Home Dot. Unlike a downloadable, cus-

SAMSUNG-1001 ('083 IPR) 8:46-53 (cited Reply ('083 IPR), 7)

DEMONSTRATIVE EXHIBIT – NOT EVIDENCE

Brown's resizing control characteristics

DoDots attempts to support its flawed argument that resizing controls are not "control characteristics" by referring to a different DoDots patent (DODOTS-2015, 36:12-15, FIG. 28B), while ignoring conflicting disclosure within the challenged patents.

Greenspun Testimony
"Although this patent supports the idea that 'resizable' is an example 'frame characteristic,' **it does not state that 'resizable' cannot also be a 'control characteristic'** of a NIM, for example, changing the size of the control area by resizing the NIM. DODOTS-2015, 36:12-15, FIG. 28B."

SAMSUNG-1026 ('083 IPR), ¶55 (cited in Reply ('083 IPR), 7)

<u>The additional patent cited by DoDots also does not redefine "control characteristics" or state that a "characteristic" cannot be both a frame and control characteristic</u>

The ’083 Patent broadly describes “control characteristics”

A POSITA would have understood that “control characteristics” would include any data in the NIM template that dictate the existence, nature, functionality, or appearance of a control.

Greenspun Testimony
“The construction of ‘NIM template’ does not limit the feature of a ‘control’ with its use of the word ‘characteristic’ – it broadens it by **simply requiring definition of ‘control characteristics’ of the NIM**.”

SAMSUNG-1026 (’083 IPR), ¶54 (cited in Reply (’083 IPR), 5-6)

age. Application Media Package templates database **74** includes a large number of Application Media Package templates. Each Application Media Package template defines the characteristics of a specific Application Media Package, including fully configurable frame characteristics, viewer and control characteristics, and Application Media Package content references.

SAMSUNG-1001 (’083 IPR) 7:17-23 (cited in Petition (’083 IPR), 4)

With the general architecture of a system within which the present invention may operate provided with reference to FIG. **1**, we next turn to a number of definitions of key terms used herein. Terms not specifically defined herein shall be understood to have their broadest, generally accepted meaning. Other terms may be defined elsewhere in the present disclosure. (See also Appendix A and B herein.)

SAMSUNG-1001 (’083 IPR) 8:16-22 (cited in Reply (’083 IPR), 6)

<u>The Challenged Patents do not redefine “control characteristics”</u>

Brown's Active-X controls align with embodiments in the '083 Patent

The Challenged Patents describe an almost identical example of an Active-X based control that is described in Brown:

Brown depicts a "Microsoft Investor" component with embedded controls

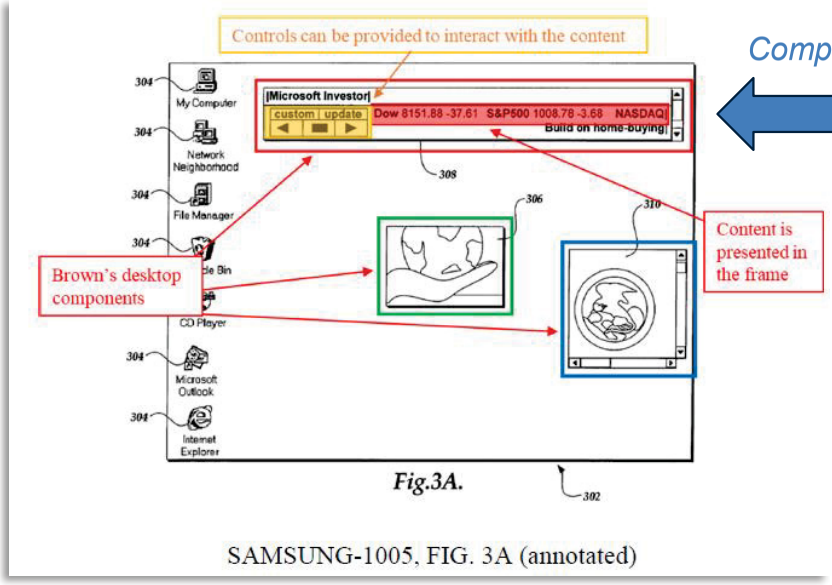

SAMSUNG-1005, FIG. 3A; (annotated, cited in Petition ('083 IPR), 25)

Compare

'083 Patent's example of a "stock ticker display"

The Web Conduit control is just one of many controls that may be included and positioned in a Dot's control space **126**. For example, Active-X based control can also be referenced and inserted. This capability allows a Dot developer to implement a custom control. For example, a stock ticker display may be implemented as a custom secure chart control that renders stock tracking charts with small streams of secure

SAMSUNG-1001 ('083 IPR) 16:61-67 (cited in Reply ('083 IPR), 7)

The "minimum" control in the challenged patents simply renders data

Controls—A Dot comprises of at least one control, each of which is arranged within the frame according to the Dot Definition. In the preferred embodiment, this minimum control is the Web Conduit which is the Internet data rendering portion of the frame. Controls are calls that are contained

SAMSUNG-1001 ('083 IPR) 9:61-67 (cited in Reply ('083 IPR) 7-8)

DEMONSTRATIVE EXHIBIT – NOT EVIDENCE

Brown's other "control characteristics" – Scroll Bars

Brown includes other examples of "control characteristics," such as scroll bars:

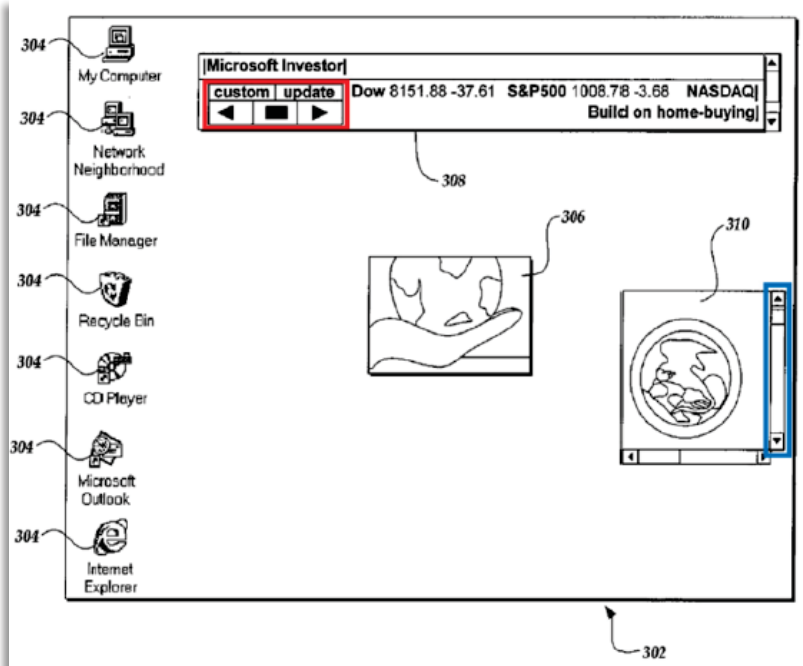

SAMSUNG-1005, FIG. 3A (annotated)

SAMSUNG-1005, FIG. 3A; (annotated, cited in Petition ('083 IPR), 43)

```
typedef struct_tagCOMPONENT
        {
         DWORD dwSize;       //Size of this structure
         DWORD dwID;         //Reserved: Set it always to zero.
         int iComponentType; //One of COMP_TYPB_*
         BOOL fChecked;      // Is this component enabled?
         BOOL fDirty;        // Had the component been modified and
        not yet saved to disk?
         BOOL fNoScroll;     // Is the component scrollable?
         COMPPOS cpPos;      // Width, height etc.,
         WCHAR wszFriendlyName[MAX_PATH];     // Friendly
        name of component.
        WCHAR wszSource[INTERNET_MAX_URL_
        LENGTH]; //URL of the component.
        WCHAR wszSubscribedURL[INTERNET_MAX_URL_
        LENGTH]; //Subscribed URL
        }
```

Scroll bars can be implemented for desktop components.

SAMSUNG-1005, 9:13-27 (annotated)

SAMSUNG-1005, 9:13-27; (annotated, cited in Petition ('083 IPR), 43)

DEMONSTRATIVE EXHIBIT – NOT EVIDENCE

Brown's other "control characteristics" – Scroll Bars

Like Brown, the '083 Patent defines its control characteristics based on frame size:

A NIM's "title bar" control is rendered based on the frame size

The title bar **132** may contain a reference title for the Dot and may provide for a place for a user to grab and drag the Dot in a windowed environment. It may be implemented as a GIF rendering control that can be targeted to a local/remote title bar **132** image (an embodiment supports four title bar images—normal, mouse-down, mouse-over or hover, inactive). In this embodiment, the title bar **132** has a fixed height and width that is a function of the frame's width. The Dot Definition allows the title bar **132** image to be justified left, right, or center and for specified number of repeat-pixels, the title bar image may be tiled the full width of the Dot. Overlay text can also be specified to layer on top of the title bar **132** image.

SAMSUNG-1001 ('083 IPR) 15:50-62 (cited in Reply ('083 IPR) 8-9)

Greenspun Testimony

"Whether these controls are present and the size of the scroll element **are defined by the frame size specified in Brown's HTML instructions**. … Because characteristics of Brown's scroll bars are functions of a frame's width and height, Brown's definition of the frame size in its HTML instructions **defines control characteristics in a manner similar to how the '083 patent defines characteristics of its title bar control.**"

SAMSUNG-1026 ('083 IPR), ¶57 (cited in Reply ('083 IPR), 7-8)

DEMONSTRATIVE EXHIBIT – NOT EVIDENCE

Brown's other "control characteristics" – Control Calls

Externally defined controls are within the scope of the challenged patents description of controls, which explicitly includes such externally defined controls:

Patent Owner Response
"Second, a POSITA would not recognize or find obvious that the alleged NIM templates would define control characteristics because the actual controls for resizing/moving the alleged NIMs are defined outside of the HMTL for the alleged NIM templates."

Patent Owner Response ('083 IPR), 27

Greenspun Testimony
"Additionally, the '083 patent makes clear that NIM templates can include 'control calls' (the invoking of control functionality defined outside of the template)." SAMSUNG-1001, 8:46-53, 9:15-19, 13:49-53, 13:57-59, 20:38-40."

SAMSUNG-1026 ('083 IPR), ¶54 (cited in Reply ('083 IPR), 5-6)

DEMONSTRATIVE EXHIBIT – NOT EVIDENCE

Brown's other "control characteristics" – Control Calls

Externally defined controls are within the scope of the challenged patents description of controls, which explicitly includes such externally defined controls:

Greenspun Testimony
"Darnell describes the process of calling a control with respect to Active-X, an example used in the '083 Patent. SAMSUNG-1011, 151 (describing that Active-X controls can be called using the HTML '<OBJECT>' tag), 324."

SAMSUNG-1026 ('083 IPR), ¶54 (cited in Reply ('083 IPR), 5-6)

What Is an ActiveX Control?

An ActiveX control is a program, or an executable file that exposes certain methods, properties, and events through a programmable interface. ActiveX controls have been around for quite a while, but have only recently been referred to as ActiveX controls. They adhere to the component object model (COM) standard; this standard has been amended recently to allow slimmer controls to be created for ease of download across the Internet.

An ActiveX control is built in such a way that other programs that are also built to the COM interface standard can interface with it. In this way, VBScript can read and set its properties, handle its events, and call its methods.

SAMSUNG-1011, 324 (cited in SAMSUNG-1026 ('083 IPR), ¶54)

ActiveX is a separate executable file with an interface that allows another file to "call its methods"

DEMONSTRATIVE EXHIBIT – NOT EVIDENCE

Brown's other "control characteristics" – Control Calls

Externally defined controls are within the scope of the challenged patents description of controls, which explicitly includes such externally defined controls:

Structurally, the Dot or media application package comprises initialization data, control calls, and a frame. Content, such as that obtained from a network reference, is rendered within the frame. The control calls may include the web conduit, base controls such as "close" and resize", base GUI elements such as a title bar, Dot menu, and Dot bottom bar, as well as XML. Dot calls that are made by the Dot Definition and executed by the Home Dot. Unlike a downloadable, cus-

SAMSUNG-1001 ('083 IPR) 8:46-53 (cited in Reply ('083 IPR), 6)

"Control calls" are executed outside of the NIM template

xml data. Such a custom control can be laid out with a Web Conduit control next to it if the Dot developer chooses to do so. Also, just like a browser, a Dot developer may embed an active-x control in an HTML page rendered in the Web Conduit control as is the practice for use with full screen browsers.

SAMSUNG-1001 ('083 IPR) 17:1-5 (cited in Reply ('083 IPR), 7)

"Embedded" controls reference control definitions outside of the NIM template

DEMONSTRATIVE EXHIBIT – NOT EVIDENCE

Brown's HTML instructions are "data structures" (all IPRs)

FISH.

DEMONSTRATIVE EXHIBIT – NOT EVIDENCE

"Data structure"

A "data structure" is recited in the NIM Template construction.

"a **data structure** that defines the characteristics of a NIM, including the NIM frame, view, and control characteristics, and that excludes executable applications/compiled code."

Petition ('083 IPR), 4-5 (citing SAMSUNG-1001 ('083 IPR) 7:19-23)

DEMONSTRATIVE EXHIBIT – NOT EVIDENCE

Brown's HTML instructions are "data structures"

The '083 Patent describes "dHTML" – Dynamic HTML – as an example language that can define a NIM template (and thus <u>be a "data structure"</u>) and DoDots' Product Evidence Uses "HTML"

Greenspun Testimony
"This position [that HTML is not a data structure] is **impossible to reconcile with the '083 patent, which recites 'dHTML' ('dynamic' HTML) as an example language that can define a NIM template**. SAMSUNG-1001, 8:36-45. … Moreover, the Patent Owner's **own exhibits corroborate that HTML is an acceptable language** in which a NIM template can be defined. DODOTS-2025, 2; DODOTS-2033, 42."

SAMSUNG-1026 ('083 IPR), ¶58 (cited in Reply ('083 IPR), 9)

In one embodiment, Dots are programmed with browser readable language that is parsed to the Microsoft Internet Explorer (IE) rendering object (referenced within a control, so named the Dot Web Conduit) and are capable of displaying any Internet content supported by IE 4 (however, not necessarily requiring use of Internet Explorer or any browser for such display). This browser readable language defines the appearance of a Dot, its functionality, and what content is presents. This browser readable language includes XML, streaming media, dHTML, etc.

SAMSUNG-1001 ('083 IPR), 8:36-45 (cited in Reply ('083 IPR), 9)

George and John Kembel, twin brothers and graduates of the same Stanford University product design program, founded Sunnyvale start-up DoDots Inc. to give Web sites better packaging.

In their analogy, surfing the Web is like trolling the supermarket aisles for lettuce, croutons and dressing. They aim to combine everything into a single bag of mixed salad.

The dot icons they offer are like those bags, serving up bite-size applications written with the widely used HTML code. Companies use the dots to package their content and services, and then send them out to users as miniature versions of their Web pages.

DODOTS-2025, 2 (annotated).

Ex-2025, 2 (cited in Reply ('083 IPR), 10)

DEMONSTRATIVE EXHIBIT – NOT EVIDENCE

Brown's HTML instructions are "data structures"

A POSITA would have considered HTML to be a "data structure"

Greenspun Testimony

"This position is also impossible to reconcile with the practicalities of a client server system, such as a Web-based system. **Structured data must be transmitted from one computer to another, e.g., from the server to a client**. For this to happen over an Internet connection, the data structure must be serialized into a computer readable format. **HTML and XML are popular examples of such formats**. … In particular, a POSITA would understand that "data structure" is a genus term that encompasses many different types of data formats, **to include the HTML Document Object Model (DOM) – a hierarchical structure**."

SAMSUNG-1026 ('083 IPR), ¶¶58, 60 (cited in Reply ('083 IPR), 9-10)

5. Document Structure

An HTML document is a tree of elements, including a head and body, headings, paragraphs, lists, etc. Form elements are discussed in 8, "Forms".

Berners-Lee & Connolly Standards Track [Page 20]

SAMSUNG-1040 ('083 IPR), 20 (cited in Reply ('083 IPR), 10)

Greenspun Testimony

"[T]he 1995 HTML standard document explains that 'An HTML document is a tree of elements'; **a POSITA would recognize that a tree is a fundamental data structure in computer science**."

SAMSUNG-1026 ('083 IPR), ¶60 (cited in Reply ('083 IPR), 10)

DEMONSTRATIVE EXHIBIT – NOT EVIDENCE

Microsoft considered HTML to be a "data structure"

Greenspun Testimony

"**Microsoft also describes the DOM as a structure in other publications**, for example, *Inside Dynamic HTML* (referenced in Brown) which dedicates five chapters to HTML document "structure" SAMSUNG-1032, 3, 82-92."

SAMSUNG-1026 ('083 IPR), ¶60 (cited in Reply ('083 IPR), 10)

CHAPTER FOUR
The Browser Window **89**
The *window* Object 90
The Window Environment 92
Window Events 97
Timer Events 102
The *clientInformation* or *navigator* Property 108

CHAPTER FIVE
Window and Frame Management **113**
Manipulating the Window 114
Creating New Windows 116
Manipulating Framesets 130
Special Event Considerations 144

PART II: DOCUMENT STRUCTURE

CHAPTER SIX
The HTML Document **149**
Referencing the *document* Object 151
Changing the Document's Colors 151
Accessing Meta Information About the Document 155
Modifying the HTML Stream 164

CHAPTER SEVEN
Document Element Collections **167**
Using the Collections 168
The HTML Structure and Collections 177

CHAPTER EIGHT
Scripts and Elements **189**
Identifying Elements 190
Accessing an Element's Attributes 192
Parsing Information 196
Creating New Elements 200
Customizing Elements 201

CHAPTER NINE
Scripting Individual Elements **207**
Programming the Body and Frameset Elements 208
Programming the Anchor Element 216
Programming the Link Element 222
Programming the IMG and Map Elements 226
Programming the Marquee Element 237
Programming the Object Element 239
Programming the Table Element 240

CHAPTER TEN
Forms and Intrinsic Controls **251**
HTML Forms 252
Programming Text Input Elements 262
Programming List Elements 270
Programming Lists Using Radio Buttons and Check Boxes 277
Programming Command Button Elements 280
Programming Label and Fieldset Elements 283

PART III: DOCUMENT STYLE AND ANIMATION

CHAPTER ELEVEN
Dynamic Styles **287**
Dynamic Styles and CSS 288
Style Sheet Properties 289
Inline Styles 291
Changing the *class* Attribute 292
Global Style Sheets 295
Adaptive Layout Techniques 311
Data Display Techniques 316
Text Animation Techniques 325

CHAPTER TWELVE
Dynamic Positioning **329**
CSS Positioning 330
Scripting CSS Positioning 339
The Rendering Context 356

SAMSUNG-1032 ('083 IPR), 3 (cited in Reply ('083 IPR), 10)

DEMONSTRATIVE EXHIBIT – NOT EVIDENCE

45

Brown/Brown-Wecker renders obvious a “fully configurable frame” (all IPRs)

DEMONSTRATIVE EXHIBIT – NOT EVIDENCE

“Fully configurable frame”

A “fully configurable frame” is recited in the NIM construction.

“a **fully configurable frame**, with one or more controls, through which content is presented to the user.”

Petition (’083 IPR), 3-4 (citing SAMSUNG-1001 (’083 IPR) 5:41-44)

DEMONSTRATIVE EXHIBIT – NOT EVIDENCE

"Fully configurable frame"

The Challenged Patents do not require frames, controls, and content to be defined by a "developer"

Greenspun Testimony

"The Patent Owner alleges that none of the desktop components of Brown include "a fully configurable frame" because the "frame shape and content [cannot] be wholly defined by the Dot developer." … In support of this argument, Patent Owner cites to several areas of the '083 patent, **none of which specify that a NIM frame must include a configurable control defined by a 'developer.'** SAMSUNG-1001, 10:55-57, 11:11-15, 65-67; 12:20-45; 16:61-65."

SAMSUNG-1026 ('083 IPR), ¶¶61-62 (cited in Reply ('083 IPR), 11)

'083 Patent

the frame such as an image, Internet content, etc. Additionally the frame shape and content may be wholly defined by the Dot developer.

SAMSUNG-1001 ('083 IPR) 10:55-57

borders of a browser window. Unlike a web page in a third party browser, a Dot's graphical user interface may be wholly defined and/or branded by the developer.

SAMSUNG-1001 ('083 IPR) 11:65-67

new web page content. As previously described, the branded experience may be wholly defined by the Dot developer, thus removing the rendering and branding limitations of a web page in a browser. Without the present invention, an alterna-

SAMSUNG-1001 ('083 IPR) 12:42-45

The Web Conduit control is just one of many controls that may be included and positioned in a Dot's control space **126**. For example, Active-X based control can also be referenced and inserted. This capability allows a Dot developer to implement a custom control. For example, a stock ticker display

SAMSUNG-1001 ('083 IPR) 16:61-65

DEMONSTRATIVE EXHIBIT – NOT EVIDENCE

"Fully configurable frame"

The Challenged Patents do not require frames, controls, and content to be defined by a "developer"

Greenspun Testimony
"In fact, the Patent Owner's exhibits provide numerous examples of NIMs that **do not include a configurable control added by a developer**."

SAMSUNG-1026 ('083 IPR), ¶62(cited in Reply ('083 IPR), 11-12)

<MENU>

Contains zero or more <ITEM> tags.

<ITEM>

TITLE= "string"

TOOLTIP="string"

ICON="URL"

ID=" string"

Must be unique.

<ACTION>

RECIPIENT="address"

MESSAGE="string"

<CONTROL_LAYOUT>

Contains zero or more <CONTROL> tags.

WIDTH= "integer"

Divides control space into this many evenly spaced columns. Default is 1.

SAMSUNG-1001, Appendix A, 3.

SAMSUNG-1001, Appendix A (cited in Reply ('083 IPR), 12)

DoDots Technical Overview

THE DOT™ DEFINES THE PACKAGE FOR CONTENT AND APPLICATIONS

Dots™ are packaged pieces of branded Internet content and applications. The Dot descriptions are constructed of three primary elements: the Topbar, the Bottombar, and the Web Control. Groups of Dots, called DotPacks™, can work together, using Dot messaging, to give users a full application experience. Through the DevDot™ and Dot messaging, developers have access to all the elements of Dots and DotPacks, and can create branded, smart packages targeted to specific customers.

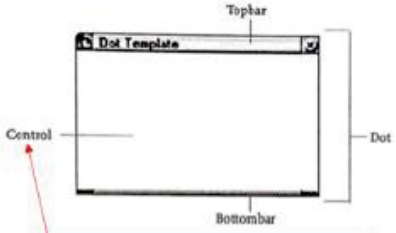

The "web control" is the only control present

DODOTS-2021, 15, citing DODOTS-2028, Technical Overview at 1.

Ex-2021, 15 (cited in Reply ('083 IPR), 12)

DEMONSTRATIVE EXHIBIT – NOT EVIDENCE

"Fully configurable frame"

The Challenged Patents merely require the frame to be fully configurable

Greenspun Testimony
"As explained in the Petition, Brown places no restriction on the frames of its desktop components and, thus, Brown discloses fully configurable frames. Petition, 23-25. And, as discussed above, Brown's frames have one or more controls. Petition, 25-29, 42-46; *see above*, §VI.A. **Moreover, Brown does not place any restrictions on the HTML included in its desktop components and, without restrictions, a POSITA would have understood or found obvious that standard controls defined by HTML are available for addition in Brown's desktop components.** SAMSUNG-1005, 7:9-47; 8:10-16; 10:9-15; 12:44-13:21."

SAMSUNG-1026 ('083 IPR), ¶63 (cited in Reply ('083 IPR), 13)

The frames of Brown's desktop components can be repositioned and resized

The composite desktop **302** includes one or more desktop components. A desktop component is a distinct geometric region that displays a single piece of Web-based content. Desktop components can be positioned at any location on a composite desktop, and can be resized if desired. Desktop components can be layered on top of other desktop components. The exemplary desktop **302** depicted in FIG. **3A**

SAMSUNG-1005, 7:21-26 (cited in Reply ('083 IPR), 13)

Lines 14–17 comprise HTML instructions that describe the active desktop component **308** (FIG. **3A**). Preferably, active desktop components are implemented as floating frames. Floating frames are rectangular regions that can be positioned anywhere on a screen. Floating frames are designated by the "IFRAME" tag. Floating frames are well known in the art of the Web page construction, and are not

SAMSUNG-1005, 12:61-67 (cited in Reply ('083 IPR), 13)

DEMONSTRATIVE EXHIBIT – NOT EVIDENCE

Brown/Brown-Wecker renders obvious a “content reference/element” (’083 and ’545 IPRs)

DEMONSTRATIVE EXHIBIT – NOT EVIDENCE

"Content reference/element"

A "content reference" or "content element" is recited in claim 1 of the challenged patents.

(1) a content reference that comprises a network location at which content for the first networked information monitor is accessible via a TCP/IP protocol;

SAMSUNG-1001 ('083 IPR), claim 1 (cropped)

a definition of a first content element for the networked information monitor template, the definition of the first content element referencing a first network location from which the first content element for the networked information monitor template is served over the network;

SAMSUNG-1001 ('545 IPR), claim 1 (cropped)

DEMONSTRATIVE EXHIBIT – NOT EVIDENCE

The Challenged Patents admit that XML is "internet content," and therefore, XML is a "content reference"

Greenspun Testimony

"**The '083 patent admits that XML is 'internet content,'** and Dr. Selker's testimony confirms the same. SAMSUNG-1001, 11:1-4, 14:29-37, 21:18-20; SAMSUNG-1027, 107:19-25. Moreover, the Patent Owner's own exhibits corroborate that XML was understood to be internet 'content.'" DODOTS-2033, 12."

SAMSUNG-1026 ('083 IPR), ¶65 (cited in Reply ('083 IPR), 13)

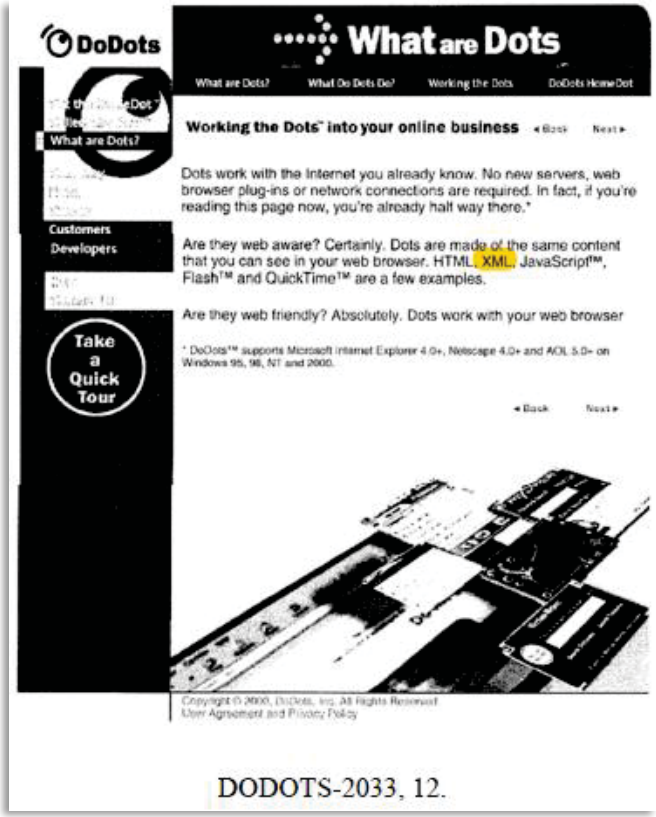

Ex-2033 ('083 IPR), 12 (cited in Reply ('083 IPR), 14)

Web Browser Readable Language—standard Internet content that is capable of being parsed by a browser, such content including HTML, Java script, XML, CSS, streaming media, Flash, HTTPS, cookies, etc.

SAMSUNG-1001 ('083 IPR) 11:1-5 (cited in Reply ('083 IPR), 13)

Selker Testimony

Q. "How about XML? Is XML a format that internet content comprises?"

A. "Yes."

SAMSUNG-1027 108:23-25 (cited in Reply ('083 IPR), 13)

DEMONSTRATIVE EXHIBIT – NOT EVIDENCE

Microsoft's CDF is Based on XML

Greenspun Testimony

"Microsoft's CDF is based on XML, as corroborated by Wecker (another Microsoft reference describing the use of CDF). SAMSUNG-1006, 10:57-60 … **The POR does not explain why XML, in the context of Brown's CDF, is not internet content.** … The Patent Owner's assertation that CDF files themselves cannot be internet content is at odds with the '083 patent itself."

SAMSUNG-1026 ('083 IPR), ¶66 (cited in Reply ('083 IPR), 14)

Wecker

CDF is a standard for creating "channels" for use with browsers such as Internet Explorer 4.0. The CDF standard is based on the Extensible Markup Language (XML). One

SAMSUNG-1006 10:57-60 (cited in Reply ('083 IPR), 14-15)

Brown

```
14. <IFRAME id=8 MARGINWIDTH=0
    MARGINHEIGHT=0 name="DeskMovrW" src=
    "http://www.microsoft.com/ie/ie40/gallery/ticker.htm"
15. resizeable="XY"
16. subscribed_url="http://www.microsoft.com/ie/ie40/
    gallery/cdf/g_stock.cdf"
17. frameborder=0 style="BACKGROUND: transparent;
    position:absolute; LEFT:178; TOP:26; WIDTH:516;
    HEIGHT:57; Z-INDEX:1016"></IFRAM
```

A URL corresponding to a CDF file.

SAMSUNG-1005, 12:1-8 (annotated)

SAMSUNG-1005 12:1-8 (cited in Petition ('083 IPR), 33)

DEMONSTRATIVE EXHIBIT – NOT EVIDENCE

DoDots' Expert has no experience with CDF, despite declaring that CDF is not internet content

Dr. Selker was unaware that CDF was based on XML when declaring CDF to not be internet content.

Selker Testimony
Q. "Before your work on this case, had you encountered CDF files before?" **A. "I didn't - no. I had not specifically used them."** Q. "Can CDF files be written using XML?" **A. "… I don't know. … I don't see why they would be written in XML, by the way, but that's just a hypothetical. …"**

SAMSUNG-1027 112:13-23 (cited in Reply ('083 IPR), 15)

Selker Testimony
Q. "How about XML? Is XML a format that internet content comprises?" **A. "Yes."**

SAMSUNG-1027 108:23-25 (cited in Reply ('083 IPR), 13)

DoDots ignores other examples of Brown's content references

Greenspun Testimony

"Although Brown's CDF subscription was relied upon in the Petition as an illustrative example, the Petition clearly articulates that: (1) according to Dr. Schmidt, 'a POSITA would have understood that a Uniform Resource Locator ('URL') [is a] 'network location,'' and that content is available at these network locations, and (2) Brown depicts multiple desktop components, **each with its own content reference**."

SAMSUNG-1026 ('083 IPR), ¶68 (cited in Reply ('083 IPR), 15-16)

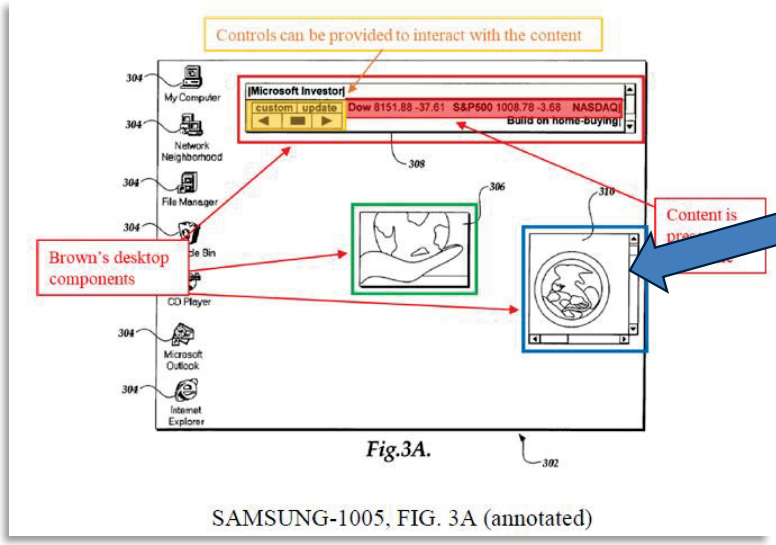

SAMSUNG-1005, FIG. 3A; (annotated, cited in Petition ('083 IPR), 25)

```
10. <IFRAME id=7 MARGINWIDTH=0
    MARGINHEIGHT=0 name="DeskMovrW" src=
    "http://www.uspto.gov/"
11. resizeable="XY"
12. subscribed_url="http://www.uspto.gov/"
13. frameborder=0 style="BACKGROUND: transparent;
    position:absolute; LEFT:620; TOP:254; WIDTH:156;
    HEIGHT:150; Z-INDEX:1014"></IFRAME>
```

SAMSUNG-1005, 11:56-67, 12:1-10 (annotated, cited in Petition ('083 IPR), 29)

Schmidt Testimony

To identify the location of a webpage or resource on the internet a unique identifier known as a "Uniform Resource Identifier" or "URI" is used. … One of the most common forms of URI is the "Uniform Resource Locator," or "URL." … URLs are used, among other things, **to locate webpages or content on the Internet** using HTTP and TCP/IP.

SAMSUNG-1003 ('083 IPR), ¶23 (cited in Petition ('083 IPR), 33)

Brown/Brown-Wecker renders obvious “instructions configured to cause the first/second NIM to request content” (’083 IPR)

FISH.

DEMONSTRATIVE EXHIBIT – NOT EVIDENCE

"Instructions configured to…"

"Instructions configured to…" is recited in claim 1 of the '083 patent. Claim 4 requires "instructions configured [] to cause the second networked information monitor to request content from the network location."

(3) instructions configured (i) to cause the first networked information monitor to request content from the network location in the content reference via the TCP/IP protocol, and (ii) to cause the first networked information monitor to generate the graphical user interface of the first networked information monitor with the content received from the network location via the TCP/IP protocol within the frame;

SAMSUNG-1001 ('083 IPR), claim 1 (cropped)

(3) instructions configured (i) to cause the second networked information monitor to request content from the second network location in the second content reference via the TCP/IP protocol, and (ii) to cause the second networked information monitor to generate the graphical user interface of the second networked information monitor with the content received from the second network location via the TCP/IP protocol within the frame.

SAMSUNG-1001 ('083 IPR), claim 4 (cropped)

DEMONSTRATIVE EXHIBIT – NOT EVIDENCE

DoDots' allegation that each NIM is completely independent is incorrect

DoDots alleges that "each NIM must be able to request content without requiring any other NIM to also do so." POR, 43-45

Greenspun Testimony

"Although the Patent Owner cites to various areas of the '083 patent, **they neglect to mention the 'Application Media Viewer' (or "Home Dot")** which is 'an installed client application which renders the [NIMs] as well as provides additional functionality to the user experience."

SAMSUNG-1026 ('083 IPR), ¶70 (cited in Reply ('083 IPR), 17-18)

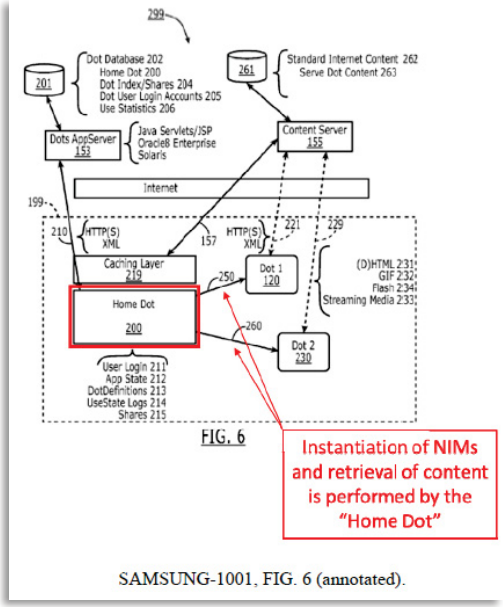

SAMSUNG-1001, FIG. 6 (annotated).

SAMSUNG-1001 ('083 Patent), FIG. 6 (cited in Reply ('083 IPR), 18)

'083 Patent

Data contained within an Application Media Package (Dot) is parsed by the Home Dot. Control calls contained within the Dot are also parsed and executed. The Home Dot may then instantiate a Dot without relying on functionality provided by a browser. In fact, in a preferred embodiment, a browser is not employed to instantiate or operate an Application Media Package.

SAMSUNG-1001 ('083 Patent), 20:38-44 (cited in Reply ('083 IPR), 18)

The content server **155** is communicatively connected to a physical memory device **261** which holds the Internet content **262** as well as other forms of data **263**. Content/data **262**, **263** is communicated to the instantiated Dots **120**, **230** where it is rendered on the client computer **199**. In general, content passes first through the Home Dot application **200** or a similar client computer **199** program that is capable of receiving and parsing Internet content. Therefore, the connections between content server **155** and Dots **120**, **230** are shown as dashed lines, indicating that for this figure the connection is indirect.

SAMSUNG-1001 ('083 Patent), 21:33-42 (cited in Reply ('083 IPR), 18)

Each of Brown's desktop components is separate and distinct

Greenspun Testimony

"Brown's composite desktop is composed of **a plurality** of 'HTML instructions,' each set of instructions defining its own separate and unique "desktop component," and each component is visually distinct from all other components. Petition 23-29. … This level of separation satisfies the limitation, **which simply requires 'instructions' for a 'first networked information monitor**.'" Petition, 37-38."

SAMSUNG-1026 ('083 IPR), ¶70 (cited in Reply ('083 IPR), 17-18)

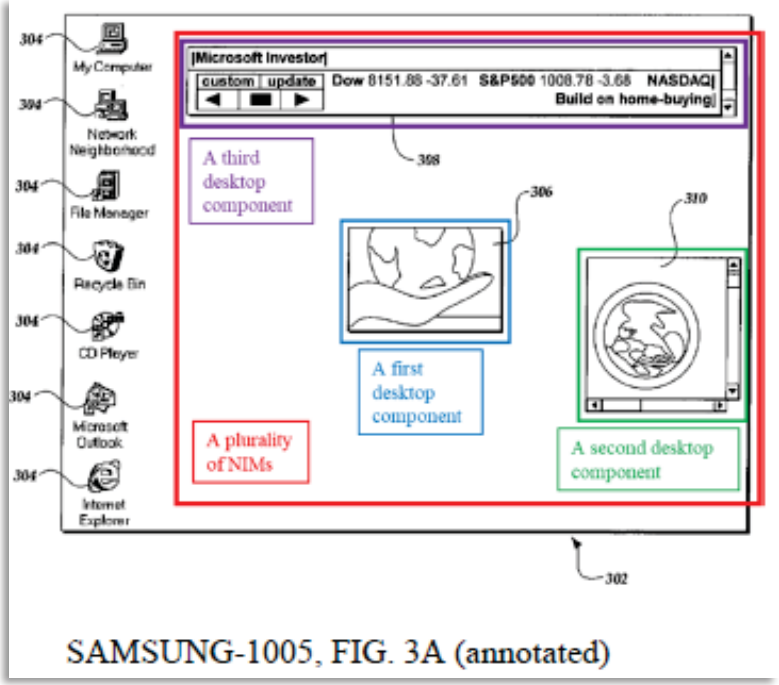

SAMSUNG-1005, FIG. 3A; (annotated, cited in Petition ('083 IPR), 47)

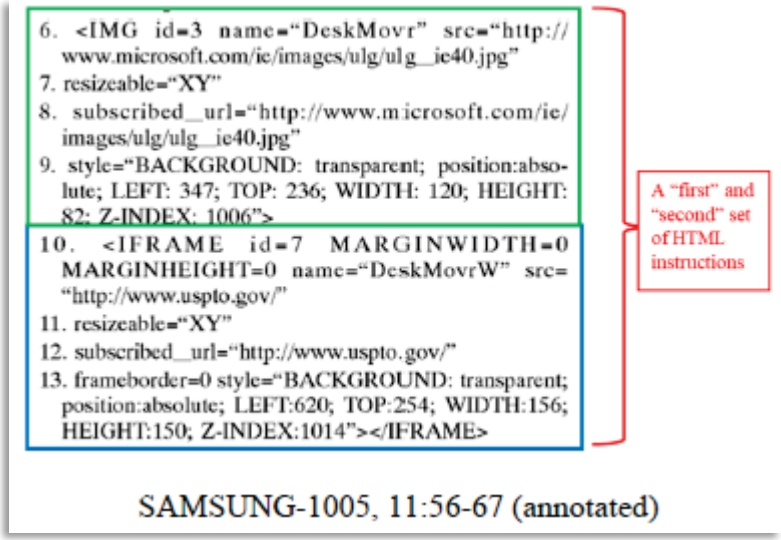

SAMSUNG-1005, 11:56-57 (annotated, cited in Petition ('083 IPR), 47)

FISH.

In re Harza held that mere duplication of parts absent some unexpected result carries no patentable significance

Claim 4 simply recites the same features as claim 1 for a "second" NIM and NIM template, and the second NIM and NIM template creates no "unexpected result." See, e.g., Petition ('083 IPR), 46-50.

(3) instructions configured (i) to cause the first networked information monitor to request content from the network location in the content reference via the TCP/IP protocol, and (ii) to cause the first networked information monitor to generate the graphical user interface of the first networked information monitor with the content received from the network location via the TCP/IP protocol within the frame;

SAMSUNG-1001 ('083 IPR), claim 1 (cropped)

(3) instructions configured (i) to cause the second networked information monitor to request content from the second network location in the second content reference via the TCP/IP protocol, and (ii) to cause the second networked information monitor to generate the graphical user interface of the second networked information monitor with the content received from the second network location via the TCP/IP protocol within the frame.

SAMSUNG-1001 ('083 IPR), claim 4 (cropped)

Brown/Brown-Wecker renders obvious “one or more processors configured to access or execute the [first and [second] NIM template” (’083 IPR)

DEMONSTRATIVE EXHIBIT – NOT EVIDENCE

"One or more processors configured to…"

"One or more processors configured to…" is recited in claim 1 of the '083 patent. Claim 5 recites "one or more processors are further configured to execute the second networked information monitor template." See, e.g., Petition ('083 IPR), 46-50.

one or more processors configured to access the first networked information monitor template, and to execute the first networked information monitor template such that the graphical user interface of the first networked information monitor is presented to a user on the electronic display having content received from the content reference therein.

SAMSUNG-1001 ('083 IPR), claim 1 (cropped)

5. The client device of claim **4**, wherein the one or more processors are further configured to execute the second networked information monitor template such that the graphical user interface of the second networked information monitor is presented to the user on the electronic display separately and discretely from the user interface of the first networked information monitor, and having content therein received from the second content reference.

SAMSUNG-1001 ('083 IPR), claim 5

DEMONSTRATIVE EXHIBIT – NOT EVIDENCE

DoDots' allegation that each NIM is completely independent is incorrect

Greenspun Testimony

"The Patent Owner's argument for this limitation **depends upon the assumption that NIMs are 'accessed and/or executed independently**,' which as explained above, is incorrect. POR, 45-46 …. On the contrary, each NIM is executed by the Home Dot, an application presumably executed by a processor (much in the same way Brown's 'shell,' executed by a processor, renders each and every desktop component from that's components HTML instructions). Petition, 39-41 … **The Patent Owner's argument depends entirely on this assumption and does not substantively address the analysis in the Petition**. POR, 45-46."

SAMSUNG-1026 ('083 IPR), ¶73 (cited in Reply ('083 IPR), 20)

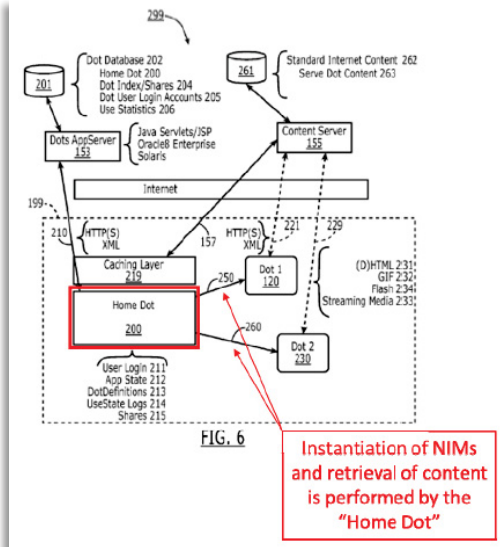

SAMSUNG-1001, FIG. 6 (annotated).

SAMSUNG-1001 ('083 Patent), FIG. 6 (cited in Reply ('083 IPR), 18)

'083 Patent

Data contained within an Application Media Package (Dot) is parsed by the Home Dot. Control calls contained within the Dot are also parsed and executed. The Home Dot may then instantiate a Dot without relying on functionality provided by a browser. In fact, in a preferred embodiment, a browser is not employed to instantiate or operate an Application Media Package.

SAMSUNG-1001 ('083 Patent), 20:38-44 (cited in Reply ('083 IPR), 18)

In re Harza held that mere duplication of parts absent some unexpected result carries no patentable significance

Claim 5 simply recites the same features as claim 1 for a "second" NIM and NIM template, and the second NIM and NIM template creates no "unexpected result."

one or more processors configured to access the first networked information monitor template, and to execute the first networked information monitor template such that the graphical user interface of the first networked information monitor is presented to a user on the electronic display having content received from the content reference therein.

SAMSUNG-1001 ('083 IPR), claim 1 (cropped)

5. The client device of claim **4**, wherein the one or more processors are further configured to execute the second networked information monitor template such that the graphical user interface of the second networked information monitor is presented to the user on the electronic display separately and discretely from the user interface of the first networked information monitor, and having content therein received from the second content reference.

SAMSUNG-1001 ('083 IPR), claim 5

Brown-Wecker renders obvious “transmitting a request to the server over the network, the request requesting networked information monitor template” (’545 IPR)

DEMONSTRATIVE EXHIBIT – NOT EVIDENCE

"Transmitting a request to the server over the network…"

"Transmitting a request to the server over the network…" is recited in claim 1 of the '545 patent.

transmitting a request to the server over the network, the request requesting networked information monitor template;

SAMSUNG-1001 ('545 IPR), claim 1 (cropped)

DEMONSTRATIVE EXHIBIT – NOT EVIDENCE

Brown-Wecker renders obvious a "transmitting a request to the server over the network, the request requesting [NIM] template"

DoDots argues that "Brown fails to provide any details of what is transmitted to a client computer running Brown's composite desktop when the shell user interface control is selected." POR, 42-47.

Greenspun Testimony
"Brown makes clear in its disclosure, as cited in the Petition, that its desktop components can be retrieved from '**remote computers**,' which, as noted in the petition, supports its combination with Wecker. Petition, 12-13; SAMSUNG-1005, FIG. 4."

SAMSUNG-1029 ('545 IPR), ¶70 (cited in Reply ('545 IPR), 19)

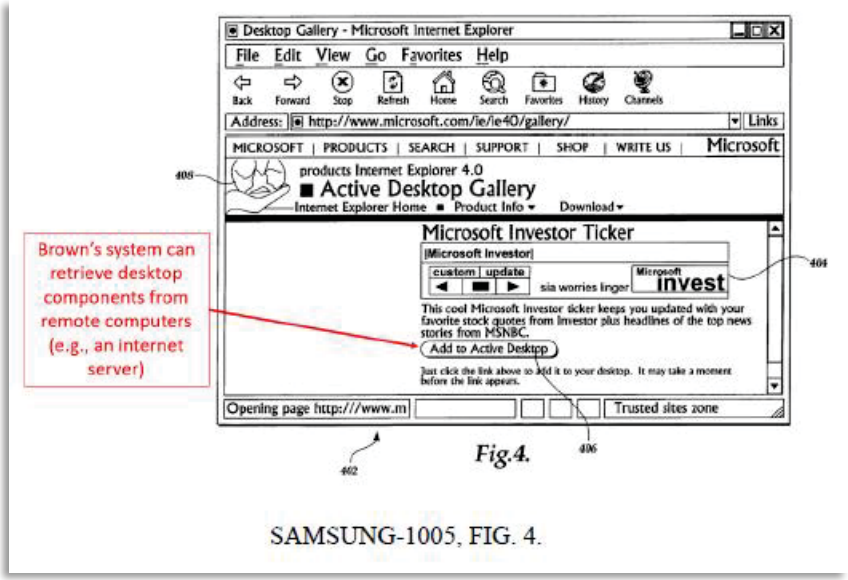

SAMSUNG-1005, FIG. 4.

SAMSUNG-1005, FIG. 4 (cited in Reply ('545 IPR), 20)

Brown

The present invention provides a mechanism for creating or customizing a user interface composite desktop by selecting various components and adding them to a desktop. The composite desktop is implemented as a Web page, and the creation of the composite desktop includes building a composite Web page made up of one or more components selected and retrieved from one or more locations. The locations may include Web pages, local storage media, or remote computers. A component can be a static graphic

SAMSUNG-1005, 4:13-21 (cited in Petition ('545 IPR), 12-13)

FISH.

Wecker teaches that templates are sent in response to a user request

DoDots argues that "Wecker does not resolve" the alleged deficiencies of Brown because "the Petition points to no evidence that Wecker's scripts/templates, are transmitted in response to a user request"

Greenspun Testimony
"[T]he Petition makes clear that '**the users of desktop 16** can preferably subscribe to channels' – sending a 'user request' for a template that defines the channel's content (via a 'subscription'). Petition, 12."

SAMSUNG-1029 ('545 IPR), ¶73 (cited in Reply ('545 IPR), 21)

Schmidt Testimony
"Indeed, Wecker describes that '**the users of desktop 16** can preferably **subscribe** to channels in a standard fashion which provide the user with certain channel content' and that the desktop can 'periodically retrieve or receive new and updated script, data and CDF files.' SAMSUNG-1005, 3:63-66, 4:3-6.."

SAMSUNG-1003 ('545 IPR), ¶37 (cited in Petition ('545 IPR), 21)

Wecker

That being the case, the users of desktop **16** can preferably subscribe to channels in a standard fashion which provide the user with certain channel content which can be browsed off-line or on-line. Desktop computer **16** is preferably pro-

SAMSUNG-1006, 3:63-66 (cited in Petition ('545 IPR), 21)

Brown/Brown-Wecker renders claims 4, 5, 6, 7, 14, and 15 obvious (’083 IPR)

70

DEMONSTRATIVE EXHIBIT – NOT EVIDENCE

Claims 4, 5, 6, 7, 14, and 15 of the ’083 patent

4. The client device of claim **1**, wherein the plurality of networked information monitor templates further comprises a second networked information monitor template defining a second networked information monitor, wherein the second networked information monitor template comprises:

(1) a second content reference that comprises a second network location, which is different from the network location in the content reference of the first networked information monitor template, at which content for the second networked information monitor is accessible via the TCP/IP protocol; and

(2) a definition of a graphical user interface of the second networked information monitor that lacks controls for manually navigating a network, and that includes a second frame within which content received from the second network location can be displayed; and

(3) instructions configured (i) to cause the second networked information monitor to request content from the second network location in the second content reference via the TCP/IP protocol, and (ii) to cause the second networked information monitor to generate the graphical user interface of the second networked information monitor with the content received from the second network location via the TCP/IP protocol within the frame.

SAMSUNG-1001 (’083 IPR), claim 4

5. The client device of claim **4**, wherein the one or more processors are further configured to execute the second networked information monitor template such that the graphical user interface of the second networked information monitor is presented to the user on the electronic display separately and discretely from the user interface of the first networked information monitor, and having content therein received from the second content reference.

SAMSUNG-1001 (’083 IPR), claim 5

6. The client device of claim **1**, wherein the one or more processors are further configured to transmit a request to a server for a further networked information monitor template responsive to reception of a user request for a further networked information monitor defined by the further networked information monitor template.

SAMSUNG-1001 (’083 IPR), claim 6

7. The client device of claim **6**, wherein the electronic storage is configured to electronically store the received further networked information monitor template, responsive to reception of the further networked information monitor template from the server.

SAMSUNG-1001 (’083 IPR), claim 7

14. The method of claim **9**, further comprising transmitting a request to a server for a further networked information monitor template responsive to reception of a user request for a further networked information monitor defined by the further networked information monitor template.

SAMSUNG-1001 (’083 IPR), claim 14

15. The method of claim **14**, further comprising, responsive to reception of the further networked information monitor template from the server, storing the received further networked information monitor template to the electronic storage.

SAMSUNG-1001 (’083 IPR), claim 15

DEMONSTRATIVE EXHIBIT – NOT EVIDENCE

Each of Brown's desktop components is separate and distinct

Greenspun Testimony

"With respect to claims 4 and 5, the Patent Owner argues that Brown 'does not disclose separate graphic user interfaces for the first and second alleged NIMs,' but rather 'one graphical user interface.' POR, 48-49. **However, the POR admits that 'desktop components 306, 308, 310 appear visually separate,' and the same can be seen from Brown's FIG. 3A**. POR, 48-49; Petition, 24-25; SAMSUNG-1027, 126:9-23."

SAMSUNG-1026 ('083 IPR), ¶74 (cited in Reply ('083 IPR), 20)

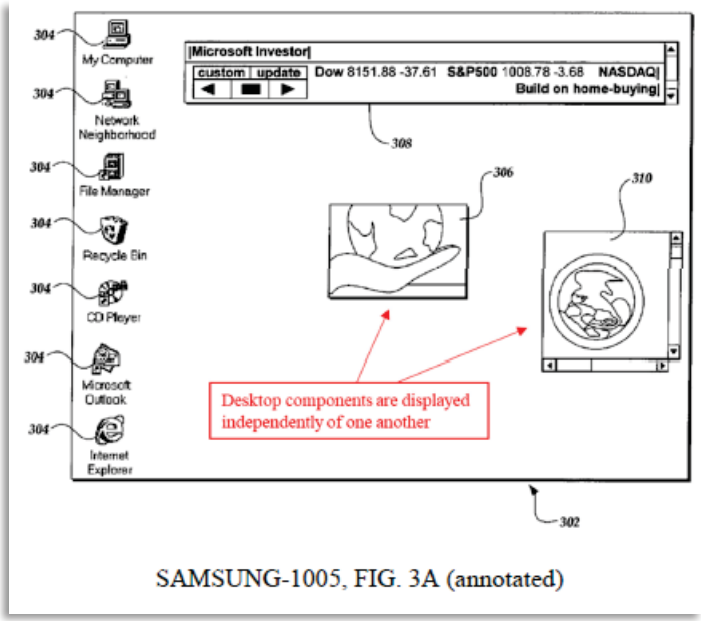

SAMSUNG-1005, FIG. 3A (annotated)

SAMSUNG-1005, FIG. 3A; (annotated, cited in Petition ('083 IPR), 50)

'083 Patent Owner Response

"Although desktop components 306, 308, 310 **appear visually separate**, they are part of the same graphical user interface – they are part of the same/single web page."

POR ('083 IPR) (cited in Reply ('083 IPR), 20)

Selker Testimony

Q. "And what is displayed here in figure 3 of Brown?"

A. "There's **three kinds of active desktop items**, one that's static and one that's animated and one that's got some updatable content."

SAMSUNG-1027 ('083 IPR), 127:9-13 (cited in Reply ('083 IPR), 20)

Brown retrieves desktop components from remote computers

Greenspun Testimony

"With respect to claims 6-7 and 14-15, which are directed to transmitting a request for a NIM and storing the NIM, respectively, the Patent Owner first argues that Brown fails to disclose these claims because 'Brown fails to provide any details of what is transmitted to a client computer running Brown's composite desktop when the shell user interface control is selected.' POR, 49-50. **Brown makes clear in its disclosure, as cited in the Petition, that its desktop components can be retrieved from 'remote computers,' which, as noted in the petition, supports its combination with Wecker**. Petition, 15-16."

SAMSUNG-1026 ('083 IPR), ¶75 (cited in Reply ('083 IPR), 50)

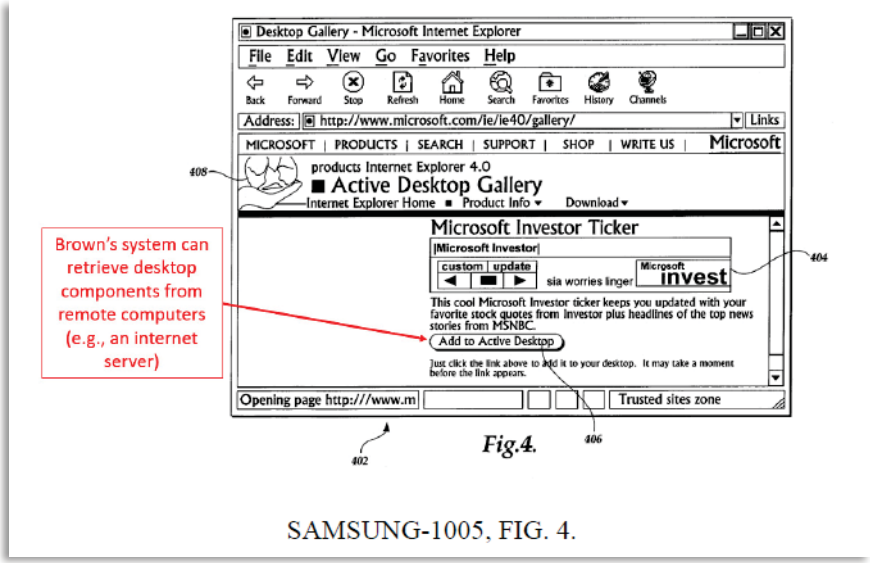

SAMSUNG-1005, FIG. 4; (annotated, cited in Reply ('083 IPR), 21)

Wecker teaches that templates are sent in response to a user request

DoDots argues that "Wecker does not resolve" the alleged deficiencies of Brown because "the Petition points to no evidence that Wecker's scripts/templates, are transmitted in response to a user request"

Greenspun Testimony
"Wecker makes clear that 'the users of desktop 16 can preferably subscribe to channels in a standard fashion which provide the user with certain channel content which can be browsed off-line or on-line' – **sending a 'user request' for a template that defines the channel's content (via a 'subscription')**. Petition, 51-52 (emphasis added)."

SAMSUNG-1026 ('083 IPR), ¶78 (cited in Reply ('083 IPR), 22)

Schmidt Testimony
"A POSITA would have understood or found obvious that 'one or more processors' would have retrieved the script and CDF files **after a 'user request,'** as desktop computers include processors that execute similar program functions."

SAMSUNG-1003 ('083 IPR), ¶92 (cited in Petition ('083 IPR), 51)

Wecker

Desktop computer **16** will also be described in greater detail later in the specification. Briefly, however, desktop computer **16** is preferably provided with a standard web browser, such as Internet Explorer 4.0 commercially available from the Microsoft Corporation of Redmond, Wash. That being the case, the users of desktop **16** can preferably subscribe to channels in a standard fashion which provide the user with certain channel content which can be browsed off-line or on-line. Desktop computer **16** is preferably provided with a loadable transport that accesses the script files

SAMSUNG-1006, 3:58-67 (cited in Petition ('083 IPR), 51)

DoDots distorts the combination of Brown and Wecker

DoDots argues that "Wecker does not resolve" the alleged deficiencies of Brown because (2) "Wecker's scripts/templates are not NIM templates …" and (3) "Wecker provides no details regarding what would be contained in any scripts/templates that are transmitted from a server …"

Greenspun Testimony
"With respect to (2) and (3), **the Petition never alleges that Wecker's 'scripts' are NIM templates** and makes clear that HTML instructions for Brown's desktop components are the claimed NIM template. POR, 50-51; Petition, 19-32."

SAMSUNG-1026 ('083 IPR), ¶77 (cited in Reply ('083 IPR), 22)

Schmidt Testimony
"Moreover, a POSITA would have recognized or found obvious that **the 'HTML instructions' that define Brown's 'desktop components' are a "networked information monitor template"** because these HTML instructions have similar features."

SAMSUNG-1003 ('083 IPR), ¶54 (cited in Petition ('083 IPR), 25–26)

75

Brown-Wecker renders claims 1-4, 7-16, and 19-24 obvious (’407 IPR)

DEMONSTRATIVE EXHIBIT – NOT EVIDENCE

Brown-Wecker renders claims 1-4, 7-16, and 19-24 obvious

DoDots argues that "Wecker does not teach 'electronic storage having stored thereon a plurality of networked information monitor templates,' and that 'Petitioner appears to imply that Wecker's script/default templates are NIM templates' and 'the Petition fails to discuss Wecker's templates having all of the claimed features of a NIM template.' POR, 43-45."

Greenspun Testimony
"The Petition never alleges that Wecker's 'scripts' are NIM templates and makes clear that HTML instructions for Brown's desktop components are the claimed NIM template, and that 'a user could download desktop components, and their associated HTML instructions, to their composite desktop,' **similar to Wecker's teachings of its script templates**. POR, 43-45; Petition, 12-16, 31; SAMSUNG-1003, ¶¶35-42."

SAMSUNG-1029 ('407 IPR), ¶71 (cited in Reply ('407 IPR), 18-19)

77

Brown-Wecker renders claims 1-4, 7-16, and 19-24 obvious

DoDots argues that "[n]othing in Dr. Schmidt's opinion or the Petition describes a server that receives a request for a NIM template and transmits a NIM template in response to this request" because "an HTML file is not a NIM template."

Greenspun Testimony
"**This circular argument depends entirely on the Patent Owner's arguments above [for Brown-Wecker] and fails with them**. *See above*, §VI.A. The Petition makes clear that "the users of desktop 16 can preferably subscribe to channels" – sending a "user request" for a template that defines the channel's content (via a "subscription"), and that Brown and Wecker both disclose "download[ing] digital information from 'server' computers." Petition, 13, 37, 52-53; SAMSUNG-1003, ¶¶35-42."

SAMSUNG-1029 ('407 IPR), ¶71 (cited in Reply ('407 IPR), 19)

78

A POSITA would have combined Brown-Beer and Brown-Wecker-Beer (’407 and ’545 IPRs)

DEMONSTRATIVE EXHIBIT – NOT EVIDENCE

Beer (US 5,793,368)

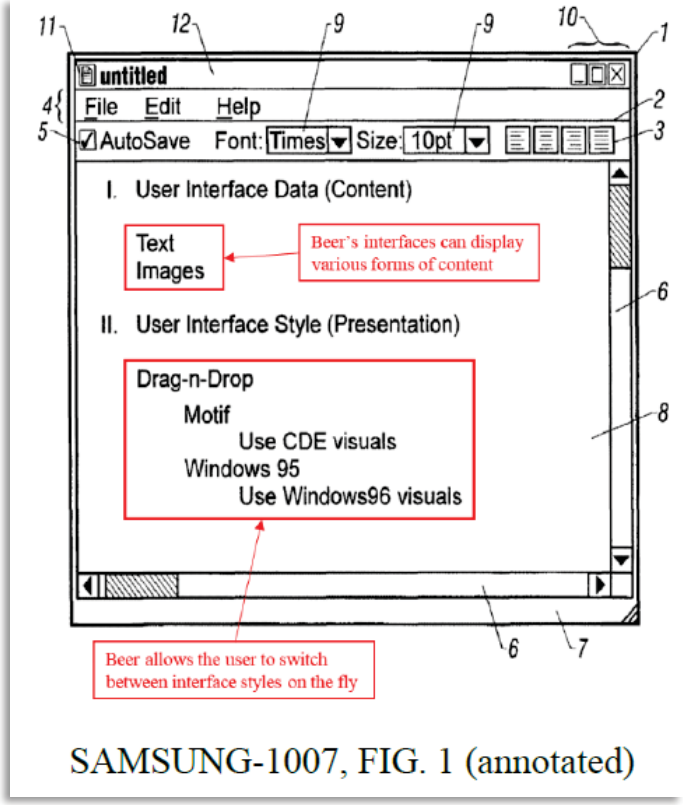

SAMSUNG-1007 ('407 IPR), FIG. 1 (cited in Petition ('407 IPR), 59)

Schmidt Testimony
"Beer describes "[a] method and system for allowing a user to retrieve a user interface and a visual style from a local or remote storage unit, rapidly display the visual stylized user interface, and dynamically switch between visual styles." SAMSUNG-1007, Abstract."

SAMSUNG-1003 ('407 IPR), ¶138 (cited in Petition ('407 IPR), 58-59)

A POSITA would have combined Brown-Beer and Brown-Wecker-Beer

The petition established multiple reasons why a POSITA would have combined Brown and Beer, or Brown, Wecker, and Beer, and expected success in doing so.

Schmidt Testimony
"First, a POSITA would have recognized that Beer's 'User Interface Language' also referred to as 'UILs,' are data structures corresponding to the 'HTML templates' that define Brown's 'desktop components,' and as a result, **the additional capability of Beer could be incorporated without substantially modifying Brown's system**."

SAMSUNG-1003 ('407 IPR), ¶142 (cited in Petition ('407 IPR), 61)

Schmidt Testimony
"Second, a POSITA would have understood or found obvious that **the same content may be displayed in multiple styles across operating systems**. Indeed, Brown describes that 'those skilled in the art will appreciate that the invention may be practiced with other computer system configurations.' SAMSUNG-1005, 4:44-49. Beer provides such an example of 'other computer system configurations' and describes that operating systems can include 'UNIX' and 'Macintosh System 7,' in addition to the 'Windows 95' operating system already described by Brown and Wecker."

SAMSUNG-1003 ('407 IPR), ¶143 (cited in Petition ('407 IPR), 62)

A POSITA would have combined Brown-Beer and Brown-Wecker-Beer

DoDots argues that "there would be no motivation to combine Beer with either Brown or Brown in combination with Wecker" because "Beer is concerned with obtaining user interface templates, which is not the same as internet content." POR, 46-47.

Greenspun Testimony
"First, [this argument] assumes that references must have the exact same purpose to be combined. POR, 46-47. **This is not what is required for obviousness**. Petition, 59-62 ('the application of known techniques (e.g., Beer's PGUI parser) to a known structure (e.g., Brown's client computer) to yield predictable results'). **The Patent Owner fails to explain what is not 'predictable' about the combination of Brown, Wecker, and Beer, as explained in the petition**. POR, 46-47; Petition, 59-62; SAMSUNG-1003, ¶¶138-144."

SAMSUNG-1029 ('407 IPR), ¶77 (cited in Reply ('407 IPR), 21–22)
SAMSUNG-1029 ('545 IPR), ¶75 (cited in Reply ('545 IPR), 21–22)

A POSITA would have been prompted to pursue this implementation because doing so is merely the application of known techniques (*e.g.*, Beer's PGUI parser) to a known structure (*e.g.*, Brown's client computer) to yield predictable results. *See also KSR Int'l Co. v. Teleflex Inc.*, 550 U.S. 398, 417 (2007).

Petition ('407 IPR), 62
Petition ('545 IPR), 54

FISH.

82

A POSITA would have combined Brown-Beer and Brown-Wecker-Beer

DoDots argues that "there would be no motivation to combine Beer with either Brown or Brown in combination with Wecker" because "Beer is concerned with obtaining user interface templates, which is not the same as internet content." POR, 46-47.

Greenspun Testimony
"Second, contrary to the Patent Owner's argument (which is improper), Beer describes that its PGUI "displays the user interface rendered in the specified style for response to events and **for display of content**." SAMSUNG-1007, 2:33-35, 14:11-22; Petition, 58-59; SAMSUNG-1003, ¶145. **Accordingly, even if the Patent Owner's misguided requirement for obviousness was applied, Brown, Wecker, and Beer would still be combinable**. POR, 46-47."

SAMSUNG-1029 ('407 IPR), ¶78 (cited in Reply ('407 IPR), 22)
SAMSUNG-1029 ('545 IPR), ¶76 (cited in Reply ('545 IPR), 22)

Beer

(4) The PGUI retrieves a defined visual style object (user-defined or a default style), and renders the appearance of each part of the user interface in accordance with the defined visual style.
(5) The PGUI displays the user interface rendered in the specified style for response to events and for display of content.
(6) The PGUI responds to any event affecting apart of the user interface in accordance with the functional attribute of that part, or in accordance with the functional attribute of a parent part of such part.
(7) The PGUI renders the appearance of each part of the user interface in accordance with any newly selected visual style, and redisplays the changed user interface for response to events and for display of content.

SAMSUNG-1007, 14:9-22 (cited in Reply ('407 IPR), 22,('545 IPR), 22)

A POSITA would have combined Brown-Beer and Brown-Wecker-Beer

DoDots argues that "Beer's UIL is a custom language related to a user interface, while HTML is markup language" which are "fundamentally different." POR, 47.

Greenspun Testimony
"Beer discloses that 'The UIL user interface description is preferably a text file in **a format similar to various text-markup languages, such as HTML**.' SAMSUNG-1007, 3:42-44 (emphasis added). The Patent Owner provides no explanation of why a format that is similar to HTML is 'fundamentally different' than HTML itself. POR, 47."

SAMSUNG-1029 ('407 IPR), ¶79 (cited in Reply ('407 IPR), 22)
SAMSUNG-1029 ('407 IPR), ¶77 (cited in Reply ('407 IPR), 22)

Beer

The UIL provides the syntax and grammar rules for describing a user interface. The UIL user interface description is preferably a text file, in a format similar to various text-markup languages, such as HTML (Hyper Text Markup Language). Since the UIL user interface description is a text file that is parsed during interpretation, corruption of the file can be readily detected and handled in error routines. However, the UIL description may also be compiled to a binary format and/or compressed to reduce size.

SAMSUNG-1007, 3:41-49 (cited in Reply ('407 IPR), 22,('545 IPR), 22)

A POSITA would have combined Brown-Beer and Brown-Wecker-Beer

DoDots argues "Brown's passing mention that the invention could be 'practiced with other computer system configurations' does not eliminate the fact that it is tied to a computer desktop" and "there would be no reason to implement Beer, because there were no issues arising from [appearances] created by different [operating] systems." POR, 48.

Greenspun Testimony

"The Patent Owner appears to be alleging that Beer's disclosure … [would] dissuade a POSITA from implementing Beer's techniques on a personal computer, and that a user would have no need to display multiple OS styles on a personal computer. [POR, 48]. This argument overlooks that (1) **Beer specifically mentions its techniques can be practiced on 'personal computers,'** and (2) Beer does not describe multiple OS operating on the same computer, but rather **implementing a style of an OS on a computer not running that OS** ('a Windows95 style for applications running under the UNIX operating system.' SAMSUNG-1007, 1:15-40, 3:16-33; SAMSUNG-1003, ¶¶138-139."

Beer

SAMSUNG-1029 ('407 IPR), ¶80 (cited in Reply ('407 IPR), 22–23)
SAMSUNG-1029 ('545 IPR), ¶80 (cited in Reply ('545 IPR), 22–23)

2. Description of Related Art

Present computer systems, such as personal computers and workstations, generally have a graphical user interface (GUI). A GUI allows a user to interact with a computer system by using an input device (e.g., a pointing device such as a mouse or touchpad, a keyboard, or voice control) and icon or graphics-based commands and controls. Presently,

SAMSUNG-1007, 1:15-22 (cited in Reply ('407 IPR), 23 ('545 IPR), 23)

styles for a user interface. For example, a user could configure a word processing application to appear like either of the examples in FIG. 1 or FIG. 2, regardless of the actual underlying operating system. Thus, a user can have a Windows95 style for applications running under the UNIX operating system, or a Motif style for applications running under the Macintosh System 7 operating system. Further, the user can add to or change the functionality of an application by defining additional controls for an application.

SAMSUNG-1007, 3:25-33 (cited in Reply ('407 IPR), 23,('545 IPR), 23)

Claims 5-6 and 17-18 of the ’407 patent

5. The client computing device of claim **2**, wherein the one or more computer program modules and the networked information monitor template are configured such that modifying the feature of the viewer graphical user interface comprises adjusting a size of the frame of the viewer graphical user interface.

6. The client computing device of claim **2**, wherein the one or more computer program modules and the networked information monitor template are configured such that modifying the feature of the viewer graphical user interface comprises changing a color of a frame border or background of the viewer graphical user interface.

SAMSUNG-1001 (’407 IPR), claims 5-6

17. The method of claim **14**, wherein modifying the feature of the viewer graphical user interface comprises adjusting a size of the frame of the viewer graphical user interface.

18. The method of claim **14**, wherein modifying the feature of the viewer graphical user interface comprises changing a color of a frame border or background of the viewer graphical user interface.

SAMSUNG-1001 (’407 IPR), claims 17-18

DEMONSTRATIVE EXHIBIT – NOT EVIDENCE

Claims 5, 11-12, and 16-21 of the ’545 patent

5. The method of claim **1**, wherein the networked information monitor template includes instructions in extensible markup language (XML) format, and further wherein the method further comprises parsing the definition of the viewer graphical user interface.

SAMSUNG-1001 (’545 IPR), claim 5

11. The method of claim **1**, further comprising:

executing a client parser application that is separate from the networked information monitor template, the client parser application being configured to present the viewer graphical user interface defined by the networked information monitor template on the client computing device, to generate the request for the content that is transmitted to the first network location referenced by the definition of the first content element for the networked information monitor template, and to present the first content element received from the first network location within the viewer graphical user interface defined by the networked information monitor template.

12. The method of claim **1**, further comprising causing the networked information monitor to communicate with another networked information monitor.

SAMSUNG-1001 (’545 IPR), claims 11-12

16. A computer-implemented method of obtaining and displaying content obtained over a network to a user on a client computing device, the method being implemented in the client computing device, the client computing device including electronic storage, a display, and one or more processors configured to execute one or more computer program modules, the method comprising:

executing on the client computing device client parser, wherein the execution of the client parser results in the client computing device:

transmitting over the network a first content request to a first network location referenced by a definition of a first content element in a networked information monitor template that is readable by the client parser;

receiving, over the network, the first content element transmitted responsive to the first content request;

presenting a viewer graphical user interface defined by the networked information monitor template on the display of the client computing device and wherein the viewer graphical user interface defined by the networked information monitor template is presented separate from and outside of any other graphical user interface that includes user controls for specifying the first network location from which the first content element for the networked information monitor is served over the network; and

presenting the received content element within the viewer graphical user interface defined by the networked information monitor template, wherein the definition of the viewer graphical user interface and/or the first content element define all controls for enabling a user to interact with the first content element through the viewer graphical user interface.

SAMSUNG-1001 (’545 IPR), claim 16

DEMONSTRATIVE EXHIBIT – NOT EVIDENCE

Claims 5, 11-12, and 16-21 of the ’545 patent

17. The method of claim **16**, wherein execution of the client parser further results in the client computing device determining that the first element content modifies the networked information monitor template and responsive to such determination, modifying the networked information monitor template prior to the step of presenting the graphical user interface.

18. The method of claim **16**, further comprising presenting an icon representing networked information monitor associated with the networked information monitor template on the display of the client computing device, and wherein execution of the client parser to perform one or more of the transmitting operation, the presenting the viewer graphical user interface operation, or presenting the first content element operation is responsive to reception of selection by a user of the icon.

19. The method of claim **16**, further comprising invoking the client parser an initiating one or more of the transmitting operation, the presenting the viewer graphical user interface operation, or presenting the first content element operation automatically during a start-up process of the client computing device.

SAMSUNG-1001 (’545 IPR), claims 17-19

20. The method of claim **19**, wherein execution on the client computing device of the client parser further results in the client computing device:

transmitting over the network a second content request to a second network location referenced by a definition of a second content element in a second networked information monitor template that is readable by the client parser;

receiving the second content element transmitted responsive to the second content request;

presenting a second viewer graphical user interface defined by the second networked information monitor template on the display of the client computing device, wherein the second viewer graphical user interface lacks user controls, wherein the definition of the second viewer graphical user interface and/or the second content element define all controls for enabling a user to interact with the second content element through the second viewer graphical user interface; and

presenting the second content element within the viewer second graphical user interface,

wherein execution of the client parser to perform the transmitting the second content request, the presenting the second viewer graphical user interface operation, and the presenting the second content element is responsive to reception of a selection to initiate a second networked information monitor associated with the second networked information monitor template.

21. The method of claim **16**, wherein the network is the internet.

SAMSUNG-1001 (’545 IPR), claims 20-21

DEMONSTRATIVE EXHIBIT – NOT EVIDENCE

88

A POSITA would have combined Shimada and Buchholz (all IPRs)

FISH.

DEMONSTRATIVE EXHIBIT – NOT EVIDENCE

Shimada (US 6,789,263)

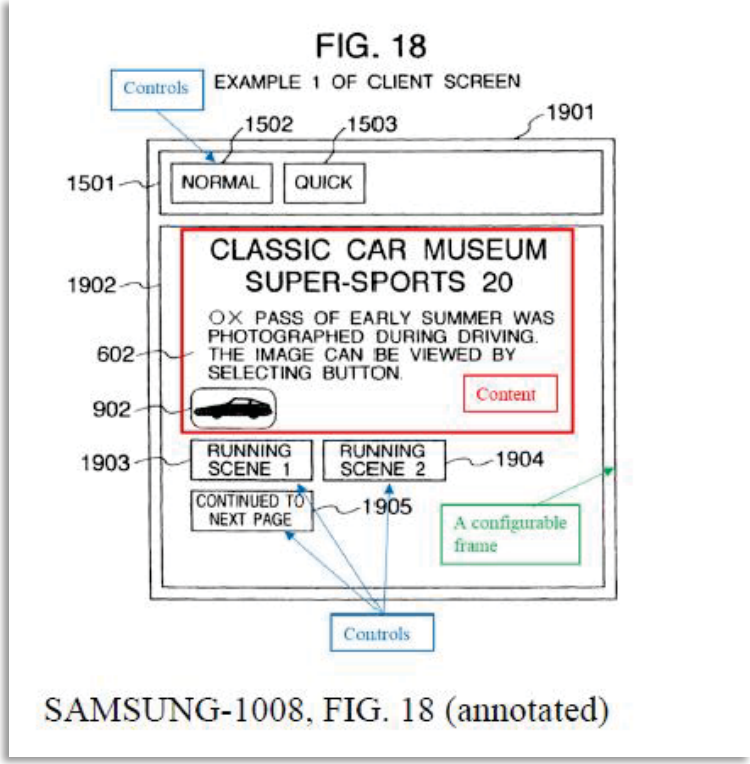

SAMSUNG-1008, FIG. 18 (cited in Petition ('083 IPR), 58)

"screen configuration data [describes] configuration of [a] screen output of an information processing unit … screen configuration data [is] capable of displaying a plurality of screen configurations on the same screen."

SAMSUNG-1008, Abstract (cited in Petition ('083 IPR), 58)

DEMONSTRATIVE EXHIBIT – NOT EVIDENCE

Buchholz (US 6,088,340)

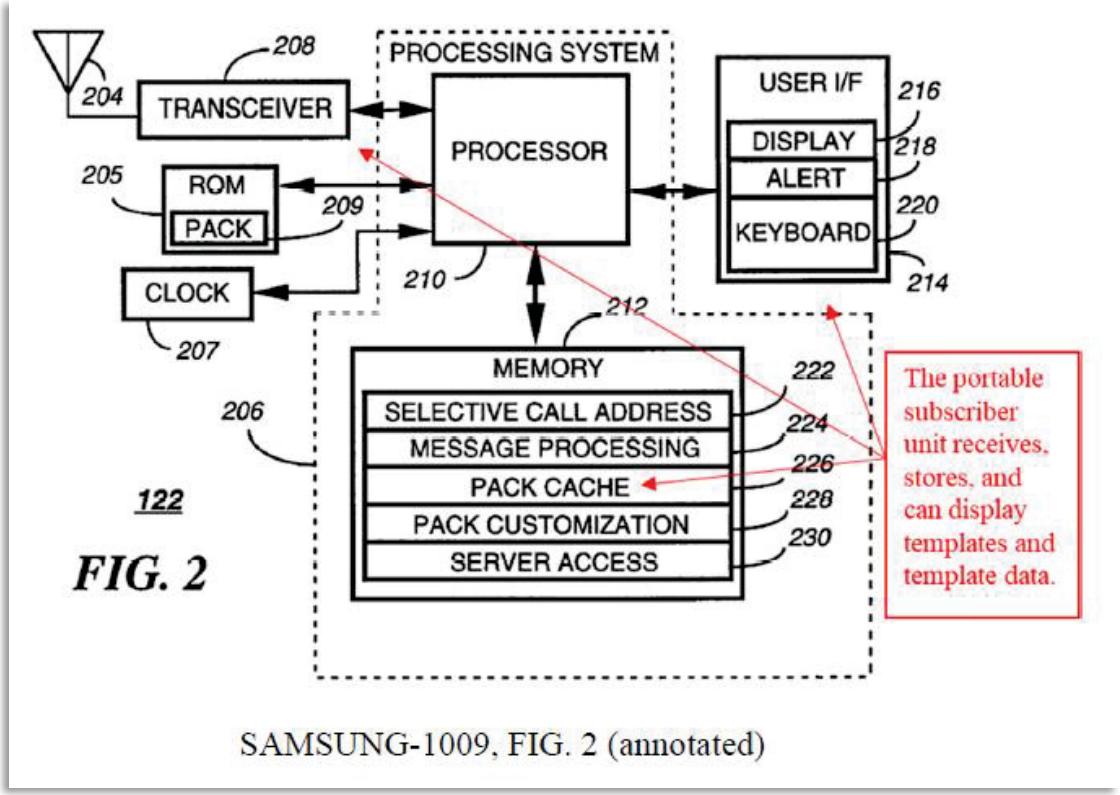

SAMSUNG-1009, FIG. 2 (cited in Petition ('083 IPR), 60)

"a method in a wireless communication system for controlling a display of template data by a portable subscriber unit."

SAMSUNG-1009, 1:57-59 (cited in Petition ('083 IPR), 59)

DEMONSTRATIVE EXHIBIT – NOT EVIDENCE

The Shimada-Buchholz Combination

Shimada and Buchholz are both directed to a similar issue – mitigating download times in wireless networks:

Schmidt Testimony
"First, a POSITA would have recognized that both Shimada and Buchholz **complement each other's ability to mitigate long download times in networks with 'small network transmission capacity,'** as described by Shimada. SAMSUNG-1008, 1:40-44. Indeed, Buchholz also contemplates such networks, for example, 'wireless communication systems' that can experience 'excessive latency' when requesting and displaying web pages. SAMSUNG-1009, 1:26-37. **A POSITA would have recognized that the techniques of these references were complementary, and each would enhance the abilities of the other."**

SAMSUNG-1003 ('083 IPR), ¶122 (cited in Petition ('083 IPR), 61-62)

Shimada

The capacity of data handled in the multimedia network system, such as static images, moving images, speech, and so forth, is by far greater than that of texts.

Therefore, when the multimedia network system is utilized in the environment having a small network transmission capacity, the problem develops in that an extremely long time is necessary for the data transfer.

SAMSUNG-1008, 1:37-44 (cited in Petition ('083 IPR), 61-62)

Buchholz

In a similar vein, prior art wireless communication systems have begun to support access to the Internet. Wireline techniques and protocols for Internet access have been tried in wireless systems, but have encountered problems. The technique of requesting a single WEB page (or portion of a page) and then displaying the page (or portion) before requesting another page (or another portion of the same page), as currently used in the wireline protocols, can introduce excessive latency in store-and-forward wireless systems. This is because such systems must queue each response until adequate air time becomes available to transmit the response.

SAMSUNG-1009, 1:27-38 (cited in Petition ('083 IPR), 61-62)

DEMONSTRATIVE EXHIBIT – NOT EVIDENCE

92

The Shimada-Buchholz Combination

The combination of Shimada and Buchholz does not require the bodily incorporation of Shimada's expanding device into Buchholz:

Schmidt Testimony

"A POSITA would have had a reasonable chance of success in **implementing the 'screen configuration data' of Shimada into the 'subscriber units' of Buchholz** since this would require little to no modification of both systems and would merely involve the application of a known technique to yield predictable results."

SAMSUNG-1003 ('083 IPR), ¶123 (cited in Petition ('083 IPR), 61-62)

Patent Owner Response

"Shimada's solution involves positioning an expanding device between a server and a client. … Buchholz, however, does not have a device positioned between the server and client that works with a client to build/display a page."

Patent Owner Response ('083 IPR), 60

Greenspun Testimony

"The Patent Owner appears to reverse the roles of the two references. POR, 99-102. It appears DoDots argues that Petitioner relies on the structure of Shimada to implement the techniques of Buchholz, when in fact, it is the opposite…. **Shimada's 'expanding device' is not part of the combination**, nor is any hardware component of Shimada necessarily. [Petition 62]."

SAMSUNG-1026 ('083 IPR), ¶82 (cited in Reply ('083 IPR), 23)

DEMONSTRATIVE EXHIBIT – NOT EVIDENCE

The Shimada-Buchholz Combination

The combination of Shimada and Buchholz does not require the bodily incorporation of Shimada's expanding device into Buchholz:

Greenspun Testimony
"Indeed, as described in the Petition, Buchholz's subscriber units **are already configured to store, parse, and display collections of HTML-like templates** (using 'pack cache 226,' 'conventional display 216,' and 'processing system 206,' respectively). Petition, 63-65, 82-84. Although Shimada's system is more technically involved, a POSITA looking to implement the templates of Shimada in a more capable Buchholz device would have recognized these complex features could be discarded."

SAMSUNG-1026 ('083 IPR), ¶82 (cited in Reply ('083 IPR), 23)

Buchholz

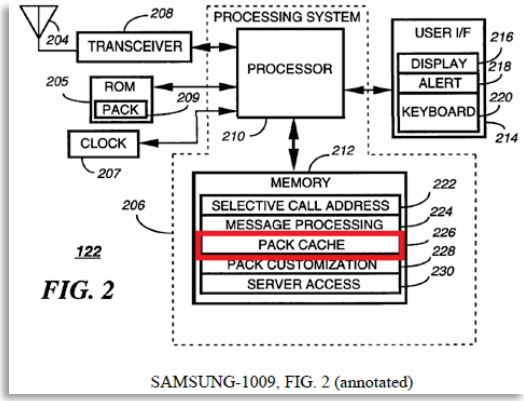

SAMSUNG-1009, FIG. 2 (cited in Petition ('083 IPR), 64)

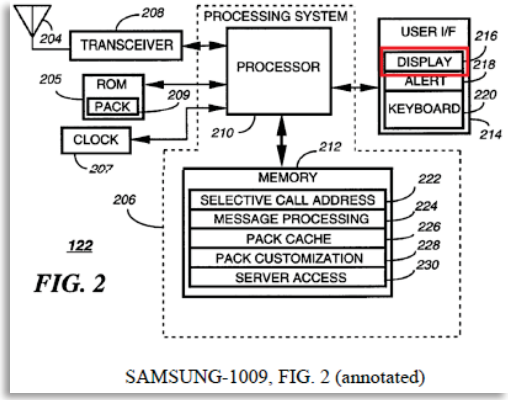

SAMSUNG-1009, FIG. 2 (cited in Petition ('083 IPR), 82)

Petition

Consistent with this disclosure, Buchholz describes that its portable subscriber units contain a "processing system 206" ("**one or more processors**") which comprises a "conventional processor 210 and a conventional memory 212," where the memory 212 further comprises "a server access element 230 for programming the processing system 206 to allow a user to **access the server 124** ("**access the first networked information monitor template**") for creating, modifying ("**execute the first networked information monitor template**"), and **downloading a pack**." SAMSUNG-1009, 4:14-31, FIG. 2; SAMSUNG-1003, ¶150.

'Petition ('083 IPR), 83 (citing SAMSUNG-1009, 4:14-31)

DEMONSTRATIVE EXHIBIT – NOT EVIDENCE

Buchholz is compatible with HTML, and there is no support in the record to the contrary

DoDots alleges that Buchholz, when discussing something "similar" to HTML, proposes "some custom variant of HTML for a mobile device" that would be incompatible with HTML techniques. POR, 61-62.

Greenspun Testimony
"The POR does not elaborate on what this 'custom variant' could be, and neither does Dr. Selker's testimony. POR, 61-62; DODOTS-2010, ¶¶231-232. They also do not explain why, if this 'custom variant' is so dissimilar to HTML, **Buchholz would specifically say it templates are similar to HTML**. *Id*. As Patent Owner admits, 'Buchholz is completely silent regarding any details of its templates.' POR, 64.

SAMSUNG-1026 ('083 IPR), ¶83 (cited in Reply ('083 IPR), 23-24)

'083 Patent Owner Response
"Buchholz is **completely silent** regarding any details of its templates."

Patent Owner Response ('083 IPR) (cited in Reply ('083 IPR), 24)

Greenspun Testimony
"Ironically, this **further supports the motivation for a POSITA to seek out references that describe HTML-like templates (i.e., Shimada)**, as a POSITA would necessarily need to turn to other references to glean these implementation details.

SAMSUNG-1026 ('083 IPR), ¶83 (cited in Reply ('083 IPR), 24)

Buchholz

user. The template is created by using a template mark-up language, similar to the Hypertext Mark-up Language (HTML) used in creating World Wide Web pages. A template can, for example, define where, and in what size and color, the corresponding template data is to be displayed.

SAMSUNG-1009, 5:9-11 (cited in Petition ('083 IPR), 62)

DEMONSTRATIVE EXHIBIT – NOT EVIDENCE

Features Alleged to be Lacking in Shimada-Buchholz

FISH.

DEMONSTRATIVE EXHIBIT – NOT EVIDENCE

Table of Contents for Shimada and Buchholz

Shimada-Buchholz renders obvious “view characteristics” (all IPRs)	98
Shimada-Buchholz renders obvious “control characteristics” (all IPRs)	101
Shimada-Buchholz’s HTML is a “data structure” (all IPRs)	104
Shimada-Buchholz renders obvious a “fully configurable frame” (all IPRs)	107
Shimada-Buchholz renders obvious “electronic storage having stored thereon a plurality of networked information monitor templates” (’083 IPR)	110
Shimada’s URLs are instructions for the transmission and reception of content over a network from a web server (’407 IPR) and Shimada’s URLs reference content elements (’545 IPR)	113
Shimada-Buchholz renders claims 4 and 12 obvious (’083 IPR)	117
Shimada-Buchholz renders dependent claims obvious (’407 and ’545 IPRs)	121

DEMONSTRATIVE EXHIBIT – NOT EVIDENCE

Shimada-Buchholz renders obvious “view characteristics” (all IPRs)

DEMONSTRATIVE EXHIBIT – NOT EVIDENCE

“View characteristics”

A “view characteristics” are recited in the NIM Template construction.

“a data structure that defines the characteristics of a NIM, including the NIM frame, **view**, and control **characteristics**, and that excludes executable applications/compiled code.”

Petition (’083 IPR), 4-5 (citing SAMSUNG-1001 (’083 IPR) 7:19-23)

Shimada-Buchholz renders obvious "view characteristics"

DoDots argues that "[t]he Petition provides no discussion of what a view characteristic means to a POSITA in the context of the '083 patent, or Shimada-Buchholz."

Greenspun Testimony
"The Patent Owner appears to be arguing that the feature 'view characteristics' takes on special meaning in the context of the '083 patent. POR, 66-68. In actuality, details of 'view characteristics' do not appear in the '083 patent, which **simply describes throughout that the content of a NIM may be 'viewed.'** SAMSUNG-1001, 7:63-66, 8:32, 11:22-23, 18:51-55. Accordingly, Shimada-Buchholz satisfies this feature **simply because its content can be observed by a user through screen configuration data ('viewed')** based on the characteristics defined in its templates. *Id.*; Petition, 71-72."

SAMSUNG-1026 ('083 IPR), ¶84 (cited in Reply ('083 IPR), 24-25)

'083 Patent

advertising, as discussed below. As described below, the statistical information gathered in accordance with the invention includes fully traced events defining the type of content and the duration over which all content is viewed by a user. This type of comprehensive information is not available using

SAMSUNG-1001 ('083 Patent) 7:63-67 (cited in Reply ('083 IPR), 24)

Dot. Therefore, Dots are the integration of application and media. A Dot may be viewed as a free-floating mini-site. It is frame in which Internet content is presented (although lacking the most common functionality typically associated with a browser, navigation).

SAMSUNG-1001 ('083 Patent) 8:31-35 (cited in Reply ('083 IPR), 24)

The present invention provides an alternative model of viewing content obtained from the Internet. Unlike the web page model requiring a web browser, the present invention is founded on the premise that the basic unit of the Web and its media should not be limited or restricted to a webpage-based display for presentation in a conventional browser nor should the user's experience of the Web be limited to one page at a time as defined by a conventional browser (such as Microsoft's Internet Explorer™).

SAMSUNG-1001 ('083 Patent) 11:22-30 (cited in Reply ('083 IPR), 24)

DEMONSTRATIVE EXHIBIT – NOT EVIDENCE

Shimada-Buchholz renders obvious “control characteristics” (all IPRs)

DEMONSTRATIVE EXHIBIT – NOT EVIDENCE

“Control characteristics”

“Control characteristics” are recited in the NIM Template construction.

“a data structure that defines the characteristics of a NIM, including the NIM frame, view, and **control characteristics**, and that excludes executable applications/compiled code.”

Petition (’083 IPR), 4-5 (citing SAMSUNG-1001 (’083 IPR) 7:19-23)

DEMONSTRATIVE EXHIBIT – NOT EVIDENCE

Shimada-Buchholz renders obvious "view control characteristics"

DoDots alleges that "[t]he Petition does not identify anything in the Shimada/Buchholz specifications/figures as being a 'control' characteristic." POR, 68-69.

Greenspun Testimony
"The issue the Patent Owner appears to take is that the Petition allegedly does not identify the 'characteristic' of these controls. POR, 69. The distinction the Patent Owner makes is insignificant, and does not change the fact that Shimada's screen configuration data includes controls that are presented to a user (manifesting 'characteristics'). POR, 68-69; Petition, 71-73."

SAMSUNG-1026 ('083 IPR), ¶85 (cited in Reply ('083 IPR), 56)

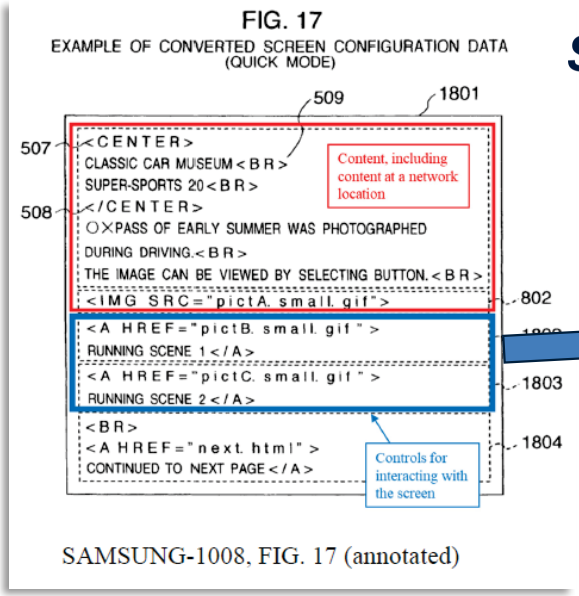

Shimada

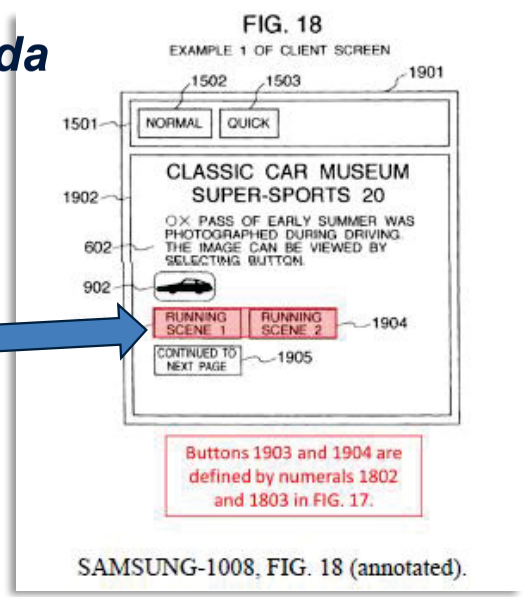

SAMSUNG-1008, FIG. 17 (cited in Petition ('083 IPR), 73)

SAMSUNG-1008, FIG. 18 (cited in Reply ('083 IPR), 26)

DEMONSTRATIVE EXHIBIT – NOT EVIDENCE

Shimada-Buchholz's HTML is a "data structure" (all IPRs)

DEMONSTRATIVE EXHIBIT – NOT EVIDENCE

“Data structure”

A “data structure” is recited in the NIM Template construction.

“a **data structure** that defines the characteristics of a NIM, including the NIM frame, view, and control characteristics, and that excludes executable applications/compiled code.”

Petition (’083 IPR), 4-5 (citing SAMSUNG-1001 (’083 IPR) 7:19-23)

DEMONSTRATIVE EXHIBIT – NOT EVIDENCE

Shimada-Buchholz's HTML is a "data structure"

Greenspun Testimony
"The Patent Owner alleges that "HTML (and certainly HTML fragments) are not data structures **for the same reasons set forth in Section V.D.1.d [of the '083 Patent Owner Response] regarding Brown**." POR, 70-71. This argument is deficient for the same reasons discussed above [for Brown/Brown-Wecker]."

SAMSUNG-1026 ('083 IPR), ¶86 (cited in Reply ('083 IPR), 27)

Shimada-Buchholz renders obvious a “fully configurable frame” (all IPRs)

FISH.

DEMONSTRATIVE EXHIBIT – NOT EVIDENCE

“Fully configurable frame”

A “fully configurable frame” is recited in the NIM construction.

“a **fully configurable frame**, with one or more controls, through which content is presented to the user.”

Petition (’083 IPR), 3-4 (citing SAMSUNG-1001 (’083 IPR) 5:41-44)

DEMONSTRATIVE EXHIBIT – NOT EVIDENCE

Shimada-Buchholz renders obvious a "fully configurable frame"

DoDots argues that Shimada's screen configuration data is not "fully configurable" because "Shimada's screens all have a similar and specific layout" and that this "indicat[es] that they are not fully configurable frames." POR, 74.

Greenspun Testimony
"**This is a circular argument with no supporting analysis**, and Dr. Selker's testimony simply repeats the POR. POR, 74; DODOTS-2010, ¶277. For this reason, the Patent Owner's argument should be given little weight. *Id*. Also, as discussed above [for Brown/Brown-Wecker], the Patent Owner's implicit construction of this feature requiring that a developer 'wholly define' the frame should be rejected."

SAMSUNG-1026 ('083 IPR), ¶87 (cited in Reply ('083 IPR), 27)

109

Shimada-Buchholz renders obvious “electronic storage having stored thereon a plurality of networked information monitor templates” (’083 IPR)

DEMONSTRATIVE EXHIBIT – NOT EVIDENCE

"Electronic storage having stored thereon a plurality of networked information monitor templates"

"Electronic storage having stored thereon a plurality of networked information monitor templates" is recited in claim 1 of the '083 patent.

1. A client device, the client device comprising:
electronic storage having stored thereon a plurality of networked information monitor templates defining a plurality of networked information monitors, the plurality of networked information monitor templates comprising a first networked information monitor template defining a first networked information monitor, wherein the first networked information monitor template comprises:

SAMSUNG-1001 ('083 IPR), claim 1 (cropped)

FISH.

DEMONSTRATIVE EXHIBIT – NOT EVIDENCE

Shimada-Buchholz renders obvious a "storing a plurality of NIM templates on a client device"

DoDots argues that "Buchholz [disclosing] storing a pack of templates at the client device does not teach a POSITA to store multiple alleged templates of Shimada," simply because "[a] POSITA would not combine Buchholz/Shimada." POR, 76-77.

Greenspun Testimony
"A POSITA would have combined Shimada and Buchholz for the reasons discussed above [in the Reply], and in the Petition. Petition, 62; *see above*, §VII. **DoDots' argument here turns entirely on their combination arguments and fails with them**. POR, 76-77."

SAMSUNG-1026 ('083 IPR), ¶88 (cited in Reply ('083 IPR), 27-28)

Shimada's URLs are instructions for the transmission and reception of content over a network from a web server ('407 IPR) and Shimada's URLs reference content elements ('545 IPR)

DEMONSTRATIVE EXHIBIT – NOT EVIDENCE

"transmission, over a network to a web server at a network location, of a content request …"

"transmission, over a network to a web server at a network location, of a content request for content to be displayed within the frame of the viewer graphical user interface defined by the networked information monitor template" and "reception, over the network from the web server at the network location, of content transmitted from the web server in response to the content request, the content being time-varying" is recited in claim 1 of the '407 patent.

transmission, over a network to a web server at a network location, of a content request for content to be displayed within the frame of the viewer graphical user interface defined by the networked information monitor template;

reception, over the network from the web server at the network location, of content transmitted from the web server in response to the content request, the content being time-varying;

SAMSUNG-1001 ('407 IPR), claim 1 (cropped)

DEMONSTRATIVE EXHIBIT – NOT EVIDENCE

"a first content element referencing a first network location"

"[A] first content element referencing a first network location" is recited in claim 1 of the '545 patent.

a definition of a first content element for the networked information monitor template, the definition of the first content element referencing a first network location from which the first content element for the networked information monitor template is served over the network;

SAMSUNG-1001 ('545 IPR), claim 1 (cropped)

DEMONSTRATIVE EXHIBIT – NOT EVIDENCE

Shimada-Buchholz renders these features obvious

DoDots argues that Shimada-Buchholz does not render obvious "transmission…of a content request for content…" and "reception…of content…in response to the content request, the content being time-varying" because "Shimada does not disclose any URLs in the screen configuration data," but rather "file names." POR, 69-71.

Greenspun Testimony

"As noted by the Board in the institution decision, referencing the analysis in the petition and Dr. Schmidt's declaration, "[t]his argument does not address … Dr. Schmidt's testimony that **Shimada's network could be the Internet or that the URL requests content over a network to a web server at a network location**. Institution Decision, 46-47; Petition, 68-69, 86, 96–98; SAMSUNG-1003 ¶¶ 22, 157, 162, 184, 207–209.

SAMSUNG-1029 ('407 IPR), ¶89 (cited in Reply ('407 IPR), 29)
SAMSUNG-1029 ('545 IPR), ¶87 (cited in Reply ('545 IPR), 29)

Patent Owner additionally argues that Shimada does not teach or suggest the transmission of a request for content over a network (e.g. limitation 1.3) or the reception of content from over the network (e.g. limitation 1.4) via content references in Shimada's HTML file because Shimada's HTML code examples are *relative* URLs that would retrieve locally stored information, and not information retrieved from a network. Prelim. Resp. 23–25 (citing Ex. 1008, Figs. 5, 6, 17). This argument does not address the Dr. Schmidt's testimony that Shimada's network could be the Internet or that the URL requests content over a network to a web server at a network location. Pet. 68, 69, 86, 96–98; Ex. 1003 ¶¶ 22, 157, 162, 184, 207–209.

Institution Decision ('407 IPR), 47
Institution Decision ('545 IPR), 67

Schmidt Testimony

"A POSITA also would have understood or found obvious that because Shimada describes '**world wide networks** and access to **world-wide information**' that the techniques of Shimada could be used to '**access content over a network**." SAMSUNG-1008, 1:34-36."

SAMSUNG-1003 ('407 IPR), ¶162 (cited in Petition ('407 IPR), 69)
SAMSUNG-1003 ('545 IPR), ¶148 (cited in Petition ('545 IPR), 68)

FISH.

116

Shimada-Buchholz renders claims 4 and 12 obvious (’083 IPR)

DEMONSTRATIVE EXHIBIT – NOT EVIDENCE

Claims 4 and 12 of the ’083 patent

4. The client device of claim **1**, wherein the plurality of networked information monitor templates further comprises a second networked information monitor template defining a second networked information monitor, wherein the second networked information monitor template comprises:

(1) a second content reference that comprises a second network location, which is different from the network location in the content reference of the first networked information monitor template, at which content for the second networked information monitor is accessible via the TCP/IP protocol; and

(2) a definition of a graphical user interface of the second networked information monitor that lacks controls for manually navigating a network, and that includes a second frame within which content received from the second network location can be displayed; and

(3) instructions configured (i) to cause the second networked information monitor to request content from the second network location in the second content reference via the TCP/IP protocol, and (ii) to cause the second networked information monitor to generate the graphical user interface of the second networked information monitor with the content received from the second network location via the TCP/IP protocol within the frame.

SAMSUNG-1001 (’083 IPR), claim 4

12. The method of claim **9**, wherein the plurality of networked information monitor templates further comprises a second networked information monitor template defining a second networked information monitor, wherein the second networked information monitor template comprises:

(1) a second content reference that comprises a second network location, which is different from the network location in the content reference of the first networked information monitor template, at which content for the second networked information monitor is accessible via the TCP/IP protocol; and

(2) a definition of a graphical user interface of the second networked information monitor that lacks controls for manually navigating a network, and that includes a second frame within which content received from the second network location can be displayed; and

(3) instructions configured (i) to cause the second networked information monitor to request content from the second network location in the second content reference via the TCP/IP protocol, and (ii) to cause the second networked information monitor to generate the graphical user interface of the second networked information monitor with the content received from the second network location via the TCP/IP protocol within the frame.

SAMSUNG-1001 (’083 IPR), claim 12

DEMONSTRATIVE EXHIBIT – NOT EVIDENCE

Shimada-Buchholz renders claims 4 and 12 obvious

DoDots argues that Shimada-Buchholz fails to render obvious a second NIM template because Buchholz discloses "[t]he templates of the pack can be related or unrelated in form and functionality." POR, 78-79 (emphasis in original).

Greenspun Testimony
"The Patent Owner has **simply emphasized the portion of the reference that suits their argument and ignored portions that don't** (passing over "related"), without providing any compelling analysis of why the combination would be so limited. *Id*. Dr. Selker's analysis simply repeats that of the POR. DODOTS-2010, ¶¶287-290."

SAMSUNG-1026 ('083 IPR), ¶89 (cited in Reply ('083 IPR), 28)

Shimada-Buchholz renders claims 4 and 12 obvious

DoDots argues that the Shimada-Buchholz combination does not render obvious "a second content reference" and "a second network location" because the "[t]he Petition does not identify what the second content reference is or what the second network location is." POR, 79.

Greenspun Testimony
"Shimada describes "world wide networks and access to world-wide information," which **clearly indicates that its envisioned content is not from a single source**. Petition, 74-75. There are also multiple examples of content in Buchholz, which describes "up-to-date information on stocks, sports, [and] news," all conceivably retrieved from different network locations. SAMSUNG-1009, 1:13-19."

SAMSUNG-1026 ('083 IPR), ¶90 (cited in Reply ('083 IPR), 28)

Shimada

Such a multimedia network system has spread in world-wide networks and access to world-wide information can be acquired by making access to the servers in the world.

SAMSUNG-1008, 1:34-36 (cited in '083 Petition ('083 IPR), 74)

Buchholz

Information services are becoming increasingly popular in the wireless service market as they can provide subscribers with up-to-date information on stocks, sports, news, and the like. To increase the value of these services it is helpful to customize them for each individual subscriber. Customization is not desirable, however, if it requires a large increase in the amount of traffic traveling over the air.

SAMSUNG-1009, 1:13-19 (cited in '083 Petition ('083 IPR), 74)

120

Shimada-Buchholz renders dependent claims obvious (’407 and ’545 IPRs)

DEMONSTRATIVE EXHIBIT – NOT EVIDENCE

Shimada-Buchholz renders the dependent claims obvious

Greenspun Testimony
"The Patent Owner's arguments for the dependent claims of the '407 Patent in the Shimada-Buchholz ground depend entirely on their flawed arguments for the independent claim. POR. 73; *see above* §§VIII.A-B."

SAMSUNG-1029 ('407 IPR), ¶91 (cited in Reply ('407 IPR), 30)
SAMSUNG-1029 ('545 IPR), ¶91 (cited in Reply ('545 IPR), 31)

A POSITA would have combined Shimada, Buchholz, and Darnell (’545 IPR)

DEMONSTRATIVE EXHIBIT – NOT EVIDENCE

Darnell (*HTML Unleashed*)

SAMSUNG-1011, Cover

SAMSUNG-1011 ('545 IPR), Cover (cited in Petition ('545 IPR), 95)

Schmidt Testimony
"Darnell describes that it teaches 'an introduction into the basics of HTML, including basic page structure and all of the tags needed to build the page.' [SAMSUNG-1011], xxxvii. Darnell describes itself as 'a comprehensive resource for HTML 3.2' and that it includes information on 'tables, frames, [and] design.' *Id*."

SAMSUNG-1003 ('545 IPR), ¶¶192 (cited in Petition ('545 IPR), 95)

A POSITA would have combined Shimada, Buchholz, and Darnell

The petition established multiple reasons why a POSITA would have combined Shimada, Buchholz, and Darnell and expected success in doing so.

Schmidt Testimony
"A POSITA would have recognized or found obvious that Darnell includes both basic and advanced methods for utilizing HTML, **and that these methods could be used to improve the HTML screen configuration data described in Shimada**. Additionally, given that a POSITA would have had "a bachelor's degree in computer science, computer engineering, electrical engineering, or a related field," **it is likely that a POSITA would have encountered an academic HTML reference, similar to Darnell, in their formal education**. See paragraph 192, above. Thus, a POSITA would have recognized that the techniques of these references were complementary, and each would enhance the abilities of the other. Moreover, **a POSITA would have been motivated to combine Darnell with the Shimada-Buchholz combination to increase usability, improve GUI visual aesthetics, [and] implement additional HTML functionality.**"

SAMSUNG-1003 ('545 IPR), ¶¶194-195 (cited in Petition ('545 IPR), 96)

A POSITA would have combined Shimada, Buchholz, and Darnell

DoDots' arguments for these claims are entirely based on the combination of Shimada, Buchholz, and Darnell. POR, 71-72. DoDots argues that Darnell is "directed solely towards HTML" while "Buchholz explicitly states that it does not use HTML, and Shimada's disclosures [are not] a valid HTML document." Id.

Greenspun Testimony
"As discussed above, the Patent Owner has failed to prove any alleged disparity between the HTML teachings of Darnell and the 'similar to HTML' teachings of Buchholz. *See above*, §VII.B. The Patent Owner completely **fails to explain how an HTML academic textbook is 'wholly inapposite' to what is very clearly an HTML-based combination**. POR, 71-72."

SAMSUNG-1029 ('545 IPR), ¶89 (cited in Reply ('545 IPR), 29-30)

Greenspun Testimony
"The Patent Owner then argues that the arguments in the petition for claim 5 are 'actually from … Petty.' POR, 72. This is simply not correct, and as mentioned in the petition, **Darnell devotes an entire chapter to the use of XML**. Petition, 96-98. Petitioner's use of Petty was simply to corroborate that a parser would have been needed to 'parse' an XML document – a teaching directly from Darnell. Petition, 96-98; SAMSUNG-1011, 783; SAMSUNG-1003, ¶¶192-201."

SAMSUNG-1029 ('545 IPR), ¶89 (cited in Reply ('545 IPR), 29-30)

Claims 5, 8, and 12 of the ’545 patent

5. The method of claim **1**, wherein the networked information monitor template includes instructions in extensible markup language (XML) format, and further wherein the method further comprises parsing the definition of the viewer graphical user interface.

SAMSUNG-1001 (’545 IPR), claim 5

8. The method of claim **6**, wherein presenting the received the first content element in the viewer graphical user interface defined by the networked information monitor template comprises presenting the received the first content element at least in part within the image.

SAMSUNG-1001 (’545 IPR), claim 8

12. The method of claim **1**, further comprising causing the networked information monitor to communicate with another networked information monitor.

SAMSUNG-1001 (’545 IPR), claim 12

DEMONSTRATIVE EXHIBIT – NOT EVIDENCE

A POSITA would have combined Shimada, Buchholz, and Krishna (’545 IPR)

FISH.

DEMONSTRATIVE EXHIBIT – NOT EVIDENCE

Krishna (US 6,055,522)

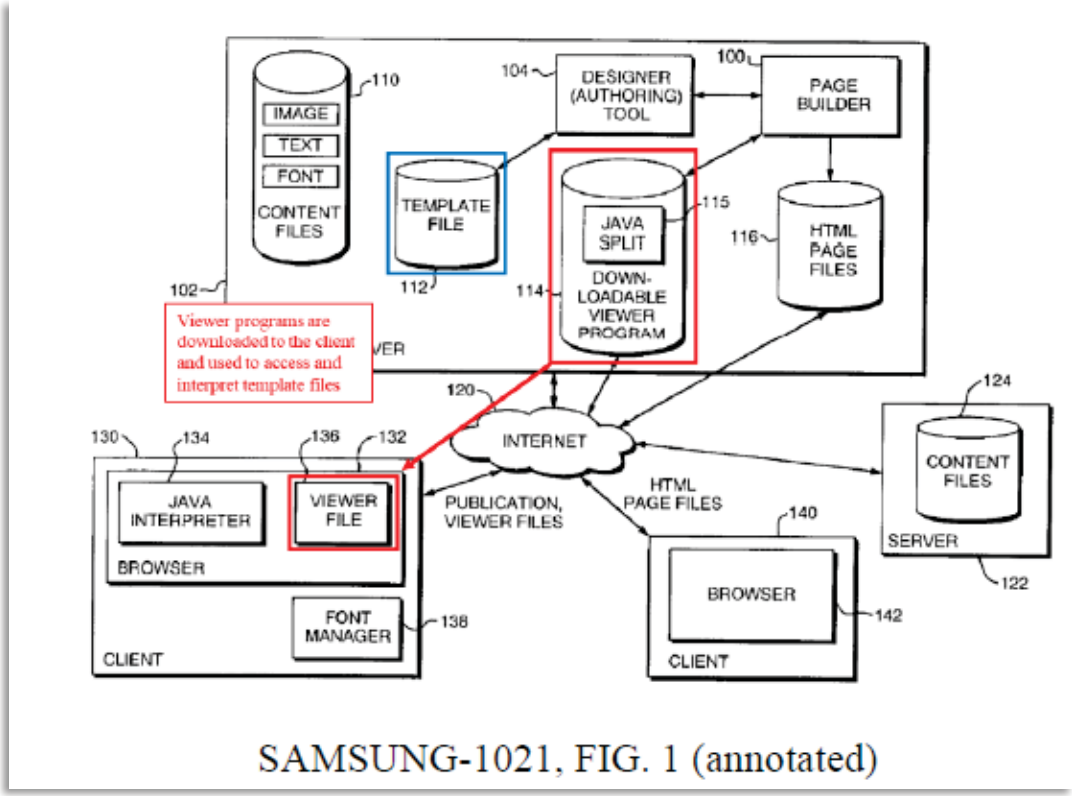

SAMSUNG-1021 ('545 IPR), FIG. 1 (cited in Petition ('545 IPR), 100)

Krishna "provides a capability for producing dynamic content publications such as Web pages while eliminating the need to download Specialized Viewer applets or otherwise to make use of modified or programming-enabled browser programs."

SAMSUNG-1021 ('545 IPR), Abstract (cited in Petition ('545 IPR), 99)

A POSITA would have combined Shimada, Buchholz, and Krishna

The petition established multiple reasons why a POSITA would have combined Shimada, Buchholz, and Krishna and expected success in doing so.

Schmidt Testimony
"A POSITA would have recognized or found obvious that Krishna's methods of 'producing dynamic content publications' could be implemented in the Shimada-Buchholz combination **as all three references describe the use of HTML**. SAMSUNG-1008, 6:59-62; SAMSUNG-1009, 5:9-13; SAMSUNG-1021, Abstract. Additionally, because Krishna 'eliminat[es] the need to download specialized' Viewer applets or otherwise to make use of modified or programming-enabled browser programs' **a POSITA would have recognized or found obvious that this is complementary to the objective of Shimada and Buchholz to mitigate long download times in networks with "small network transmission capacity.'** SAMSUNG-1008, 1:40-44; SAMSUNG-1009, 1:26-37; SAMSUNG-1021, Abstract."

SAMSUNG-1003 ('545 IPR), ¶203 (cited in Petition ('545 IPR), 100)

A POSITA would have combined Shimada, Buchholz, and Krishna

DoDots' arguments for these claims are entirely based on the combination of Shimada, Buchholz, and Krishna. POR, 72-73. DoDots argues that "Krishna is concerned with the conversion of more complex webpages into HTML" and "[t]his is not what Shimada and Buchholz are directed towards." Id.

Greenspun Testimony
"This argument is flawed because assumes that references must have the exact same purpose to be combined. POR, 45-47. **This is not what is required for obviousness**. Petition, 100-101 ('Krishna's methods of 'producing dynamic content publications' could be implemented in the Shimada-Buchholz combination'). This is nothing more than the application of known techniques (use of a 'viewer program' to interpret content in a template file) to a known structure (Shimada-Buchholz's templates) to yield predictable results (a viewer program application that would parse instructions in the template file), and **the Patent Owner fails to explain what is not 'predictable' about this combination**. Petition, 99-101; POR, 72-73; SAMSUNG-1003, ¶¶201-204."

SAMSUNG-1029 ('545 IPR), ¶90 (cited in Reply ('545 IPR), 30)

Claims 5-6 and 17-18 of the ’407 patent

5. The client computing device of claim **2**, wherein the one or more computer program modules and the networked information monitor template are configured such that modifying the feature of the viewer graphical user interface comprises adjusting a size of the frame of the viewer graphical user interface.

6. The client computing device of claim **2**, wherein the one or more computer program modules and the networked information monitor template are configured such that modifying the feature of the viewer graphical user interface comprises changing a color of a frame border or background of the viewer graphical user interface.

SAMSUNG-1001 (’407 IPR), claims 5-6

17. The method of claim **14**, wherein modifying the feature of the viewer graphical user interface comprises adjusting a size of the frame of the viewer graphical user interface.

18. The method of claim **14**, wherein modifying the feature of the viewer graphical user interface comprises changing a color of a frame border or background of the viewer graphical user interface.

SAMSUNG-1001 (’407 IPR), claims 17-18

DEMONSTRATIVE EXHIBIT – NOT EVIDENCE

Claims 5, 11, and 16-21 of the ’545 patent

5. The method of claim **1**, wherein the networked information monitor template includes instructions in extensible markup language (XML) format, and further wherein the method further comprises parsing the definition of the viewer graphical user interface.

SAMSUNG-1001 (’545 IPR), claim 5

11. The method of claim **1**, further comprising:

executing a client parser application that is separate from the networked information monitor template, the client parser application being configured to present the viewer graphical user interface defined by the networked information monitor template on the client computing device, to generate the request for the content that is transmitted to the first network location referenced by the definition of the first content element for the networked information monitor template, and to present the first content element received from the first network location within the viewer graphical user interface defined by the networked information monitor template.

SAMSUNG-1001 (’545 IPR), claim 11

16. A computer-implemented method of obtaining and displaying content obtained over a network to a user on a client computing device, the method being implemented in the client computing device, the client computing device including electronic storage, a display, and one or more processors configured to execute one or more computer program modules, the method comprising:

executing on the client computing device client parser, wherein the execution of the client parser results in the client computing device:

transmitting over the network a first content request to a first network location referenced by a definition of a first content element in a networked information monitor template that is readable by the client parser;

receiving, over the network, the first content element transmitted responsive to the first content request;

presenting a viewer graphical user interface defined by the networked information monitor template on the display of the client computing device and wherein the viewer graphical user interface defined by the networked information monitor template is presented separate from and outside of any other graphical user interface that includes user controls for specifying the first network location from which the first content element for the networked information monitor is served over the network; and

presenting the received content element within the viewer graphical user interface defined by the networked information monitor template, wherein the definition of the viewer graphical user interface and/or the first content element define all controls for enabling a user to interact with the first content element through the viewer graphical user interface.

SAMSUNG-1001 (’545 IPR), claim 16

DEMONSTRATIVE EXHIBIT – NOT EVIDENCE

Claims 5, 11-12, and 16-21 of the ’545 patent

17. The method of claim **16**, wherein execution of the client parser further results in the client computing device determining that the first element content modifies the networked information monitor template and responsive to such determination, modifying the networked information monitor template prior to the step of presenting the graphical user interface.

18. The method of claim **16**, further comprising presenting an icon representing networked information monitor associated with the networked information monitor template on the display of the client computing device, and wherein execution of the client parser to perform one or more of the transmitting operation, the presenting the viewer graphical user interface operation, or presenting the first content element operation is responsive to reception of selection by a user of the icon.

19. The method of claim **16**, further comprising invoking the client parser an initiating one or more of the transmitting operation, the presenting the viewer graphical user interface operation, or presenting the first content element operation automatically during a start-up process of the client computing device.

SAMSUNG-1001 (’545 IPR), claims 17-19

20. The method of claim **19**, wherein execution on the client computing device of the client parser further results in the client computing device:

transmitting over the network a second content request to a second network location referenced by a definition of a second content element in a second networked information monitor template that is readable by the client parser;

receiving the second content element transmitted responsive to the second content request;

presenting a second viewer graphical user interface defined by the second networked information monitor template on the display of the client computing device, wherein the second viewer graphical user interface lacks user controls, wherein the definition of the second viewer graphical user interface and/or the second content element define all controls for enabling a user to interact with the second content element through the second viewer graphical user interface; and

presenting the second content element within the viewer second graphical user interface,

wherein execution of the client parser to perform the transmitting the second content request, the presenting the second viewer graphical user interface operation, and the presenting the second content element is responsive to reception of a selection to initiate a second networked information monitor associated with the second networked information monitor template.

21. The method of claim **16**, wherein the network is the internet.

SAMSUNG-1001 (’545 IPR), claims 20-21

DEMONSTRATIVE EXHIBIT – NOT EVIDENCE

DoDots' Alleged Secondary Considerations Fail to Outweigh the Strong Evidence of Obviousness

(all IPRs)

FISH.

DEMONSTRATIVE EXHIBIT – NOT EVIDENCE

DoDots relies on a presumption of nexus, which requires the claims to be coextensive with the DoDots product

Selker Testimony

Q. "And I just want to make sure that my understanding is correct that your basis for believing there's a nexus is that all of the claim elements for the '083 patent are found in the DoDots technology right?"

A. "That - I believe that's true."

SAMSUNG-1027 ('083 IPR), 134:4-21 (cited in Reply ('083 IPR), 30)

'083 Patent Owner Response

"Because each claim element is present in the commercialized Dots, there is a concrete nexus to all the patent claims. DODOTS-2010, ¶293-299. The substantial impact this technology had on the direction of the industry should be considered when assessing the novelty of the inventions. Id., ¶38; DODOTS-2010, ¶299."

'Patent Owner Response ('083 IPR), 82

'083 Petitioner Reply

"DoDots' analysis on nexus is essentially limited to a single conclusory sentence: "Because each claim element is present in the commercialized Dots, there is a concrete nexus to all the patent claims." POR, 82. Selker provided a similar conclusory analysis in reiterating that "all of the claim elements for the [challenged patent] are found in the DoDots technology." SAMSUNG-1027, 133:4-21. **Having all claimed features in a product, however, is insufficient to establish a presumption of nexus. The law requires coextensiveness**."

Reply ('083 IPR), 30

DEMONSTRATIVE EXHIBIT – NOT EVIDENCE

The DoDots product is not coextensive to the claims of the challenged patents

DoDots fails to even consider unclaimed features in the DoDots technology/product in evaluating nexus

'083 Petitioner Reply

"In fact, John and George Kembel, the co-founders/inventors of DoDots, testified about unclaimed features of DoDots technology that were critical to its alleged success. … **Some of these allegedly critical elements of DoDots technology appear to be claimed in other patents**, including U.S. 9,438,467 (SAMSUNG-1037) and U.S. 8,510,306 (SAMSUNG-1038). *See, e.g.*, SAMSUNG-1034, Claim 1; SAMSUNG-1035, Claim 16."

Reply ('083 IPR), 30-31

John Kembel Testimony

Q. "What is the HomeDot?"

A. "The HomeDot was the thing that enabled - think of it as like the face of the thin client when you Dot-enabled your computer. It's what enabled you to open Dots, close Dots, and share Dots. Things like that. … But if an end user had not collected a Dot before, **they needed to Dot-enable their computer.** And that happened the first time they collected their first Dot."

SAMSUNG-1028 ('083 IPR), 29:16-30:17 (cited in Reply ('083 IPR), 30-31)

George Kembel Testimony

Q. "Well, let me understand how DoDots' patent portfolio worked. You had many patents; is that fair?"

A. "I - yes, I understand there are a number of patents."

Q. "There were more patents beyond the three that are at issue in this proceeding?"

A. "**There are more than three patents that I understand**."

SAMSUNG-1029 ('083 IPR), 45:16-24 (cited in Reply ('083 IPR), 31)

DEMONSTRATIVE EXHIBIT – NOT EVIDENCE

The DoDots product is not coextensive to the claims of the challenged patents

DoDots fails to consider features in other DoDots patents that were included in DoDots product

'083 Petitioner Reply
"In fact, John and George Kembel, the co-founders/inventors of DoDots, testified about unclaimed features of DoDots technology that were critical to its alleged success. … **Some of these allegedly critical elements of DoDots technology appear to be claimed in other patents**, including U.S. 9,438,467 (SAMSUNG-1037) and U.S. 8,510,306 (SAMSUNG-1038). *See, e.g.*, SAMSUNG-1034, Claim 1; SAMSUNG-1035, Claim 16."

Reply ('083 IPR), 30-31

1. A method of managing a networked information monitor for accessing and presenting Internet content, the networked information monitor being a part of a home networked information monitor containing a plurality of networked information monitors, an instance of said networked information monitor being based on a networked information monitor template, the network information

SAMSUNG-1037, Claim 1 (cited in Reply ('083 IPR), 30-31)

16. The server of claim **15**, wherein said identifier may be shared between users of a plurality of client computing devices such that requests for the networked information monitor template are receivable by the server from individual ones of the client computing devices over the network.

SAMSUNG-1038, Claim 16 (cited in Reply ('083 IPR), 30-31)

DEMONSTRATIVE EXHIBIT – NOT EVIDENCE

DoDots' industry praise is from DoDots itself, and its affiliates

'083 Petitioner Reply

"As to industry praise, DoDots leads with evidence from a 'Stanford' professor that served on the Kembel's 'board of advisors,' as well as praise offered by Softbank after Softbank agreed to fund DoDots. DODOTS-2031, 1; DODOTS-2032, 1. **It is hardly surprising that DoDots would be praised by its own 'board of advisors' and its investor**."

Reply ('083 IPR), 33

George A. Kembel

From: Tom Kosnik [kosnik@eland.Stanford.EDU]
Sent: Tuesday, June 15, 1999 12:35 PM
To: awinblad@humwin.com; mgorenberg@humwin.com; Elizabeth Armstrong
Cc: George A. Kembel; Tom Kosnik (E-mail); John Kembel (E-mail)
Subject: Re: Periphio (next steps)

Importance: High

Ann, Mark, and Elizabeth,

I am more excited about the Periphio concept than any I have seen since Netscape browser first gave us graphical access to the World Wide Web. In fact, MORE excited. Their concept creates enormous leverage for anyone who multitasks on computer based tasks in a real-time business, as well as anyone who channel surfs!

In addition, the founders are George and John Kembel - twin brothers whose creativity is legendary around Stanford, and who are ideal anchors around which to build a management team.

Although the Kembels have an executive summary of a business plan, I think having them demonstrate the Periphio concept on computer, and meet you in person, is by far the most efficient way for Hummer Winblad to grasp the concept and size up the co-founders.

When they approached me last Friday to go on their board of advisors, they had already been approached by two VCs, so a timely first meeting is an issue.

Ex-2031 ('083 IPR), 1 (cited in Reply ('083 IPR), 33)

SOFTBANK Venture Capital's Technology Fund Invests in DoDots , Inc.

10/13/1999
Business Wire
(Copyright (c) 1999, Business Wire)

MOUNTAIN VIEW, Calif.--(BUSINESS WIRE)--Oct. 13, 1999--SOFTBANK Venture Capital, which manages venture capital funds focused primarily on early-stage Internet companies, today announced it has made a first-round investment in **DoDots** , Inc.

Heidi Roizen, managing director for the fund, will join the company's board of directors.

Ex-2032 ('083 IPR), 1 (cited in Reply ('083 IPR), 33)

DEMONSTRATIVE EXHIBIT – NOT EVIDENCE

Dr. Selker praises Microsoft, not DoDots

'083 Petitioner Reply

"DoDot's sole 'independent' expert, [Dr.] Selker, based his entire secondary considerations analysis on declarations provided by the cofounder/ inventor duo. DODOTS-2010, 292; SAMSUNG-1027, 134:13-18. But when pressed during deposition for related testimony based on his own personal knowledge, **[Dr.] Selker painted a very different picture of the actual circumstances surrounding DoDots."**

Reply ('083 IPR), 31-32

Selker Testimony

Q. "Let me ask you, stepping aside, is the notion of an active desktop unique to Brown, or is that something that was known in the industry?"

A. "There was something very special about what they were trying to do … their goal was to kill browsers. I mean Bill Gates said he was hoping to kill every browser. So this was an idea of, hey, our desktop's such a great thing. Why don't we absorb everything that's being done today in the desktop."

SAMSUNG-1027 ('083 IPR) 117:17-118:7 (cited in Reply ('083 IPR), 30)

Selker Testimony

Q. "In your time - in your career, before working on this case, had you worked with DoDots before at all, the DoDots entity that was around in the early 2000s?"

A. "No. I was not actually aware of it until this case."

SAMSUNG-1027 63:19-25 (cited in Reply ('083 IPR), 32)

DEMONSTRATIVE EXHIBIT – NOT EVIDENCE

No evidence of DoDots' commercial success

'083 Petitioner Reply

"As to commercial success, DoDots "must be armed with evidence of market share, growth in market share, and replacement of prior sales by others." Brand Mgmt, Inc. v. Menard, Inc., No. 97-1329, 1998 WL 15241 at *11 (Fed. Cir. 1998). But DoDots offers no evidence of market share, much less any sales. **This is not surprising, as DoDots attempted to demonstrate commercial success in a prior IPR and was soundly rebutted**."

Reply ('083 IPR), 33-35

'083 Petitioner Reply

Tellingly, when asked during deposition whether DoDots was ever profitable, George Kembel—the **CEO and co-founder of DoDots**—refused to provide an answer. SAMSUNG-1029, 50:5-53:9.

Reply ('083 IPR), 33-35

George Kembel Testimony

Q. "I understand profit might not have been your focus. My question is: Did you turn a profit? Yes or no?"

A. "[I]t was like 25 years ago. And I would only be guessing. It was not included in my declaration because I didn't pull the financials."

SAMSUNG-1029 ('083 IPR), 53:24-54:4 (cited in Reply ('083 IPR), 35)

DEMONSTRATIVE EXHIBIT – NOT EVIDENCE

No evidence of DoDots' commercial success

'083 Petitioner Reply

"As to commercial success, DoDots "must be armed with evidence of market share, growth in market share, and replacement of prior sales by others." Brand Mgmt, Inc. v. Menard, Inc., No. 97-1329, 1998 WL 15241 at *11 (Fed. Cir. 1998). But DoDots offers no evidence of market share, much less any sales. **This is not surprising, as DoDots attempted to demonstrate commercial success in a prior IPR and was soundly rebutted**."

Reply ('083 IPR), 33-35

Rakesh Testimony – IPR2019-01278

Q. "Is that your understanding that DoDots were free? Strike that. Is it your understanding that Dots were free of charge?"

A. "My understanding is that the Dots that were identified there that were available at the time were free of charge."

…

Q. "And then if we move down what were the total operating expenses of DoDots

A. "As I'm reading it they had 1.1 million in expenses. And then they had an additional 46,000 in interest expense so the total expenses and their net loss is about 1.1, over $1.1 million."

SAMSUNG-1042 ('083 IPR) 24:13-25, 52:21-25, 1-5 (cited in Reply ('083 IPR), 34-35)
(court reporter page 21:13-25; 44:21-45:5 cited in 5/31 Reply, 34-35)

DoDots, Inc

Income statement
Month of March 2000

	actual	forecast	variance	
	$'000	$'000	$'000	%
Revenue	-	1	(1)	-100%
Cost of revenue	-	-	-	n/a
Gross profit	-	1	(1)	-100%
Operating expenses:				
Product development	(602)	(402)	(200)	50%
Sales and marketing	(268)	(439)	171	-39%
General and administrative	(226)	(269)	43	-16%
Total operating expenses	(1,097)	(1,110)	13	-1%
Operating loss	(1,097)	(1,109)	12	-1%
Interest income	1	8	(7)	-88%
Interest expense	(23)	(46)	23	-50%
Net loss	(1,119)	(1,147)	28	-2%

The overall loss is near budgeted levels. Product development expenses are larger than planned primarily as a result of call center start up costs and an increase in allocated depreciation expenses.

Sales and marketing expenses are lower than forecast primarily as a result of headcount being less less than planned. General and administrative expenses are below forecast largely due to product development bearing a larger proportion of depreciation expenses than originally planned.

NOT COPY

SAMSUNG-1042 ('083 IPR) Exhibit C (cited in Reply ('083 IPR), 34-35)

DEMONSTRATIVE EXHIBIT – NOT EVIDENCE

Many competitors recognized and solved the same issues as DoDots, supporting obviousness

'083 Petitioner Reply

"In fact, DoDots' evidence suggests **prior/contemporaneous recognition of the same problem** by other companies (including Microsoft) that solved the problem at least as well as DoDots."

Reply ('083 IPR), 32-33

BY DANIEL LYONS

WHEN MOST PEOPLE WERE just discovering the World Wide Web five years ago, Roy Stringer was already discovering its shortcomings. Stringer was a consultant in a computer lab at John Moores University in Liverpool, England at the time. His main beef was with the browser, that supposedly nifty little piece of point-and-click software used by 240 million people worldwide to surf the Web.

He has been trying to build a better one ever since. Stringer figures the basic problem is that typical Web sites arrange information in a hierarchical structure. You spot an underlined "link," click on it and go down one step, then another, then another—then realize you're in the wrong place. So you back up, back up, back up, then start all over again on a different ladder.

A better approach, Stringer reasons, would be to arrange a Web site's information as points on a globe. On a globe with 12 points, each point would be no more than three clicks away from any other. And you could see the whole thing by rotating the globe on-screen.

He called this structure a "navihedron," and in 1997 his operation was spun out of John Moores University into Amaze Ltd., a 100-employee Web design shop with offices on the banks of the Mersey. Last year Stringer published his concept on the Web, along with some prototypes, inviting other Web designers to try it.

Today about 2,000 navihedrons exist, visible at www.navihedra.com, but most are experimental. Many of Amaze's clients shun the navihedron in favor of traditional site design. Stringer, Amaze's "chief hypermedia architect," admits it will be a struggle to get the world to scrap the old browser. "We have 20,000 years of hierarchy in our systems. It goes back to kings and queens. Those sorts of hierarchical mechanisms in society are very strong in our psyche," he says.

Stringer's experiment points up a

says Ramana Rao, chief technology officer.

Inxight was spun off in 1997 to develop visualization tools for navigating the Web. One technology, Hyperbolic Tree, lets companies build a map of

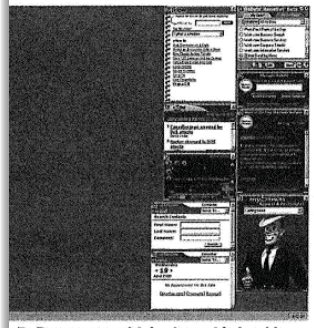

: DoDots runs multiple sites, side by side.

their site to show different areas and the links among them. A person trying to research a product can spin the map around until that part of the site shows up—and then click on that spot. So far 70 sites use Hyperbolic Tree, including the *Wall Street Journal*'s.

Microsoft's 3-D effort, TaskGallery, is experimental and will require a lot more bandwidth than most users have today. "We all know there's a lot more that can be done," says Daniel Robbins, a 3-D interface designer at Microsoft.

For now, some companies are trying to make the best of a bad situation by creating Web-based applications that hide the browser. Unext.com makes online educational software that runs on a browser; once the program is running, the browser disappears. "We need to just forget the browser. The browser has set

Card and his team at PARC are working on an alternative called Web Forager, which lets you gather dozens of Web pages into a "book" and store these live links on a "shelf." Take down a book on, say, car-buying, and you can flip through the pages without waiting for each page to load. And you can look at several pages at the same time, in a 3-D "work space."

Another PARC-related effort, pursued by Xerox spinoff Inxight Software in Palo Alto, aims to let users view a picture of an entire Web site before diving in. "By using graphics you can see the whole territory first and then realize which portion of the site you want to visit, to get to the right area more quickly,"

Another effort, ZigZag, from respected designer Theodor Nelson, seeks to create an entirely new structure for programming, graphics and data storage. He envisions a "floating world" in which the user "flies" through 3-D space as objects morph and pass around him. The Web's early designers erred by dumbing it down to make it work, he says. "They got a quick kill, and now we're paying for it," he gripes.

Ex-2023 ('083 IPR), 1-5 (cited in Reply ('083 IPR), 32-33)

DEMONSTRATIVE EXHIBIT – NOT EVIDENCE

DoDots' support for long-felt need describes DoDots itself

'083 Petitioner Reply
"As to long-felt need, DoDots cites just three articles. DODOTS-2022-2024. But each of these articles was published in 2000—after the Critical Date—and each discusses DoDots. **Evidence that comes after the Critical Date and references the alleged invention does not demonstrate a long-felt need for the invention and failure by others**."

Reply ('083 IPR), 32

Ex-2022 ('083 IPR), 1 (cited in Reply ('083 IPR), 32)

That's what makes the ideas of DoDots, a Palo Alto startup, so interesting. The company unveiled the prototype of a platform that online companies can use to develop Internet applications that don't feel like Web pages but like handy virtual appliances. DoDots hopes that its partners will begin distributing the free applications, or "dots," in March.

DoDots was started by 27-year-old twin brothers John and George Kembel, both graduates of a Stanford University program in product design.

Ex-2022 ('083 IPR), 1 (cited in Reply ('083 IPR), 32)

DEMONSTRATIVE EXHIBIT – NOT EVIDENCE

DoDots' support for long-felt need describes DoDots itself

'083 Petitioner Reply
"As to long-felt need, DoDots cites just three articles. DODOTS-2022-2024. But each of these articles was published in 2000—after the Critical Date—and each discusses DoDots. **Evidence that comes after the Critical Date and references the alleged invention does not demonstrate a long-felt need for the invention and failure by others**."

Reply ('083 IPR), 32

Ex-2023 ('083 IPR), 1 (cited in Reply ('083 IPR), 32)

Eliminating the browser is exactly what George and John Kembel, twins with engineering and design degrees from Stanford, have managed to do. Their shop, DoDots Inc., sells software that lets you view a handful of miniature Web pages, each one in its own little window on the screen, without having to run a browser. Some 20 companies now make their Web information available in this format.

Ex-2023 ('083 IPR), 5 (cited in Reply ('083 IPR), 32)

DEMONSTRATIVE EXHIBIT – NOT EVIDENCE

DoDots' support for long-felt need describes DoDots itself

'083 Petitioner Reply

"As to long-felt need, DoDots cites just three articles. DODOTS-2022-2024. But each of these articles was published in 2000—after the Critical Date—and each discusses DoDots. **Evidence that comes after the Critical Date and references the alleged invention does not demonstrate a long-felt need for the invention and failure by others**."

Reply ('083 IPR), 32

Several start-ups - DoDots, iWare, NetSanity, Snippets.com and Winfire among them - narrow the distance between you and Net content you crave in a hurry. Some of these companies have unleashed browser companions, or toolbars that run along the edge of your Netscape or Internet Explorer browser. Others offer approaches that work completely outside the browser.

- Joel Smith
- Elizabeth Weise
- John Yaukey

Ex-2024 ('083 IPR), 4 (cited in Reply ('083 IPR), 1)

Snippets (3, www.snippets.com)
Pro: Clever toolbar conveys a lot of information before you click on anything.
Con: No way to drag icons off the toolbar. A little buggy.

Edward C. Baig covers technology for USA TODAY.

Copyright © 2000, USA TODAY. All rights reserved.

Quick checkup: CLICK HERE! HOW HEALTHY ARE YOU? USA TODAY .com

Front page, News, Sports, Money, Life, Weather, Marketplace

© Copyright 2000 USA TODAY, a division of Gannett Co. Inc.

Ex-2024 ('083 IPR), 4 (cited in Reply ('083 IPR), 32)

DEMONSTRATIVE EXHIBIT – NOT EVIDENCE