(12) INTERNATIONAL APPLICATION PUBLISHED UNDER THE PATENT COOPERATION TREATY (PCT)

(19) World Intellectual Property Organization
International Bureau

(43) International Publication Date
28 September 2017 (28.09.2017)

WIPO | PCT

(10) International Publication Number
WO 2017/165532 A1

(51) International Patent Classification:
G04B 37/14 (2006.01) *A61B 5/04* (2006.01)
G04B 47/06 (2006.01) *A61B 5/024* (2006.01)
G04G 17/04 (2006.01) *A61B 5/08* (2006.01)
G04G 21/02 (2010.01)

(21) International Application Number:
PCT/US2017/023608

(22) International Filing Date:
22 March 2017 (22.03.2017)

(25) Filing Language: English

(26) Publication Language: English

(30) Priority Data:
62/311,674 22 March 2016 (22.03.2016) US

(71) Applicant: **NEUMITRA INC.** [US/US]; 32 Anderson Street #3, Boston, MA 02114 (US).

(72) Inventors: **PAULKE, Gabor**; 396 Hilltop Rd, Littleton, NH 03561 (US). **GOLDBERG, Robert, F.**; 32 Anderson Street #3, Boston, MA 02114 (US). **WOOLF, Sam**; 114 Western Ave #5R, Cambridge, MA 02139 (US).

(74) Agent: **CHEUNG HUGHES, Ling**; Wolf, Greenfield & Sacks, P.C., 600 Atlantic Avenue, Boston, MA 02210-2206 (US).

(81) Designated States *(unless otherwise indicated, for every kind of national protection available)*: AE, AG, AL, AM, AO, AT, AU, AZ, BA, BB, BG, BH, BN, BR, BW, BY, BZ, CA, CH, CL, CN, CO, CR, CU, CZ, DE, DJ, DK, DM, DO, DZ, EC, EE, EG, ES, FI, GB, GD, GE, GH, GM, GT, HN, HR, HU, ID, IL, IN, IR, IS, JP, KE, KG, KH, KN, KP, KR, KW, KZ, LA, LC, LK, LR, LS, LU, LY, MA, MD, ME, MG, MK, MN, MW, MX, MY, MZ, NA, NG, NI, NO, NZ, OM, PA, PE, PG, PH, PL, PT, QA, RO, RS, RU, RW, SA, SC, SD, SE, SG, SK, SL, SM, ST, SV, SY, TH, TJ, TM, TN, TR, TT, TZ, UA, UG, US, UZ, VC, VN, ZA, ZM, ZW.

(84) Designated States *(unless otherwise indicated, for every kind of regional protection available)*: ARIPO (BW, GH, GM, KE, LR, LS, MW, MZ, NA, RW, SD, SL, ST, SZ, TZ, UG, ZM, ZW), Eurasian (AM, AZ, BY, KG, KZ, RU, TJ, TM), European (AL, AT, BE, BG, CH, CY, CZ, DE, DK, EE, ES, FI, FR, GB, GR, HR, HU, IE, IS, IT, LT, LU, LV, MC, MK, MT, NL, NO, PL, PT, RO, RS, SE, SI, SK, SM, TR), OAPI (BF, BJ, CF, CG, CI, CM, GA, GN, GQ, GW, KM, ML, MR, NE, SN, TD, TG).

Published:

— *with international search report (Art. 21(3))*

— *before the expiration of the time limit for amending the claims and to be republished in the event of receipt of amendments (Rule 48.2(h))*

(54) Title: BIOSENSOR MODULE FOR BAND ATTACHMENT

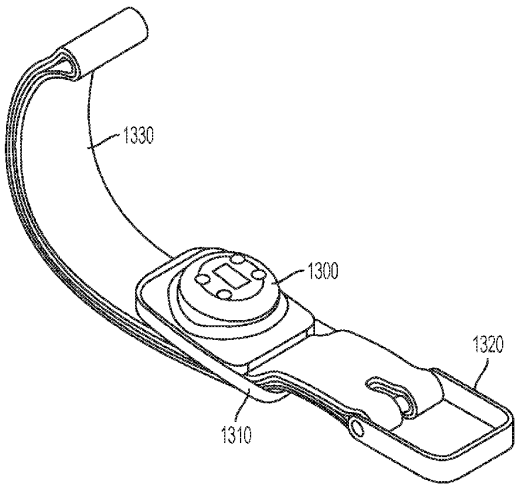

FIG. 13A

(57) Abstract: A biosensor module is provided for detecting one or more biosignals at a wearer's ventral wrist. The module includes a housing having a wrist-facing inner surface and a non-wrist-facing outer surface, both formed of an insulative material, housing one or more processing units between the inner and outer surfaces; and one or more biosensors protruding from the wrist-facing inner surface and electronically coupled to the one or more processing units within the housing. An assembly is also provided, including a support member including a portion configured to receive a wrist band; and a biosensor module including a housing having a wrist-facing inner surface and a non-wrist-facing outer surface, the housing being curved in the wrist-facing direction and housing one or more processing units between the inner and outer surfaces, and one or more biosensors protruding from the wrist-facing inner surface and electronically coupled to the one or more processing units.

WO 2017/165532 A1

Masimo Ex. 1006
IPR Petition - US D947,842

BIOSENSOR MODULE FOR BAND ATTACHMENT

RELATED APPLICATION

This application claims priority to U.S. Provisional Application Serial No. 61/311674, entitled "BIOSENSOR MODULE FOR BAND ATTACHMENT," filed on March 22, 2016, which is incorporated herein in its entirety.

BACKGROUND

Biosensors measure physiological signals representative of a person's physical and emotional state. This information may be used as a type of biofeedback, which may aid a person to be aware of and alter their response to stressful situations or to avoid those situations. Such biofeedback may also aid a person to be aware of the quality of their sleep and how much they exercise. This information may also be used for diagnosis, detection, monitoring or treatment of health concerns and/or physiological disorders.

Biosensors may measure physiological signals such as temperature, heart rate, blood oxygenation, or sweat production of a user. The biosensors may be worn by a user such that they can measure those signals over time as the user participates in various activities throughout daily life demands. Such measurements produce data that may be analyzed to determine a user's biological and/or health state, such as if the user has a higher than average temperature, their stress to specific situations, changes in sleep patterns, and the intensity of exercise routines.

SUMMARY

One type of embodiment is directed to a biosensor module for detecting one or more biosignals at a ventral wrist of a wearer, the module comprising: a housing having a wrist-facing inner surface formed of an insulative material and a non-wrist-facing outer surface formed of the insulative material, housing one or more processing units between the inner and outer surfaces of the housing; and one or more biosensors protruding from the wrist-facing inner surface of the housing and electronically coupled to the one or more processing units within the housing.

Another type of embodiment is directed to an assembly comprising a support member comprising a portion configured to receive a wrist band, and a biosensor module

Masimo Ex. 1006
IPR Petition - US D947,842

comprising: a housing having a wrist-facing inner surface and a non-wrist-facing outer surface, the housing being curved in the wrist-facing direction and housing one or more processing units between the inner and outer surfaces of the housing; and one or more biosensors protruding from the wrist-facing inner surface of the housing and electronically coupled to the one or more processing units.

Another type of embodiment is directed to an assembly configured to attach to a wrist band of a watch, the assembly comprising: support means for attaching the assembly to a first wrist band of a first watch, detaching the assembly from the first wrist band of the first watch, and reattaching the assembly to a second wrist band of a second watch; and a biosensor module attached to the support means, the module comprising one or more biosensors oriented such that when the first wrist band is worn on a wrist of the consumer with the assembly attached, and when the second wrist band is worn on the consumer's wrist with the assembly attached, the one or more biosensors contact the consumer's ventral wrist.

Another type of embodiment is directed to a method of detecting one or more biosignals of a wearer of a wrist watch, the method comprising: attaching to a first wrist band of a first wrist watch a biosensor assembly comprising one or more biosensors; detecting one or more biosignals of the wearer via the attached biosensor assembly while the first wrist watch is worn on the wearer's wrist; detaching the biosensor assembly from the first wrist band of the first wrist watch and reattaching the biosensor assembly to a second wrist band of a second wrist watch; and detecting one or more biosignals of the wearer via the attached biosensor assembly while the second wrist watch is worn on the wearer's wrist.

Another type of embodiment is directed to a method of coupling a biosensor module with a wrist band of a watch, the method comprising: forming an assembly by attaching the biosensor module to support means for attaching the assembly to a first wrist band of a first watch, detaching the assembly from the first wrist band of the first watch, and reattaching the assembly to a second wrist band of a second watch; and attaching the assembly to a wrist band of a watch.

Another type of embodiment is directed to a clasp component for a wrist watch band, comprising: a first end portion comprising a clasp configured to secure the first end portion to a first portion of the band; a second end portion opposite the first end portion

Masimo Ex. 1006
IPR Petition - US D947,842

and comprising attachment means for attaching the clasp component to a second portion of the band; and a body portion between the first end portion and the second end portion, configured to hold one or more biosensors in the clasp component.

Another type of embodiment is directed to a wrist band assembly comprising: a clasp configured for placement at the underside of a wearer's wrist; and one or more biosensors positioned and configured to be held by the wrist band assembly in contact with the underside of the wearer's wrist only to the ulnar side of the clasp.

Another type of embodiment is directed to a wrist watch assembly comprising: a wrist band configured to form the wrist watch assembly into a ring around a wrist of a wearer; a watch face attached to the wrist band; and one or more biosensors attached to the wrist band at a position located in an angle 0-45 degrees from a diameter of the ring normal to the watch face.

Another type of embodiment is directed to a method of using a biosensor assembly to detect one or more biosignals of a wearer of a wrist band, the method comprising acts of: attaching the biosensor assembly to the wrist band; sliding the biosensor assembly along a longitudinal direction of the wrist band so that the biosensor assembly is disposed over the wearer's ulnar artery when the wrist band is worn on the wearer's wrist; and detecting one or more biosignals of the wearer via the biosensor assembly.

BRIEF DESCRIPTION OF DRAWINGS

The accompanying drawings are not intended to be drawn to scale. Moreover, it should be appreciated that sizes of the components depicted in the drawings may vary depending on desired configurations. In the drawings, each identical or nearly identical component that is illustrated in various figures is represented by a like numeral. For purposes of clarity, not every component may be labeled in every drawing. In the drawings:

FIGs. 1A-1G illustrate an exemplary biosensor module in accordance with some embodiments;

FIGs. 2A and 2B illustrate exemplary biosensor configurations in accordance with some embodiments;

Masimo Ex. 1006
IPR Petition - US D947,842

FIGs. 3A-3C illustrate exemplary components of a biosensor module in accordance with some embodiments;

FIGs. 4A-4E illustrate an exemplary support member in accordance with some embodiments;

FIGs. 5A-5E illustrate exemplary configurations of a biosensor module assembly and a wrist watch assembly in accordance with some embodiments;

FIG. 6 is a flow chart illustrating an exemplary method of detecting biosignals in accordance with some embodiments;

FIGs. 7A and 7B illustrate another exemplary support member in accordance with some embodiments;

FIGs. 8A and 8B illustrate another exemplary support member in accordance with some embodiments;

FIGs. 9A and 9B illustrate another exemplary support member in accordance with some embodiments;

FIGs. 10A and 10B illustrate another exemplary support member in accordance with some embodiments;

FIGs. 11A-11G illustrate another exemplary support member in accordance with some embodiments;

FIGs. 12A-12C illustrate another exemplary support member in accordance with some embodiments;

FIGs. 13A-13D illustrate further exemplary configurations of a biosensor module assembly and/or a wrist band assembly in accordance with some embodiments;

FIGs. 14A-14D illustrate further exemplary configurations of a biosensor module assembly and/or a wrist band assembly in accordance with some embodiments;

FIGs. 15A-15B illustrate further exemplary configurations of a biosensor module assembly in accordance with some embodiments;

FIGs. 16A-16B illustrate further exemplary configurations of a biosensor module assembly and/or a wrist band assembly in accordance with some embodiments;

FIGs. 17A-17B illustrate further exemplary configurations of a biosensor module assembly and/or a wrist band assembly in accordance with some embodiments;

FIGs. 18A-18B illustrate further exemplary configurations of a biosensor module assembly in accordance with some embodiments;

Masimo Ex. 1006
IPR Petition - US D947,842

FIGs. 19A-19D illustrate further exemplary configurations of a biosensor module assembly and/or a wrist band assembly in accordance with some embodiments;

FIGs. 20A-20B illustrate further exemplary configurations of a biosensor module assembly and/or a wrist band assembly in accordance with some embodiments;

FIGs. 21A-21B illustrate further exemplary configurations of a biosensor module assembly and/or a wrist band assembly in accordance with some embodiments; and

FIG. 22 illustrates an exemplary configuration of a module incorporating biosensor and audio functionalities, in accordance with some embodiments.

DETAILED DESCRIPTION

The inventors have recognized and appreciated that designs for biosensor devices and assemblies incorporating those modules may increase the availability of physiological data on users, enabling many useful functions, for a wide range of user demographics given personal styles and comforts. For example, the inventors have recognized that the more continuously and accurately a user's physiological data is measured, the better patterns may be observed to help the user understand how their activities and environment affect their well-being – such as what types of events and circumstances make them stressed, what activities calm them down, etc. The inventors have also appreciated that continuous and accurate biosignal measurements may be facilitated by making biosensor modules comfortable, inconspicuous, and/or able to be integrated relatively seamlessly into the user's normal life and routine. The inventors have also identified the physiological and anatomical topography of the ventral wrist into forearm encompassing the ulna and radius bones and the ulnar and radial arteries to design biosensor technologies to better fit that topography for data quality, comfort, and integration with a wide range of wrist and arm bands (e.g., a watch band or a standalone wrist band).

Some embodiments thus relate to designs and techniques for incorporating biosensor devices into a wearable article for making physiological measurements while being worn by a user (e.g., a person). These designs and techniques may provide user comfort, promoting use of the biosensors in many settings, including during normal work and personal activities. Alternatively or additionally, the wearable articles may hold the biosensors in a way that promotes accuracy of the measurements by the biosensors. By

Masimo Ex. 1006
IPR Petition - US D947,842

making accurate biosensor data collected during numerous activities of a user available for computerized processing, computerized tasks may be adapted based on a current biological state, such as stress or activity level, of the user.

Some embodiments relate to a wearable article that houses one or more electronic components such as biosensors. Some embodiments relate to a wearable article housing one or more electronic components that maintains one or more of the electronic components in contact with the wearer's wrist. In some embodiments, the wearable article may include a transmitter for communicating a current state of the wearer to a portable electronic device (e.g., a smart phone, tablet, PDA, etc.) or other computing device that may be programmed to perform different operations depending on the state of a user. Alternatively or additionally, the wearable article may include components, such as a processor and/or memory, that may process physiological measurements and determine a state of the wearer. The processor may update information stored in the memory that is used in mapping physiological information to a current state and as compared to previous states.

In some embodiments, the wearable article may be a wrist-worn watch, or may be configured to attach to a wrist-worn watch or to a part of a wrist-worn watch. In some embodiments, a biosensor device/module may be configured to attach to a standard wrist watch that a user might otherwise normally wear as part of the user's normal routine, e.g., outside of the context of the biosensor module. However, it should be appreciated that aspects of the present disclosure are not limited to attaching a biosensor module to a wrist watch. For instance, in some embodiments, the wearable article may be a standalone wrist band, which may include a strap made of any number of materials such as leather, nylon, and/or plastic, and the strap may be attached to a clasp.

In some embodiments, biosensor device(s) incorporated into a wearable article may include components such as those described in U.S. Patent Application Serial No. 13/040,816, filed March 4, 2011, and entitled "Devices and Methods for Treating Psychological Disorders;" those described in U.S. Provisional Patent Application Serial No. 61/310,280, filed March 4, 2010, and entitled "A device for monitoring and treating mood disorders;" those described in U.S. Patent Application Serial No. 14/702,208, filed May 1, 2015, and entitled "Wearable Electronics;" and/or those described in U.S. Provisional Patent Application Serial No. 61/987,346, filed May 1, 2014, and entitled

Masimo Ex. 1006
IPR Petition - US D947,842

"Wearable Electronics Designed To Fit Various Anatomies with Recombined Components." The disclosures of each of these applications are incorporated herein by reference in their entireties. For example, biosensor device components may include one or more: (micro)processors, memories and/or other data storage devices, transmitters, receivers, power sources, displays, motion sensors (e.g., accelerometers), vibration-generating devices, global positioning systems, clocks, and/or sensors, such as heart rate, pulse rate, beat-to-beat heart rate variability, electrocardiography, respiration rate, skin temperature, core body temperature, heat flow off the body, electrodermal activity (galvanic skin response), electromyography, electroencephalography, electrooculography, blood pressure, hydration level, muscle pressure, activity level, body position, optical reflectance of blood vessels, oxygen saturation sensors, etc.

In some embodiments, physiological data obtained by a biosensor device may be analyzed and processed by a local processor of the biosensor device to determine the wearer's health, including, e.g., the wearer's physical, mental, and/or emotional state. In some embodiments, the wearer may use this information to track their health state over time as the biosensor device acquires additional physiological data. Analysis and processing of physiological data in some embodiments may include determining a health state of a wearer based on the physiological data. The health state may include one or more parameters that indicate an aspect of the wearer's health, such as the wearer's current stress level, for example. Any suitable computation technique may be used to compute a health state value from a physiological signal. Exemplary techniques include those described in U.S. Patent Application Serial No. 13/040,816 and/or in U.S. Provisional Patent Application Serial No. 61/310,280, incorporated herein by reference.

In some embodiments, a processor attached to or embedded in the wearable article may receive physiological measurements obtained by the biosensor device and process the measurements to generate health state information. Such processing in some embodiments may include correlating physiological data to a health state based on previously acquired physiological data. The previously acquired data may correspond to known health state information, and in some embodiments current physiological data may be compared and/or mapped to the previously acquired data to determine current health state information.

Masimo Ex. 1006
IPR Petition - US D947,842

In some embodiments, the health state may correspond to a particular health value. The health value may have any suitable form and, in some embodiments, may represent a value of a single health-related characteristic. The value assigned may indicate the degree to which data associated with the wearer indicates that characteristic is present. For example, specific physiological data may correlate to a range of stress levels, and a stress level of the wearer corresponding to current physiological data may be identified by mapping the current physiological data to the specific physiological data. The current physiological data may be similar to the specific physiological data corresponding to the identified stress level. A health state value may indicate a stress level or a degree to which the wearer is stressed, for example. In some embodiments, the health state value may indicate multiple characteristics, such as, e.g., stress and activity level. By acquiring physiological data over time, in some embodiments the wearer's stress status along a range of stress levels may be tracked over time and may include a high stress level and a low stress level, such as may be characteristic of a calm and/or relaxed state.

The wearer may use such stress level information in any suitable way, such as to make decisions that may impact their overall well-being. To support such uses, in some embodiments the wearable article may include an output mechanism, such as a haptic device, sounds, and/or lights. Alternatively or additionally, the wearable article may include a transmitter and/or receiver for communication with a smart phone or other portable computing device that may process data and/or use information generated within the wearable article. In such embodiments, one or more of the biosensors described above and the analysis of the physiological data to determine a health state may be part of a biofeedback process.

In some embodiments, information regarding health states of a user determined based at least in part on sensor data from a wearable article such as embodiments described herein may be input to any suitable software application executing on a computing device, which may include one or more software applications having functions other than processing physiological data and providing biofeedback to a user. For example, in some embodiments, health state information may be provided to any type of software application (examples include e-mail applications, web browsers, office tool applications, music applications, gaming applications, geographic locations,

Masimo Ex. 1006
IPR Petition - US D947,842

treatment programs, doctor notes, thermostats, operating systems, and/or any other suitable application) to make the application aware and responsive to the health state of the user. Exemplary enhanced functionality of an application that is health-state-aware may include adapting the visual display of the application, such as colors, themes, etc., based on the user's health state, controlling operations executed by the application, such as playing music, scheduling events, changing the room temperature, blocking/allowing phone calls, and/or otherwise controlling execution of tasks that may impact and/or be impacted by the user's health state, and/or any other suitable health-state-aware functionality. Further examples of uses that may be made of health-state information provided by a biosensor device such as embodiments described herein are provided in U.S. Provisional Patent Application Serial No. 62/002,758, filed May 23, 2014, and entitled "OPERATING SYSTEM WITH COLOR-BASED HEALTH STATE THEMES." The disclosure of that application is hereby incorporated by reference herein in its entirety.

In some embodiments, a local data file on the biosensor device, or a data file stored in another location, may store the previously acquired physiological data as a profile. The profile may be derived from physiological data corresponding to one or more individuals. The profile may be updated to reflect additional physiological data and health state information resulting from analysis of the additional physiological data. In this manner, the profile in some embodiments may reflect changes in how physiological data corresponds to health state information and may improve identification of a health state as additional physiological data is included in the profile. In some embodiments, the profile may reflect physiological data for the wearer, and identifying a health state based on current physiological data of the wearer may include correlating the current physiological data to the previously acquired physiological data stored in the wearer's profile. As additional physiological data is acquired and processed to determine a current health state, updates to the profile may include at least a portion of the physiological data and the identified health state. In this manner, in some embodiments the profile may become specific to the wearer as additional physiological data for the wearer is acquired and health state information is identified.

In some embodiments, the profile may reflect physiological data acquired from a population of individuals and may include statistical information for physiological data

Masimo Ex. 1006
IPR Petition - US D947,842

associated with health state information of the population. Such statistical information may include a range, averages, and/or standard deviations of physiological data and health state values. Determining a health state for the wearer in some embodiments may include comparing current physiological data to the health statistical information and health information stored in the profile. The statistical information may provide physiological data statistics for a population corresponding to identified health states, and in some embodiments a wearer's health state may be identified by comparing current physiological data to the physiological data statistics. Updates to the profile may reflect changes to the statistical information and health information of the population as physiological data for individuals among the population is acquired. Additionally or alternatively, a profile based on population physiological data may be updated with physiological data and identified health state information of the wearer. In this manner, the profile may begin as a general or default profile and gradually adapt to include data specific to the wearer as physiological data is obtained by the biosensor device.

In some embodiments, the profile may also include contextual information associated with physiological data measured. The contextual information may include time, location, and/or activity that an individual is performing associated with the physiological data. The contextual information may be passed by a component of the biosensor device and/or received from another device such as a smartphone or other portable electronic device. The processor of the biosensor device may process context information to determine a current context for the user, and determining a health state may include analyzing the current context information associated with physiological data obtained by the biosensor device. The profile information may include the contextual information and related physiological data such that physiological data corresponding to a specific context can be retrieved and compared to current physiological data. A current context of the wearer may be used to select a subset of previously acquired physiological data and associated health state information.

In some embodiments, determining a current health state of the wearer may include comparing current physiological data to the subset of physiological data representing a similar user context. In this manner, a current health state of the wearer may be represented as a comparison to other occurrences when the wearer was in a similar situation. For example, context information may indicate that a wearer is

Masimo Ex. 1006
IPR Petition - US D947,842

commuting to work based on time and/or geographical information. A subset of physiological data stored in the profile may be selected by identifying physiological data from the profile associated with contextual information indicating similar time and/or geographical information, and a health state may be identified based on the subset of physiological data and indicate a relative health state in comparison to other times the wearer was on his morning commute. In some embodiments, patterns associated with a wearer's health under certain contexts may be identified by analyzing physiological data associated with a particular context. For example, such an analysis may indicate a pattern of an individual becoming more stressed while commuting.

Some embodiments relate to a biosensor module that can be attached to or integrated with a support member, forming an assembly that may be attached to a wrist band of a watch or may be embedded within the watch band. Some embodiments relate to a biosensor module that can be attached to or integrated with a support member, forming an assembly that may attach to any wrist band, or may be embedded within the wrist band, where the wrist band may be a standalone band, or may be attached to a device other than a watch. In some embodiments, the biosensor module and the support member may be configured such that the assembly can be attached to a wrist watch that is not designed specifically for receiving the biosensor module (e.g., to a standard wrist watch owned by the wearer, which could be purchased separately from the biosensor module). In some embodiments, the support member may be configured such that a consumer can attach the biosensor module assembly to one wrist watch at one time, detach the assembly from that wrist watch, and reattach the assembly to another wrist watch at another time. In some embodiments, the support member may be attached to or integrated with a clasp mechanism for holding a wrist band around the wearer's wrist, thus positioning the biosensor module assembly at the clasp of the wrist band. The wrist band may be a standalone band, or may be attached to a watch or other device. In some embodiments, the clasp mechanism may position the biosensor module assembly at the ulnar or radial artery of the wearer's ventral wrist.

In some embodiments, the biosensor module may be self-contained with one or more biosensors and one or more processing units for processing signals from the biosensor(s) in an insulative housing of the biosensor module, such that the biosensor module may maintain functionality despite being transferred from one wrist band or

Masimo Ex. 1006
IPR Petition - US D947,842

other wearable article to another. In some embodiments, the biosensor module may include, within or otherwise held by the housing, any one or more of the electronic components for a biosensor device discussed above, such as but not limited to one or more (micro)processors, memories and/or other data storage devices, transmitters, receivers, power sources (e.g., batteries), displays, motion sensors (e.g., accelerometers), vibration-generating devices, global positioning systems, clocks, etc. Any suitable number and/or type(s) of biosensors may be included in the biosensor module, such as but not limited to heart rate, pulse rate, beat-to-beat heart rate variability, electrocardiography, respiration rate, skin temperature, core body temperature, heat flow off the body, electrodermal activity (galvanic skin response), electromyography, electroencephalography, electrooculography, blood pressure, hydration level, muscle pressure, activity level, body position, optical reflectance of blood vessels, oxygen saturation sensors, etc. In some embodiments, one or more sensors other than biosensors may alternatively or additionally be included in the module, e.g., one or more environmental sensors, such as but not limited to one or more environmental temperature sensors, pressure sensors, humidity sensors, audio sensors, etc.

The inventors have appreciated that such a self-contained biosensor module may have the advantage of being easily transferrable from one wearable article (such as a wrist band) to another, without being electronically integrated with and therefore tied to a single wearable article. In addition, the inventors have developed assembly configurations that may allow such a self-contained biosensor module to be coupled with arbitrary bands, such as a band of a consumer's favorite wrist watch or other wrist watch, or a standalone wrist band, that need not be designed specifically for receiving the biosensor module.

In other embodiments, however, a biosensor module may be embedded in a wrist band and operatively coupled with one or more other devices in and/or attached to the band. For example, in some embodiments, a biosensor module embedded in a wrist band may be configured to receive power and/or data from, and/or to provide power and/or data to, a secondary device such as a smartwatch. In some such embodiments, the biosensor module may not have its own power supply as it may draw power from the secondary device; or conversely, the secondary device may not have its own power supply as it may draw power from the biosensor module. Similarly, in some

Masimo Ex. 1006
IPR Petition - US D947,842

embodiments, the biosensor module may not have its own processing unit as it may utilize processing capability of the secondary device; or conversely, the secondary device may not have its own processing unit as it may utilize processing capability of the biosensor module.

In some embodiments, the biosensor module and assembly may be designed for the wearer's comfort when worn attached to a wearable band such as a watch band or other wrist band. For example, in some embodiments, the biosensor module may be curved in the wrist-facing direction to conform to the wearer's wrist, or similarly to any other suitable body part on which the module may be worn. In some embodiments, when the biosensor module is coupled to the wrist band, the biosensor module may place one or more biosensors in contact with the underside (fleshy side) of the wearer's wrist on the ulnar side.

Some embodiments relate to a wrist band assembly having a clasp configured for placement at the underside of the wearer's wrist, and one or more biosensors positioned and configured to be held by the wrist band assembly in contact with the underside of the wearer's wrist only to the ulnar side of the clasp. Some embodiments relate to a wrist watch assembly in which one or more biosensors are attached to the wrist band at a position located in an angle 0-45 degrees from the diameter of the ring normal to the watch face. The inventors have appreciated that offsetting the biosensor(s) from the midline of the underside of the wearer's wrist, particularly in the ulnar direction, may increase comfort for the wearer while increasing accuracy of measured biosignals, as the biosensor(s) may protrude into the fleshy part of the wrist without uncomfortably pressing on bone, and may benefit from increased signal-to-noise ratio by being held proximate to the ulnar artery.

It should be appreciated that the foregoing description is by way of example only, and some embodiments are not limited to providing any or all of the above-described functionality, although some embodiments may provide some or all of the functionality described herein.

Features described herein can be implemented in any of numerous ways, and are not limited to any particular implementation techniques. Thus, while examples of specific implementation techniques are described below, it should be appreciated that the

Masimo Ex. 1006
IPR Petition - US D947,842

examples are provided merely for purposes of illustration, and that other implementations are possible.

One exemplary implementation of a biosensor module for detecting one or more biosignals at a wearer's wrist (or other suitable body location) is illustrated in perspective view in FIG. 1A. Exemplary biosensor module 100 includes a housing 110 having a wrist-facing inner surface 114 (designed to face toward the wearer's wrist when worn) and a non-wrist-facing outer surface 112 (designed to face away from the wearer's wrist when worn). In some embodiments, the housing surfaces may be formed of an insulative material, which may be any suitable type of insulative material, such as plastic, rubber, silicone, etc. In some embodiments, housing 110 of biosensor module 100 may house one or more processing units and/or other electronic components between the inner surface 114 and the outer surface 112 of the housing 110. In some embodiments, biosensor module 100 may include one or more biosensors 120 protruding from inner surface 114, in the wrist-facing direction (the direction indicated by the downward arrow in FIG. 1A. In some embodiments, the housing 110 of biosensor module 100 may be rigid (e.g., formed of rigid plastic) and curved in the wrist-facing direction (i.e., concave toward the wrist-facing direction), e.g., to conform to the curvature of the wearer's wrist when worn. In some embodiments, biosensor module 100 may have one or more attachment recesses 130 in housing 110, configured to attach the biosensor module 100 to a support member. In some embodiments, the support member may be a component that can be attached to a band; in other embodiments, the support member may include a portion of the band.

These exemplary features of biosensor module 100 are illustrated further in FIGs. 1B (top perspective view), 1C (top view), 1D (long side view), 1E (short side view), 1F (bottom perspective view), and 1G (bottom view).

Biosensor(s) 120 protruding from the wrist-facing inner surface 114 of housing 110 of biosensor module 100 may include any suitable number and/or type(s) of biosensors. One exemplary configuration is illustrated in exploded perspective view from the outside of wrist-facing inner surface 114 in FIG. 2A. In this example, the biosensors 120 of biosensor module 100 include two galvanic skin response (GSR) sensor pads 122, which detect and/or measure electrodermal activity (e.g., skin conductance) of the wearer. In the example configuration illustrated in FIG. 2A, GSR

Masimo Ex. 1006
IPR Petition - US D947,842

sensor pads 122 affix to biosensor module housing 110 in recesses 22 located on a protruding portion of housing 110 such that the GSR sensors 122 protrude from the inner surface 114 of housing 110. Such biosensors 120 may protrude by any suitable amount from inner surface 114 to help maintain contact between biosensors 120 and the wearer's skin when the biosensor module 100 is worn.

The exemplary configuration illustrated in FIG. 2A further includes a heart rate and/or blood oxygen sensor 124 mounted on a board 126 held within housing 110. In this exemplary configuration, heart rate sensor 124 protrudes through opening 24 in housing 110 and is protected from the outside by a glass lens 128. However, any suitable biosensor(s) may be used, and some embodiments may replace GSR sensors 122 and/or heart rate sensor 124 with any other suitable biosensor(s) for detecting one or more biosignals from the wearer. Examples of suitable biosensors include, but are not limited to, heart rate, pulse rate, beat-to-beat heart rate variability, electrocardiography, respiration rate, skin temperature, core body temperature, heat flow off the body, electrodermal activity (galvanic skin response), electromyography, electroencephalography, electrooculography, blood pressure, hydration level, muscle pressure, activity level, body position, optical reflectance of blood vessels, oxygen saturation sensors, etc.

It should be appreciated that the configuration of biosensors in the exemplary biosensor module of FIG. 2A is merely one example provided for illustrative purposes, and embodiments are not limited to any particular configuration such as the specific configuration of FIG. 2A. Any suitable arrangement, alignment, shape, size, etc., of biosensor(s) may be utilized, and different configurations may be desirable for use with different anatomies, different band styles, etc. Some other non-limiting examples of suitable biosensor arrangements for protrusion from inner surface 114 of housing 110 of biosensor module 100 are illustrated in FIG. 2B.

In some embodiments, one or more biosensor pads may have built-in compliance to maintain contact between the sensor(s) and the wearer's body surface as the body surface changes position, shape, etc. In some embodiments, one or more spring-like materials and/or mechanisms may be located under one or more sensors (i.e., on the opposite side of the sensor from the wearer's body surface) and may exert a force tending to press the sensor(s) toward and/or into the wearer's body surface.

Masimo Ex. 1006
IPR Petition - US D947,842

Alternatively or additionally, in some embodiments the module housing the sensor(s) may be designed to be worn tight against the wearer's body surface under a band with suitable tension and elasticity to tend to maintain contact between the sensor(s) and the wearer's body surface as the body surface moves.

5 As discussed above, in some embodiments a biosensor module may be self-contained, including one or more processing units, power sources, etc., in addition to the one or more biosensors, such that biosignals detected by the biosensor(s) can be processed and utilized regardless of which specific wearable article is used to affix the biosensor module to the wearer. FIG. 3A illustrates in exploded perspective view an 10 exemplary set of internal components and configuration for such a self-contained biosensor module 100. In the example illustrated in FIG. 3A, biosensor module 100 includes a circuit board 150, which may be a printed circuit board (PCB), that carries a set of electronic components 162 housed between the inner surface 114 and the outer surface 112 of the biosensor module housing 110. Among the electronic components 15 162 may be one or more processing units, which may be electronically coupled to the biosensors (e.g., GSR sensors 122 and heart rate sensor 124). In the example in FIG. 3A, sensors 122 and 124 may be electronically coupled to the one or more processing units on PCB 150, via board 126 (which may be another PCB) and data-carrying ribbon 152, which connects to PCB 150 via connecting port 154.

20 In some embodiments, the processing unit(s) may execute stored instructions to receive sensor data from biosensor(s) 120 and to analyze the received sensor data to identify a physiological and/or psychological state of the wearer. In this respect, in some embodiments, electronic components 162 may include one or more memories or other storage media that may store sensor data received from biosensor(s) 120 as well as 25 program instructions executed by the processing unit(s) of biosensor module 100. The processing of the sensor data may be done in any suitable way using any suitable technique(s) represented by the stored program instructions. For example, in some embodiments, the analysis may be performed using any of the techniques and any of the sensor data described in U.S. Patent Application Serial No. 13/040,816 and/or in U.S. 30 Provisional Patent Application Serial No. 61/310,280, incorporated herein by reference. Other exemplary techniques are described above. In some embodiments, the processing unit(s) may determine a level of stress exhibited by the wearer, based on the sensor data

Masimo Ex. 1006
IPR Petition - US D947,842

collected by biosensor(s) 120. In some embodiments, this stress level may be represented by the processing unit(s) as a numerical score or a category. Alternatively or additionally, in some embodiments raw sensor data may be transmitted for processing remotely from biosensor module 100, and/or some front-end processing may be performed in biosensor module 100 while further analysis may be performed remotely.

In some embodiments, biosensor module 100 may include in housing 110 (e.g., on main PCB 150, or held by housing 110 in any other suitable configuration) one or more wireless transmitters, such as a radio frequency (RF) transmitter, for transmitting data from the processing unit(s) and/or biosensor(s) to be analyzed and/or otherwise processed remotely from biosensor module 100. In some embodiments, this may include transmission of data indicating the physiological and/or psychological state of the wearer identified by analyzing the biosensor data, such as the stress level determined by processing the sensor data via the processing unit(s). Alternatively or additionally, raw sensor data may be transmitted in some embodiments. The data may be transmitted to any suitable receiving device for any suitable further use of the data. For example, in some embodiments, sensor data and/or processed data such as scores may be transmitted to a separate device carried by the wearer, such as a laptop, a tablet, a smart phone, a PDA, etc. In other embodiments, data may be transmitted to a device located elsewhere, such as a desktop computer or other device via a local wireless or Internet or cellular data connection. Alternatively or additionally, in some embodiments a transmitter may be used to send raw and/or processed data to a suitable receiving device in a watch face housing or other device coupled to biosensor module 100. In some embodiments, the transmitted data may be used to supply alerts to the wearer and/or to another recipient, related to the wearer's physiological and/or psychological state, e.g., as described in U.S. Patent Application Serial No. 13/040,816 and/or in U.S. Provisional Patent Application Serial No. 61/310,280, incorporated herein by reference.

In some embodiments, biosensor module 100 may include a vibration-generating device 170, controlled by the processing unit(s). Device 170 may be any suitable form of device capable of delivering a vibration stimulus to the wearer of biosensor module 100, including any suitable known or later developed form. In some embodiments, the processing unit(s) may activate vibration-generating device 170 to deliver vibration stimuli to alert the wearer to the wearer's physiological and/or psychological state as

Masimo Ex. 1006
IPR Petition - US D947,842

identified based on the data from biosensor(s) 120. For example, in some embodiments, a vibration alert may be delivered to the wearer when the wearer's stress level is determined to exceed any suitably designated threshold, which may be specified by the user or as a default standard.

In some embodiments, biosensor module 100 may further include one or more batteries 140 for providing power to the processing unit(s), to biosensor(s) 120, and/or to any other suitable electronic component(s) housed in biosensor module 100, via one or more electrical connections carrying power from the battery to the electronic component(s). Alternatively or additionally to any of the exemplary electronic components discussed above, any other suitable number and/or type(s) of electronic components may be included in biosensor module 100. For example, in some embodiments, alternatively or additionally to the one or more biosensors, one or more other sensors such as environmental sensors may be included in biosensor module 100 and electronically coupled to the one or more processing units within housing 110.

A different perspective view of the exploded components of exemplary biosensor module 100 is shown in FIG. 3B. In some embodiments, attachment recesses 130 in housing 110 of the biosensor module 100 may be configured to attach the biosensor module 100 to a support member 200, as illustrated in exploded view in FIG. 3C. In some embodiments, support member 200 may have one or more protrusions 230 configured to be received by attachment recesses 130 in housing 110 of the biosensor module 100 to attach the biosensor module 100 to support member 200. When biosensor module 100 is attached to support member 200, this may form an assembly 300, an example of which is illustrated in exploded view in FIG. 3C and in non-exploded perspective view in FIG. 5. In some embodiments, the support member may be configured to attach the assembly to a wrist band for wearing.

The support member 200 may take any suitable form for attaching the assembly comprising the biosensor module 100 and the support member 200 to a wrist band, such as the wrist band of a wrist watch, in some embodiments. One specific example of a suitable support member 210 is illustrated in perspective view in FIG. 4A. Example support member 210 is configured as a frame having a portion 26 configured to receive exemplary biosensor module 100 and a portion 28 configured to receive a wrist band. Example support member 210 may be formed from any suitable material(s), including

Masimo Ex. 1006
IPR Petition - US D947,842

but not limited to any suitable type(s) of metal, plastic, rubber, or other rigid or flexible material. In some embodiments, support member 210 may have a rigid shape to hold biosensor module 100 in place in attachment to a wrist band or other wearable article.

In example support member 210, two protrusions 230 extend inward from opposing surfaces 220 of the support member 210 and are shaped to conform to two of the attachment recesses 130 on opposing sides of biosensor module 100 to attach biosensor module 100 to support member 210. The protrusions 230 are located at a position along the length of support member 210 that divides the interior of support member 210 into space 232 for receiving biosensor module 100 and space 222 for receiving the wrist band (e.g., of a wrist watch). As illustrated in FIG. 4A and further in a different top perspective view in FIG. 4B, the space 222 is further defined by the opposing surfaces 220 of the portion 28 of the support member 210 that is configured to receive the wrist band. Those opposing surfaces 220 form a passage (via space 222) from one outer surface 224 facing in one direction of the assembly, to the opposite outer surface 226 facing in the opposite direction of the assembly. In some embodiments, as described further below, a wrist band such as the band of a wrist watch may be passed through space 222 to attach the assembly 300 formed of support member 210 and attached biosensor module 100 to the wrist band.

As illustrated in the view in FIG. 4B, example support member 210 includes an upper portion 240 that is slanted for accommodating the wrist band inserted through passage 222 in a direction parallel to the slanted inner surface of portion 240. Example support member 210 also includes a protrusion 250 configured to contact housing 110 of biosensor module 100 and exert pressure and/or friction on housing 110 to hold biosensor module 100 in place within space 232 of support member 210. These exemplary features and configuration of example support member 210 are illustrated further in FIGs. 4C (bottom perspective view), 4D (top view), and 4E (side view). It should be appreciated, however, that the specific configuration of support member 210 is an example provided merely for purposes of illustration, and that many other variations and alternative configurations are possible. For example, while example support member 210 is provided as a frame that surrounds space 232 on all four sides, this is not required in all embodiments. In some embodiments, for instance, a suitable support member may include only three sides – e.g., portion 240 for contacting the wrist band,

Masimo Ex. 1006
IPR Petition - US D947,842

plus adjacent support structure on two opposing sides of biosensor module 100 (forming a "C"-shaped support member). Also, while example support member 210 is illustrated with clearly defined sides and corners, this is not required in all embodiments, and some embodiments may be curved or have any other suitable design.

FIG. 5A is a perspective view illustrating the assembly 300 formed when biosensor module 100 is attached to example support member 210, e.g., by inserting the protrusions 230 of support member 210 in attachment recesses 130 of biosensor module 100. FIG. 5B is a top view showing the passage 222 between opposing surfaces 220 of support member 210 for receiving the wrist band above the attached biosensor module 100. In some embodiments, as illustrated in the example of FIGs. 5A and 5B, the biosensor module 100 may be attached to and separable from the support member 200 (e.g., from the example support member 210) in the assembly 300. FIG. 5C provides an example illustrating how exemplary biosensor module 100 may be attached to example support member 210 (top left panel 510) and separated from example support member 210 by pivoting the biosensor module 100 around protrusions 230 and away from protrusion 250 (top middle panel 520), and then removing the biosensor module 100 from the protrusions 230 that had been in contact with attachment recesses 130 (top right panel 530). However, it is not required for biosensor module 100 to be separable from support member 200 in all embodiments. In some embodiments, for example, the biosensor module may be integrally formed with the support member in the assembly.

FIG. 5C also illustrates how the example support member 210 is configured to attach exemplary assembly 300 (including the biosensor module 100 and the support member 210) to a wrist band 310, such as the wrist band of a wrist watch. In some embodiments, an end portion of the wrist band may be inserted through and between the opposing surfaces 220 of support member 210, such that the slanted portion 240 of example support member 210 may rest against the wrist band 310 (bottom left panel 540 of FIG. 5C). When the biosensor module 100 is attached to support member 210 at protrusions 230 and attachment recesses 130 (bottom middle panel 550), the wrist band 310 may then occupy space 222, extending through the passage formed between opposing surfaces 220 of support member 210. In bottom right panel 560, biomodule 100 is secured in place in space 232 of support member 210 by protrusions 230 and 250, and in this example the completed assembly 300 is then securely attached to the wrist

Masimo Ex. 1006
IPR Petition - US D947,842

band 310, because the clasp 320 of the wrist band 310 is larger than can be passed through passage 222 without first removing biosensor 100 from the assembly 300.

FIG. 5D illustrates an exemplary wrist band assembly (e.g., a wrist watch assembly) that may be formed when biosensor assembly 300 is attached to wrist band 310. The wrist band assembly may include a clasp 320 configured for placement at the underside of the wearer's wrist. In some embodiments, the wrist band assembly may include one or more biosensors, such as those of biosensor assembly 300, positioned and configured to be held by the wrist band assembly in contact with the underside of the wearer's wrist only to the ulnar side 580 of the clasp 320. In this manner, in some embodiments, the biosensor(s) may be positioned proximate to the ulnar artery, around position 590 on the wearer's wrist, which the inventors have appreciated may result in increased signal quality of biosignals such as pulse rate, oxygen saturation, etc. The inventors have further appreciated that the ulnar side of the underside of the wearer's wrist may be an advantageous location for protruding biosensors due to the relative lack of bony structures near to the skin surface on the ulnar side of the underside (fleshy side) (ventral side) of the wrist. Configurations adaptable to the radial side of the ventral wrist may also be advantageous. In some embodiments, one or more biosensors may be held to the ulnar side 580 of a wrist band's clasp by being held by a structure integrally formed with the clasp, with the biosensor(s) being held toward the ulnar end of the structure and the clasp being formed toward the other (radial) end of the structure. In other embodiments, the biosensor(s) may be held toward the radial end of the structure and the clasp may be formed toward the ulnar end of the structure. Examples of such clasp structures are provided below.

In some embodiments, the biosensor assembly may be configured such that, when attached to or embedded in the wrist band, the innermost surface of the biosensor(s) that contacts the wearer's skin may protrude from the inner surface of the wrist band a distance of between 0.1 mm and 15.0 mm. In some embodiments, the innermost biosensor surface may protrude a distance of between 0.1 mm and 10.0 mm from the inner surface of the wrist band (toward the skin of the wearer's wrist). In some embodiments, the innermost biosensor surface may protrude a distance of between 1.0 mm and 9.0 mm from the inner surface of the wrist band. In some embodiments, the innermost biosensor surface may protrude a distance of between 2.0 mm and 8.0 mm

Masimo Ex. 1006
IPR Petition - US D947,842

from the inner surface of the wrist band. In some embodiments, the innermost biosensor surface may protrude a distance of between 3.0 mm and 7.0 mm from the inner surface of the wrist band. In some embodiments, the distance that the innermost biosensor surface protrudes from the inner surface of the wrist band may be at least 0.1 mm, at least 0.2 mm, at least 0.5 mm, at least 1.0 mm, at least 2.0 mm, at least 3.0 mm, at least 4.0 mm, at least 5.0 mm, at least 6.0 mm, at least 7.0 mm, at least 8.0 mm, at least 9.0 mm, or at least 10.0 mm. In some embodiments, the distance that the innermost biosensor surface protrudes from the inner surface of the wrist band may be at most 15.0 mm, at most 12.0 mm, at most 10.0 mm, at most 9.0 mm, at most 8.0 mm, at most 7.0 mm, at most 6.0 mm, or at most 5.0 mm. For instance, in some embodiments in which a biosensor assembly is attached to the wrist band, the distance that the innermost biosensor surface protrudes from the inner surface of the wrist band may include both the thickness of the biosensor module housing and the distance that the biosensor(s) protrude from the housing. In some embodiments in which a biosensor assembly is embedded in a wrist band, for example, the distance that the innermost biosensor surface protrudes from the inner surface of the wrist band may include the distance that the biosensor(s) protrude from the biosensor module housing, while the thickness of the housing itself may be embedded in the band (i.e., not included in the protrusion from the inner surface of the band).

In some embodiments, as illustrated in FIG. 5D, a wrist watch assembly may include a watch face 330 attached to a wrist band 310 configured to form the wrist watch assembly into a ring around the wearer's wrist. One or more biosensors may be attached to the wrist band at a position located in an angle 0-45 degrees from a diameter of the ring 570 normal to the watch face. For example, in some embodiments, the centerline of the biosensor(s) may be located at a position in an angle 5-40 degrees from diameter 570 in the direction of the ulnar bone of the wrist. In various exemplary embodiments, the centerline of the biosensor(s) may be located in a position that is no less than 5 degrees to the ulnar side of diameter 570, no less than 10 degrees to the ulnar side of diameter 570, or no less than 15 degrees to the ulnar side of diameter 570. In various exemplary embodiments, the centerline of the biosensor(s) may be located in a position that is no more than 40 degrees to the ulnar side of diameter 570, no more than 35 degrees to the ulnar side of diameter 570, or no more than 30 degrees to the ulnar side of diameter 570.

Masimo Ex. 1006
IPR Petition - US D947,842

In some embodiments, such positioning may result in the biosensor(s) being located on the ulnar side of the underside of the wrist while the wrist watch assembly with the biosensor(s) is worn. While this is accomplished in the foregoing examples using an attachable and detachable biosensor assembly, and one that is configured to be adjustable in position along the wrist band by the consumer, embodiments are not all so limited. In some embodiments, for example, a biosensor assembly may be attached to a wrist band in a fixed position, and/or may be fixedly attached such that it is not moveable by the consumer from one wrist band to another.

It should be appreciated, however, that the foregoing references to positioning of the biosensor(s) on the ulnar side of the underside of the wrist are merely exemplary, and other embodiments may position the biosensor(s) in a different location, by design and/or by the choice of the wearer. For example, in some embodiments, the biosensor(s) may be positioned on the radial side of the underside of the wrist, e.g., proximate to the radial artery. Any of the foregoing configurations in relation to the clasp, angles from the diameter 570, etc., may be reversed in some embodiments to position the biosensor(s) on the radial side of the wrist. Some examples of such positioning alternatives are illustrated in FIG. 5E, where the rectangle illustrates the general area of the underside of the wrist where one or more biosensors may be positioned, and the top right diagram illustrates two exemplary locations on a cross-section of the wrist in which a biosensor module may be positioned to bring the biosensor(s) in proximity to the radial and/or ulnar artery. The cross-sections of the wrist shown at the bottom of FIG. 5E further illustrate the anatomical features of the wrist shown in more simplified view in the top right diagram. (The underside of the wrist is at the top of each cross-section.)

It should be appreciated from the foregoing that one type of embodiment is directed to a method 600 of detecting one or more biosignals of a wearer of a wrist watch, as illustrated in FIG. 6. Method 600 begins at act 610, at which a biosensor assembly including one or more biosensors may be attached to a first wrist band of a first watch. At act 620, one or more biosignals of the wearer may be detected via the attached biosensor assembly while the first wrist watch is worn on the wearer's wrist. Then, at act 630, the biosensor assembly may be detached from the first wrist band of the first wrist watch, and reattached to a second wrist band of a second wrist watch. As discussed above, in some embodiments, a consumer may thus be able to switch the biosensor

Masimo Ex. 1006
IPR Petition - US D947,842

assembly from one wrist watch band to another such that it can be worn with different wrist watches as desired. At act 640, one or more biosignals of the wearer may be detected via the attached biosensor assembly while the second wrist watch is worn on the wearer's wrist. As discussed above, in some embodiments, the biosensor assembly may be self-contained with biosensor(s) and processing unit(s) such that it can function to detect the wearer's biosignals as it is switched between different wrist bands. At act 650, the method may continue with use of the biosensor assembly together with the same first and second wrist watches or with different wrist watches, as desired by the wearer.

Another type of embodiment is directed to a method of coupling a biosensor module with a wrist band of a watch. Such a method may be performed, in some embodiments, by a consumer wearer of the biosensor module. In other embodiments, the method may be performed by a manufacturer or a seller of the wrist watch. An assembly may be formed by attaching the biosensor module to support means for attaching the assembly to a first wrist band of a first watch, detaching the assembly from the first wrist band of the first watch, and reattaching the assembly to a second wrist band of a second watch. The assembly thus formed may then be attached to a wrist band of a watch. Examples of suitable support means are described above and below, and include, for instance, various example configurations of support member 200.

As discussed above, support member 200 may take any of various suitable forms in various embodiments. Another example support member 212 is illustrated in FIGs. 7A (perspective view) and 7B (top view). Example support member 212 includes a first frame 260 for receiving biosensor module 100 in space 232, and a second frame 262 for receiving a wrist band through space 222 between opposing surfaces 220 of support member 212. Similar to example support member 210, the space 222 defined in example support member 212 by the upper portion of frame 260 and the slanted upper portion 240 and opposing surfaces 220 of frame 262 forms a passage from outer surface 224 of the assembly to outer surface 226 facing in the opposite direction. Also similar to example support member 210, frame 260 in example support member 212 includes protrusions 230 for insertion in attachment recesses 130 of biosensor module 100, and protrusion 250 for holding biosensor module 100 in place in space 232 and aligned with frame 260.

Frames 260 and 262 in example support member 212 may be made of any suitable material(s), and may be made of the same material in some embodiments, or of

Masimo Ex. 1006
IPR Petition - US D947,842

different materials in other embodiments. In some embodiments, frame 260 for receiving biosensor module 100 may be made of a rigid material such as metal or hard plastic, while frame 262 for receiving the watch band may be made of a more flexible material, such as rubber or textile. In some embodiments, interior frame 260 may be separable from exterior frame 262, such that interior frame 260 holding biosensor module 100 could be coupled with various different exterior frames 262 of different sizes and/or shapes to accommodate different sizes and/or shapes of wrist bands. In other exemplary embodiments, frame 262 may extend only around space 222, as opposed to extending entirely around frame 260 in addition to space 222. For example, in another embodiment, frame 260 and frame 262 of support member 212 may be formed by a continuous flexible band that wraps around biosensor module 100 and then around a wrist band, optionally with a twist in the flexible band between the biosensor module 100 and the wrist band to separate spaces 232 and 222.

Another example of a suitable support member 200 is example support member 214 configured for use with wider wrist bands, as illustrated in FIGs. 8A (perspective view) and 8B (top view). Example support member 214 is similar to example support member 210, except that space 222 for receiving the wider wrist band between opposing surfaces 220 is widened by extending the frame of example support member 214 outward in the portion above protrusions 230. It should be appreciated that a similar principle may also be applied to adapt example support member 212 for wider wrist bands in some embodiments, by widening the portion of frame 262 around space 222.

Another example of a suitable support member 200 is example support member 216 configured for use with narrower wrist bands, as illustrated in FIGs. 9A (perspective view) and 9B (top view). Example support member 216 is similar to example support members 210 and 214, except that space 222 for receiving the narrower wrist band between opposing surfaces 220 is narrowed by drawing the frame of example support member 216 inward in the portion above protrusions 230. It should be appreciated that a similar principle may also be applied to adapt example support member 212 for narrower wrist bands in some embodiments, by narrowing the portion of frame 262 around space 222.

It should be appreciated from the foregoing that each of example support members 210, 212, 214, and 216 provides an example of support means for attaching the

Masimo Ex. 1006
IPR Petition - US D947,842

assembly of the support means and the biosensor module to a first wrist band of a first watch, detaching the assembly from the first wrist band of the first watch, and reattaching the assembly to a second wrist band of a second watch. The assembly with such support means can thus, in some embodiments, be transferred by the consumer from one watch to another, and can be worn with any of various arbitrary wrist bands, such as wrist bands of standard wrist watches that need not be designed specifically for integration with biosensors. In some embodiments, the biosensor module attached to the support means may include one or more biosensors that may be oriented such that when any of these wrist bands is worn on the consumer's wrist with the assembly attached, the biosensor(s) contact the consumer's wrist. A "consumer," as the term is used herein, refers to a user who is not a developer of the biosensor assembly or of the wrist band or wrist watch. A consumer may be a purchaser of the biosensor module, assembly, and/or of the wrist band or wrist watch.

In some embodiments, as described and illustrated above, the support means may include a passage allowing the wrist band to be passed through the support means from a first outer surface of the assembly to an opposing second outer surface of the assembly. In some embodiments, the support means may be configured to maintain the assembly in contact with the wrist band while allowing the assembly to slide along a length of the wrist band when the wrist band is not worn on the consumer's wrist. In some embodiments, as illustrated in FIG. 5D, this may allow the consumer to adjust the positioning of the biosensor assembly along the watch band such that the biosensor assembly aligns with a comfortable and/or high-data-quality location on the consumer's wrist when the biosensor(s) are secured against the consumer's wrist by the wrist band.

In some embodiments, the assembly may be configured such that the biosensor module hangs from the wrist band when the band is not secured around the wearer's wrist, but is pressed into contact with the wrist and held in a fixed location when the wrist band is secured around it. Thus, in some embodiments, the support means may be configured to maintain one end portion of the biosensor assembly in contact with the wrist band in a manner such that when that end portion is maintained in contact with the wrist band by the support means and the wrist band is worn on the consumer's wrist, the opposite end portion of the assembly is maintained in contact with the wrist band. This may be accomplished, for example, by the wrist band passage 222 being located in the

Masimo Ex. 1006
IPR Petition - US D947,842

end portion 28 of the support means. For instance, in the example illustrated in FIG. 5C, the support means's passage 222 receives the wrist band and maintains the support means's end portion 28 in contact with the wrist band, while the opposite end portion 30 hangs away from the wrist band when the wrist band is not worn on the consumer's wrist. However, when the wrist band is clasped around the consumer's wrist (FIG. 5D), the biosensor assembly is pressed between the wrist and the wrist band, and the end portion 30 of the biosensor assembly is pressed into contact with the wrist band.

Another example of a suitable support member 200 is example support member 218, illustrated in FIGs. 10A (perspective view) and 10B (top view). Example support member 218 includes a space 232 for receiving biosensor module 100, a portion 270 configured to receive a wrist band such as the wrist band of a wrist watch, and a wrist band clasp mechanism portion 280. As in the other exemplary support members described above, example support member 218 includes protrusions 230 configured to couple with attachment recesses 130 in housing 110 of biosensor module 100 to attach biosensor module 100 to support member 218, as well as protrusion 250 to hold biosensor module 100 in place within space 232 and aligned with support member 218. The portion 270 of example support member 218 configured to receive the wrist band includes opposing surfaces 220 forming a recessed attachment portion in an end portion of support member 218 (the end portion including portion 270). The recessed attachment portion is configured to attach the end portion of support member 218 to an end portion of the wrist band. In this example, the recessed attachment portion includes a pin 272 configured to attach the end portion of support member 218 to the end portion of the wrist band, e.g., by receiving the end portion of the wrist band wrapped around pin 272 and secured to itself to attach the wrist band to the support member 218.

At the opposing end portion of example support member 218 (the end portion including portion 280) is the wrist band clasp mechanism, which in this example includes a D-clasp. The D-clasp is formed from pin 282 and buckle arm 284 forming a "D" shape with slanted upper surface 240 being approximately bisected by arm 284. The D clasp may function to secure the wrist band around the wrist of the wearer by receiving an end portion of the wrist band through support member 218 and inserting the buckle arm through a hole in the wrist band, while an opposite end portion of the wrist band is attached to support member 218 at portion 270.

Masimo Ex. 1006
IPR Petition - US D947,842

Example support member 218 thus provides a clasp component for a wrist band, such as a wrist watch band. The clasp component includes a first end portion (the end portion including portion 280) including a clasp configured to secure the first end portion of the clasp component to a corresponding first portion of the wrist band. The example of support member 218 includes a D-clasp; however, any other suitable clasp may alternatively be used. The clasp component also includes a second end portion (the end portion including portion 270) opposite the first end portion, including attachment means for attaching the clasp component to a corresponding second portion of the wrist band. The attachment means is provided in example support member 218 by pin 272 around which the second portion of the wrist band may be secured, or which may be threaded through a link of the wrist band, etc. Between the first end portion and the second end portion, the clasp component includes a body portion (e.g., including space 232 and the surrounding structures in example support member 218) configured to hold one or more biosensors in the clasp component. In the example of support member 218, the body portion of the clasp component is configured to hold the biosensors in an attachable/detachable biosensor module; however, this is not required in all embodiments, and other configurations are possible. For example, in some other embodiments, the biosensor module may be integrated into a solid clasp component, e.g., with the housing of the biosensor module integrally formed with the support member and having a clasp at an end portion.

Another example of a suitable support member 200 is example support member 290, which is illustrated at various stages of assembly in FIGs. 11A-G. Example support member 290 includes a base member 292 illustrated in perspective view in FIG. 11A and in top view in FIG. 11B, having a space 232 for receiving biosensor module 100, and a portion 270 configured to receive a wrist band such as the wrist band of a wrist watch. Like the other exemplary support members described above, example support member 290 includes protrusions 230 configured to couple with attachment recesses 130 in housing 110 of biosensor module 100 to attach biosensor module 100 to support member 290, as well as protrusion 250 to hold biosensor module 100 in place within space 232 and aligned with support member 290. The portion 270 of example support member 290 configured to receive the wrist band includes opposing surfaces 220 forming a recessed attachment portion in an end portion of support member 290 (the end portion including

Masimo Ex. 1006
IPR Petition - US D947,842

portion 270). The recessed attachment portion is configured to attach the end portion of support member 290 to an end portion of the wrist band. In this example, the recessed attachment portion includes a pin 272 configured to attach the end portion of support member 290 to the end portion of the wrist band, e.g., by receiving the end portion of the wrist band wrapped around pin 272 and secured to itself to attach the wrist band to the support member 290, or by threading the pin 272 through a corresponding passage in a link of a wrist band formed of chained links.

At the opposite end portion of base member 292 is another recessed attachment portion, with a pin 274 for attaching a middle member 294 within the support member 290. The base member 292 with attached middle member 294 is illustrated in FIGs. 11C (perspective view) and 11D (top view). Middle member 294 includes an end portion attached to base member 292 via pin 274, and a pin 276 at an opposite end portion for attaching a top member 196 within the support member 290. The full assembly of example support member 290 with base member 292, middle member 294, and top member 296 is illustrated in FIGs. 11E (top perspective view), 11F (side view), and 11G (bottom perspective view). As can be seen from FIGs. 11E-G, the assembled example support member 290 includes a wrist band clasp mechanism including a Z-clasp, with the "Z" shape being formed by the base member 292, middle member 294, and top member 296 which may fold down upon each other to latch the clasp. Example support member 290 includes a pin 278 for attaching support member 290 to an end portion of the wrist band while an opposite end portion of the wrist band is attached to support member 290 at portion 270 via pin 272. The Z-clasp of example support member 290 may thus function to secure the wrist band around the wrist of the wearer by collapsing the top member 296 down onto the middle member 294 and the middle member 294 down onto the base member 292, latching the component members in the collapsed position and bringing the end portions of the wrist band closer together around the wearer's wrist.

Illustrated in FIG. 12A is another exemplary configuration 1200, in which a wrist watch band portion 1210 is adapted to receive a biosensor module such as exemplary module 100. In the example configuration of FIG. 12A, wrist band portion 1210 has an end portion 1220 configured to attach to a watch face in any suitable manner. At the opposing end portion of wrist band portion 1210 is a clasp mechanism 1230 for securing wrist band portion 1210 to another wrist band portion to secure the wrist watch around

Masimo Ex. 1006
IPR Petition - US D947,842

the wearer's wrist. The clasp mechanism may be of any suitable type, as embodiments are not limited in this respect. In the example of FIG. 12A, the wrist band portion 1210 further includes an opening 1240 into which biosensor module 100 may be inserted for wearing in contact with the wearer's wrist. Exemplary wrist band portion 1210 includes protrusions 1250 into opening 1240, which may make contact with attachment recesses 130 of biosensor module 100 to aid in holding biosensor module 100 in place within opening 1240 of wrist band portion 1210. In some embodiments, wrist band portion 1210 may be made of a flexible material, such as rubber or flexible thermoplastic, such that opening 1240 may be deformed slightly to receive biosensor module 100 and may close tightly around it to hold the module in place via friction and/or pressure.

The exemplary configuration of FIG. 12A is illustrated in FIGs. 12B (top perspective view) and 12C (bottom perspective view) with the biosensor module 100 inserted and held within opening 1240. Alternatively, in some embodiments, biosensor module 100 may be integrated with the wrist band portion 1210, such as by forming the top housing of the biosensor module 100 integrally with and of the same material as the wrist band portion 1210. In some embodiments, the bottom housing 110 of the biosensor module 100 may be formed of a different material than the wrist band / top housing and may be secured in any suitable matter to the bottom surface of the wrist band portion 1210. For example, in some embodiments, the bottom housing 110 of the biosensor module 100 may be of a more rigid material (e.g., metal, rigid plastic, etc.) than the wrist band / top housing, and may house the internal electronic components of biosensor module 100 between the rigid bottom housing 110 and the more flexible top housing formed integrally with the rest of the wrist band portion 1210. In some embodiments, the wrist band portion 1210 may be designed and configured for wearing with the clasp mechanism 1230 at the underside of the wearer's wrist and the biosensor module 100 to the ulnar side of the clasp mechanism 1230, as discussed above.

FIG. 13A is a perspective view showing an assembly formed when an illustrative biosensor module 1300 is attached to an illustrative support member 1310, in accordance with some embodiments. The biosensor module 1300 may be attached to the support member 1310 in any suitable manner, e.g., by inserting one or more protrusions (e.g., illustrative protrusion 1340 shown in FIG. 13D) of the support member 1310 into one or more corresponding recesses (not shown) of the biosensor module 1300, or vice versa.

Masimo Ex. 1006
IPR Petition - US D947,842

In some embodiments, the support member 1310 may be a frame. For instance, the support member 1310 may include rigid portions on at least three sides of an opening.

In some embodiments, the support member 1310 may be adapted to receive a wrist band (e.g., illustrative wrist band 1330) of a first wrist band assembly. The first wrist band assembly may include an illustrative clasp 1320 at a first end of the wrist band 1330. In some embodiments, the clasp 1320 may be adapted to engage with a second wrist band assembly (not shown), and a second end of the wrist band 1330 may be adapted to engage a wearable device (e.g., a watch), so that the first and second wrist band assemblies, when engaged with each other and the wearable device, fasten the wearable device to a user's wrist. However, that is not required, as in some embodiments the wrist band assembly may be a standalone assembly. For instance, in some embodiments, the second end of the wrist band 1330 may be adapted to engage the clasp 1320.

In an embodiment in which the first wrist band assembly is adapted to engage a wearable device, the support member 1310 may be positioned on the wrist band 1330 such that the support member 1310 is closer to the first end of the wrist band 1330 (where the clasp 1320 is located) than the second end of the wrist band 1330 (where the wrist band 1330 is adapted to engage a wearable device). In this manner, the biosensor module 1300 may be offset from a ventral midline of the user's wrist in the ulnar direction when the wrist band 1330 is worn by the user.

In an embodiment in which the first wrist band assembly is adapted to be standalone, the support member 1310 may be positioned on the wrist band 1330 such that a distance between the support member 1310 and the clasp 1320 is no more than one quarter of a length of the wrist band 1330. In this manner, the biosensor module 1300 may be offset from a ventral midline of the user's wrist in the ulnar direction when the wrist band 1330 is worn by the user with the clasp 1320 positioned over the ventral midline of the user's wrist.

In some embodiments, the support member 1310 and/or the biosensor module 1300 may be configured to slide along a longitudinal direction of the wrist band 1330. In this manner, a user may adjust a position of the biosensor module 1300 around a perimeter of the user's wrist. For instance, the user may do so for comfort, or may be

Masimo Ex. 1006
IPR Petition - US D947,842

instructed to position the biosensor module 1300 over the user's ulnar artery for improved detection of biosignals.

FIG. 13B is a side view of the illustrative assembly shown in FIG. 13A, with the wrist band 1330 being threaded through the assembly. FIG. 13C is another perspective view of the illustrative assembly shown in FIG. 13A, without the wrist band 1330 being threaded through the assembly. FIG. 13D is a perspective view of the illustrative support member 1310 shown in FIG. 13A, with the protrusion 1340 adapted to engage and retain the illustrative biosensor module 1300.

FIG. 14A is a perspective view showing an assembly formed when an illustrative biosensor module 1400 is attached to an illustrative support member 1410, in accordance with some embodiments. The support member 1410 may be similar to the illustrative support member 1310 shown in FIG. 13A, except the support member 1410 may include a flared portion (e.g., illustrative flared portion 1440 shown in FIG. 14D) to create an opening that can accommodate an illustrative wrist band 1430 that is wider than the biosensor module 1400.

FIG. 14B is a side view of the illustrative assembly shown in FIG. 14A, with the wrist band 1430 being threaded through the assembly. FIG. 14C is another perspective view of the illustrative assembly shown in FIG. 14A, without the wrist band 1430 being threaded through the assembly. FIG. 14D is a perspective view of the illustrative support member 1410 shown in FIG. 14A, with the flared portion 1440 adapted to receive the wider wrist band 1430.

FIG. 15A is a perspective view showing an assembly formed when an illustrative biosensor module 1500 is attached to an illustrative support member 1510, in accordance with some embodiments. The biosensor module 1500 may be attached to the support member 1510 in any suitable manner, e.g., by inserting one or more protrusions (e.g., illustrative protrusion 1540 shown in FIG. 15B) of the support member 1510 into one or more corresponding recesses (not shown) of the biosensor module 1500, or vice versa.

In the example shown in FIG. 15A, the support member 1510 is a clasp configured to engage one or more wrist bands. For example, a pin 1520 may be removably attached to the support member 1510, and may be configured to pivotably couple the support member 1510 to a wrist band.

Masimo Ex. 1006
IPR Petition - US D947,842

FIG. 16A is a perspective view showing an assembly formed when an illustrative biosensor module 1600 is attached to an illustrative support member 1610, in accordance with some embodiments. The biosensor module 1600 may be attached to the support member 1610 in any suitable manner, e.g., by inserting one or more protrusions of the support member 1610 into one or more corresponding recesses of the biosensor module 1600, or vice versa. FIG. 16B is a perspective view of the illustrative support member 1610 shown in FIG. 16A, without the biosensor module 1600 being attached to the support member 1610.

In the example shown in FIG. 16A, the support member 1610 may be embedded into a wrist band (e.g., illustrative wrist band 1630) of a first wrist band assembly. The first wrist band assembly may include an illustrative clasp 1620 at a first end of the wrist band 1630. In some embodiments, the clasp 1620 may be adapted to engage with a second wrist band assembly (not shown), and a second end of the wrist band 1630 may be adapted to engage a wearable device (e.g., a watch), so that the first and second wrist band assemblies, when engaged with each other and the wearable device, fasten the wearable device to a user's wrist. However, that is not required, as in some embodiments the wrist band assembly may be a standalone assembly. For instance, in some embodiments, the second end of the wrist band 1630 may be adapted to engage the clasp 1620.

FIG. 17A is a perspective view showing an assembly formed when an illustrative biosensor module 1700 is attached to an illustrative support member 1710, in accordance with some embodiments. The biosensor module 1700 may be attached to the support member 1710 in any suitable manner, e.g., by inserting one or more protrusions of the support member 1710 into one or more corresponding recesses of the biosensor module 1700, or vice versa. FIG. 17B is a perspective view of the illustrative support member 1710 shown in FIG. 17A, without the biosensor module 1700 being attached to the support member 1710.

In the example shown in FIG. 17A, the support member 1710 may be embedded into a wrist band (e.g., illustrative wrist band 1730) of a first wrist band assembly. The first wrist band assembly may include an illustrative clasp 1720 at a first end of the wrist band 1730. The wrist band 1730 and the clasp 1720 may be similar to the illustrative wrist band 1630 and the illustrative clasp 1620 shown in FIG. 16A, except the wrist band

Masimo Ex. 1006
IPR Petition - US D947,842

1730 may include an opening 1740 configured to allow the support member 1710 and/or the biosensor module 1700 to slide along a longitudinal direction of the wrist band 1730. In this manner, a user may adjust a position of the biosensor module 1700 around a perimeter of the user's wrist. For instance, the user may do so for comfort, or may be instructed to position the biosensor module 1700 over the user's ulnar artery for improved detection of biosignals.

For instance, in some embodiments, a user may be instructed to make a fist and identify an indentation on the user's ventral wrist toward the pinky side. Then the user may be instructed to slide the biosensor module 1700 along a longitudinal direction of the wrist band 1730 so that the biosensor module 1700 is positioned over the indentation. In this manner, the ligaments along the ventral midline of the wrist may help to push the biosensor module 1700 towards the user's ulnar artery during use.

FIG. 18A is a perspective view showing an assembly formed when an illustrative biosensor module 1800 is attached to an illustrative support member 1810, in accordance with some embodiments. The biosensor module 1800 may be attached to the support member 1810 in any suitable manner, e.g., by inserting one or more protrusions of the support member 1810 into one or more corresponding recesses of the biosensor module 1800, or vice versa. FIG. 18B is a perspective view of the illustrative support member 1810 shown in FIG. 18A, without the biosensor module 1800 being attached to the support member 1810.

In the example shown in FIG. 18A, the support member 1810 is a link configured to engage one or more wrist bands. For example, a pin 1820 may be removably attached to the support member 1810, and may be configured to pivotably couple the support member 1810 to a first wrist band. Likewise, a pin 1820 may be removably attached to the support member 1810, and may be configured to pivotably couple the support member 1810 to a second wrist band.

FIG. 19A is a perspective view showing an assembly formed when an illustrative biosensor module 1900 is attached to an illustrative support member 1910, in accordance with some embodiments. The biosensor module 1900 may be attached to the support member 1910 in any suitable manner, e.g., by inserting one or more protrusions of the support member 1910 into one or more corresponding recesses of the biosensor module 1900, or vice versa.

Masimo Ex. 1006
IPR Petition - US D947,842

In some embodiments, the support member 1910 may include one or more retaining features configured to engage one or more fasteners adapted to fasten the support member 1910 to a wrist band (e.g., illustrative wrist band 1930) of a first wrist band assembly. The first wrist band assembly may include an illustrative clasp 1920 at a first end of the wrist band 1930. In some embodiments, the clasp 1920 may be adapted to engage with a second wrist band assembly (not shown), and a second end of the wrist band 1930 may be adapted to engage a wearable device (e.g., a watch), so that the first and second wrist band assemblies, when engaged with each other and the wearable device, fasten the wearable device to a user's wrist. However, that is not required, as in some embodiments the wrist band assembly may be a standalone assembly. For instance, in some embodiments, the second end of the wrist band 1930 may be adapted to engage the clasp 1920.

Any suitable fastener may be used to fasten the support member 1910 to the wrist band 1930. In the example shown in FIG. 19, the support member 1910 is fastened to the wrist band 1930 by an elastic band 1940. This may allow the support member 1910 and/or the biosensor module 1900 to slide along a longitudinal direction of the wrist band 1930. In this manner, a user may adjust a position of the biosensor module 1900 around a perimeter of the user's wrist. For instance, the user may do so for comfort, or may be instructed to position the biosensor module 1900 over the user's ulnar artery for improved detection of biosignals.

FIG. 19B is a side view of the illustrative assembly shown in FIG. 19A, with the wrist band 1930 being threaded through the assembly. FIG. 19C is another perspective view of the illustrative assembly shown in FIG. 19A, without the wrist band 1930 being threaded through the assembly. FIG. 19D is a perspective view of the illustrative support member 1910 shown in FIG. 13A, without the illustrative biosensor module 1900 being attached to the support member 1910.

FIG. 20A is a perspective view showing an assembly formed when an illustrative biosensor module 2000 is attached to an illustrative support member 2010, in accordance with some embodiments. The biosensor module 2000 may be attached to the support member 2010 in any suitable manner, e.g., by inserting one or more protrusions of the support member 2010 into one or more corresponding recesses of the biosensor module 2000, or vice versa.

Masimo Ex. 1006
IPR Petition - US D947,842

In some embodiments, the support member 2010 may include one or more retaining features configured to engage one or more fasteners adapted to fasten the support member 2010 to a wrist band (e.g., illustrative wrist band 2030) of a first wrist band assembly. The first wrist band assembly may include an illustrative clasp 2020 at a first end of the wrist band 2030. In some embodiments, the clasp 2020 may be adapted to engage with a second wrist band assembly (not shown), and a second end of the wrist band 2030 may be adapted to engage a wearable device (e.g., a watch), so that the first and second wrist band assemblies, when engaged with each other and the wearable device, fasten the wearable device to a user's wrist. However, that is not required, as in some embodiments the wrist band assembly may be a standalone assembly. For instance, in some embodiments, the second end of the wrist band 2030 may be adapted to engage the clasp 2020.

Any suitable fastener may be used to fasten the support member 2010 to the wrist band 2030. In the example shown in FIG. 19, the support member 2010 includes a tab 2040 that can be fastened to the wrist band 1930, for example, by adhesive or stitching. For instance, the tab 2040 may be flexible, with an adhesive layer and a peel-off backing layer.

FIG. 20B is another perspective view of the illustrative assembly shown in FIG. 20A, without the wrist band 2030 being attached to the assembly.

FIG. 21A is a perspective view showing an assembly formed when an illustrative biosensor module 2100 is attached to an illustrative support member 2110, in accordance with some embodiments. The support member 2110 may be similar to the illustrative support member 2010 shown in FIG. 20A, except the support member 2110 may include multiple tabs (e.g., illustrative tabs 2140 and 2150 shown in FIG. 21A) that can be fastened to wrist band 2130, for example, by adhesive or stitching, as described above in connection with FIGs. 20A-20B.

FIG. 21B is another perspective view of the illustrative assembly shown in FIG. 21A, without the wrist band 2130 being attached to the assembly.

It should be appreciated that the foregoing examples are provided merely for purposes of illustration and are not intended to be limiting. While various examples of biosensor module configurations and support members are provided above, some

Masimo Ex. 1006
IPR Petition - US D947,842

embodiments are not limited to any of these examples, and other examples are contemplated.

For instance, in some embodiments, an audio module may be attached to a wrist band in addition to, or instead of, a biosensor module. In some embodiments, a single module may include both audio and biosensor functionalities. An example of such a module 2200 is shown in FIG. 22. The module 2200 may include one or more microphones 2220, one or more speakers 2210, and/or associated hardware components (not shown) (e.g., wireless transceiver, circuit board, etc.). In this manner, the module 2220 may be used as a wireless headset. For example, the module 2220 may be attached to a side of the wrist band that faces away from a user's wrist. To use the module 2220 as a wireless headset, the user may be instructed to hold up his palm to his ear, so that the module 2220 on the wrist band is positioned adjacent the user's mouth. The user may be further instructed to cup his hand to help amplify sound coming from the module 2220 attached to the watchband.

The phraseology and terminology used herein is for the purpose of description and should not be regarded as limiting. The use of "including," "comprising," "having," "containing," "involving," and variations thereof, is meant to encompass the items listed thereafter and additional items. Use of ordinal terms such as "first," "second," "third," etc., in the claims to modify a claim element does not by itself connote any priority, precedence, or order of one claim element over another or the temporal order in which acts of a method are performed. Ordinal terms are used merely as labels to distinguish one claim element having a certain name from another element having a same name (but for use of the ordinal term), to distinguish the claim elements.

Having described several embodiments of the invention in detail, various modifications and improvements will readily occur to those skilled in the art. Such modifications and improvements are intended to be within the spirit and scope of the invention. Accordingly, the foregoing description is by way of example only, and is not intended as limiting.

Masimo Ex. 1006
IPR Petition - US D947,842

CLAIMS

What is claimed is:

1. An assembly comprising:
a support member comprising a portion configured to receive a wrist band; and
a biosensor module comprising:
a housing having a wrist-facing inner surface and a non-wrist-facing outer surface, the housing being curved in the wrist-facing direction and housing one or more processing units between the inner and outer surfaces of the housing; and
one or more biosensors protruding from the wrist-facing inner surface of the housing and electronically coupled to the one or more processing units.

2. The assembly of claim 1, wherein the biosensor module is attached to and separable from the support member.

3. The assembly of claim 1, wherein the biosensor module is integrally formed with the support member.

4. The assembly of claim 1, wherein the portion of the support member configured to receive the wrist band comprises opposing surfaces of the support member defining a space therebetween.

5. The assembly of claim 4, wherein the opposing surfaces of the support member form a passage from a first outer surface of the assembly, facing in a first direction, to a second outer surface of the assembly, facing in a second direction, opposite the first direction.

6. The assembly of claim 4, wherein the opposing surfaces of the support member form a recessed attachment portion in an end portion of the support member, configured to attach the end portion of the support member to an end portion of the wrist band.

Masimo Ex. 1006
IPR Petition - US D947,842

7. The assembly of claim 6, wherein the recessed attachment portion comprises a pin configured to attach the end portion of the support member to the end portion of the wrist band.

8. The assembly of claim 6, further comprising the wrist band.

9. The assembly of claim 8, further comprising a watch face attached to the wrist band.

10. The assembly of claim 1, wherein the support member comprises a wrist band clasp mechanism.

11. The assembly of claim 10, wherein the clasp mechanism comprises a D-clasp.

12. The assembly of claim 10, wherein the clasp mechanism comprises a Z-clasp.

13. The assembly of claim 1, wherein the support member comprises a frame.

14. The assembly of claim 13, wherein the frame comprises rigid portions on at least three sides of an opening.

15. An assembly configured to attach to a wrist band of a watch, the assembly comprising:

support means for attaching the assembly to a first wrist band of a first watch, detaching the assembly from the first wrist band of the first watch, and reattaching the assembly to a second wrist band of a second watch; and

a biosensor module attached to the support means, the module comprising one or more biosensors oriented such that when the first wrist band is worn on a wrist of the consumer with the assembly attached, and when the second wrist band is worn on the consumer's wrist with the assembly attached, the one or more biosensors contact the consumer's ventral wrist.

Masimo Ex. 1006
IPR Petition - US D947,842

16. The assembly of claim 15, wherein the support means is configured to maintain the assembly in contact with the first wrist band while allowing the assembly to slide along a length of the first wrist band.

17. The assembly of claim 15, wherein the support means comprises a passage allowing the first wrist band to be passed through the support means from a first outer surface of the assembly to an opposing second outer surface of the assembly.

18. The assembly of claim 15, the assembly having a first end portion and a second end portion opposite the first end portion, wherein the support means is configured to maintain the first end portion of the assembly in contact with the first wrist band in a manner such that when the first end portion of the assembly is maintained in contact with the first wrist band by the support means and the first wrist band is worn on the consumer's wrist, the second end portion of the assembly is maintained in contact with the first wrist band.

19. A method of detecting one or more biosignals of a wearer of a wrist watch, the method comprising:

attaching to a first wrist band of a first wrist watch a biosensor assembly comprising one or more biosensors;

detecting one or more biosignals of the wearer via the attached biosensor assembly while the first wrist watch is worn on the wearer's wrist;

detaching the biosensor assembly from the first wrist band of the first wrist watch and reattaching the biosensor assembly to a second wrist band of a second wrist watch; and

detecting one or more biosignals of the wearer via the attached biosensor assembly while the second wrist watch is worn on the wearer's wrist.

20. A method of coupling a biosensor module with a wrist band of a watch, the method comprising:

forming an assembly by attaching the biosensor module to support means for attaching the assembly to a first wrist band of a first watch, detaching the assembly from

Masimo Ex. 1006
IPR Petition - US D947,842

the first wrist band of the first watch, and reattaching the assembly to a second wrist band of a second watch; and

attaching the assembly to a wrist band of a watch.

21. A clasp component for a wrist watch band, comprising:

a first end portion comprising a clasp configured to secure the first end portion to a first portion of the band;

a second end portion opposite the first end portion and comprising attachment means for attaching the clasp component to a second portion of the band; and

a body portion between the first end portion and the second end portion, configured to hold one or more biosensors in the clasp component.

22. A wrist band assembly comprising:

a clasp configured for placement at the underside of a wearer's wrist; and

one or more biosensors positioned and configured to be held by the wrist band assembly in contact with the underside of the wearer's wrist only to the ulnar side of the clasp.

23. The wrist band assembly of claim 22, wherein:

the clasp is located at a first end of the wrist band assembly;

a second end of the wrist band assembly is configured to engage a wearable device; and

the one or more biosensors are positioned closer to the first end than the second end.

24. The wrist band assembly of claim 22, wherein:

the clasp is located at a first end of the wrist band assembly;

a second end of the wrist band assembly is configured to engage the clasp; and

a distance between the one or more biosensors and the clasp is no more than one quarter of a length of the wrist band assembly.

25. A wrist band assembly comprising:

Masimo Ex. 1006
IPR Petition - US D947,842

a clasp configured for placement at the underside of a wearer's wrist; and

one or more biosensors positioned and configured to be held by the wrist band assembly in contact with the underside of the wearer's wrist only to the radial side of the clasp.

26. A wrist watch assembly comprising:

a wrist band configured to form the wrist watch assembly into a ring around a wrist of a wearer;

a watch face attached to the wrist band; and

one or more biosensors attached to the wrist band at a position located in an angle 0-45 degrees from a diameter of the ring normal to the watch face.

27. A method of using a biosensor assembly to detect one or more biosignals of a wearer of a wrist band, the method comprising acts of:

attaching the biosensor assembly to the wrist band;

sliding the biosensor assembly along a longitudinal direction of the wrist band so that the biosensor assembly is disposed over the wearer's ulnar artery when the wrist band is worn on the wearer's wrist; and

detecting one or more biosignals of the wearer via the biosensor assembly.

28. The method of 27, further comprising acts of:

making a fist;

identifying an indentation on the wearer's ventral wrist toward the pinky side, wherein the act of sliding the biosensor assembly along a longitudinal direction of the wrist band comprises positioning the biosensor assembly over the identified indentation; and

moving the wearer's wrist when the wrist band is worn on the wearer's wrist, so that at least one ligament along a ventral midline of the wrist pushes the biosensor assembly towards the wearer's ulnar artery.

29. A biosensor module for detecting one or more biosignals at a ventral wrist of a wearer, the module comprising:

Masimo Ex. 1006
IPR Petition - US D947,842

a housing having a wrist-facing inner surface formed of an insulative material and a non-wrist-facing outer surface formed of the insulative material, housing one or more processing units between the inner and outer surfaces of the housing; and

one or more biosensors protruding from the wrist-facing inner surface of the housing and electronically coupled to the one or more processing units within the housing.

30. The biosensor module of claim 29, wherein the housing is rigid and curved in the wrist-facing direction.

31. The biosensor module of claim 29, further comprising a battery within the housing, configured to provide power to the one or more processing units.

32. The biosensor module of claim 29, further comprising one or more environmental sensors electronically coupled to the one or more processing units within the housing.

33. The biosensor module of claim 29, wherein the housing comprises one or more attachment recesses configured to attach the biosensor module to a support member.

34. The biosensor module of claim 33, in combination with the support member, thereby forming an assembly comprising the biosensor module and the support member.

35. The assembly of claim 34, wherein the support member is configured to attach the assembly to a wrist band.

36. The biosensor module of claim 29, embedded within a wrist band and configured to receive power and/or data from, and/or to provide power and/or data to, a secondary device.

Masimo Ex. 1006
IPR Petition - US D947,842

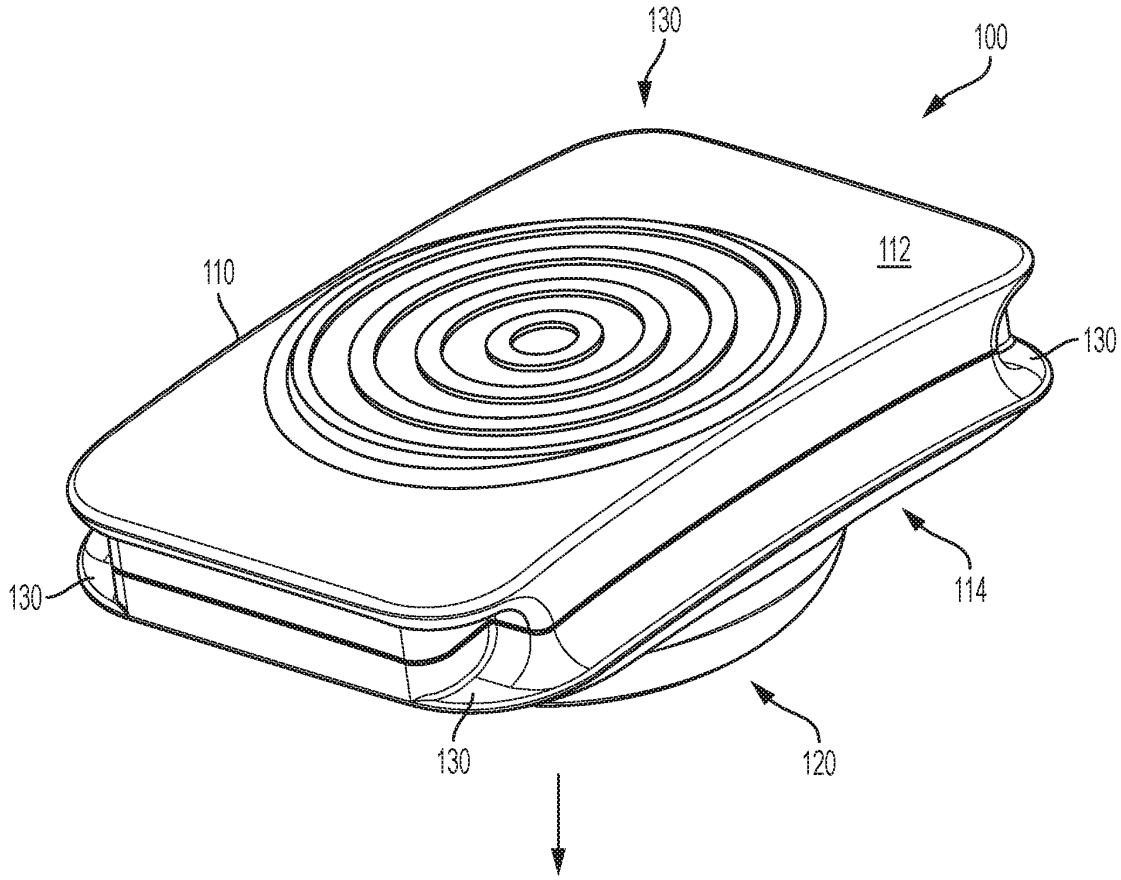

FIG. 1A

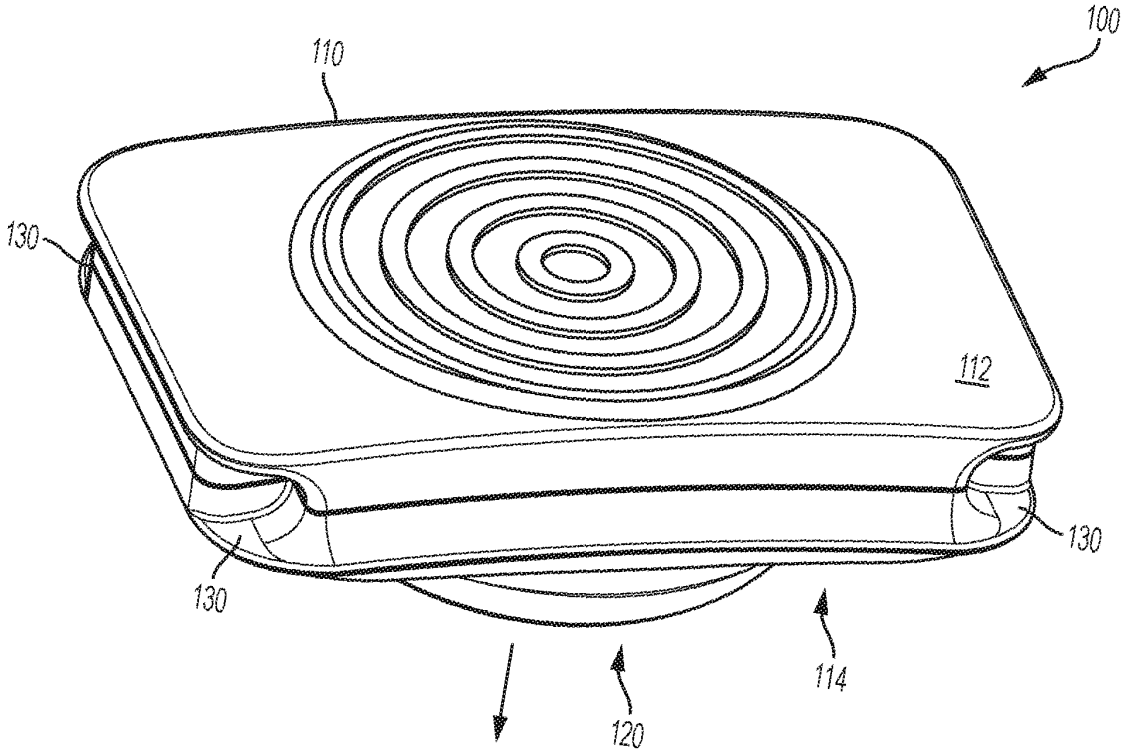

FIG. 1B

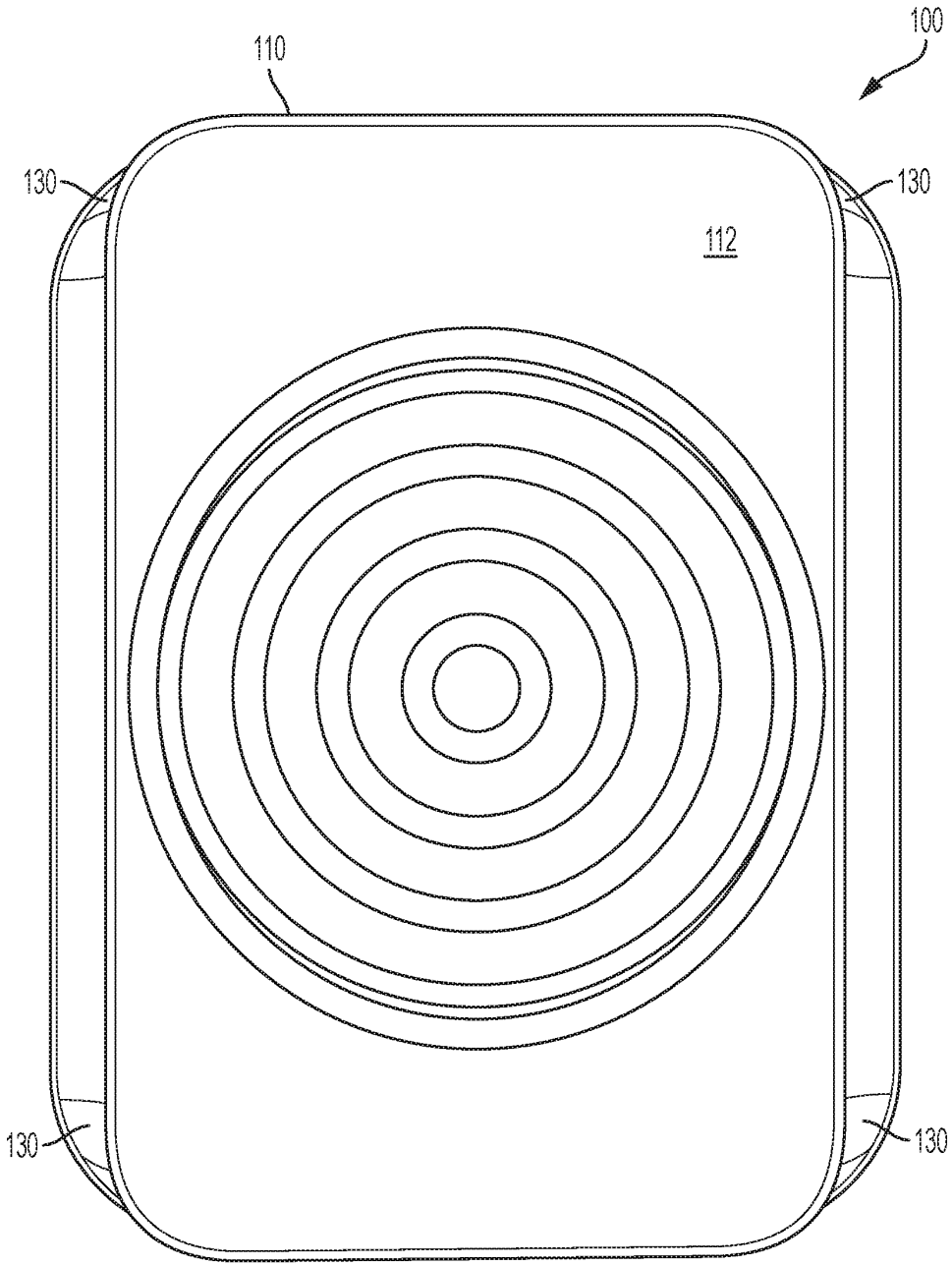

FIG. 1C

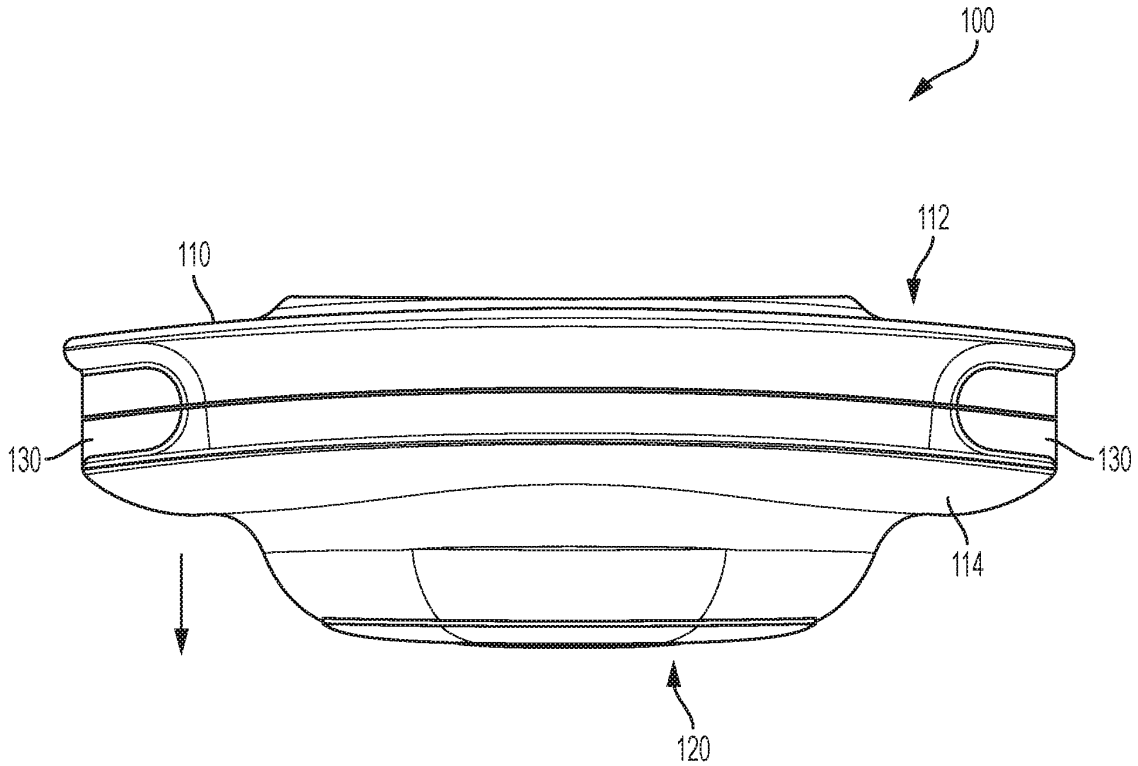

FIG. 1D

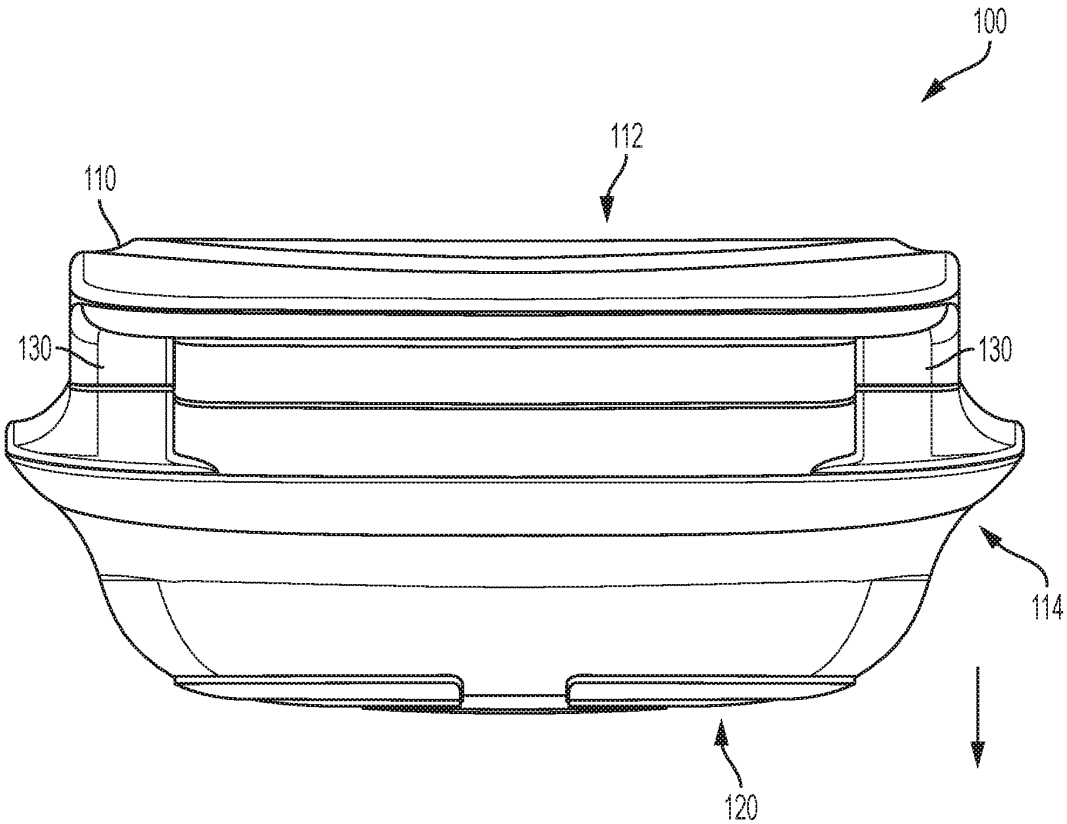

FIG. 1E

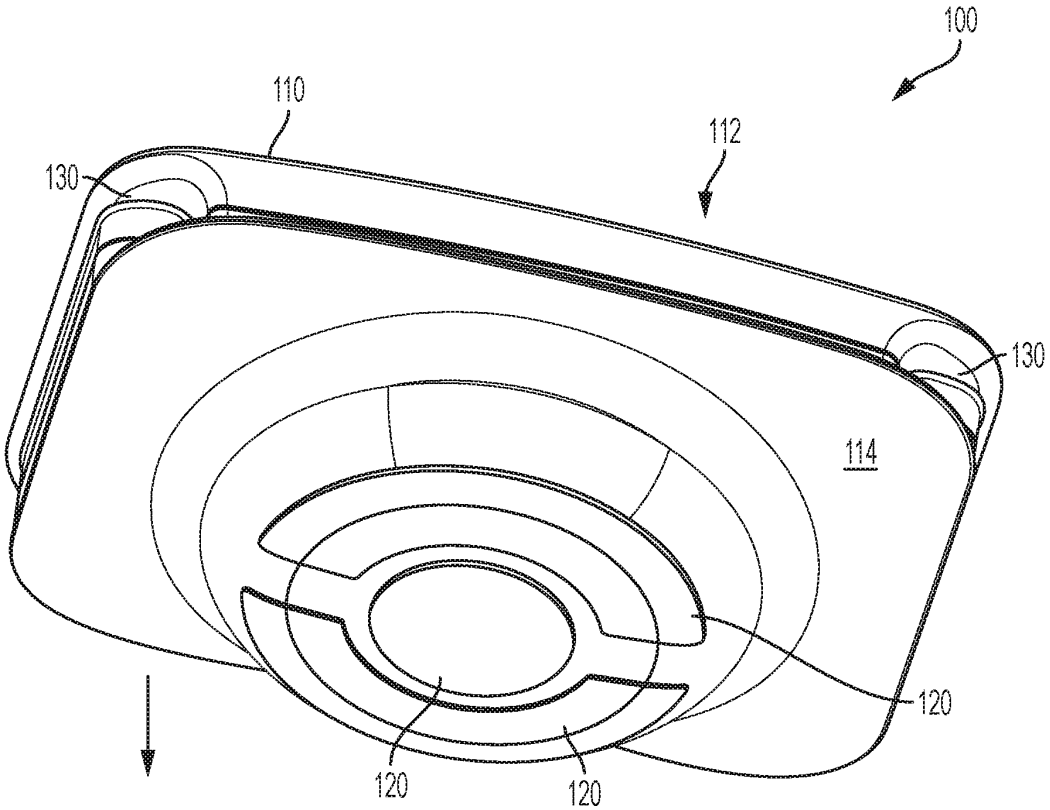

FIG. 1F

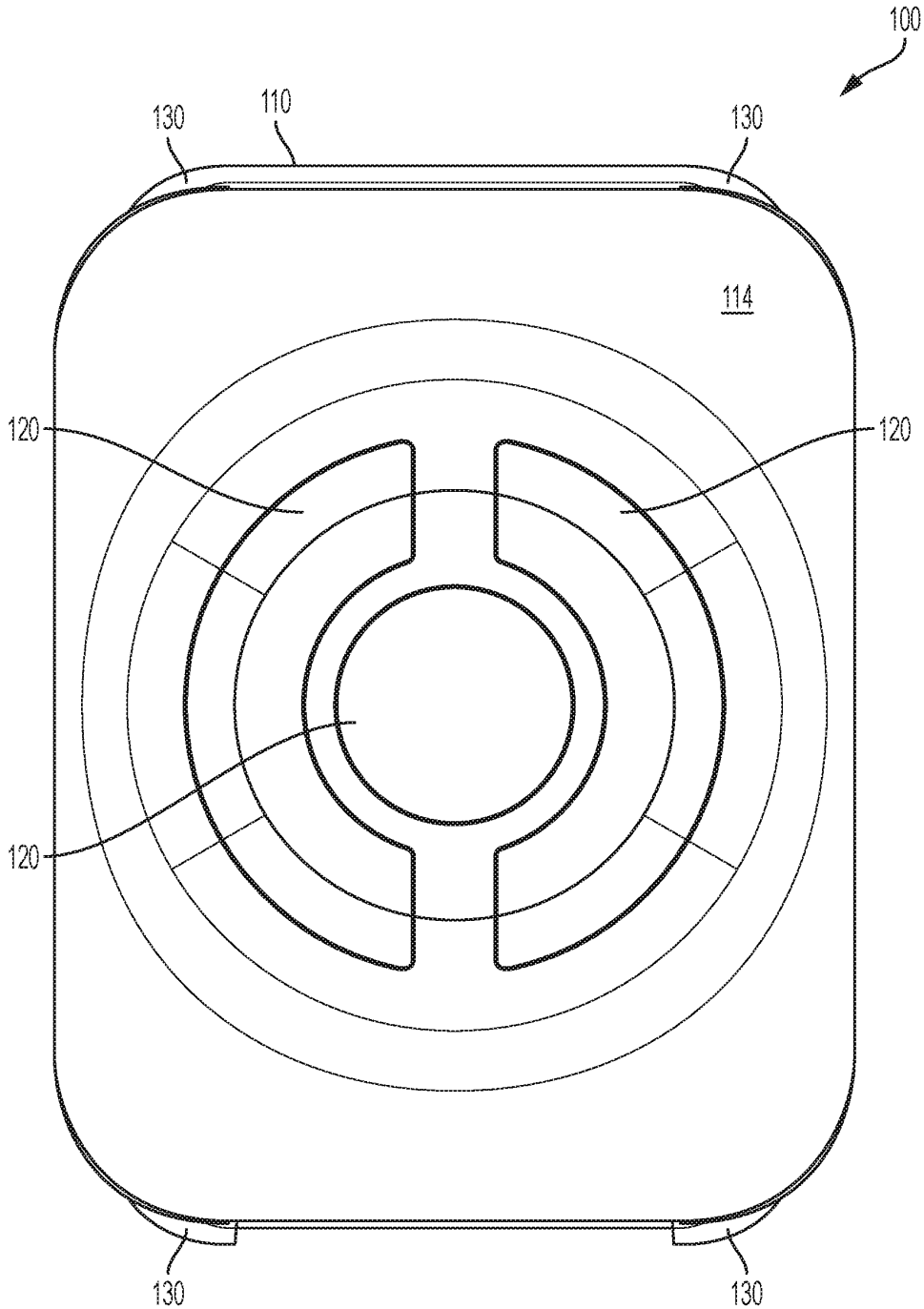

FIG. 1G

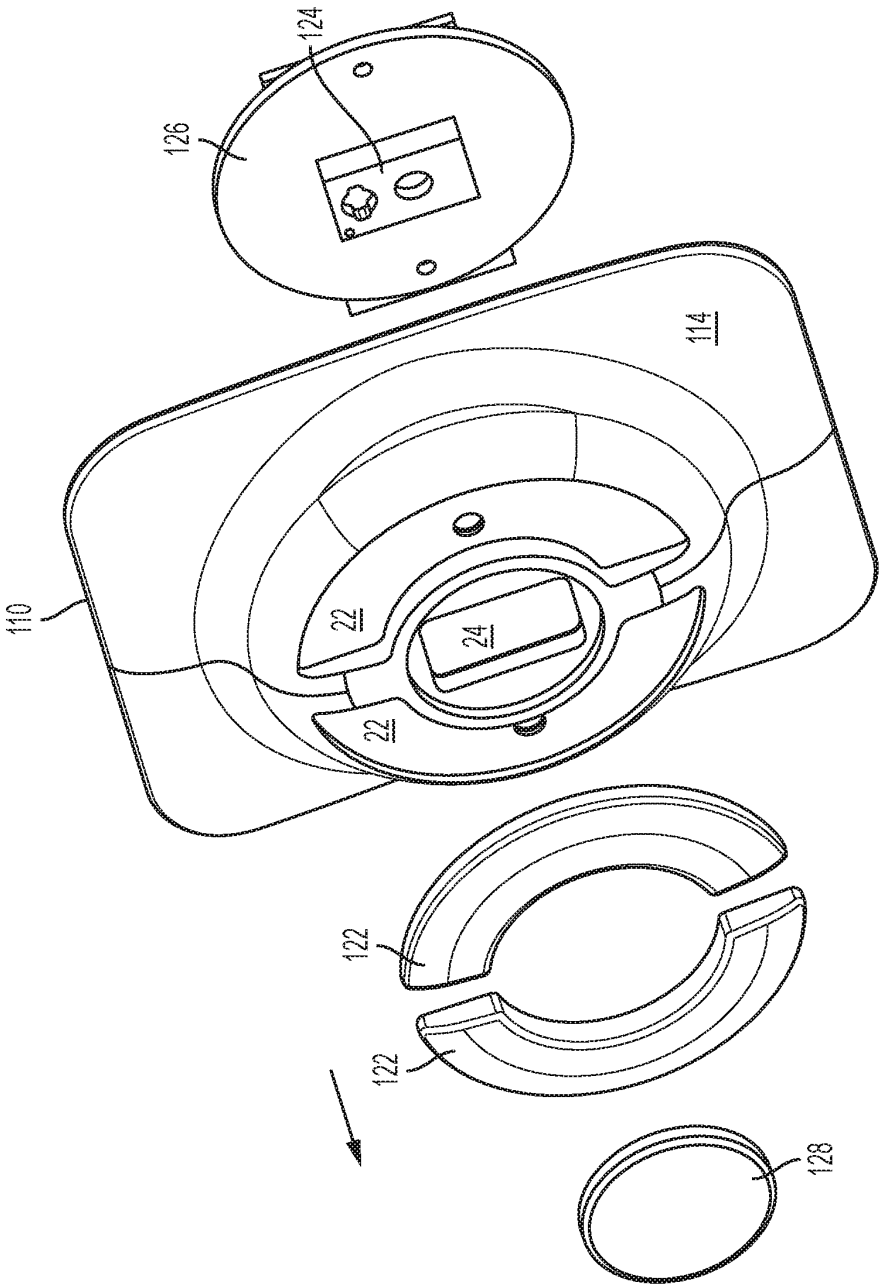

FIG. 2A

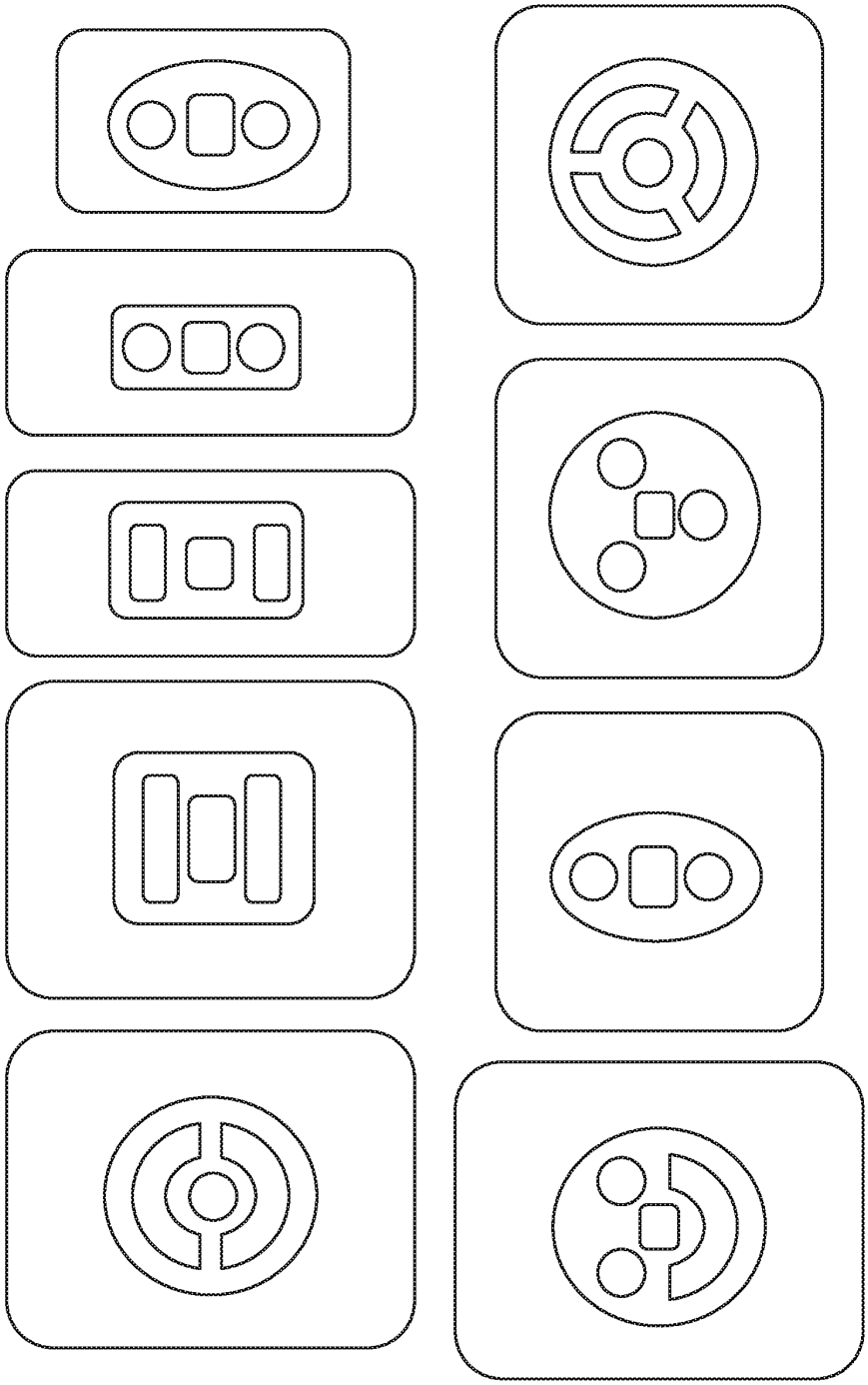

FIG. 2B

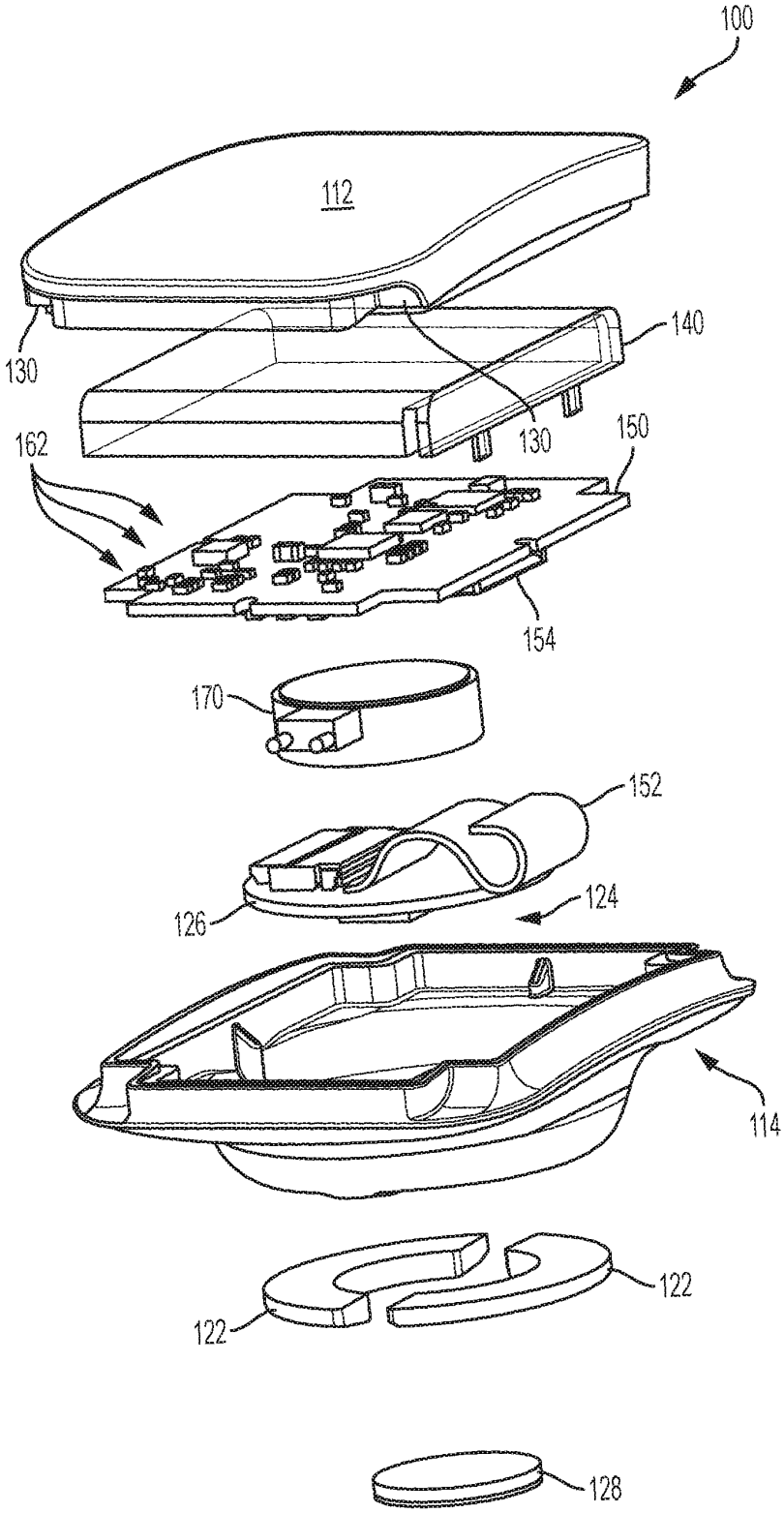

FIG. 3A

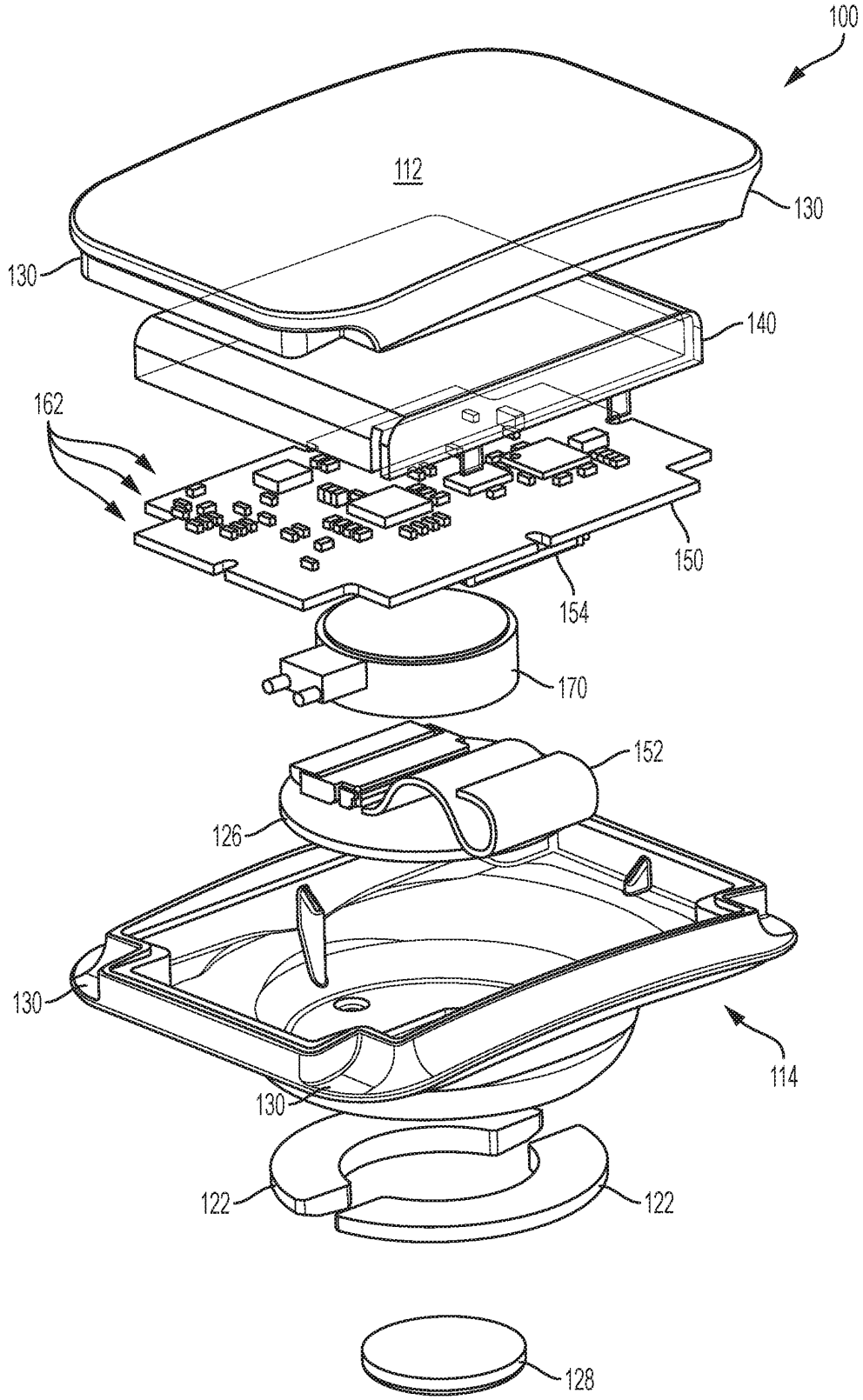
100
112
130
130
140
162
150
154
170
152
126
130
114
130
122
122
128

FIG. 3B

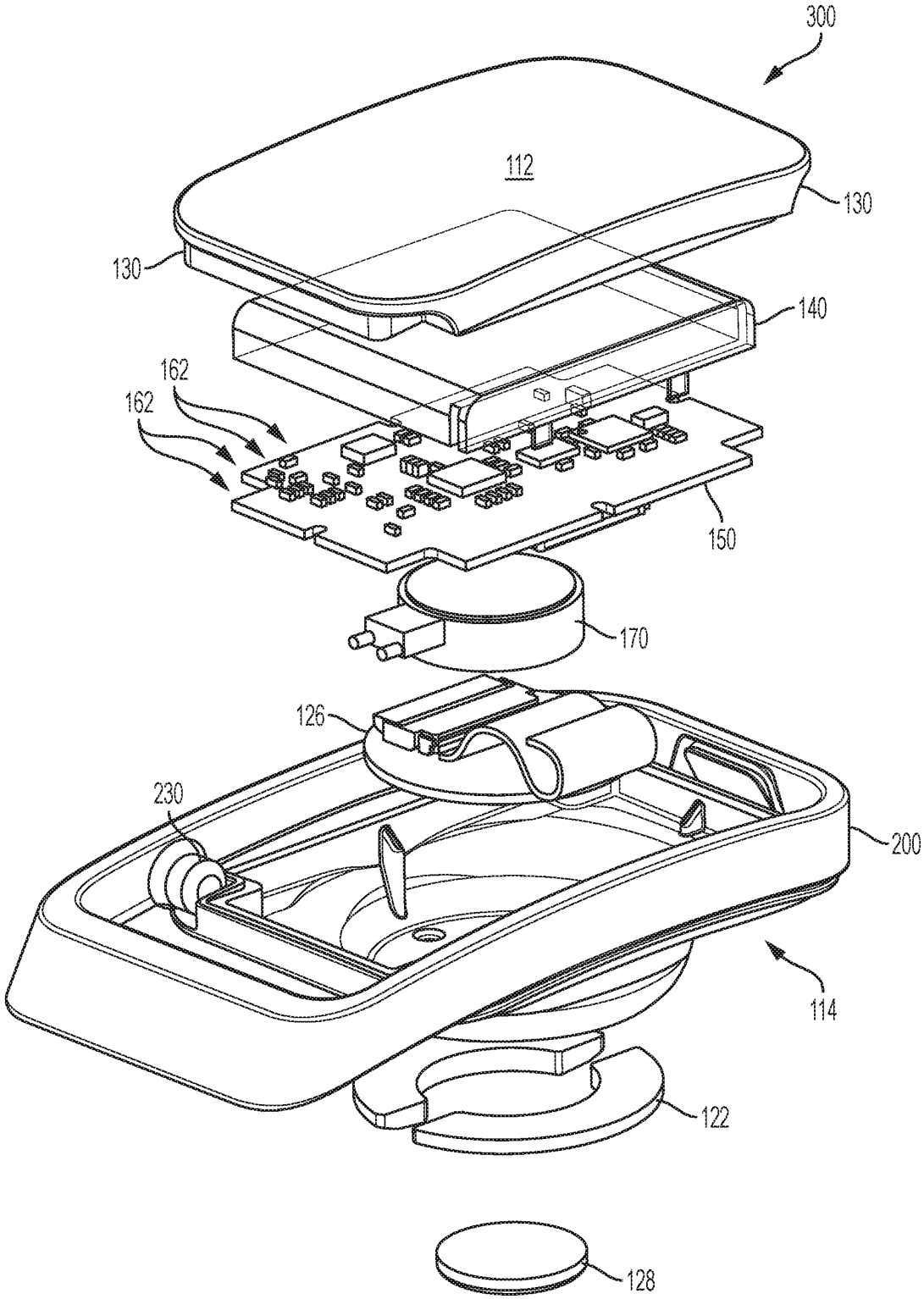

FIG. 3C

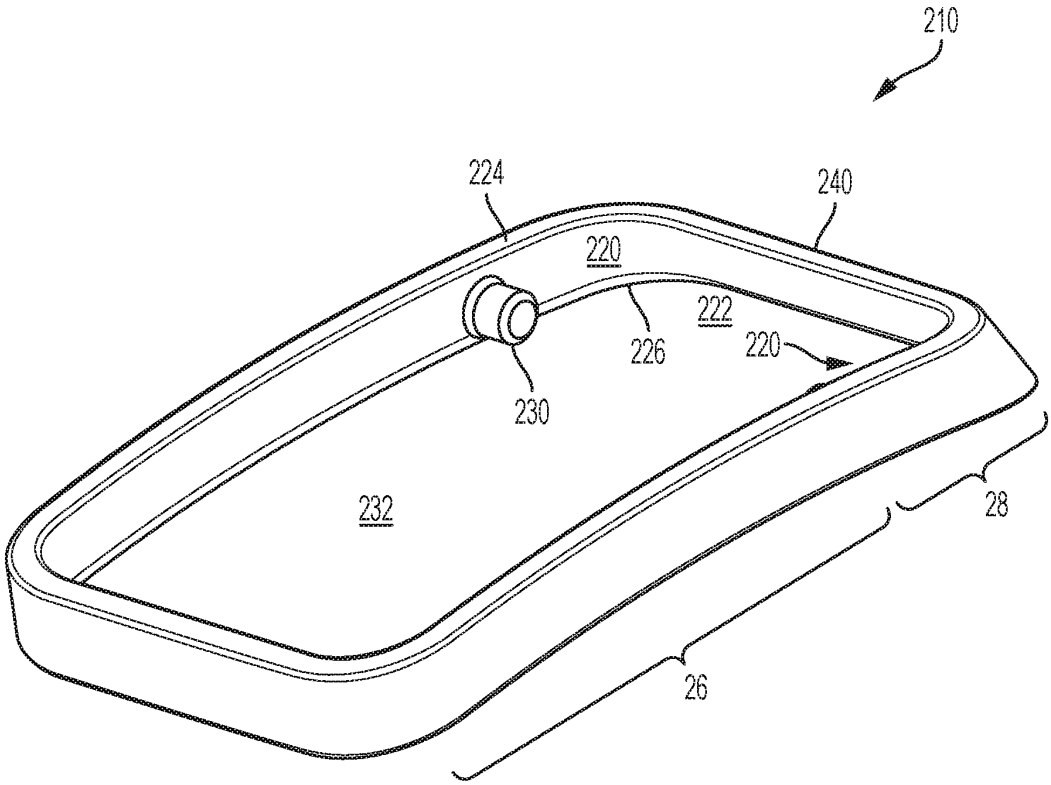

FIG. 4A

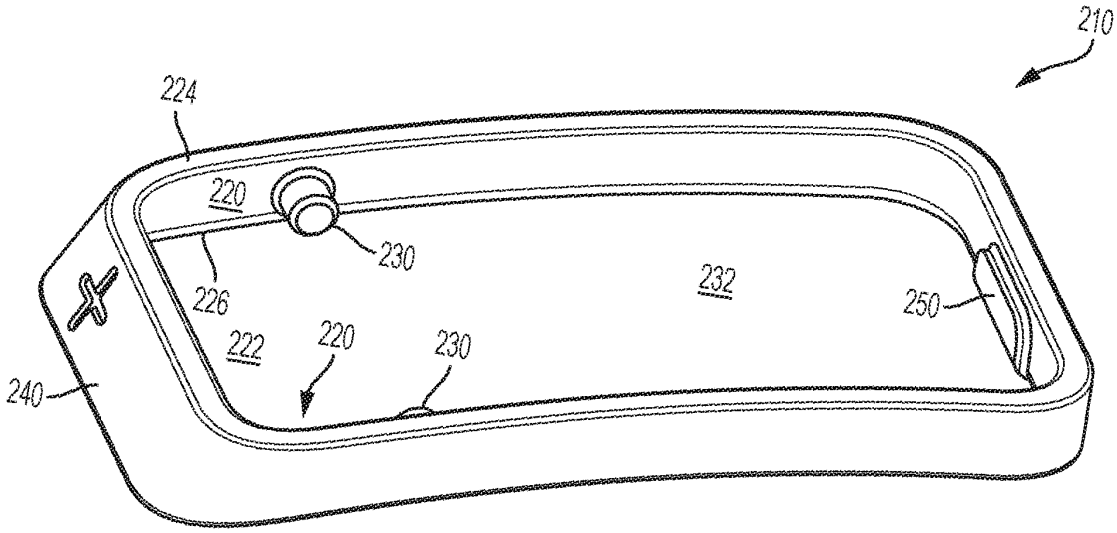

FIG. 4B

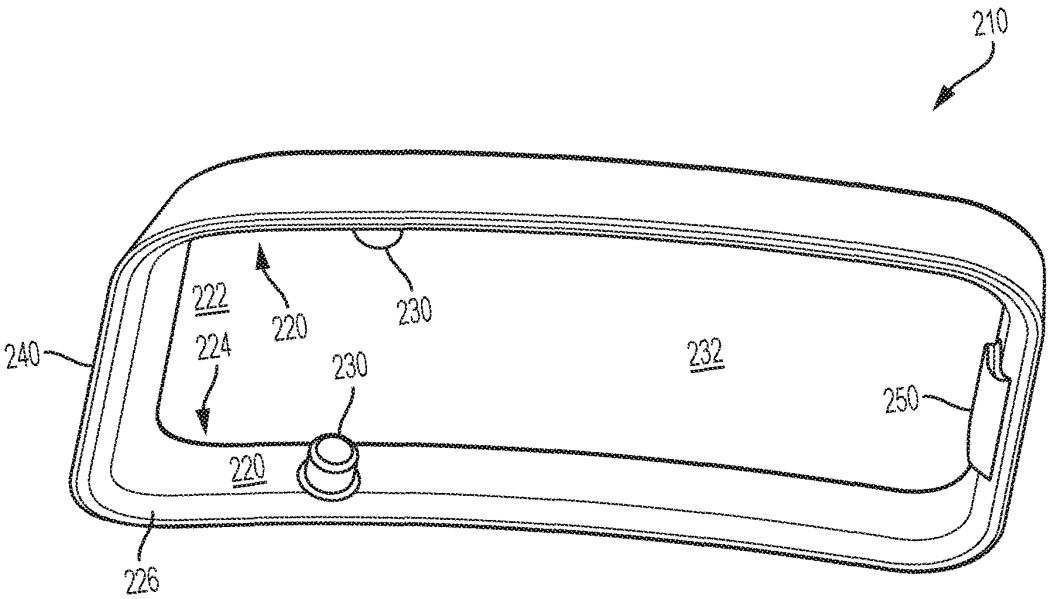

FIG. 4C

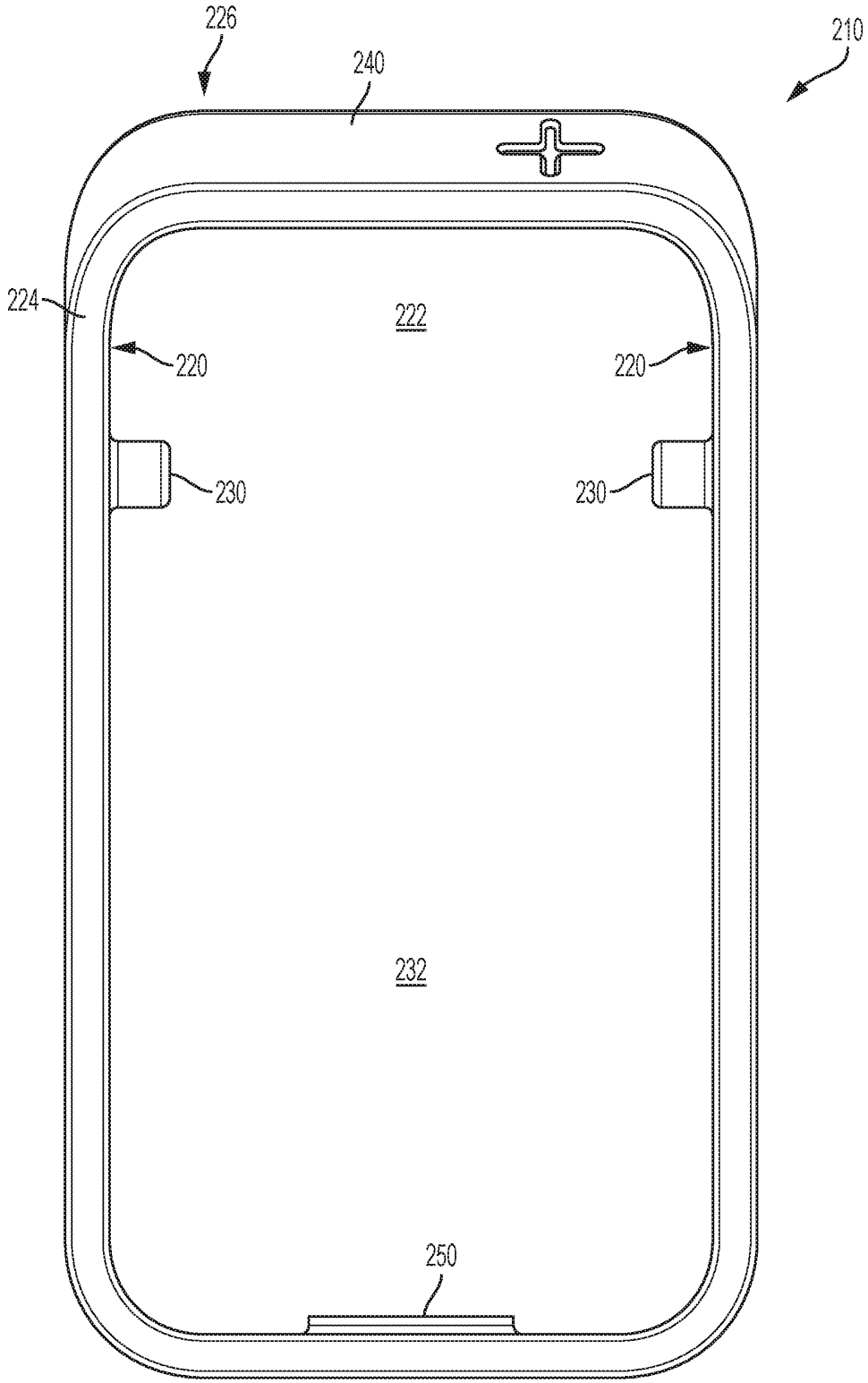

FIG. 4D

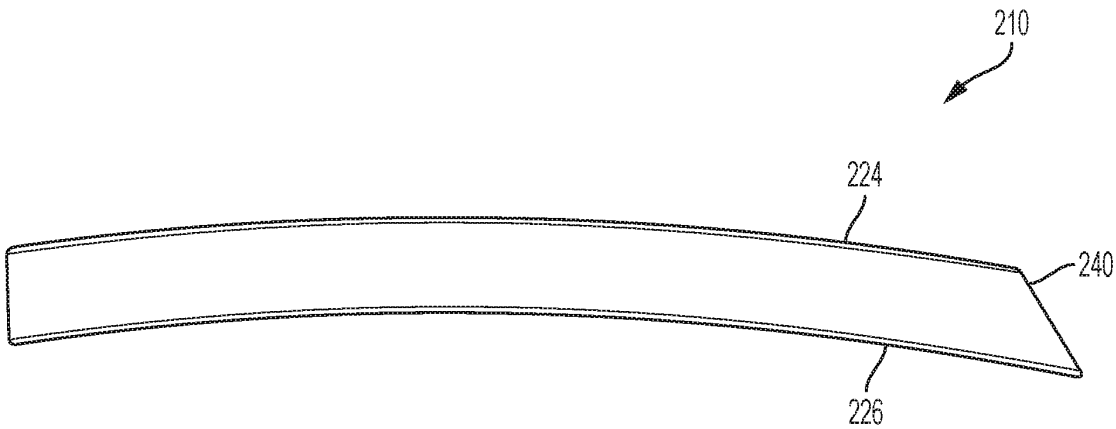

FIG. 4E

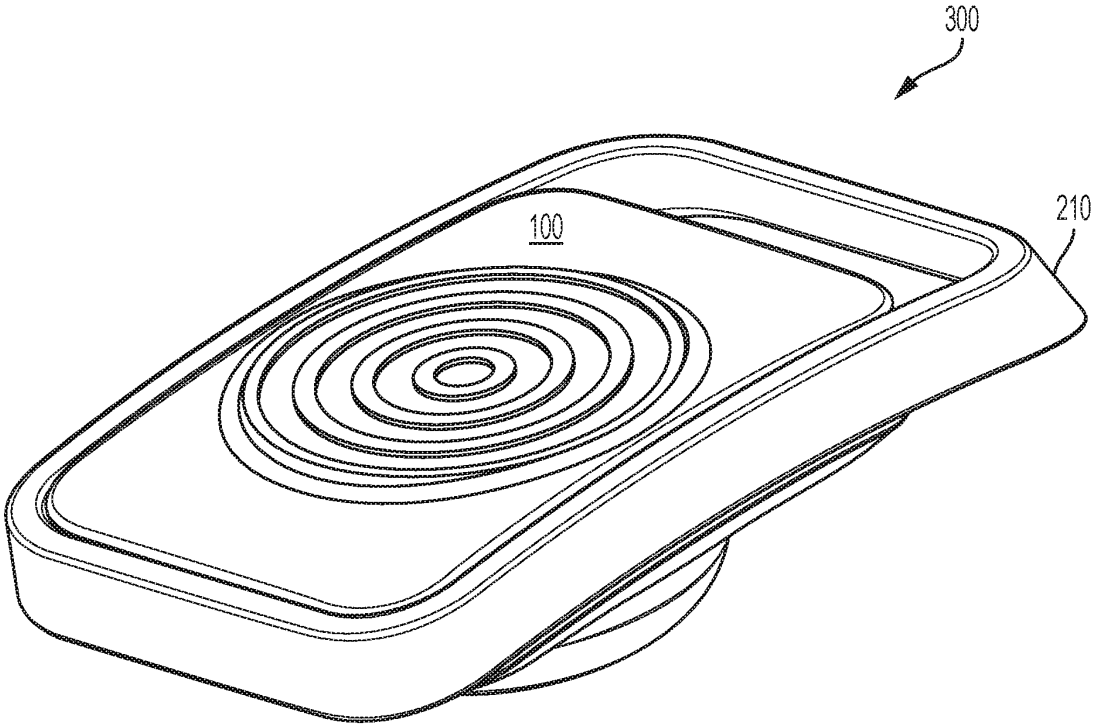

FIG. 5A

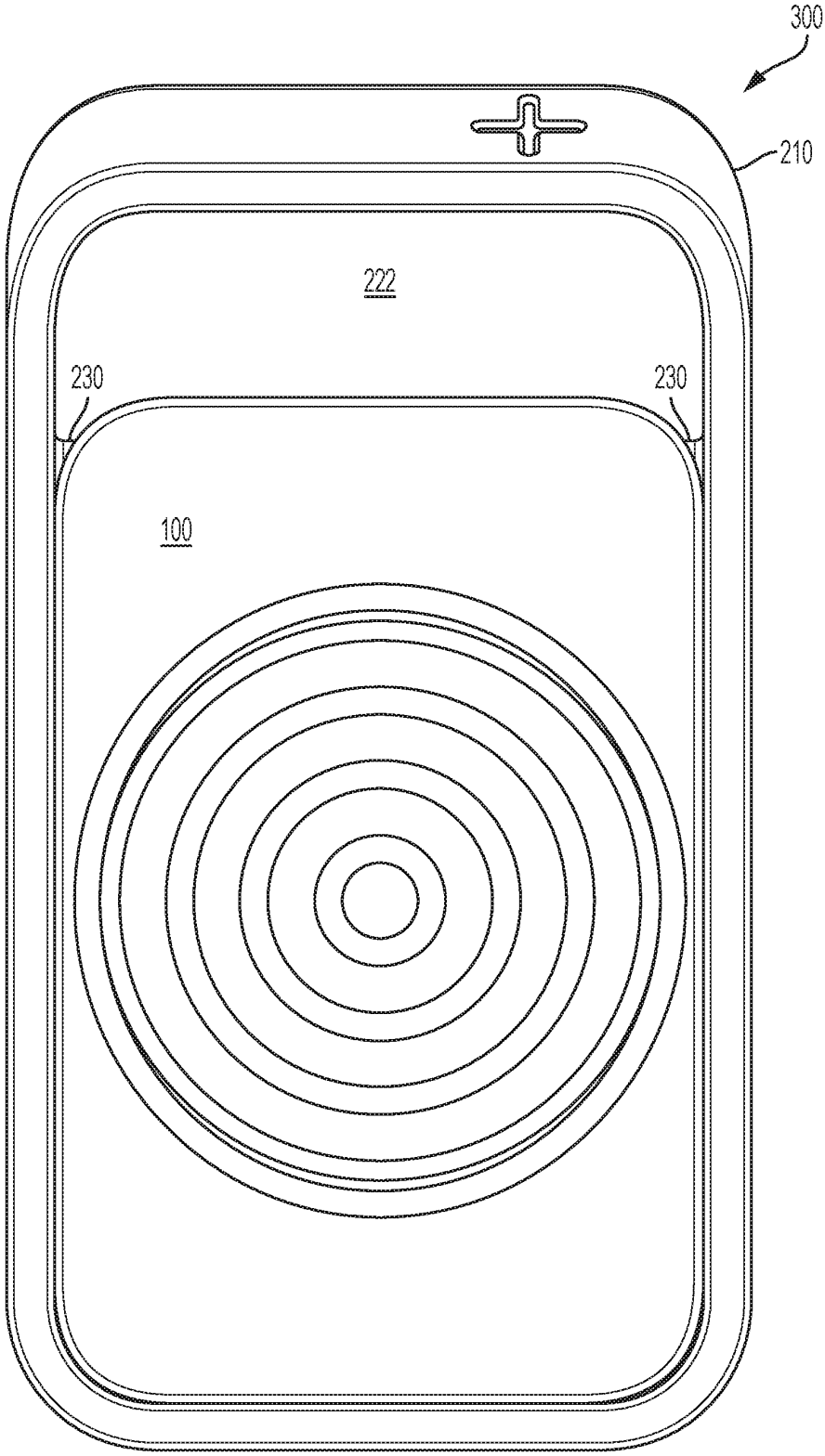

FIG. 5B

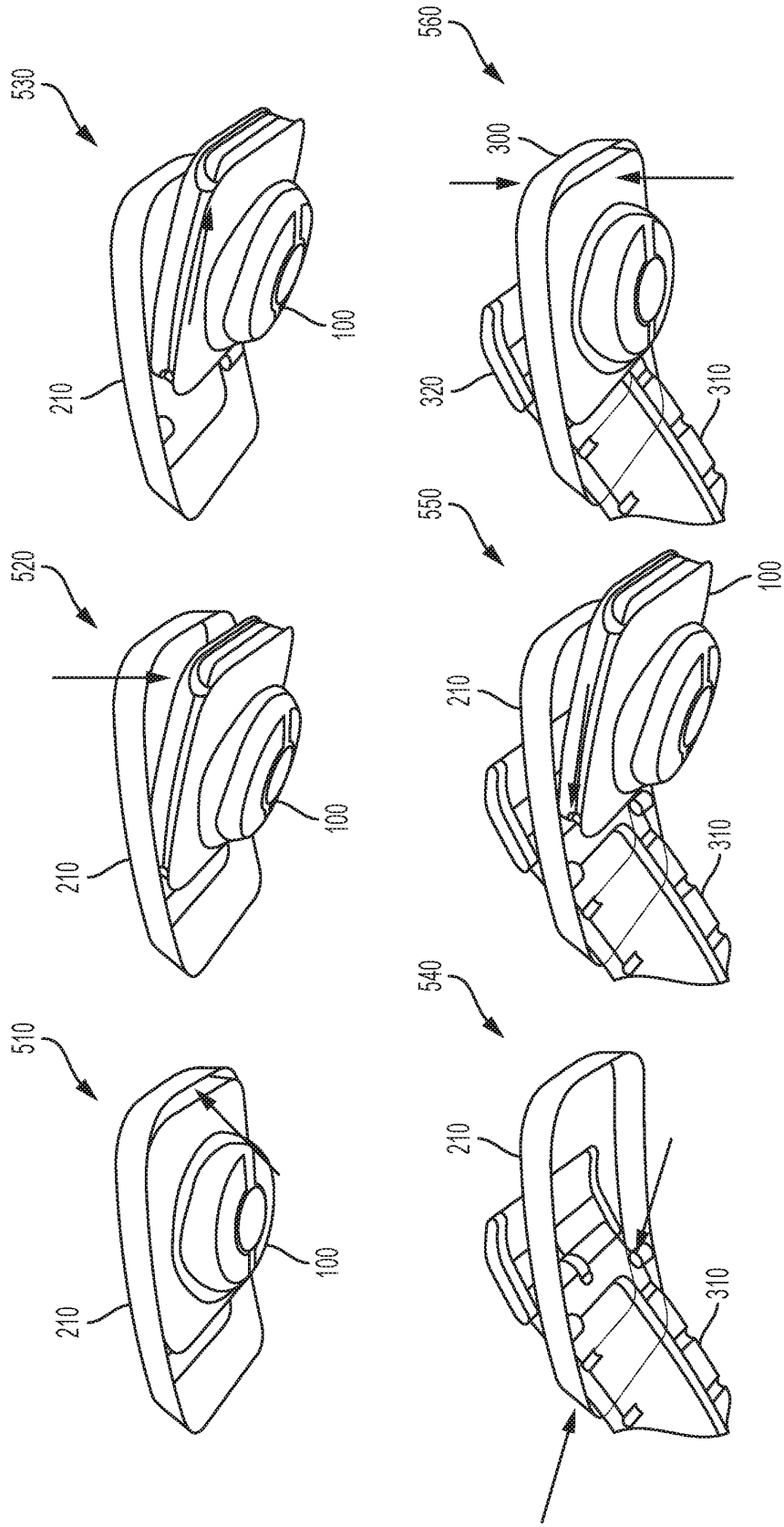

FIG. 5C

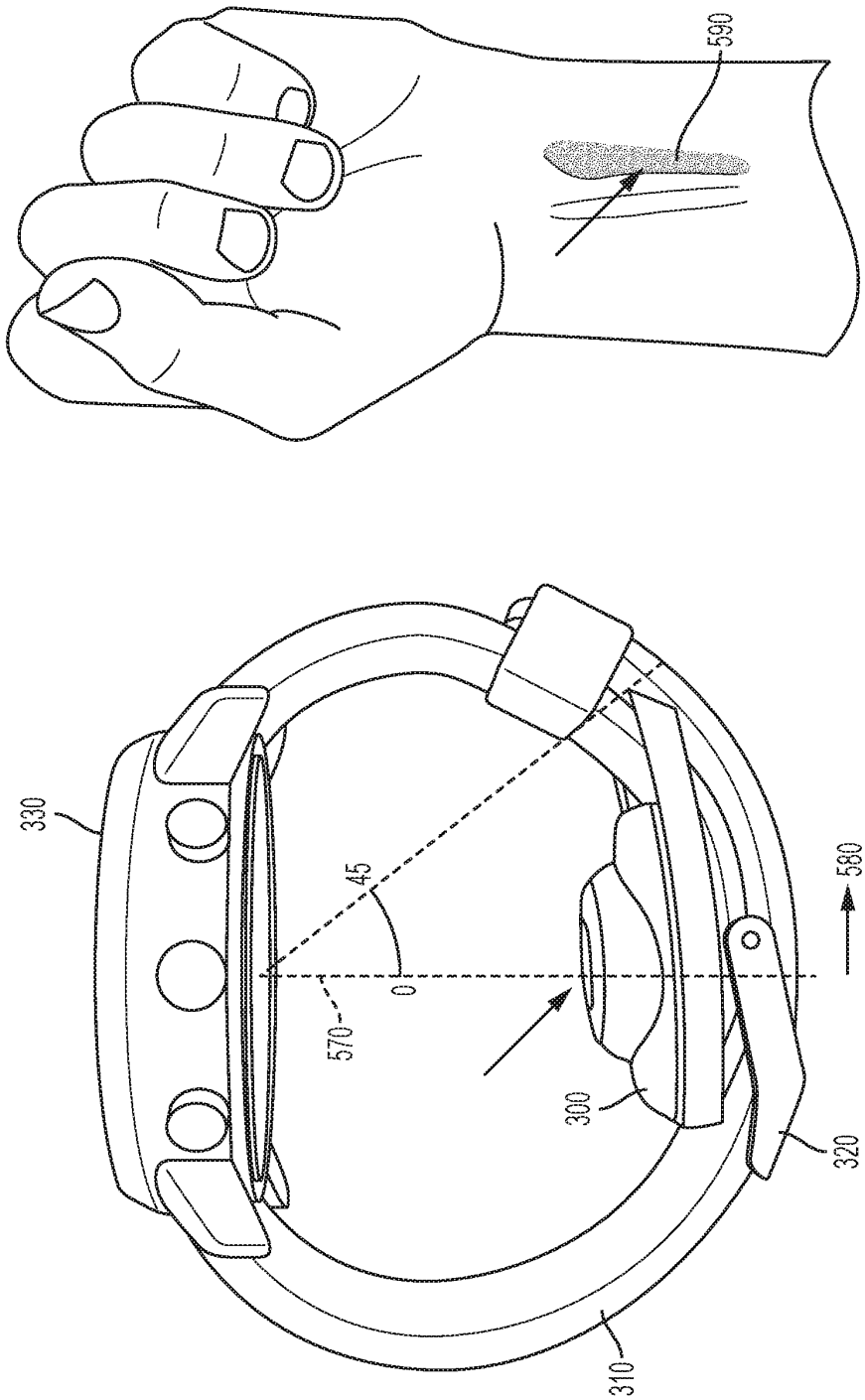

FIG. 5D

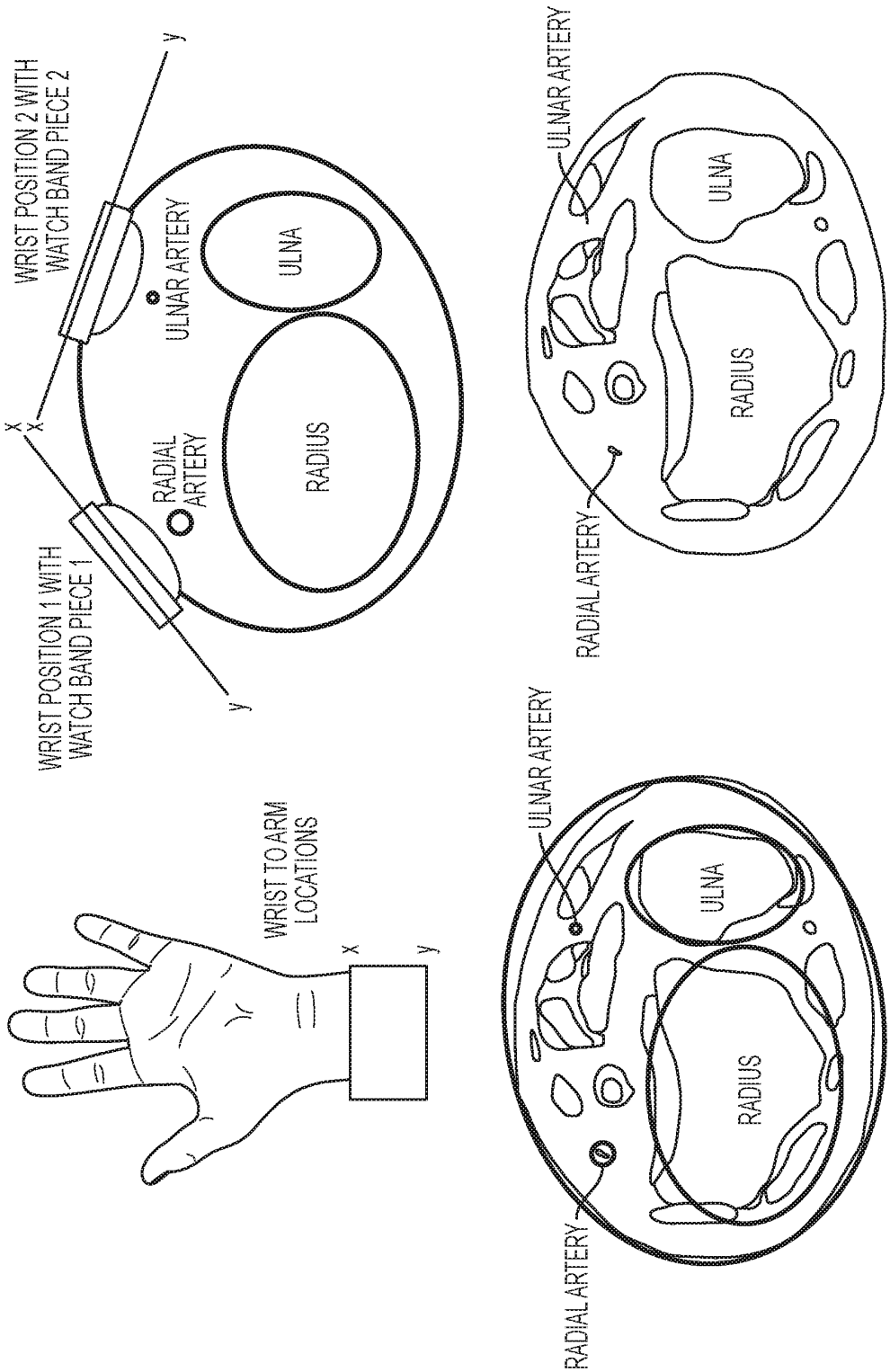
WRIST POSITION 2 WITH WATCH BAND PIECE 2
WRIST POSITION 1 WITH WATCH BAND PIECE 1
ULNAR ARTERY
RADIAL ARTERY
ULNA
RADIUS
x
y
WRIST TO ARM LOCATIONS
ULNAR ARTERY
RADIAL ARTERY
ULNA
RADIUS
ULNAR ARTERY
RADIAL ARTERY
ULNA
RADIUS

FIG. 5E

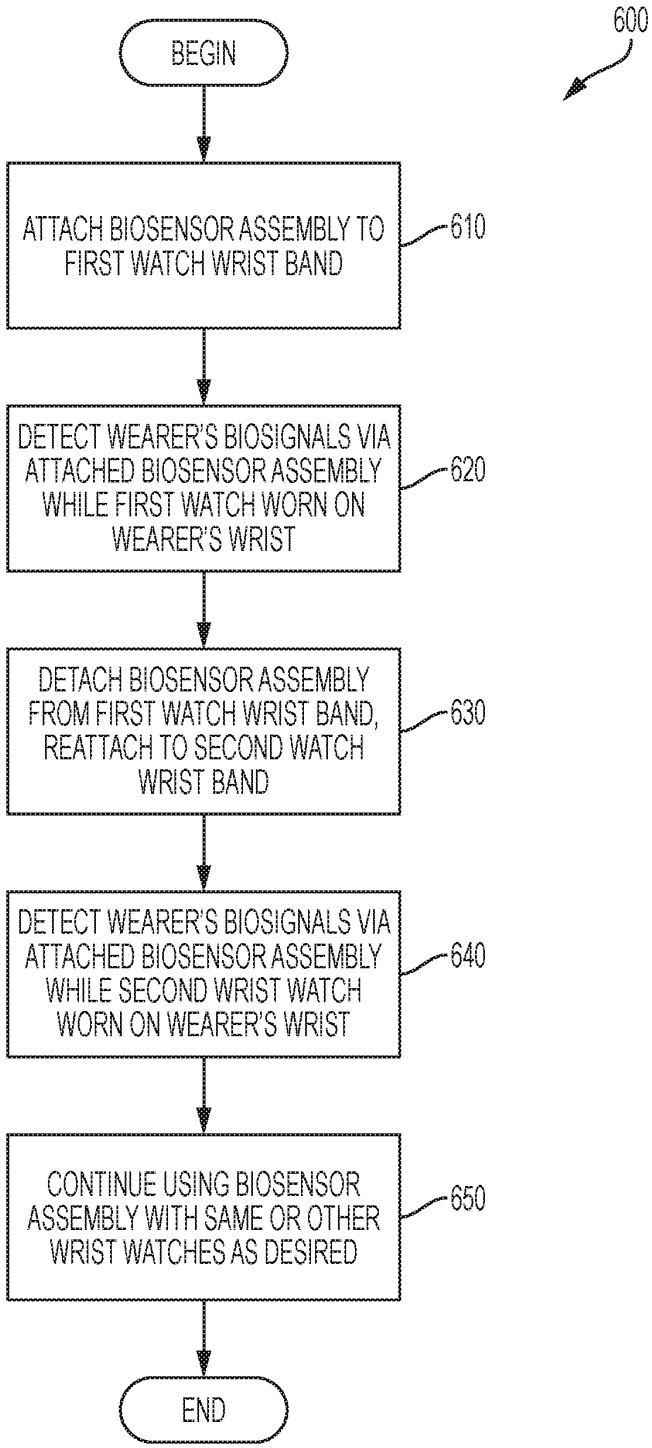
600
BEGIN
ATTACH BIOSENSOR ASSEMBLY TO FIRST WATCH WRIST BAND
610
DETECT WEARER'S BIOSIGNALS VIA ATTACHED BIOSENSOR ASSEMBLY WHILE FIRST WATCH WORN ON WEARER'S WRIST
620
DETACH BIOSENSOR ASSEMBLY FROM FIRST WATCH WRIST BAND, REATTACH TO SECOND WATCH WRIST BAND
630
DETECT WEARER'S BIOSIGNALS VIA ATTACHED BIOSENSOR ASSEMBLY WHILE SECOND WRIST WATCH WORN ON WEARER'S WRIST
640
CONTINUE USING BIOSENSOR ASSEMBLY WITH SAME OR OTHER WRIST WATCHES AS DESIRED
650
END

FIG. 6

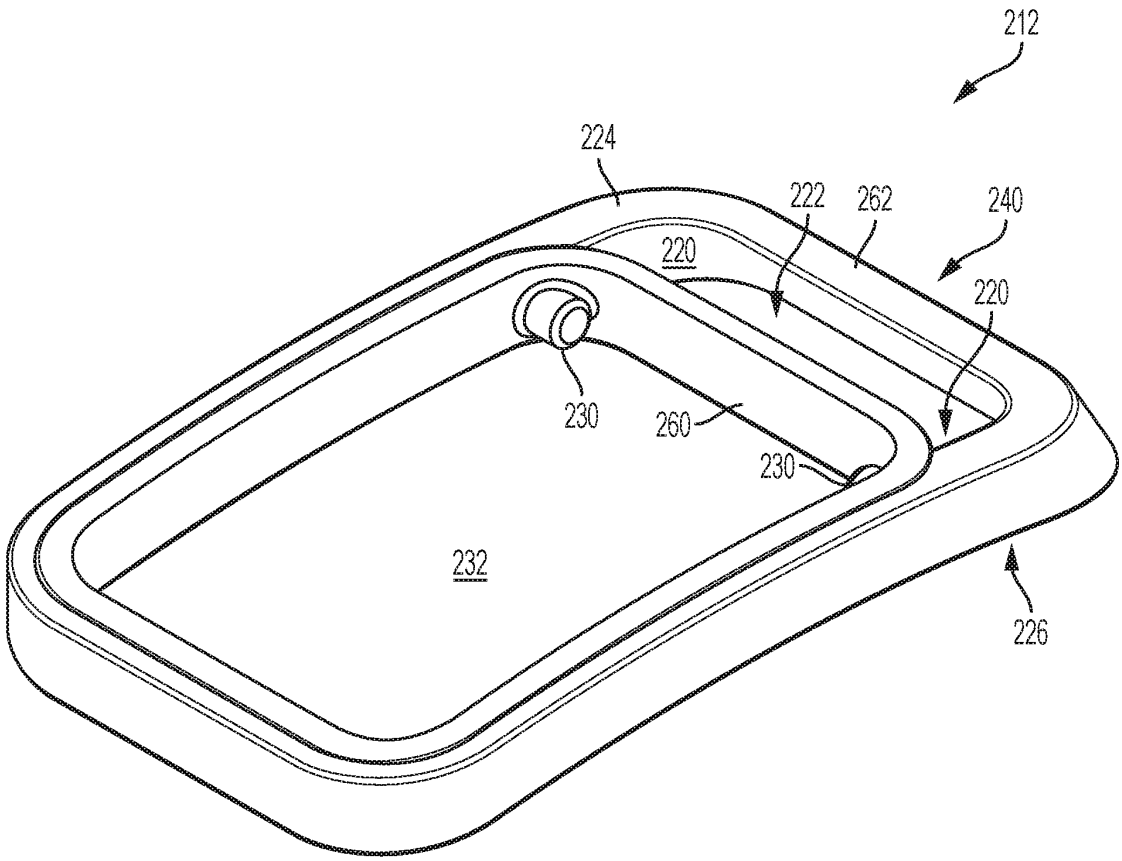

FIG. 7A

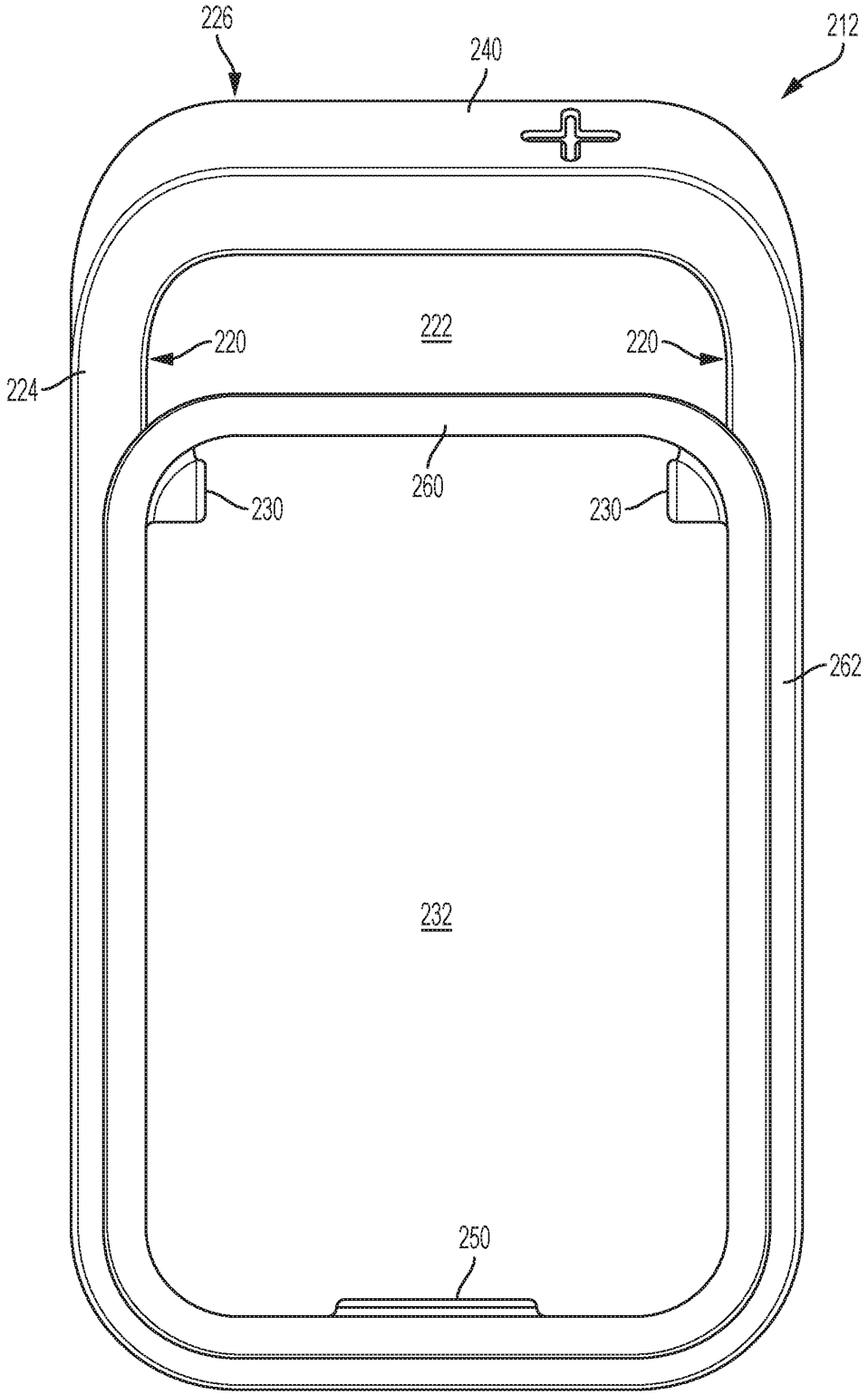

FIG. 7B

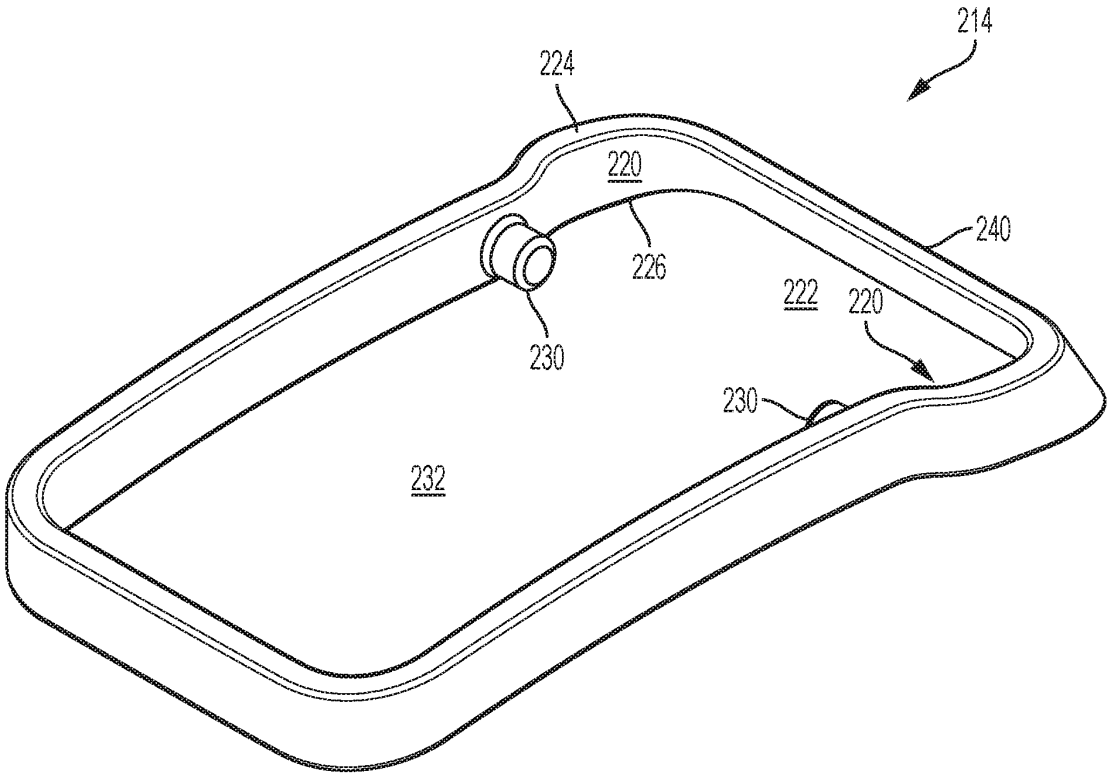

FIG. 8A

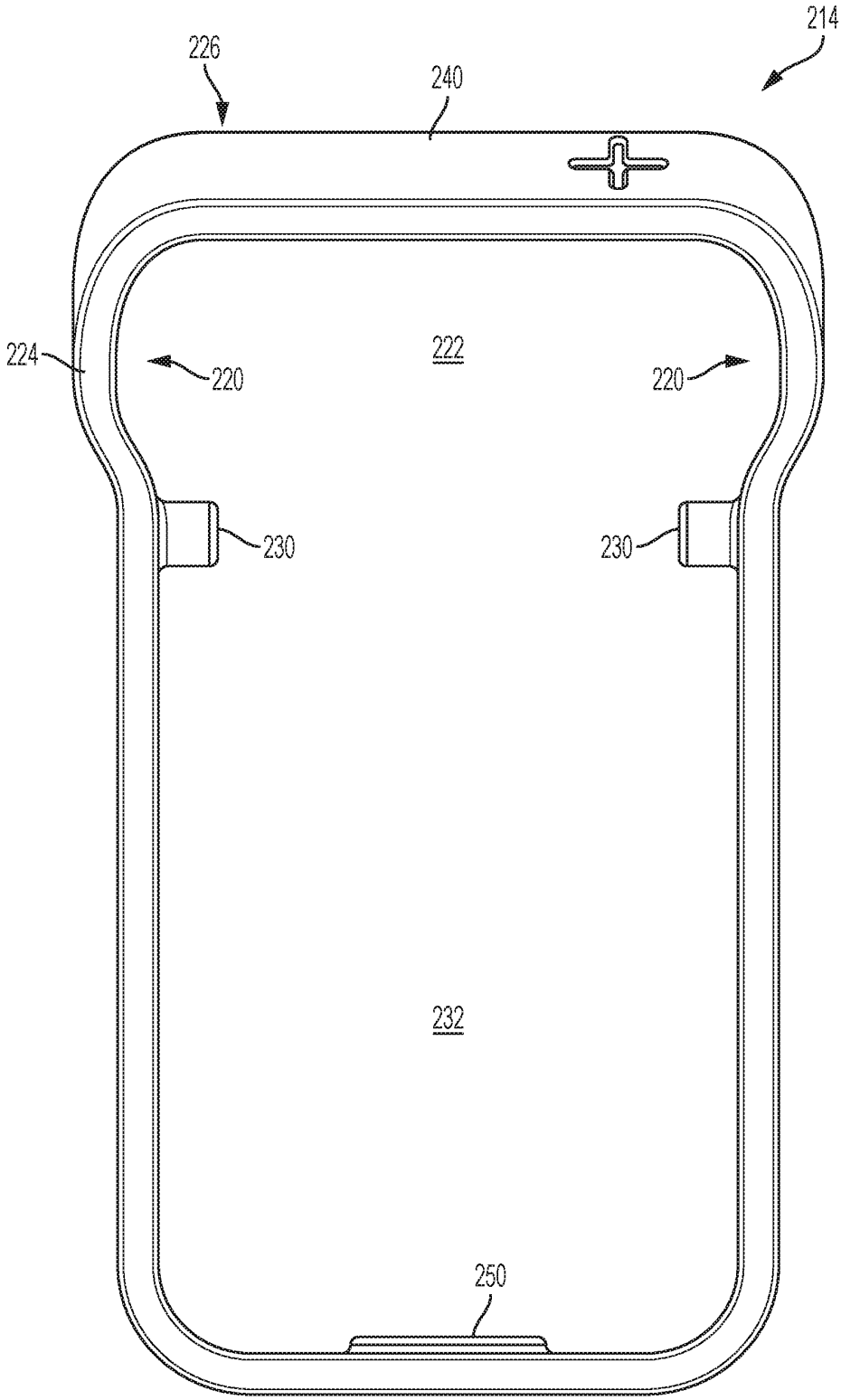

FIG. 8B

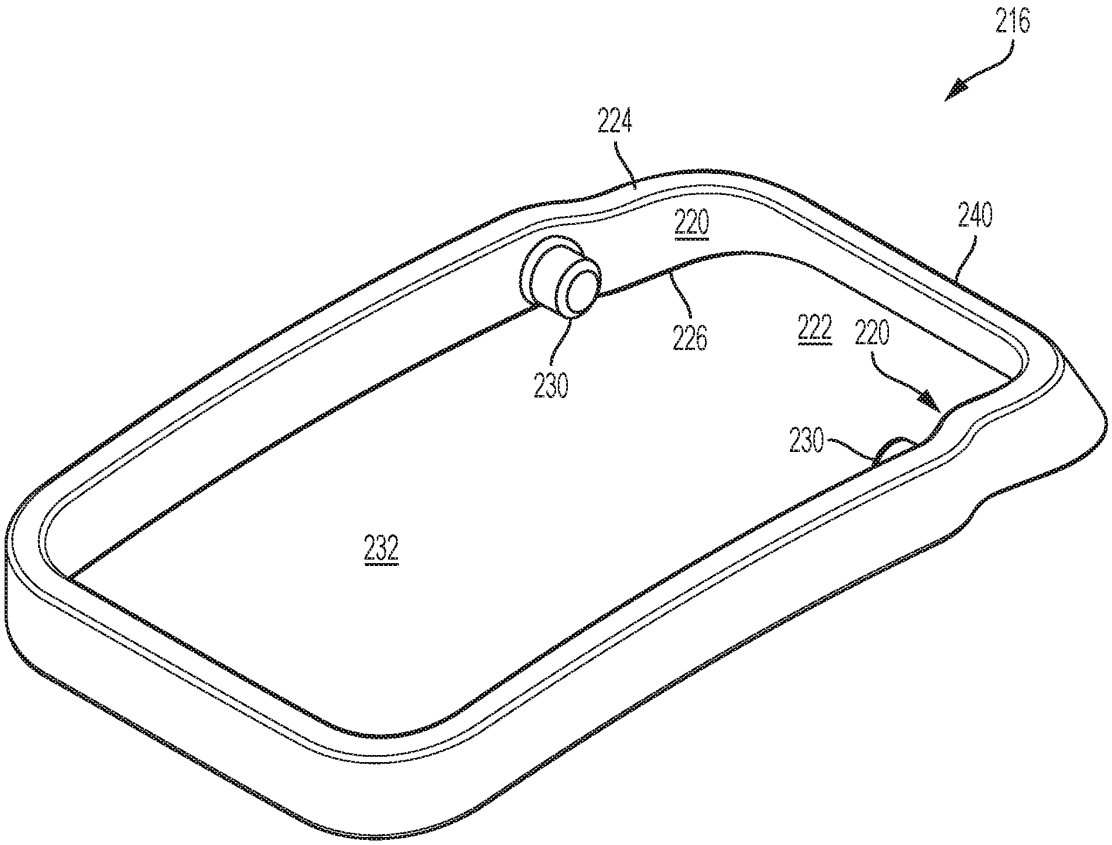

FIG. 9A

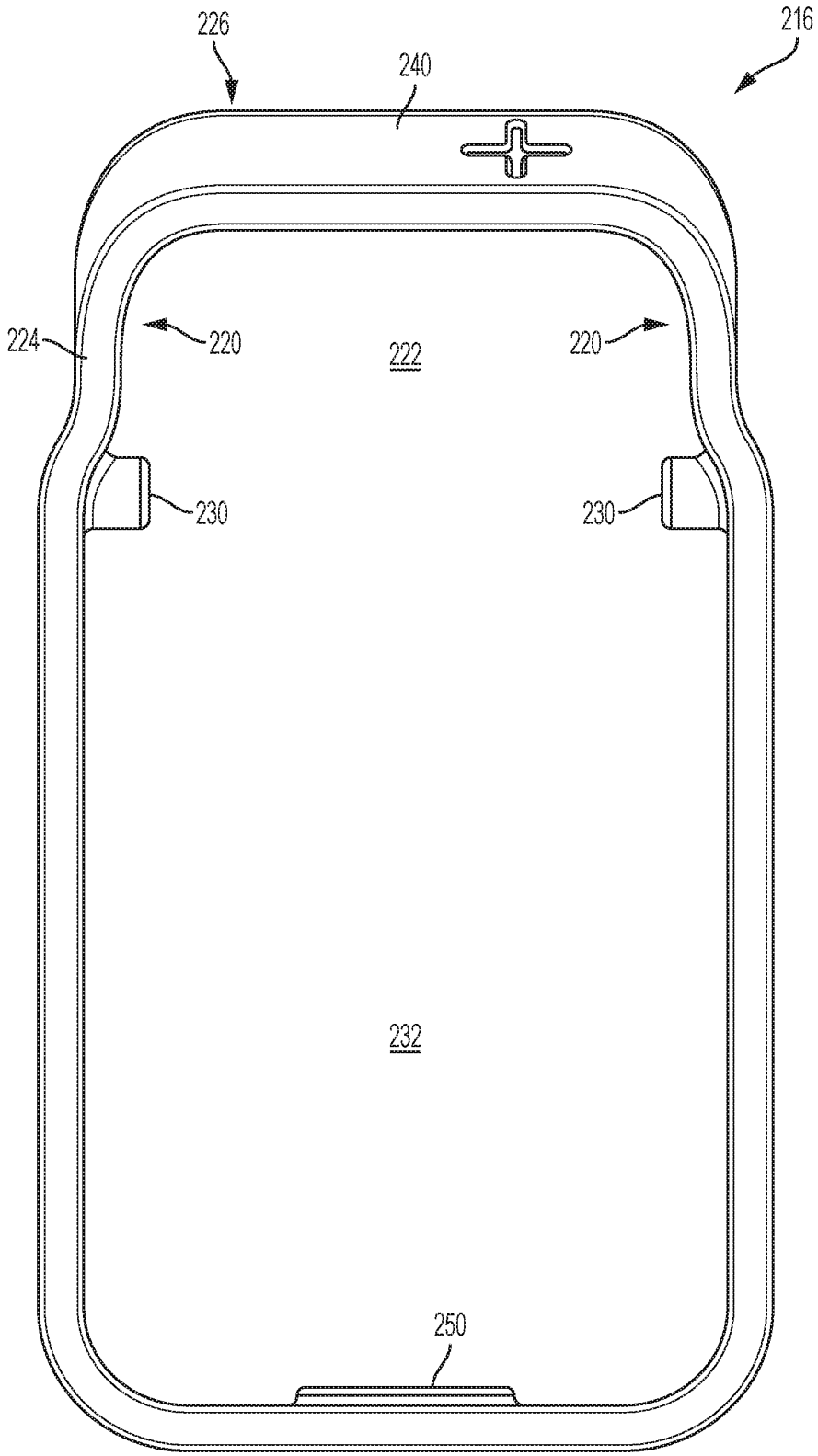

FIG. 9B

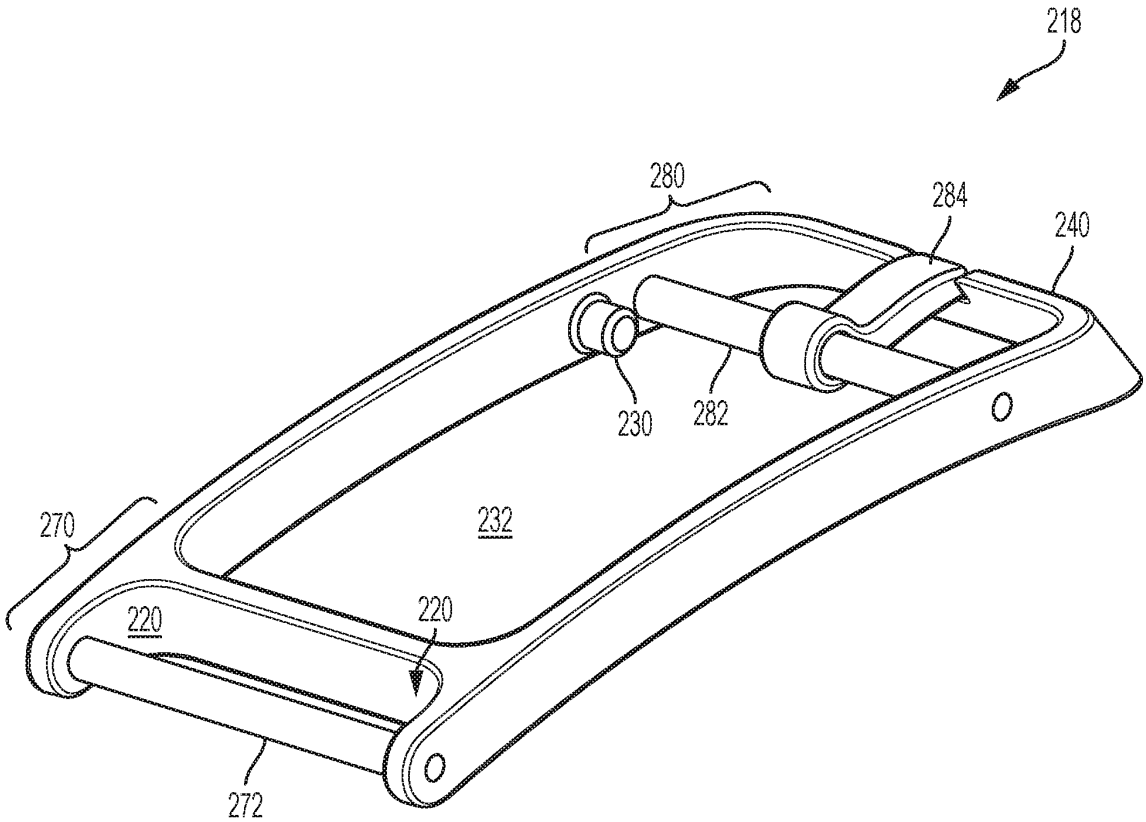

FIG. 10A

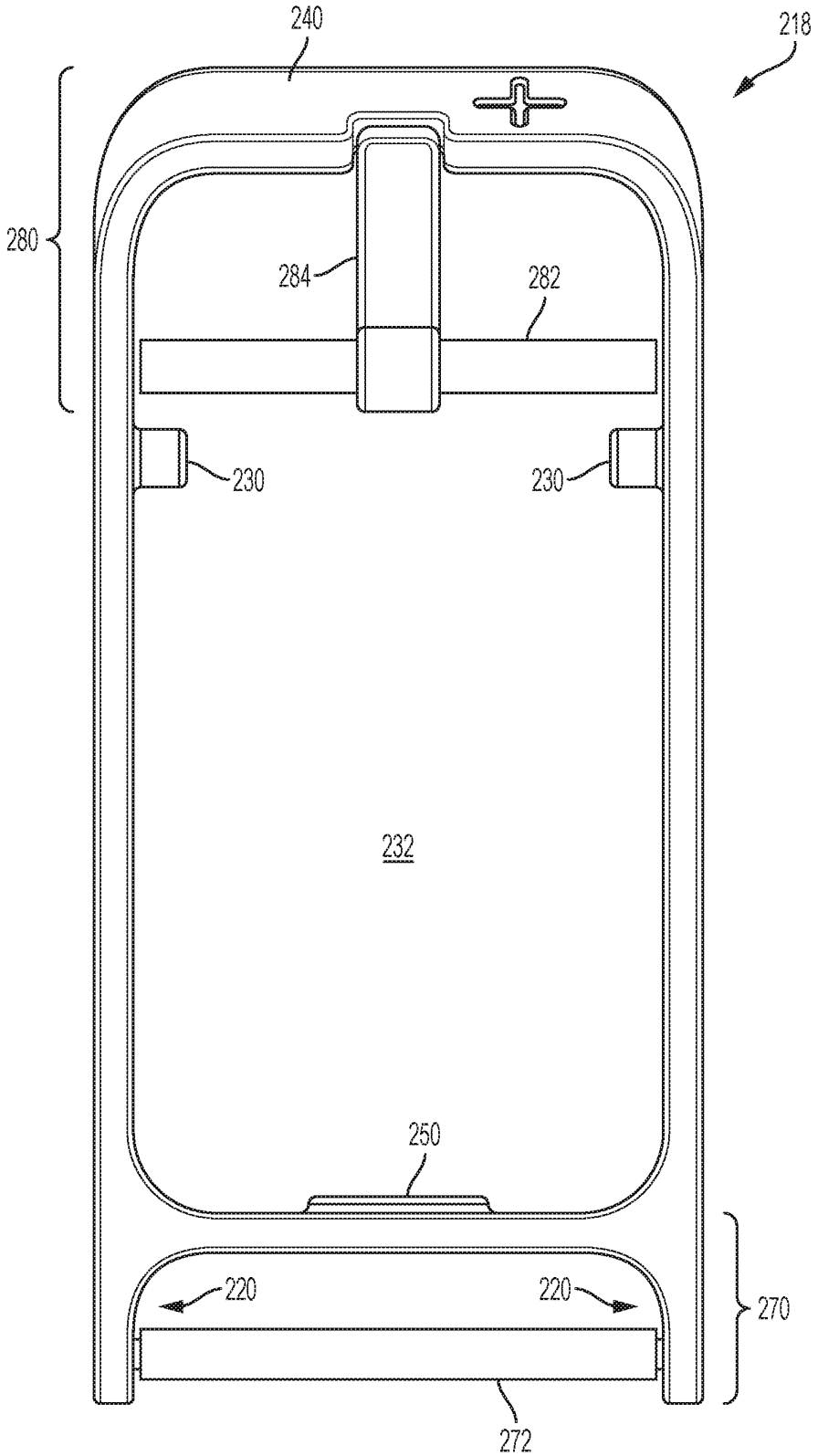

FIG. 10B

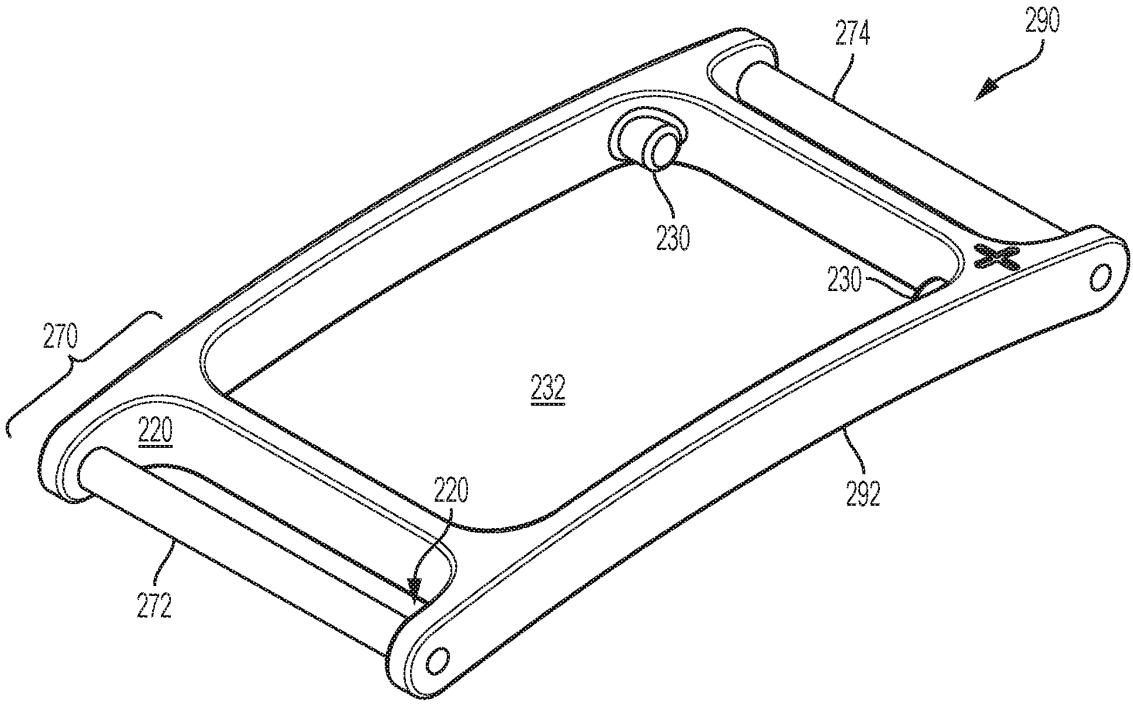

FIG. 11A

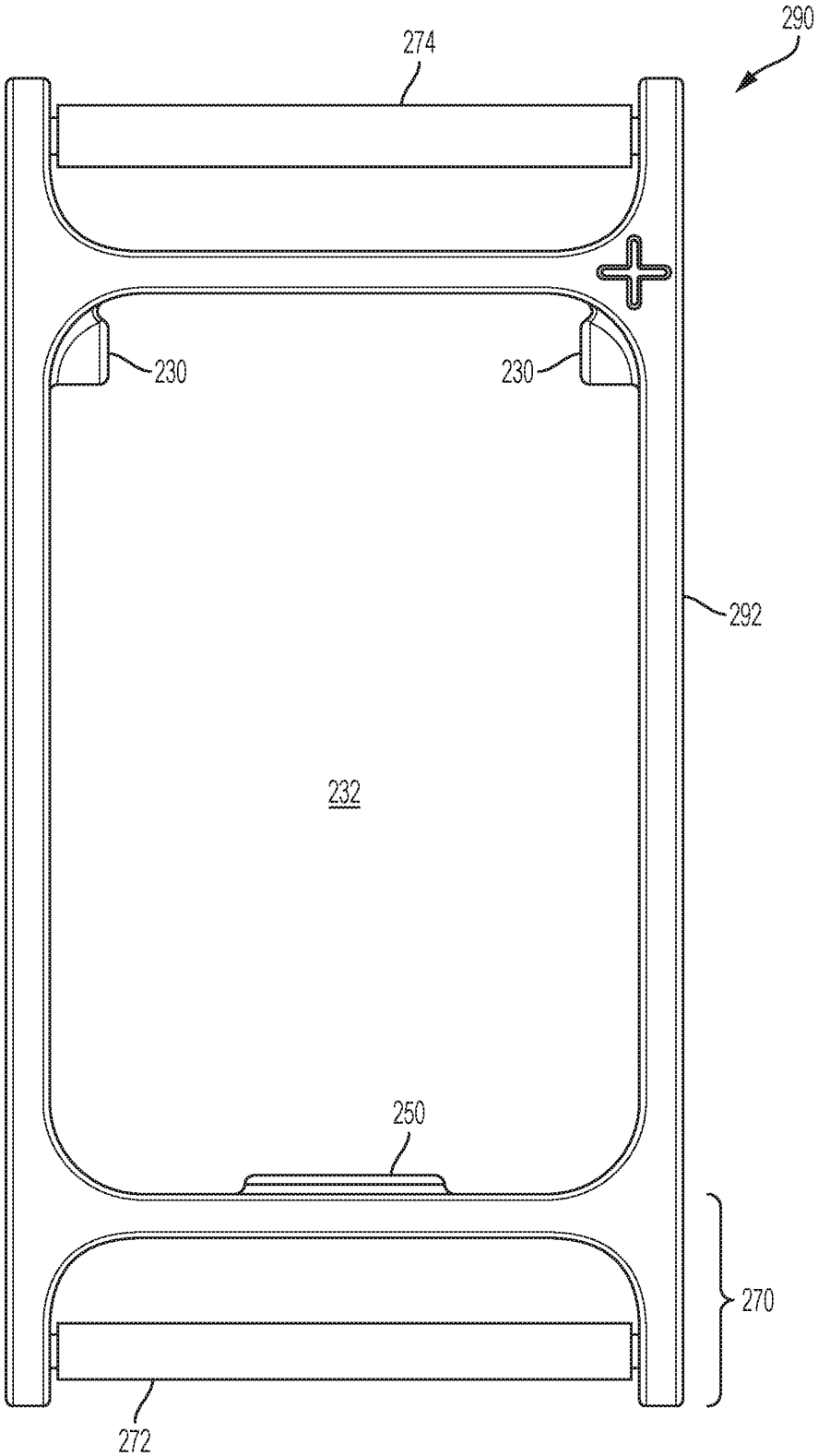

FIG. 11B

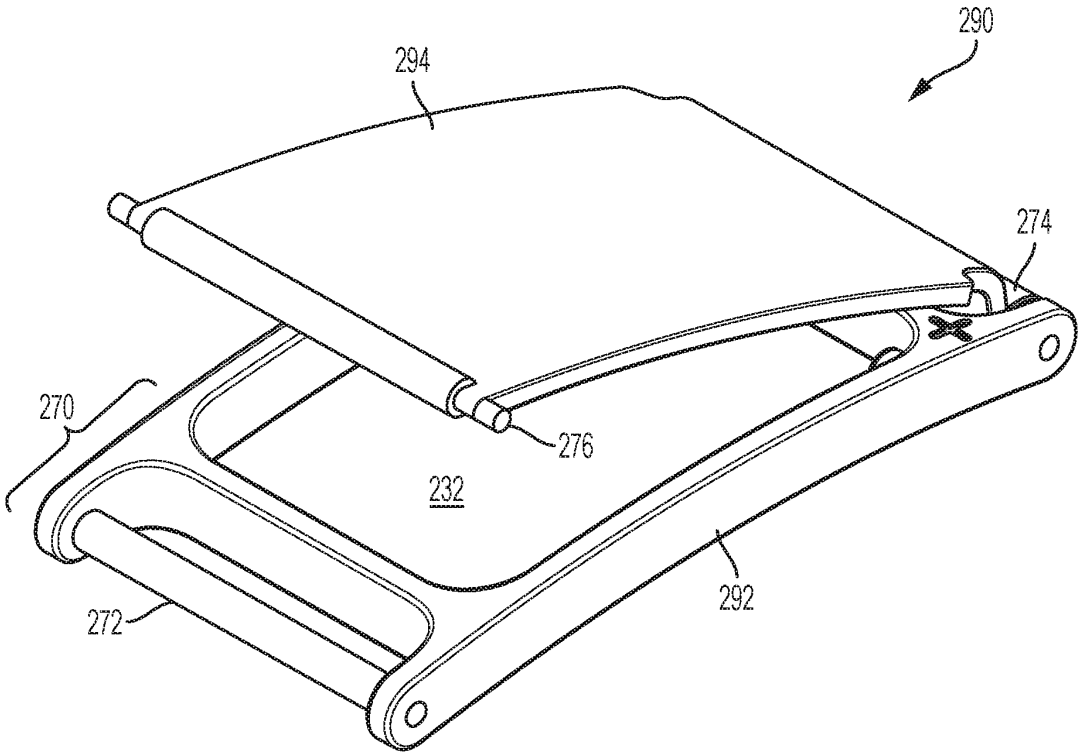

FIG. 11C

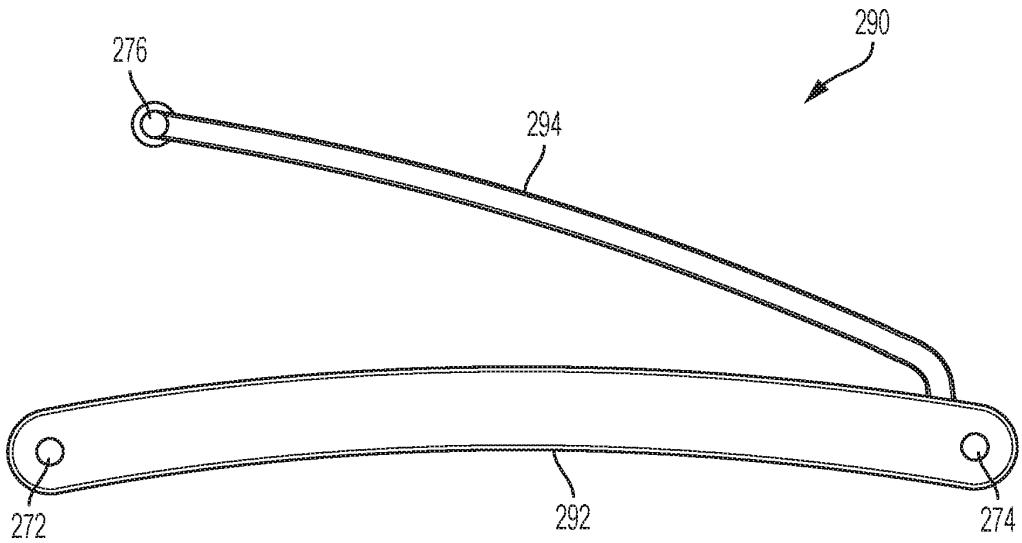

FIG. 11D

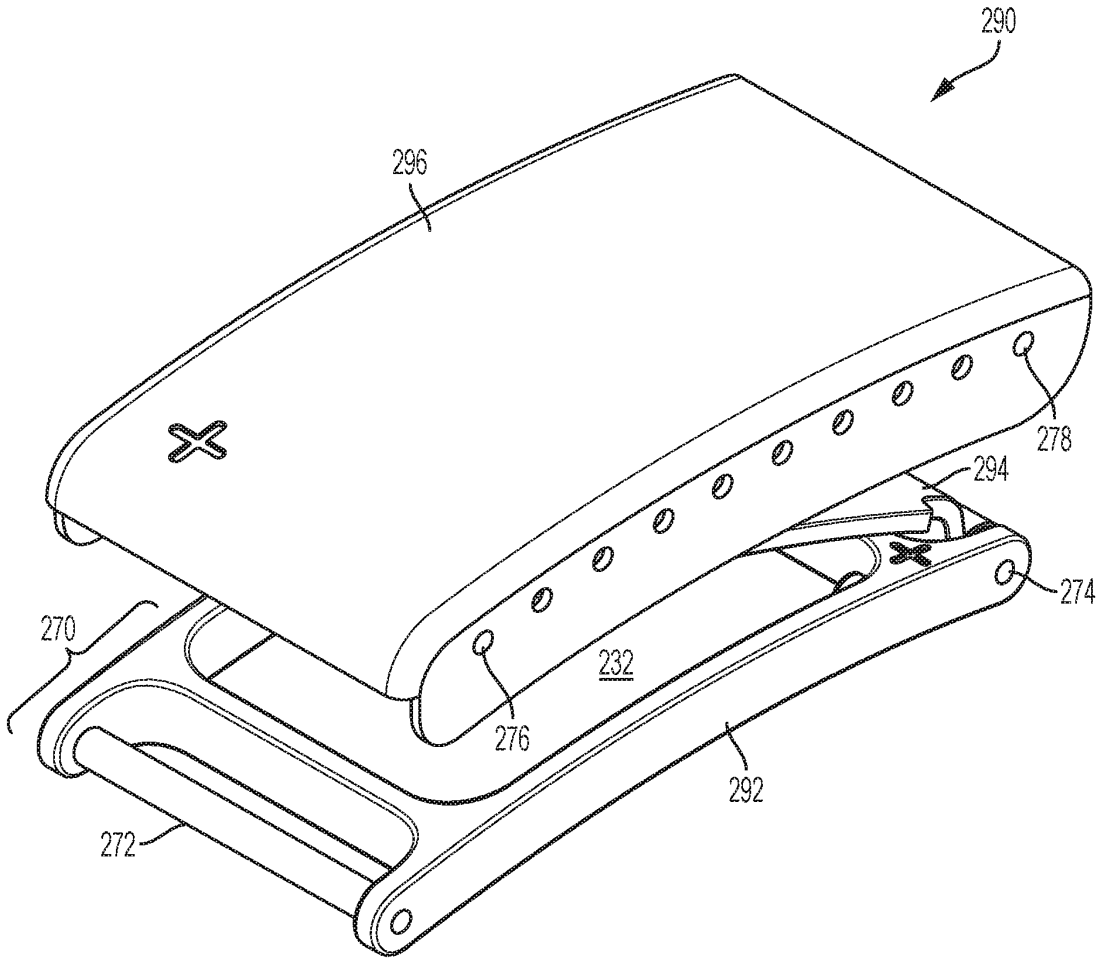

FIG. 11E

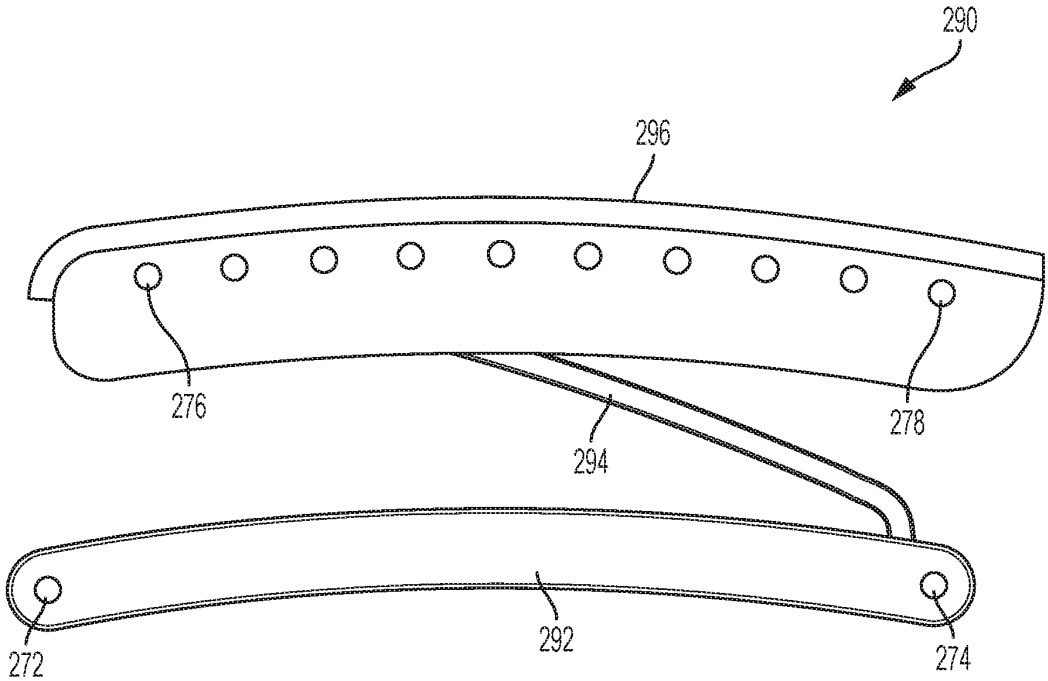

FIG. 11F

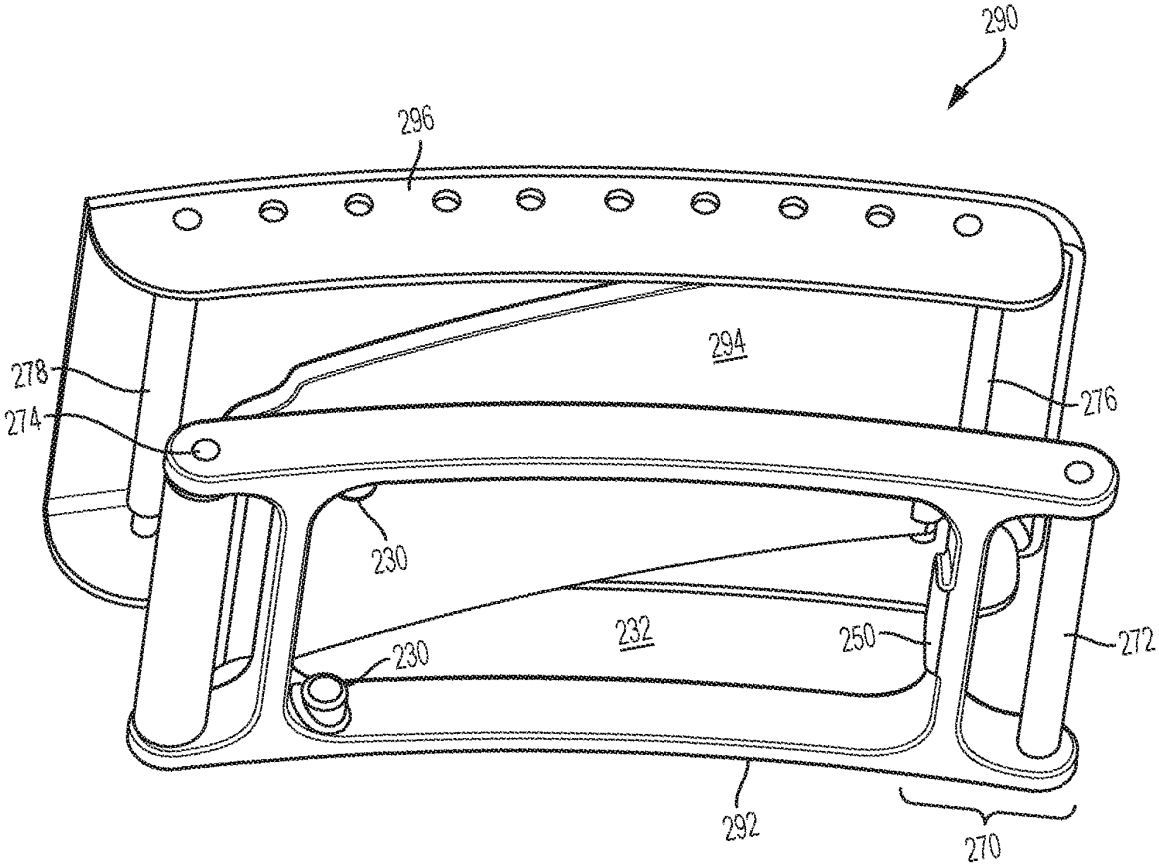

FIG. 11G

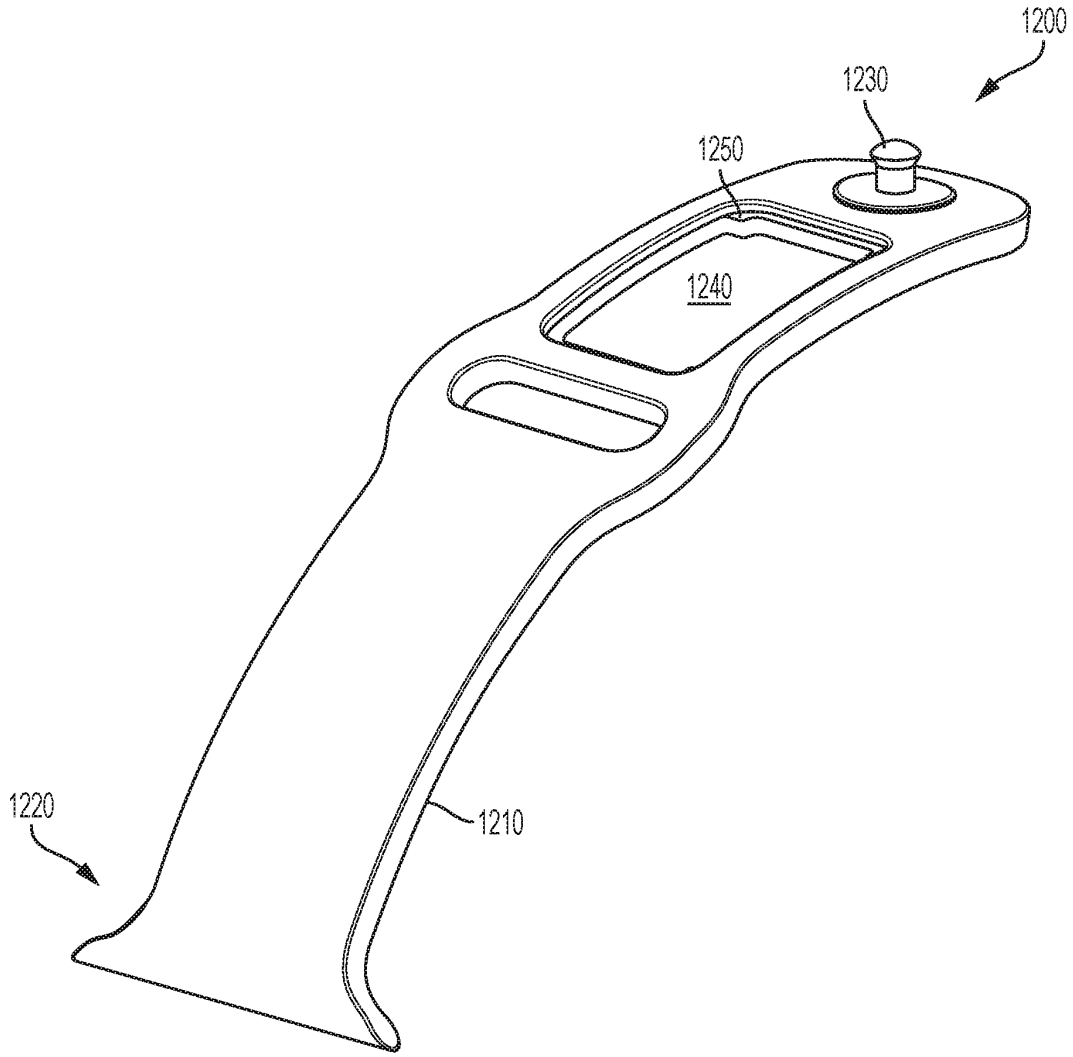

FIG. 12A

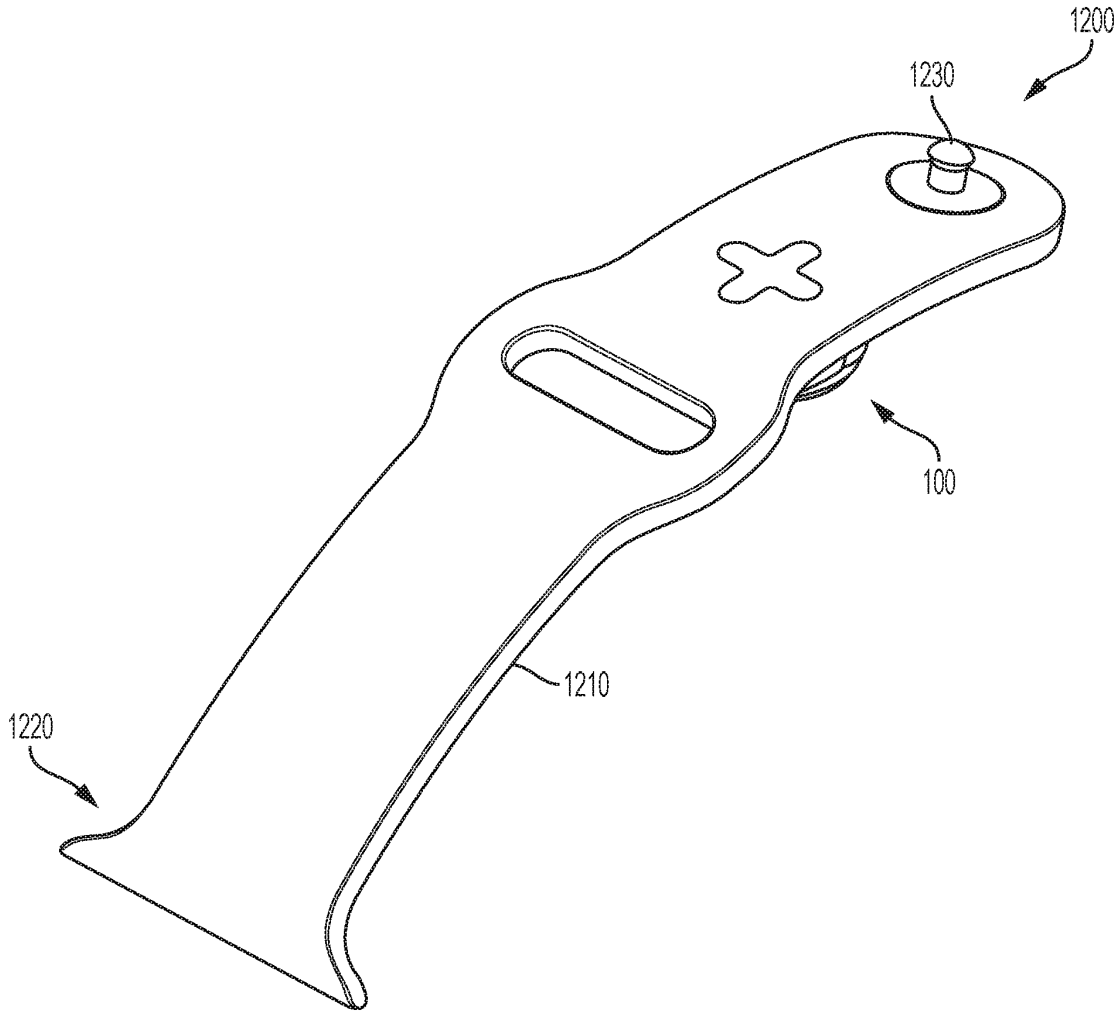

FIG. 12B

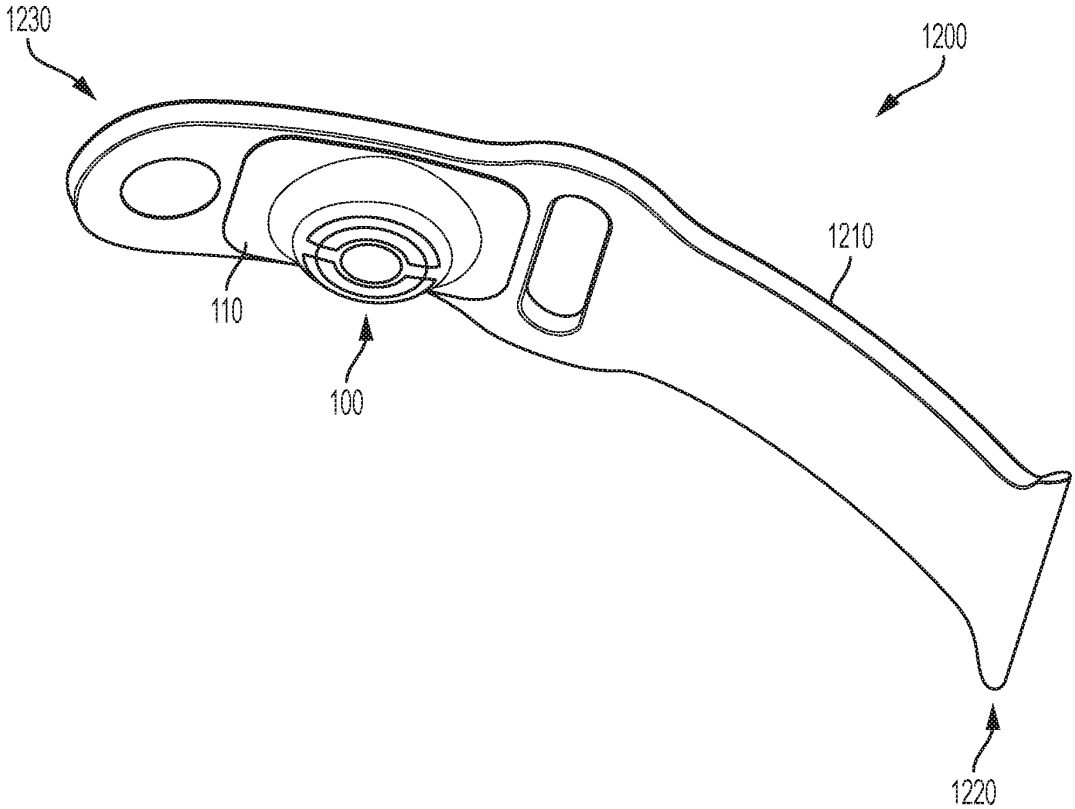

FIG. 12C

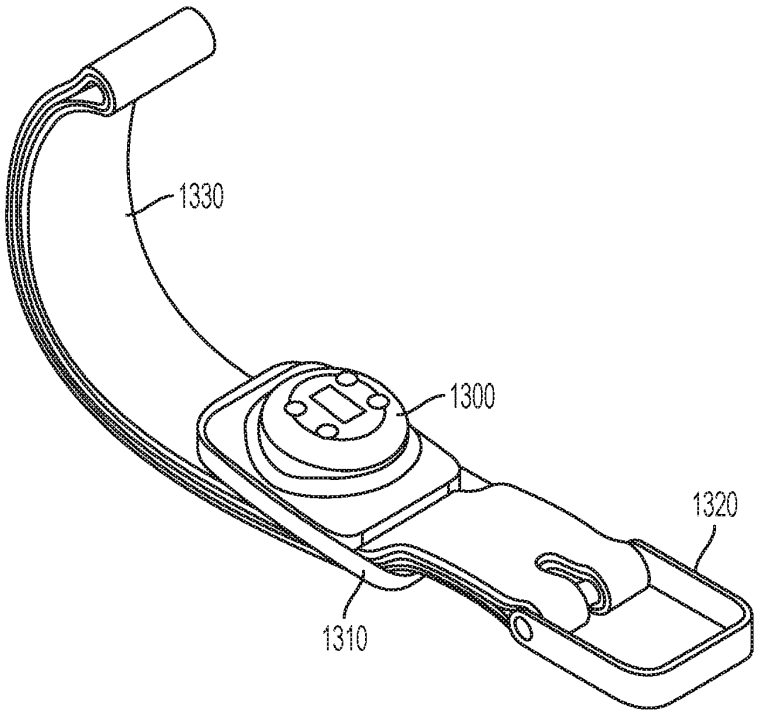

FIG. 13A

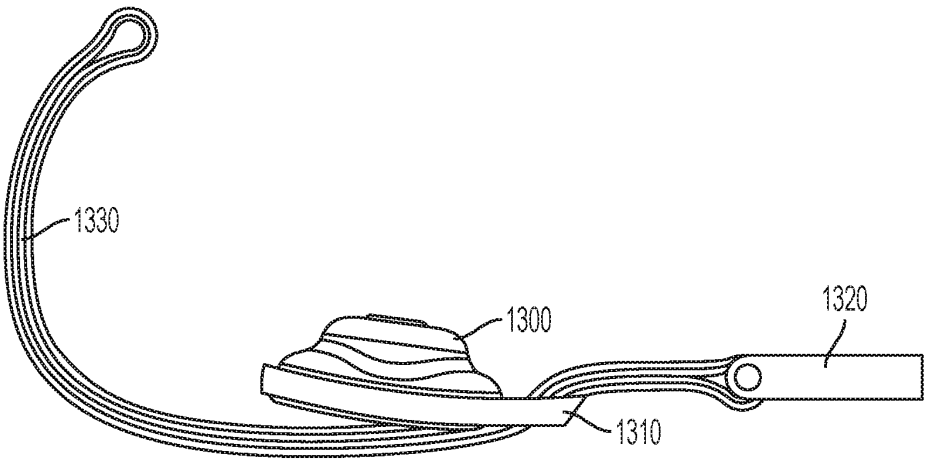

FIG. 13B

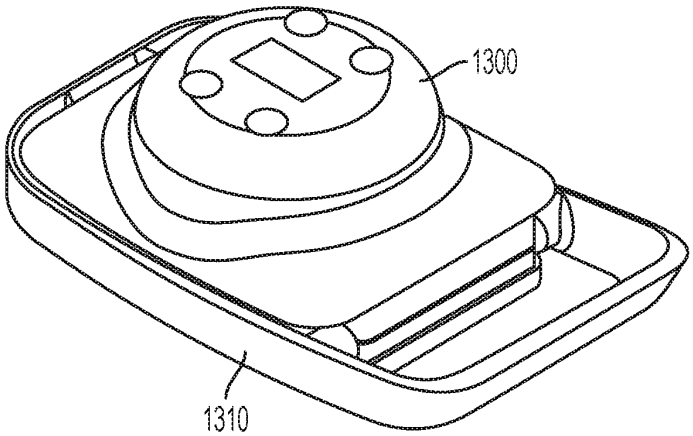

FIG. 13C

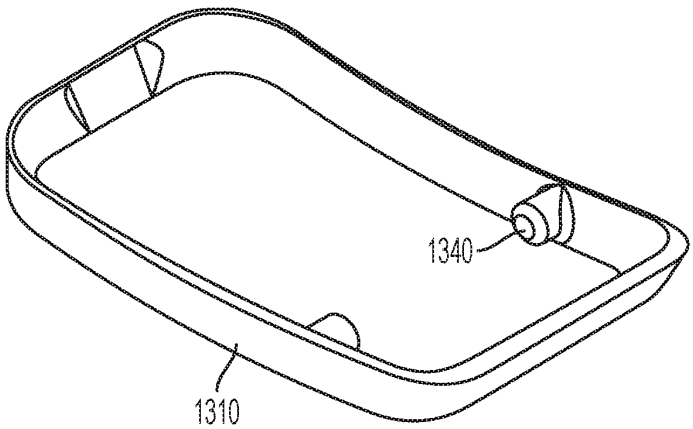

FIG. 13D

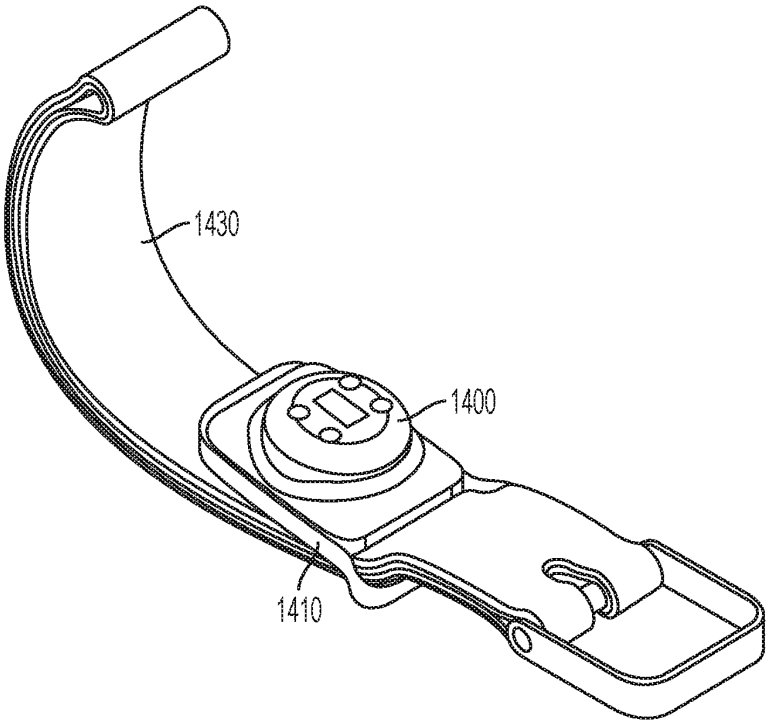

FIG. 14A

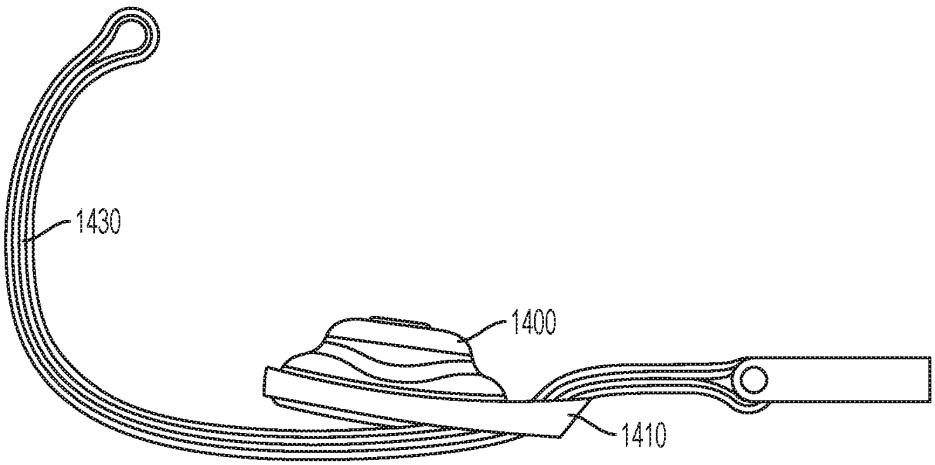

FIG. 14B

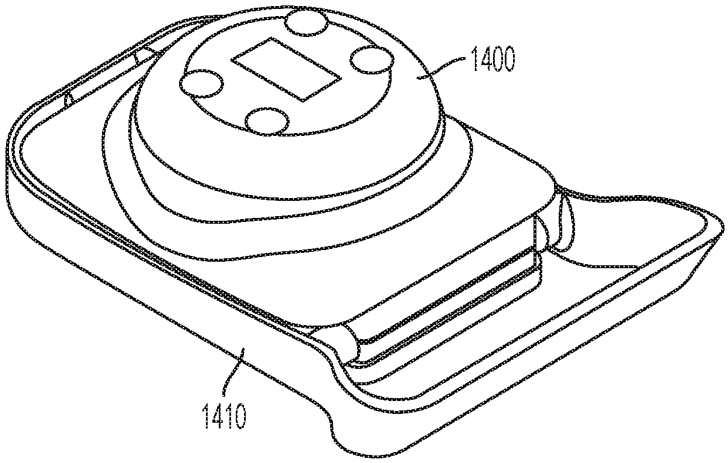

FIG. 14C

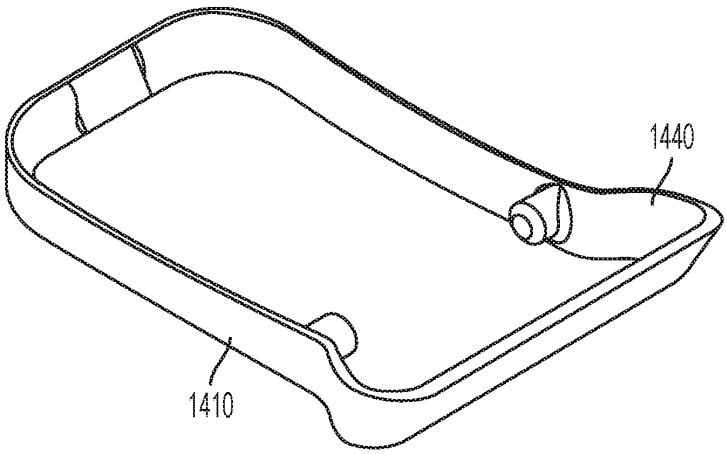

FIG. 14D

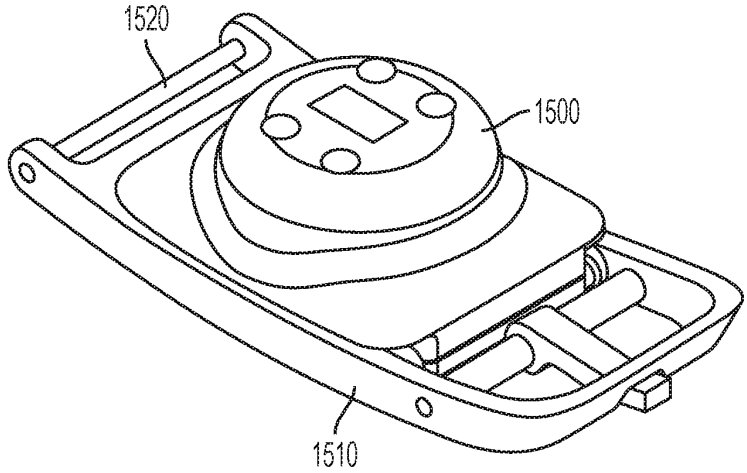

FIG. 15A

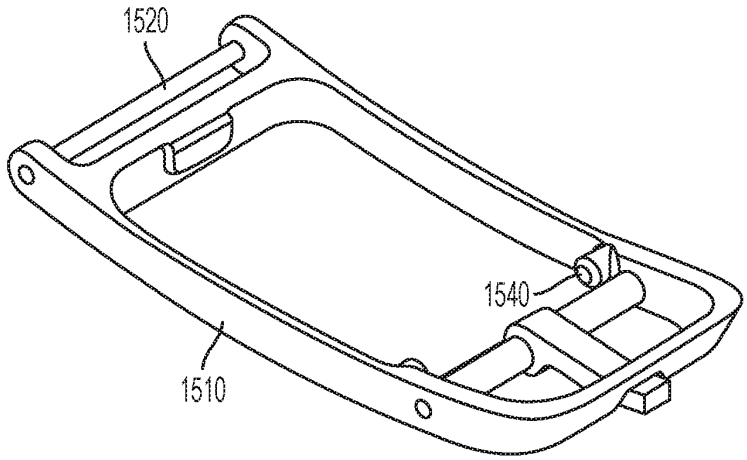

FIG. 15B

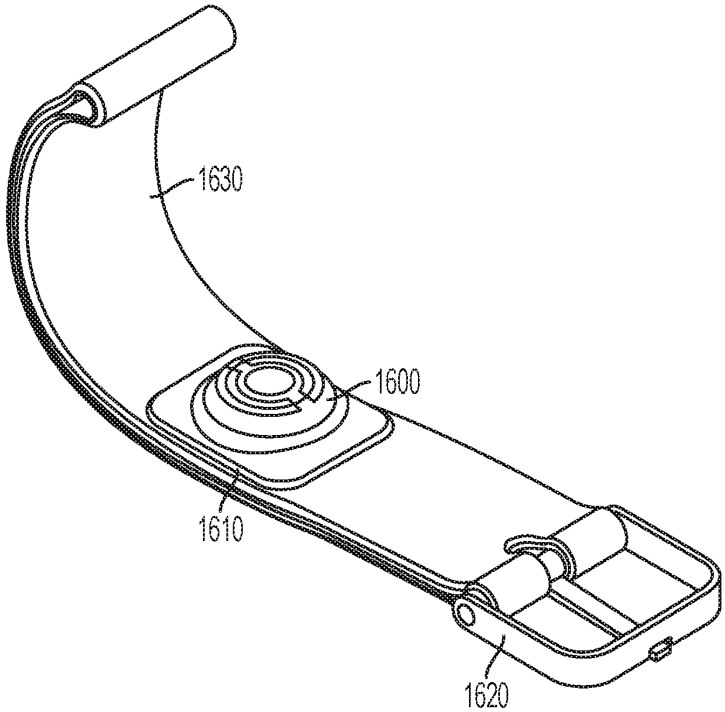

FIG. 16A

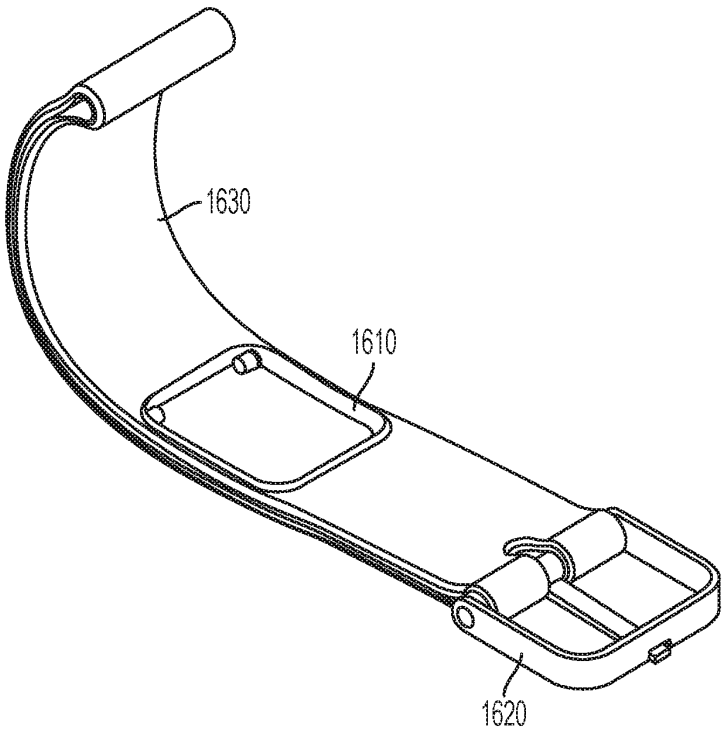

FIG. 16B

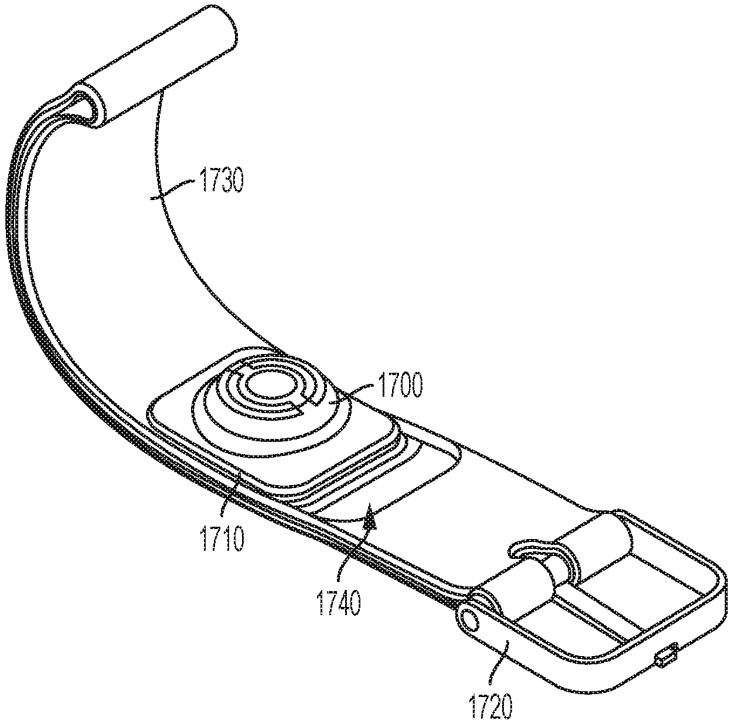

FIG. 17A

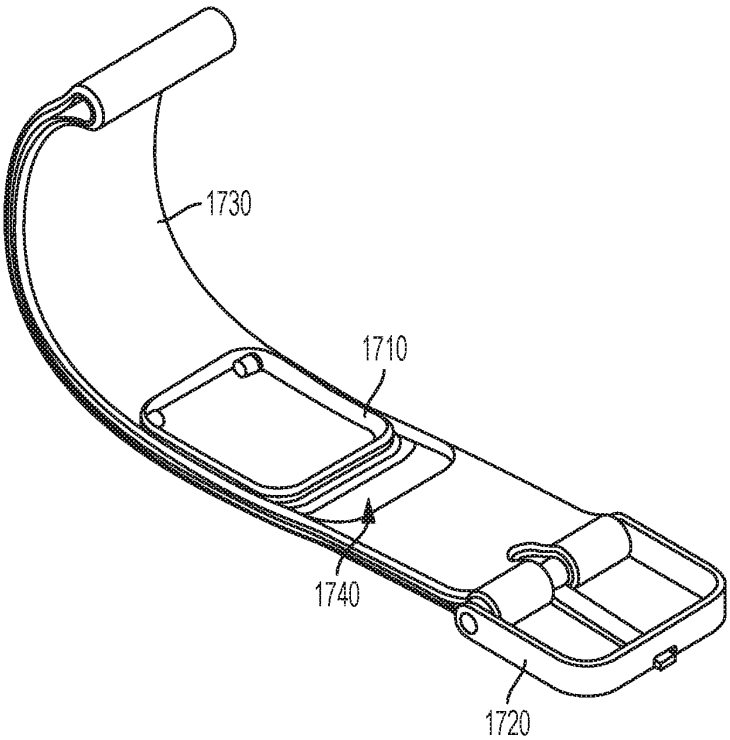

FIG. 17B

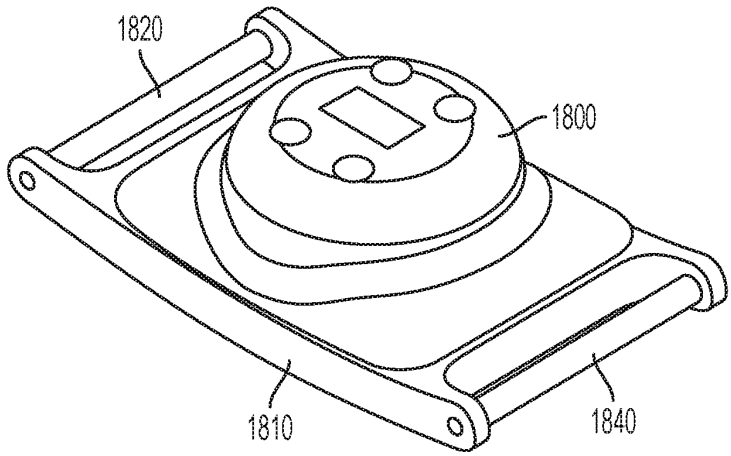

FIG. 18A

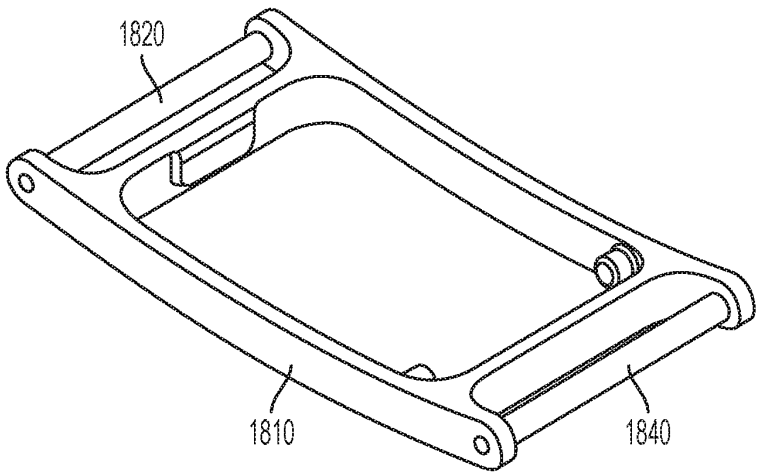

FIG. 18B

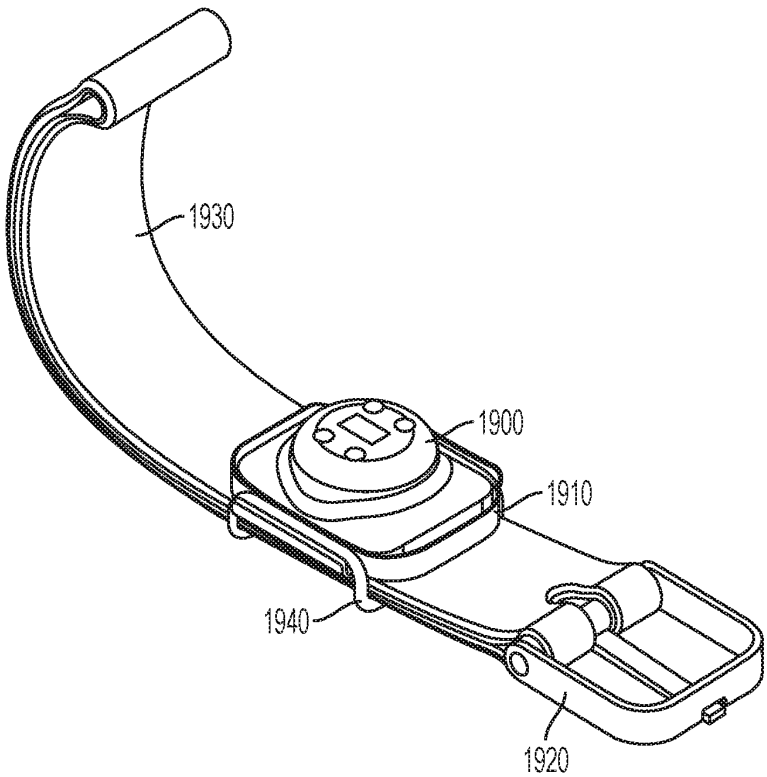

FIG. 19A

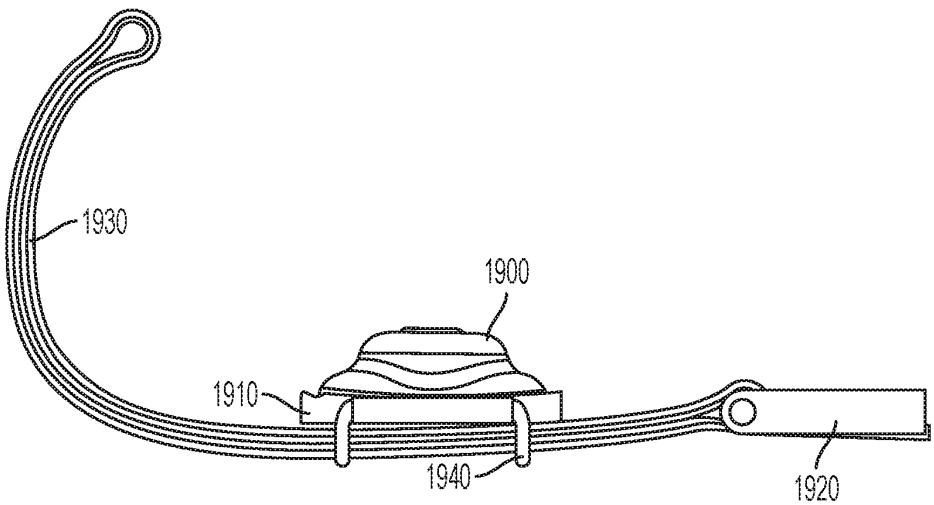

FIG. 19B

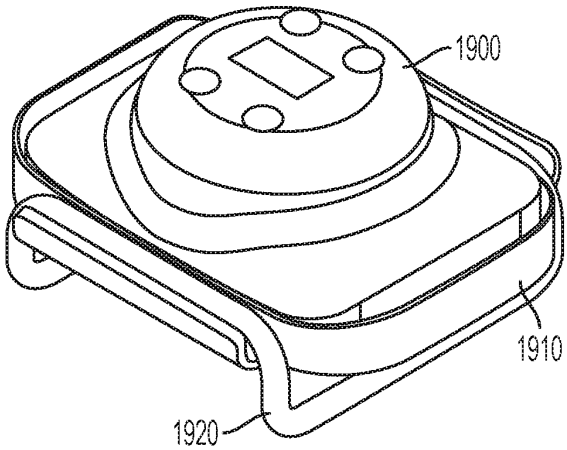

FIG. 19C

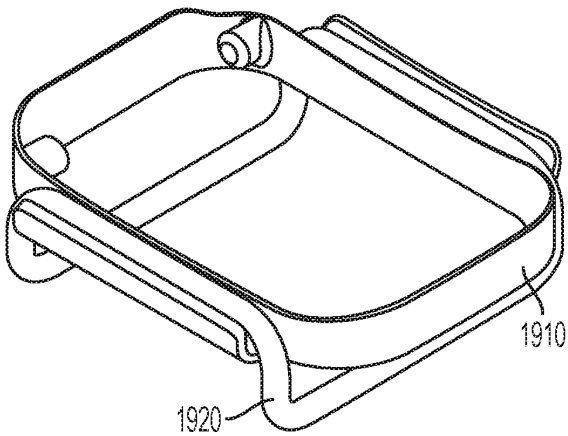

FIG. 19D

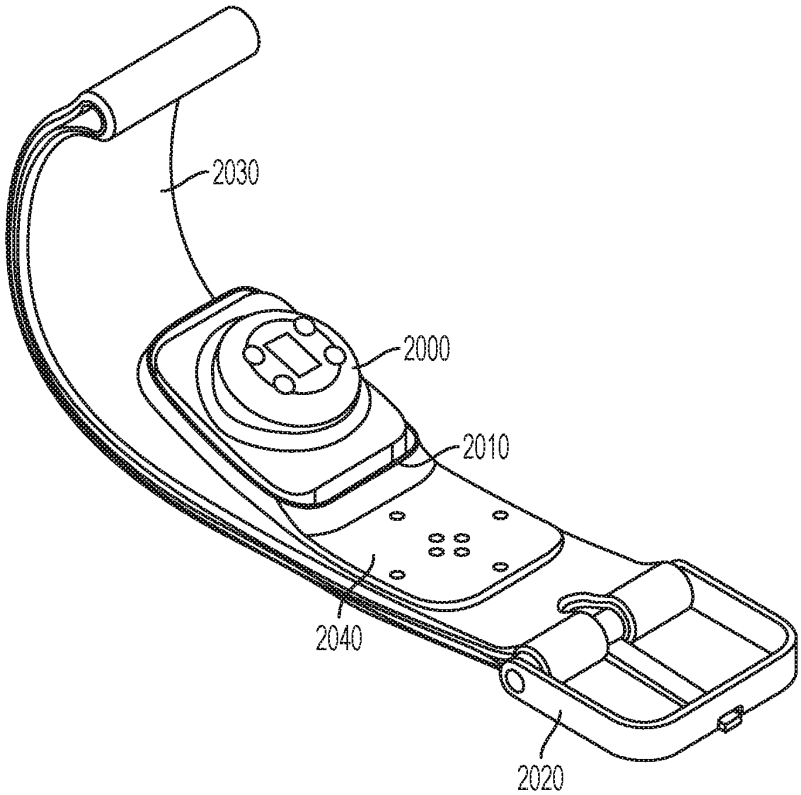

FIG. 20A

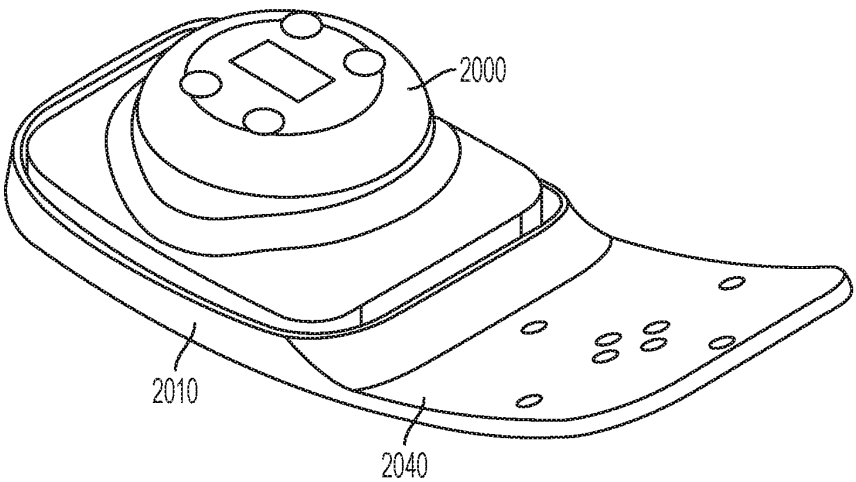

FIG. 20B

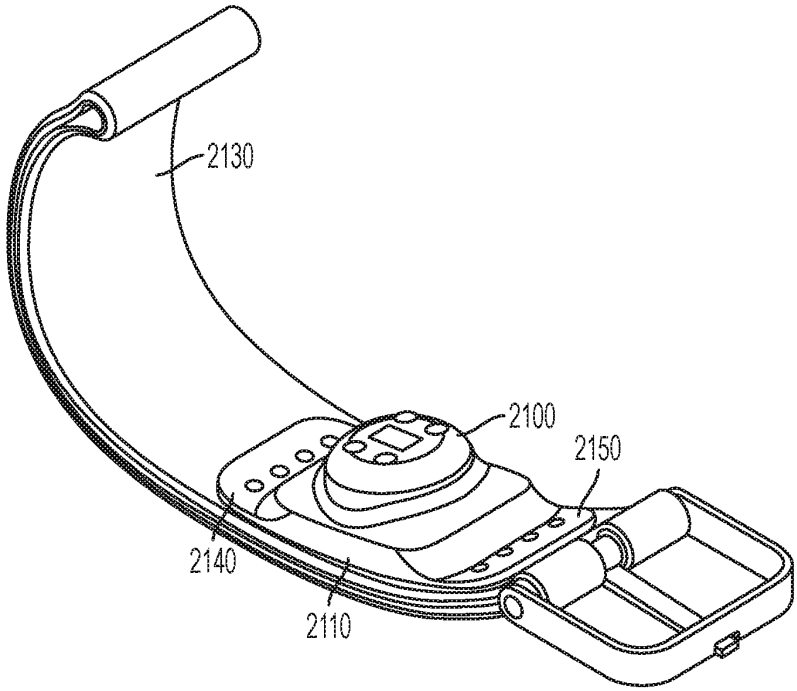

FIG. 21A

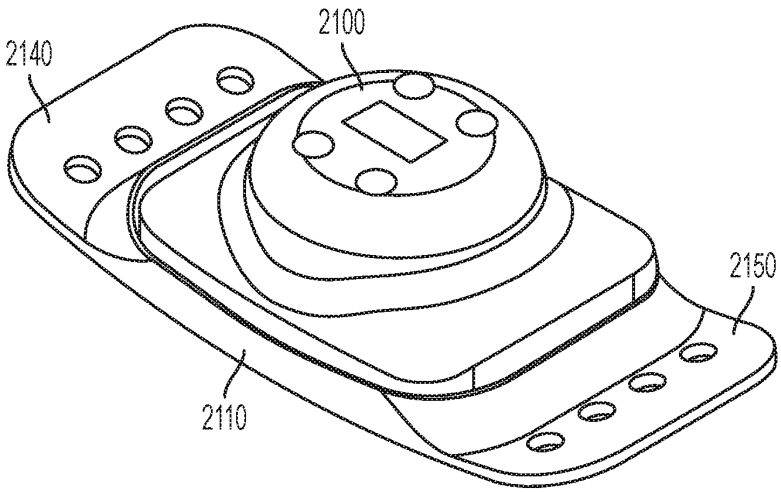

FIG. 21B

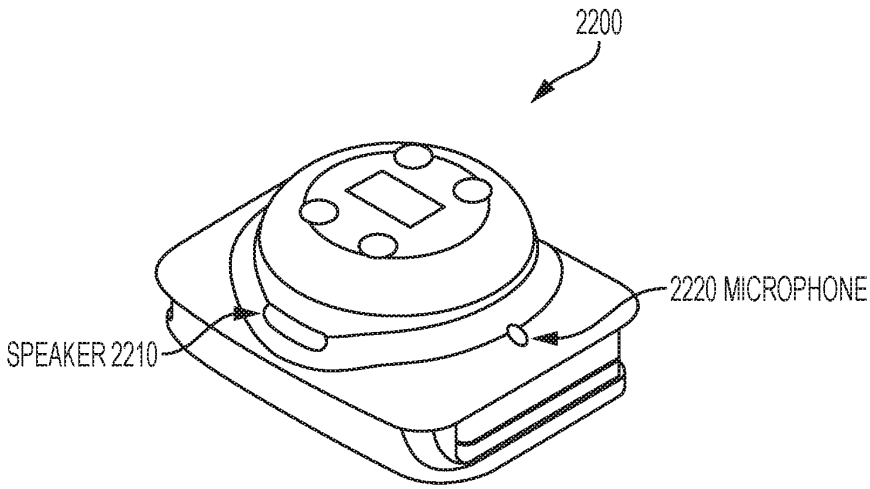

FIG. 22

INTERNATIONAL SEARCH REPORT

International application No.
PCT/US17/23608

A. CLASSIFICATION OF SUBJECT MATTER

IPC - G04B 37/14, 47/06; G04G 17/04, 21/02; A61B 5/04, 5/024, 5/08 (2017.01)

CPC - G04B 37/1486, 47/063; G04G 17/04, 21/025; A61B 5/04004, 5/024, 5/0816, 5/681

According to International Patent Classification (IPC) or to both national classification and IPC

B. FIELDS SEARCHED

Minimum documentation searched (classification system followed by classification symbols)
See Search History document

Documentation searched other than minimum documentation to the extent that such documents are included in the fields searched
See Search History document

Electronic data base consulted during the international search (name of data base and, where practicable, search terms used)
See Search History document

C. DOCUMENTS CONSIDERED TO BE RELEVANT

Category*	Citation of document, with indication, where appropriate, of the relevant passages	Relevant to claim No.
X --- Y	US 2015/0313542 A1 (NEUMITRA INC.) November 5, 2015; figures 1-3, 5A; paragraphs [0035-0047]	1-11, 13-14 & 29-36 --- 12
Y	US 2013/0145586 A1 (OMEGA S.A.) June 13, 2013; abstract; figure 1; paragraph [0020]	12
A	US 2015/0378312 A1 (MODARAGAMAGE, D.) December 31, 2015; entire document	1-14, 29-36

☐ Further documents are listed in the continuation of Box C. ☐ See patent family annex.

* Special categories of cited documents:

"A" document defining the general state of the art which is not considered to be of particular relevance

"E" earlier application or patent but published on or after the international filing date

"L" document which may throw doubts on priority claim(s) or which is cited to establish the publication date of another citation or other special reason (as specified)

"O" document referring to an oral disclosure, use, exhibition or other means

"P" document published prior to the international filing date but later than the priority date claimed

"T" later document published after the international filing date or priority date and not in conflict with the application but cited to understand the principle or theory underlying the invention

"X" document of particular relevance; the claimed invention cannot be considered novel or cannot be considered to involve an inventive step when the document is taken alone

"Y" document of particular relevance; the claimed invention cannot be considered to involve an inventive step when the document is combined with one or more other such documents, such combination being obvious to a person skilled in the art

"&" document member of the same patent family

Date of the actual completion of the international search	Date of mailing of the international search report
10 July 2017 (10.07.2017)	26 JUL 2017
Name and mailing address of the ISA/ Mail Stop PCT, Attn: ISA/US, Commissioner for Patents P.O. Box 1450, Alexandria, Virginia 22313-1450 Facsimile No. 571-273-8300	Authorized officer Shane Thomas PCT Helpdesk: 571-272-4300 PCT OSP: 571-272-7774

Form PCT/ISA/210 (second sheet) (January 2015)

INTERNATIONAL SEARCH REPORT

International application No.
PCT/US17/23608

Box No. II Observations where certain claims were found unsearchable (Continuation of item 2 of first sheet)

This international search report has not been established in respect of certain claims under Article 17(2)(a) for the following reasons:

1. ☐ Claims Nos.:
because they relate to subject matter not required to be searched by this Authority, namely:

2. ☐ Claims Nos.:
because they relate to parts of the international application that do not comply with the prescribed requirements to such an extent that no meaningful international search can be carried out, specifically:

3. ☐ Claims Nos.:
because they are dependent claims and are not drafted in accordance with the second and third sentences of Rule 6.4(a).

Box No. III Observations where unity of invention is lacking (Continuation of item 3 of first sheet)

This International Searching Authority found multiple inventions in this international application, as follows:
See extra sheet.

1. ☐ As all required additional search fees were timely paid by the applicant, this international search report covers all searchable claims.

2. ☐ As all searchable claims could be searched without effort justifying additional fees, this Authority did not invite payment of additional fees.

3. ☐ As only some of the required additional search fees were timely paid by the applicant, this international search report covers only those claims for which fees were paid, specifically claims Nos.:

4. ☒ No required additional search fees were timely paid by the applicant. Consequently, this international search report is restricted to the invention first mentioned in the claims; it is covered by claims Nos.:
1-14, 29-36

Remark on Protest

☐ The additional search fees were accompanied by the applicant's protest and, where applicable, the payment of a protest fee.

☐ The additional search fees were accompanied by the applicant's protest but the applicable protest fee was not paid within the time limit specified in the invitation.

☐ No protest accompanied the payment of additional search fees.

Form PCT/ISA/210 (continuation of first sheet (2)) (January 2015)

Masimo Ex. 1006
IPR Petition - US D947,842

-***-Continued from Box III-***-

This application contains the following inventions or groups of inventions which are not so linked as to form a single general inventive concept under PCT Rule 13.1. In order for all inventions to be examined, the appropriate additional examination fee must be paid.

Group I: Claims 1-14 and 29-36 are directed towards an assembly and biosensor module comprising one or more processing units and a protruding biosensor.
Group II: Claims 15-20 are directed towards detaching and reattaching an assembly to a second wrist band of a second watch.
Group III: Claim 21 is directed towards a clasp component for a wrist watch band.
Group IV: Claims 22-25 are directed towards a wrist band assembly comprising a clasp placed at the underside of a wearer's wrist.
Group V: Claim 26 is directed towards a wrist watch assembly comprising biosensors attached at an angle.
Group VI: Claims 27-28 are directed towards a sliding biosensor assembly.

The inventions listed as Groups I-VI do not relate to a single general inventive concept under PCT Rule 13.1 because, under PCT Rule 13.2, they lack the same or corresponding special technical features for the following reasons:

The special technical features of Group I include at least one or more processing units between the inner and outer surfaces of the housing; and one or more biosensors protruding from the wrist-facing inner surface of the housing and electronically coupled to the one or more processing units, which are not present in Groups II-VI.

The special technical features of Group II include at least detaching the assembly from the first wrist band of the first watch, and reattaching the assembly to a second wrist band of a second watch, which are not present in Groups I and III-VI.

The special technical features of Group III include at least a first end portion comprising a clasp configured to secure the first end portion to a first portion of the band; a second end portion opposite the first end portion and comprising attachment means for attaching the clasp component to a second portion of the band; and a body portion between the first end portion and the second end portion, configured to hold one or more biosensors in the clasp component, which are not present in Groups I-II and IV-VI.

The special technical features of Group IV include at least a clasp configured for placement at the underside of a wearer's wrist; and one or more biosensors positioned and configured to be held by the wrist band assembly in contact with the underside of the wearer's wrist only to the ulnar side of the clasp or only to the radial side of the clasp, which are not present in Groups I-III and V-VI.

The special technical features of Group V include at least one or more biosensors attached to the wrist band at a position located in an angle 0-45 degrees from a diameter of the ring normal to the watch face, which are not present in Groups I-IV and VI.

The special technical features of Group VI include at least sliding the biosensor assembly along a longitudinal direction of the wrist band so that the biosensor assembly is disposed over the wearer's ulnar artery when the wrist band is worn on the wearer's wrist, which are not present in Groups I-V.

The common technical features shared by Groups I-VI are an assembly configured to attach to a wrist band of a watch; support means for attaching the assembly to a wrist band of the watch; a biosensor module attached to the wrist band; and detecting one or more biosignals of the wearer via the biosensor module at a ventral wrist of a wearer.

However, these common features are previously disclosed by US 2015/0366098 A1 to GOOGLE INC. (hereinafter "Google"). Google discloses an assembly configured to attach to a wrist band of a watch and support means for attaching the assembly to a wrist band of the watch (an electronics modules mating with a wrist band; Figs. 5A-5D; paras [0046]-[0052]); a biosensor module attached to the wrist band (wristband comprises a housing that includes at least one detector 150 (biosensor module); Fig. 1; para [0038]); and detecting one or more biosignals of the wearer via the biosensor module at a ventral wrist of a wearer (detector detects physiological parameters related to the health of the person wearing the wearable device, the detector housing sending the parameters at an anterior (ventral) side of the wearer's wrist; Figure 2B; para [0040]).

Since the common technical features are previously disclosed by the Google reference, these common features are not special and so Groups I-VI lack unity.