PUBLIC VERSION

[redacted]

UNITED STATES INTERNATIONAL TRADE COMMISSION
WASHINGTON, D.C.

Before the Honorable Monica Bhattacharyya
Administrative Law Judge

In the Matter of **CERTAIN LIGHT-BASED PHYSIOLOGICAL MEASUREMENT DEVICES AND COMPONENTS THEREOF**	Inv. No. 337-TA-1276

RESPONDENT APPLE INC.'S SECOND CORRECTED POST-HEARING BRIEF

[redacted]

TABLE OF CONTENTS

I. INTRODUCTION 1

A. Procedural History 6
B. The Parties 6

1. Masimo & Cercacor 6
2. Apple 7

C. Overview of the Technology 7
D. The Asserted Patents 7

1. U.S. Patent Nos. 10,912,501, 10,912,502, and 10,945,648 7
2. U.S. Patent No. 10,687,745 8
3. U.S. Patent No. 7,761,127 9

E. The Products at Issue 9

1. Masimo's Domestic Industry Products 9

a. Masimo Watch 9
b. rainbow sensors 12

2. The Accused Products 13

II. JURISDICTION 18

III. LEGAL STANDARD FOR DOMESTIC INDUSTRY REQUIREMENT 18

IV. '501, '502, AND '648 PATENTS 21

A. Level of Ordinary Skill in the Art 26
B. Noninfringement 26

1. No Protrusions, Openings, or Through Holes "Over" or "Above" Interior Surface or Photodiodes When Apple Watch Is Configured to Measure Physiological Parameter ('501 Claim 12; '502 Claims 22 and 28; '648 Claims 24, 30) 26
2. No "Through Holes" or "Openings" "Through" the Protrusion ('501 Claim 12; '502 Claims 22 and 28; '648 Claims 12, 24, and 30) 34
3. No Indirect Infringement ('502 Claim 28) 39

C. No Domestic Industry – "Technical Prong" 41

1. No Patent-Practicing Article Existed As Of The Complaint 42
2. "Masimo Watch" Articles Do Not Practice the Poeze DI Claims 45

a. "Masimo Watch" Articles Do Not Practice '501 Claim 12 45

(1) CPX-0052C and CPX-0058C are not "a user-worn device" [1 preamble], [12] 45

(2) Articles are not "configured to noninvasively measure a physiological parameter" [1 preamble] and lack "one or more processors configured … to calculate a measurement of the physiological parameter of the user" [1F] 46

(3) No evidence articles have "at least three photodiodes arranged on an interior surface…" [1B]; or "opaque lateral surfaces configured to avoid light piping" [1E].....52

b. The "Masimo Watch" Articles Do Not Practice '502 Claim 28.....54

(1) CPX-0052C and CPX-0058C are not "a user worn device" [28 preamble] and lack "a strap configured to position the user-worn device on the user" [28M] 54

(2) Articles Are Not "Configured to Non-Invasively Measure An Oxygen Saturation Of a User" [28 preamble] and Lack "One Or More Processors Configured To … Calculate An Oxygen Saturation Measurement Of The User" [28I].....54

(3) No evidence articles have "a first set of light emitting diodes (LEDs), the first set of LEDs comprising at least an LED configured to emit light at a first wavelength and an LED configured to emit light at a second wavelength" [28A]; "a second set of LEDs spaced apart from the first set of LEDs, the second set of LEDs comprising at least an LED configured to emit light at the first wavelength and an LED configured to emit light at the second wavelength" [28B] "four photodiodes arranged in a quadrant configuration…" [28C]; a "thermistor…" [28D]; "a storage device configured to at least temporarily store at least the measurement" [28L] 54

c. "Masimo Watch" Articles Do Not Practice '648 Claims 12, 20, or 30 55

(1) CPX-0052C and CPX-0058C are not "user-worn device[s]" [8 preamble] & [20 preamble] and lack "a strap configured to position the housing proximate tissue of the user when the device is worn" [8I].....55

(2) Articles are not "configured to non-invasively determine measurements of a physiological parameter of a user" [8 preamble] & [20 preamble] and do not have "processors configured to" "output measurements of a physiological parameter" [8G] or "determine measurements of oxygen saturation" [20E].....56

(3) No evidence articles have "a first set of light emitting diodes (LEDs)…" [8A]; "second set of LEDs spaced apart from the first set of LEDs…" [8B]; "four photodiodes" [8C]; or "at least four photodiodes…being arranged to

capture light at different quadrants of tissue of a user" [20B] 56

D. Invalidity 56

1. Anticipation / Obviousness 57

a. State of the Art 57

(1) Known Components for Light-Based Sensors Before 2008 57

(2) Kansas State Devices Built Before 2008 64

b. Anticipation Under 35 U.S.C. § 102(a) / Single-Reference Obviousness Under 35 U.S.C. § 103(a) Based on Lumidigm 67

(1) Lumidigm 67

(2) '501 Patent, Claim 12 70

(3) '502 Patent, Claim 22 79

(4) '502 Patent, Claim 28 88

(5) '648 Patent, Claim 12 98

(6) '648 Patent, Claims 24 and 30 100

c. Obviousness Under 35 U.S.C. § 103(a) 103

(1) Lumidigm in View of Seiko 131 and Cramer Render Obvious All Asserted Claims 103

(2) Lumidigm in View of Webster Render Obvious '502 Claim 22 120

(3) Lumidigm in view of Seiko 131, Cramer, and Webster Render Obvious Claim 22 124

(4) Lumidigm in View of Webster and Apple '047 Render Obvious '502 claim 28 128

(5) Lumidigm in View of Seiko 131, Cramer, Webster, and Apple '047 Render Obvious '502 Claim 28 134

d. No Secondary Considerations of Non-Obviousness 140

2. Invalidity Under 35 U.S.C. § 112 147

E. Unenforceability 153

1. Prosecution Laches 153

2. Unclean Hands 158

V. U.S. PATENT NO. 10,687,745 159

A. Level of Skill of a Person of Ordinary Skill in the Art 163

B. Claim Construction ("Second Shape" Claims 1, 20) 163

C. Noninfringement 164

1. The [redacted] Does Not Receive Light Having the "First Shape" That Was Emitted By the "Light-Emitting" Diodes" [1B], [20B] 165

a. Complainants' expert's test images confirm that [redacted] 167

b. Complainants and their expert have failed to show that [redacted] 168

2. [redacted] Is Not Configured To Change the Shape of the Light It Receives Into a "Second Shape" [1B], [20B] 170

a. [redacted] and does not change light shape 171

b. Dr. Madisetti's testing images confirm that [redacted] does not change the shape of light emitted by an LED 171

3. Complainants and Dr. Madisetti Have Not Proven Indirect Infringement or Infringement Under the Doctrine of Equivalents 173

D. No Domestic Industry – "Technical Prong" 173

1. No Patent-Practicing Article Existed as of the Complaint.....174

2. The Alleged '745 DI Articles Do Not Practice Claim 18 175

a. The Alleged '745 DI Articles Lack "A Light Diffusing Material Configured To Be Positioned Between The Plurality Of Light-Emitting Diodes…" [15B] 175

b. The Alleged '745 DI Articles Lack "A Processor Configured To Receive And Process The Outputted At Least One Signal And Determine A Physiological Parameter Of The User Responsive To The Outputted At Least One Signal" [15H].....176

E. Invalidity 178

1. Obviousness Under 35 U.S.C. § 103 178

a. State of the Art 178

b. Series 0 Renders Claim 9 and Claim 27 Obvious.....178

(1) Claim 9 179

(2) Claim 27 184

c. Iwamiya In View of Sarantos Render Claim 9 Obvious.....186

d. Iwamiya In View of Sarantos and Venkatraman Render Claims 18 and 27 Obvious 193

e. No Secondary Considerations of Non-Obviousness.....199

2. Invalidity Under 35 U.S.C. § 112 201

a. Claims 1 and 20 Lack Written Description.....201

b. Claim 15 is Indefinite.....202

F. Unenforceability (Prosecution Laches).....204

VI. U.S. PATENT NO. 7,761,127 205

A. Level of Ordinary Skill in the Art 209

B. Agreed-Upon Claim Construction: "Plurality of Operating Wavelengths" (Claim 7) 209

Claim Term 209
Agreed-Upon Construction 209
"plurality of operating wavelengths" 209
"two or more operating wavelengths" 209

C. Noninfringement 209

1. State of the Art 209
2. Claim 9 of the '127 Patent 212
3. The Accused Apple Watches Do Not Have The Claimed "Thermal Mass" [7A], [7B], [7D], [7F] 215

a. Complainants failed to show the Accused Apple Watches have a "thermal mass" 218

4. The Accused Apple Watches Do Not Determine A "Bulk Temperature" [7F] 219

a. Complainants failed to show the Accused Apple Watches measure a "bulk temperature for the thermal mass" 222

D. No Domestic Industry – "Technical Prong" 224

1. Complainants' "Current Rainbow Sensors" Do Not Practice Claim 9 226

a. No "Thermal Mass" (Limitation 7[A]) 226
b. No "Bulk Temperature" (Limitation 7[E]) 229

2. Complainants' "Early Rainbow Sensors" Do Not Practice Claim 9 230

a. No "Thermal Mass" (Limitation 7[A]) 230
b. No "Bulk Temperature" (Limitation 7[E]) 232

3. No Doctrine of Equivalents Infringement or Indirect Infringement 232

E. Invalidity 232

1. Invalidity Based on Obviousness Under 35 U.S.C. § 103(a) 233

a. Mendelson in View of Webster Render Claim 9 Obvious 233
b. Yamada in View of Noguchi Render Claim 9 Obvious 239

2. No Secondary Considerations of Non-Obviousness 244

VII. DOMESTIC INDUSTRY – ECONOMIC PRONG 245

A. Lack of Significant Investment in Plant and Equipment 245

1. Masimo Watch 245

a. Complainants' Source Appendices Are Unreliable. 245

b. Complainants Improperly Rely on Post-Complaint Evidence....248

c. Complainants' Claimed Expenditures Are Overstated....249

(1) [redacted] Product Development....249

(2) Manufacturing....250

(3) Clinical Lab, Quality, and R&D....252

d. Complainants Have Failed to Demonstrate "Significance" in an Appropriate Context....253

e. Complainants Improperly Aggregated Domestic Industry Expenditures....256

f. Complainants' Claim of a Domestic Industry "in the Process of Being Established" Is Not Supported by the Evidentiary Record....258

2. Rainbow Sensors....260

a. Claimed Expenditures Are Not Tied to Article(s) Identified Under the Technical Prong....261

b. Complainants' Claimed Expenditures Are Based On Unreliable Evidence and Allocations....262

c. Complainants' Claimed Expenditures Are Overstated....263

(1) R&D Facilities – 52 Discovery and 50 Parker....263

(2) [redacted]....263

(3) [redacted]....264

d. Complainants Have Failed to Demonstrate "Significance" in an Appropriate Context....264

B. Lack of Significant Employment of Labor or Capital....265

1. Masimo Watch....265

a. Complainants' Source Appendices Are Unreliable....265

b. Complainants Improperly Rely on Post-Complaint Evidence....266

c. Complainants Improperly Rely on Non-Qualifying Expenditures....266

d. Complainants' Claimed Expenditures Are Overstated....267

(1) R&D Labor: [redacted]....267

(2) Manufacturing, Clinical Lab, Quality Labor....268

(3) Executive Labor....269

(4) Customer Support Labor....270

(5) [redacted]....270

(6) R&D labor: "Watch"....271

(7) [redacted]....271

(8) HR Recruiting Labor....272

e. Complainants Have Failed to Demonstrate "Significance" in an Appropriate Context....272

f. Complainants Improperly Aggregated Domestic Industry Expenditures. 274

g. Complainants' Claim of a Domestic Industry "in the Process of Being Established" Is Not Supported by the Evidentiary Record. 275

2. Rainbow Sensors....275

a. Complainants' Claimed Expenditures Are Based On Unreliable Evidence And Allocations. 275

b. Complainants' Claimed Expenditures Are Overstated. 275

(1) Masimo R&D Labor 275

(2) Cercacor R&D Labor 276

(3) Manufacturing Labor 277

(4) 277

c. Complainants Improperly Rely on 277

d. Complainants Have Failed To Demonstrate "Significance" in an Appropriate Context. 278

VIII. REMEDY AND BONDING....279

A. Any Remedy Should Be Narrowly Tailored To Permit Service, Repair, and Replacement For Existing Customers and Contain a Certification Provision. 279

B. No Bond Should Be Imposed During The Presidential Review Period. 280

[redacted]

TABLE OF AUTHORITIES

Page(s)

CASES

01 Communique Lab'y, Inc. v. Citrix Sys., Inc.,
889 F.3d 735 (Fed. Cir. 2018).....208, 211

Certain Electrical Connectors and Cages, Components Thereof, and Products Containing Same, Inv. No. 337-TA-1241, Initial Determination (Mar. 11, 2022).....247

Bicon, Inc. v. Straumann Co.,
441 F.3d 945 (Fed. Cir. 2006).....164, 213

Cable Elec. Prods, Inc. v. Genmark, Inc.,
770 F. 2d 1015 (Fed. Cir. 1987).....143

Cancer Research. Tech. Ltd. v. Barr Labs., Inc.,
625 F.3d 724 (Fed. Cir. 2010).....153

Certain Bone Cements, Inv. No. 337-TA-1153, Comm'n Op. (Jan. 25, 2021).....269

Certain Carburetors and Products Containing Such Carburetors, Inv. No. 337-TA-1123, Comm'n Op. (Oct. 28, 2019).....253

Certain Coaxial Cable Connectors, Inv. No. 337-TA-650,
Comm'n Op. (Apr. 14, 2010).....18

Certain Composite Aerogel Insulation Materials, Inv. No. 337-TA-1003,
Comm'n Op. (Feb. 22, 2018).....279

Certain Digital Cameras, Inv. No. 337-TA-1059, Order No. 52 (Feb. 20, 2018).....19, 20

Certain Digital Media Devices, Inv. No. 337-TA-882,
Initial Determination (July 7, 2014).....251

Certain Electronic Devices, Inv. No. 337-TA-701, Order No. 58 (Nov. 18, 2010).....20

Certain Electronic Devices, Inv. No. 337-TA-794, Comm'n Op. (July 5, 2013).....279, 280

Certain Electronic Stud Finders, Inv. No. 337-TA-1221,
Comm'n Op. (Mar. 14, 2022).....257

Certain Infotainment Sys., Components Thereof, & Automobiles Containing the Same, Inv. No. 337-TA-1119, 2019 WL 4744857 (Sept. 23, 2019).....68

Certain LED Lighting Devices, Inv. No. 337-TA-1081, Order No. 55 (Aug. 1, 2018) 261

Certain Mobile Devices, Inv. No. 337-TA-744, Comm'n Op. (June 5, 2012) 279

Certain Mobile Devices with Multifunction Emulators, Inv. No. 337-TA-1170, Order No. 19 (June 9, 2020) 20

Certain Movable Barrier Operator Sys. & Components Thereof, Inv. No. 337-TA-1118, 2019 WL 1773475 (Apr. 16, 2019) 68

Certain Road Construction Machines, Inv. No. 337-TA-1088, Order No. 30 (July 26, 2018) 258

Certain Set-Top Boxes, Inv. No. 337-TA-454, Final Initial Determination, 2002 WL 31556392 (June 21, 2002) 174

Certain Solid State Storage Drives, Stacked Elecs. Components & Prods. Containing Same, Inv. No. 337-TA-1097, Comm'n Op. (Jun. 29, 2018) 248

Certain Stringed Musical Instruments, Inv. No. 337-TA-586, Comm'n Op. (May 16, 2008) 266

Certain Television Sets, Inv. No. 337-TA-910, Comm'n Op. (Oct. 30, 2015) 278

Certain Thermoplastic-Encapsulated Electric Motors, Inv. No. 337-TA-1073, Comm'n Op. (Aug. 12, 2019) 19

Commil USA, LLC v. Cisco Sys., Inc., 575 U.S. 632 (2015) 40

Consol. Aluminum Corp. v. Foseco Int'l Ltd., 910 F.2d 804 (Fed. Cir. 1990) 160

Flash-Control, LLC v. Intel Corp., No. 2020-2141, 2021 WL 2944592 (Fed. Cir. July 14, 2021) 149, 152, 203

Gilead Scis., Inc. v. Merck & Co., Inc., 888 F.3d 1231 (Fed. Cir. 2018) 159

Howmedica Osteonics Corp. v. Tranquil Prospects, Ltd., 401 F.3d 1367 (Fed. Cir. 2005) 205

Hyatt v. Hirshfeld, 998 F.3d 1347 (Fed. Cir. 2021) 156

Hynix Semiconductor Inc. v. Rambus Inc., Nos. CV-00-20905-RMW, C-05-02298 RMW, C-05-00334 RMW, C-06-00244 RMW, 2007 WL 4209386 (N.D. Cal. Nov. 26, 2007).....159

Hyundai Elec. Indus. Co. v. USITC, 899 F.2d 1204 (Fed. Cir. 1990).....279

In re Bogese, 303 F.3d 1362 (Fed. Cir. 2002).....159

In re Mihalich, 980 F.2d 744 (Fed. Cir. 1992).....220

Keystone Driller Co. v. General Excavator Co., 290 U.S. 240 (1933).....159

Lelo Inc, v. ITC, 786 F.3d 879 (Fed. Cir. 2015).....267, 270, 278

Microsoft Corp. v. ITC, 731 F.3d 1354 (Fed. Cir. 2013).....20, 261

Nalco Co. v. Chem-Mod, LLC, 883 F.3d 1337 (Fed. Cir. 2018).....40

Nautilus, Inc. v. Biosig Instruments, Inc., 572 U.S. 898 (2014).....204

Nazomi Commc'ns, Inc. v. Nokia Corp., 739 F.3d 1339 (Fed. Cir. 2014).....33

Niazi Licensing Corp. v. St. Jude Med. S.C., Inc., 30 F.4th 1339 (Fed. Cir. 2022).....39

Novozymes A/S v. DuPont Nutrition Biosciences APS, 723 F.3d 1336 (Fed. Cir. 2013).....149, 203

Ormco Corp. v. Align Tech., Inc., 463 F.3d 1299 (Fed. Cir. 2006).....145

Personalized Media Commc'ns, LLC v. Apple, Inc., 552 F. Supp.3d 664 (E.D. Tex. 2021).....156

Power Integrations, Inc. v. Fairchild Semiconductor Int'l, Inc., 711 F.3d 1348 (Fed. Cir. 2013).....148

Process Control Corp. v. HydReclaim Corp.,
190 F.3d 1350 (Fed. Cir. 1999).....165

Seaboard Int'l, Inc. v. Cameron Int'l Corp., No. 1:13–CV–00281–MLH–SKO,
2013 WL 3936889 (E.D. Cal. July 30, 2013).....158

Symbol Techs., Inc. v. Lemelson Med., Educ. & Research Found., LP,
422 F.3d 1378 (Fed. Cir. 2005).....156, 158, 206

Tokai Corp. v. Easton Enterprises, Inc.,
632 F.3d 1358 (Fed. Cir. 2011).....145

TQ Delta, LLC v. CISCO Sys., Inc.,
942 F.3d 1352 (Fed. Cir. 2019).....228, 231, 232

Wm. Wrigley Jr. Co. v. Cadbury Adams USA LLC,
683 F.3d 1356 (Fed. Cir. 2012).....143

Woodland Trust v. Flowertree Nursery, Inc.,
148 F.3d 1368 (Fed. Cir. 1998).....248

Yoon Ja Kim v. ConAgra Foods, Inc.,
465 F.3d 1312 (Fed. Cir. 2006).....219, 227, 232

STATUTES AND REGULATIONS

19 U.S.C. § 1337(a).....18, 20, 225, 261

35 U.S.C. § 102..... passim

35 U.S.C. § 103..... passim

35 U.S.C. § 112..... passim

S. Rep. No. 1298, 93rd Cong., 2d Sess. 198 (1974).....280

[redacted]

TABLE OF ABBREVIATIONS	
'501 patent	U.S. Patent No. 10,912,501
'502 patent	U.S. Patent No. 10,912,502
'648 patent	U.S. Patent No. 10,945,648
'745 patent	U.S. Patent No. 10,687,745
'127 patent	U.S. Patent No. 7,761,127
"Poeze Patents"	U.S. Patent No. 10,912,501, U.S. Patent No. 10,912,502, and U.S. Patent No. 10,945,648
Tr.	Hearing Transcript
Dep.	Deposition Transcript
JX	Joint Exhibit
CX	Complainants' Exhibit
CPX	Complainants' Physical Exhibit
CDX	Complainants' Demonstrative Exhibit
RX	Respondent's Exhibit
RPX	Respondent's Physical Exhibit
RDX	Respondent's Demonstrative Exhibit
CPHB	Complainants' Pre-Hearing Brief
CIB	Complainants' Initial Post-Hearing Brief
CRB	Complainants' Reply Post-Hearing Brief
RPHB	Respondent's Pre-Hearing Brief
RIB	Respondent's Initial Post-Hearing Brief
RRB	Respondent's Reply Post-Hearing Brief

[redacted]

TABLES OF CLAIM ELEMENT IDENTIFIERS

U.S. Patent No. 10,912,501	
Identifier	**Claim/Element**
Claim 12	
[1 Preamble]	A user-worn device configured to noninvasively measure a physiological parameter of a user, the user-worn device comprising:
[1A]	at least three light emitting diodes (LEDs);
[1B]	at least three photodiodes arranged on an interior surface of the user-worn device and configured to receive light attenuated by tissue of the user;
[1C]	a protrusion arranged over the interior surface, the protrusion comprising a convex surface and
[1D]	a plurality of openings extending through the protrusion and positioned over the three photodiodes,
[1E]	the openings each comprising an opaque lateral surface, the plurality of openings configured to allow light to reach the photodiodes, the opaque lateral surface configured to avoid light piping through the protrusion; and
[1F]	one or more processors configured to receive one or more signals from the photodiodes and calculate a measurement of the physiological parameter of the user.
[12]	The user-worn device of Claim 1, wherein the convex surface of the protrusion is an outermost surface configured to contact the tissue of the user and conform the tissue into a concave shape.

[redacted]

U.S. Patent No. 10,912,502	
Identifier	**Claim/Element**
Claim 22	
[19 Preamble]	A user-worn device configured to non-invasively measure an oxygen saturation of a user, the user worn device comprising:
[19A]	a plurality of emitters configured to emit light, each of the emitters comprising at least two light emitting diodes (LEDs);
[19B]	four photodiodes arranged within the user-worn device and configured to receive light after at least a portion of the light has been attenuated by tissue of the user;
[19C]	a protrusion comprising a convex surface including separate openings extending through the protrusion and lined with opaque material, each opening positioned over a different one of the four photodiodes, the opaque material configured to reduce an amount of light reaching the photodiodes without being attenuated by the tissue;
[19D]	optically transparent material within each of the openings; and
[19E]	one or more processors configured to receive one or more signals from at least one of the four photodiodes and output measurements responsive to the one or more signals, the measurements indicative of the oxygen saturation of the user.
[20]	The user-worn device of claim 19 further comprising a thermistor.
[21]	The user-worn device of claim 20, wherein the one or more processors are further configured to receive a temperature signal from the thermistor and adjust operation of the user-worn device responsive to the temperature signal.
[22]	The user-worn device of claim 21, wherein the plurality of emitters comprise at least four emitters, and wherein each of the plurality of emitters comprises a respective set of at least three LEDs.

[redacted]

U.S. Patent No. 10,912,502	
Identifier	**Claim/Element**
Claim 28	
[28 Preamble]	A user-worn device configured to non-invasively measure an oxygen saturation of a user, the user worn device comprising:
[28A]	a first set of light emitting diodes (LEDs), the first set of LEDs comprising at least an LED configured to emit light at a first wavelength and an LED configured to emit light at a second wavelength;
[28B]	a second set of LEDs spaced apart from the first set of LEDs, the second set of LEDs comprising at least an LED configured to emit light at the first wavelength and an LED configured to emit light at the second wavelength;
[28C]	four photodiodes arranged in a quadrant configuration on an interior surface of the user-worn device and configured to receive light after at least a portion of the light has been attenuated by tissue of the user;
[28D]	a thermistor configured to provide a temperature signal;
[28E]	a protrusion arranged above the interior surface, the protrusion comprising: a convex surface;
[28F]	a plurality of openings in the convex surface, extending through the protrusion, and aligned with the four photodiodes, each opening defined by an opaque surface configured to reduce light piping; and
[28G]	a plurality of transmissive windows, each of the transmissive windows extending across a different one of the openings;
[28H]	at least one opaque wall extending between the interior surface and the protrusion, wherein at least the interior surface, the opaque wall and the protrusion form cavities, wherein the photodiodes are arranged on the interior surface within the cavities;
[28I]	one or more processors configured to receive one or more signals from at least one of the photodiodes and calculate an oxygen saturation measurement of the user, the one or more processors further configured to receive the temperature signal;
[28J]	a network interface configured to wirelessly communicate the oxygen saturation measurement to at least one of a mobile phone or an electronic network;
[28K]	a user interface comprising a touch-screen display, wherein the user interface is configured to display indicia responsive to the oxygen saturation measurement of the user;
[28L]	a storage device configured to at least temporarily store at least the measurement; and
[28M]	a strap configured to position the user-worn device on the user.

[redacted]

U.S. Patent No. 10,945,648	
Identifier	**Claim/Element**
Claim 12	
[8 Preamble]	A user-worn device configured to non-invasively determine measurements of a physiological parameter of a user, the user-worn device comprising:
[8A]	a first set of light emitting diodes (LEDs), the first set comprising at least an LED configured to emit light at a first wavelength and at least an LED configured to emit light at a second wavelength;
[8B]	a second set of LEDs spaced apart from the first set of LEDs, the second set of LEDs comprising an LED configured to emit light at the first wavelength and an LED configured to emit light at the second wavelength;
[8C]	four photodiodes;
[8D]	a protrusion comprising a convex surface, at least a portion of the protrusion comprising an opaque material;
[8E]	a plurality of openings provided through the protrusion and the convex surface, the openings aligned with the photodiodes;
[8F]	a separate optically transparent window extending across each of the openings;
[8G]	one or more processors configured to receive one or more signals from at least one of the photodiodes and output measurements of a physiological parameter of a user;
[8H]	a housing; and
[8I]	a strap configured to position the housing proximate tissue of the user when the device is worn.
[12]	The user-worn device of Claim 8, wherein the physiological parameter comprises oxygen or oxygen saturation.
Claim 24	
[20 Preamble]	A user-worn device configured to non-invasively determine measurements of a user's tissue, the user-worn device comprising:
[20A]	a plurality of light emitting diodes (LEDs);
[20B]	at least four photodiodes configured to receive light emitted by the LEDs, the four photodiodes being arranged to capture light at different quadrants of tissue of a user;
[20C]	a protrusion comprising a convex surface and
[20D]	a plurality of through holes, each through hole including a window and arranged over a different one of the at least four photodiodes; and
[20E]	one or more processors configured to receive one or more signals from at least one of the photodiodes and determine measurements of oxygen saturation of the user.
[24]	The user-worn device of Claim 20, wherein the protrusion comprises opaque material configured to substantially prevent light piping.

[redacted]

U.S. Patent No. 10,945,648	
Identifier	**Claim/Element**
Claim 30	
[20 Preamble]	A user-worn device configured to non-invasively determine measurements of a user's tissue, the user-worn device comprising:
[20A]	a plurality of light emitting diodes (LEDs);
[20B]	at least four photodiodes configured to receive light emitted by the LEDs, the four photodiodes being arranged to capture light at different quadrants of tissue of a user;
[20C]	a protrusion comprising a convex surface and
[20D]	a plurality of through holes, each through hole including a window and arranged over a different one of the at least four photodiodes; and
[20E]	one or more processors configured to receive one or more signals from at least one of the photodiodes and determine measurements of oxygen saturation of the user.
[30]	The user-worn device of Claim 20, wherein the protrusion further comprises one or more chamfered edges.

[redacted]

U.S. Patent No. 10,687,745	
Identifier	**Claim/Element**
Claim 9	
[1 Preamble]	A physiological monitoring device comprising:
[1A]	a plurality of light-emitting diodes configured to emit light in a first shape;
[1B]	a material configured to be positioned between the plurality of light-emitting diodes and tissue on a wrist of a user when the physiological monitoring device is in use, the material configured to change the first shape into a second shape by which the light emitted from one or more of the plurality of light-emitting diodes is projected towards the tissue;
[1C]	a plurality of photodiodes configured to detect at least a portion of the light after the at least the portion of the light passes through the tissue, the plurality of photodiodes further configured to output at least one signal responsive to the detected light;
[1D]	a surface comprising a dark-colored coating, the surface configured to be positioned between the plurality of photodiodes and the tissue when the physiological monitoring device is in use, wherein an opening defined in the dark-colored coating is configured to allow at least a portion of light reflected from the tissue to pass through the surface;
[1E]	a light block configured to prevent at least a portion of the light emitted from the plurality of light-emitting diodes from reaching the plurality of photodiodes without first reaching the tissue;
[1F]	and a processor configured to receive and process the outputted at least one signal and determine a physiological parameter of the user responsive to the outputted at least one signal.
[9]	The physiological monitoring device of claim 1, wherein the physiological parameter comprises oxygen saturation.

[redacted]

U.S. Patent No. 10,687,745	
Identifier	**Claim/Element**
Claim 18	
[15 Preamble]	A physiological monitoring device comprising:
[15A]	a plurality of light-emitting diodes configured to emit light proximate a wrist of a user;
[15B]	a light diffusing material configured to be positioned between the plurality of light-emitting diodes and a tissue measurement site on the wrist of the user when the physiological monitoring device is in use;
[15C]	a light block having a circular shape;
[15D]	a plurality of photodiodes configured to detect at least a portion of the light emitted from the plurality of light-emitting diodes after the light passes through the light diffusing material and a portion of the tissue measurement site encircled by the light block, wherein the plurality of photodiodes are arranged in an array having a spatial configuration corresponding to a shape of the portion of the tissue measurement site encircled by the light block,
[15E]	wherein the plurality of photodiodes are further configured to output at least one signal responsive to the detected light, and
[15F]	wherein the plurality of light-emitting diodes and the plurality of photodiodes are arranged in a reflectance measurement configuration;
[15G]	wherein the light block is configured to optically isolate the plurality of light-emitting diodes from the plurality of photodiodes by preventing at least a portion of light emitted from the plurality of light-emitting diodes from reaching the plurality of photodiodes without first reaching the portion of the tissue measurement site;
[15H]	a processor configured to receive and process the outputted at least one signal and determine a physiological parameter of the user responsive to the outputted at least one signal; and
[15I]	wherein the physiological monitoring device is configured to transmit physiological parameter data to a separate processor.
[18]	The physiological monitoring device of claim 15, wherein the physiological parameter comprises oxygen saturation.

[redacted]

U.S. Patent No. 10,687,745	
Identifier	**Claim/Element**
Claim 27	
[20 Preamble]	A system configured to measure one or more physiological parameters of a user, the system comprising: a physiological monitoring device comprising:
[20A]	a plurality of light-emitting diodes configured to emit light in a first shape;
[20B]	a material configured to be positioned between the plurality of light-emitting diodes and tissue of the user when the physiological monitoring device is in use, the material configured to change the first shape into a second shape by which the light emitted from one or more of the plurality of light-emitting diodes is projected towards the tissue;
[20C]	a plurality of photodiodes configured to detect at least a portion of the light after the at least the portion of the light passes through the tissue, the plurality of photodiodes further configured to output at least one signal responsive to the detected light;
[20D]	a surface comprising a dark-colored coating, the surface configured to be positioned between the plurality of photodiodes and the tissue when the physiological monitoring device is in use, wherein an opening defined in the dark-colored coating is configured to allow at least a portion of light reflected from the tissue to pass through the surface;
[20E]	a light block configured to prevent at least a portion of light from the plurality of light-emitting diodes from reaching the plurality of photodiodes without first reaching the tissue; and
[20F]	a processor configured to receive and process the outputted at least one signal and determine a physiological parameter of the user responsive to the outputted at least one signal; and
[20G]	a processing device configured to wirelessly receive physiological parameter data from the physiological monitoring device, wherein the processing device comprises a user interface, a storage device, and a network interface configured to wirelessly communicate with the physiological monitoring device, and wherein the user interface includes a touch-screen display configured to present visual feedback responsive to the physiological parameter data.
[27]	The system of claim 20, wherein at least one of the plurality of light-emitting diodes is configured to emit light of a first wavelength and at least one of the plurality of light-emitting diodes is configured to emit light of a second wavelength, the second wavelength being different than the first wavelength.

[redacted]

U.S. Patent No. 7,761,127	
Identifier	**Claim/Element**
Claim 9	
[7 Preamble]	A physiological sensor capable of emitting light into tissue and producing an output signal usable to determine one or more physiological parameters of a patient, the physiological sensor comprising:
[7A]	a thermal mass;
[7B]	a plurality of light emitting sources, including a substrate of the plurality of light emitting sources, thermally coupled to the thermal mass,
[7C]	the sources having a corresponding plurality of operating wavelengths,
[7D]	the thermal mass disposed within the substrate;
[7E]	a temperature sensor thermally coupled to the thermal mass and
[7F]	[the temperature sensor] capable of determining a bulk temperature for the thermal mass, the operating wavelengths dependent on the bulk temperature; and
[7G]	a detector capable of detecting light emitted by the light emitting sources after tissue attenuation,
[7H]	wherein the detector is capable of outputting a signal usable to determine one or more physiological parameters of a patient based upon the operating wavelengths.
[9]	The physiological sensor according to claim 7 wherein the temperature sensor comprises a thermistor.

[redacted]

I. INTRODUCTION

Section 337 investigations are intended to protect genuine domestic industries against unfair competition—not to serve as a tool for creating litigation and business pressure where there is no competition at all. The hearing confirmed that there is no proper basis for finding a violation of Section 337 by Apple, and that Complainants are instead using this forum to create litigation pressure on Apple and clear a path for hoped-for future sales of the "Masimo Watch." In their rush to do so, Complainants filed prematurely; they had no protectable domestic industry when they initiated this action and still lack one today. Moreover, the patents that they have asserted have a long series of fundamental flaws.

The hearing testimony told the tale. Complainants' Chief Executive Officer, Joseph Kiani, conceded that one of the reasons for initiating this Investigation was his dissatisfaction with a federal district court's stay (pending IPR proceedings) of certain patent claims Masimo brought against Apple. Tr. 159:5-13. Masimo thus drafted and asserted new claims and brought the present action. The First Amended Complaint ("Complaint") asserted two purported domestic industries in need of protection against unfair competition: for the '127 patent, the "rainbow" sensors, and for the '745, '501, '502, and '648 patents, the "Masimo Watch [redacted]." Complaint ¶ 86. Yet Mr. Kiani conceded at the hearing that there is ***no*** competition (let alone unfair competition) in stores between the rainbow sensor or "Masimo Watch," on the one hand, and Apple Watch, on the other. Tr. 180:20-181:7. As the hearing unfolded, the evidence demonstrated that Complainants cannot meet the requirements to establish a legally-sufficient domestic industry.

Even as of the hearing itself—which took place over ten months after the Complaint was filed—Masimo's Chief Financial Officer, Micah Young, [redacted]

[redacted]. Tr. 514:16-19. And, the litigation "demonstration" of the Masimo Watch "physicals" [redacted] This and other hearing evidence confirmed that the "Masimo Watch" [redacted] The status of a domestic industry must be assessed as of the date of the complaint in the absence of "significant and unusual developments," and Complainants made no effort to identify such post-complaint developments—to the contrary, the evidence showed that the Masimo Watch project [redacted]

In short, for four of the patents-in-suit, the hearing demonstrated that Complainants prematurely filed a complaint asserting a domestic industry for a "Watch" project [redacted] For the other patent-in-suit, Complainants asserted a domestic industry based on a product that is sold in a different setting than Apple Watch, and that does not compete with Apple devices.

The hearing made vivid the very different contexts in which Masimo and Apple have focused their efforts. Masimo has focused on the ***clinical*** setting, *e.g.*, hospitals, doctor's offices, and home care under the direction of clinicians. Apple has focused on the consumer marketplace, and for Apple Watch, specifically on the ***consumer wearables*** setting. As six Apple engineers—five with Ph.D.s, the sixth the head of the Health Sensing Hardware group—testified, the commercial demands and engineering challenges of the clinical setting are dramatically different from those of the consumer wearables settings. Apple engineers had to overcome many obstacles

[redacted]

in creating a blood oxygen sensor for Apple Watch, including the complications of conducting measurements at the wrist; the need to fit the sensor inside a small device with many other components, without compromising the industrial design of Apple Watch; the difficulty of ensuring reliable measurements notwithstanding electromagnetic and vibrational interference from other components in the device; and the requirement for a device that works across a wide range of skin tones, body types, and consumer use patterns.

Through years of research and development, Apple's engineers overcame these obstacles and succeeded in creating the Blood Oxygen feature for Apple Watch—and did so without ***any*** use of Masimo confidential information or patented concepts. Contrary to the baseless allegations of copying levied by Complainants, Apple engineer after Apple engineer provided sworn testimony that they used no Masimo ideas, and instead built the Blood Oxygen feature based on their own ingenuity and hard work. Tr. [Venugopal] 833:11-17 ("Q. Dr. Venugopal, did you copy any other company's technology to make the blood oxygen feature for Apple Watch? A. No, I did not. Q. Did any of the colleagues you worked with in developing the blood oxygen feature for Apple Watch previously work at Masimo? A. No, they did not."); Tr. [Mehra] 893:9-17 ("Q. Have oy used any Masimo technology in any way in any of the work that you have done? A. No, I've not."); Tr. [Block] 914:1-7 ("Q. Dr. Block, did you take anything from Masimo in your work on Apple Watch? A. No. Q. Whose ideas are in the blood oxygen feature in Apple Watch? A. We developed that as a team independently. It's our ideas."); Tr. [Waydo] 933:5-11 ("Q. Did you or anyone on your team at Apple base any aspect of the design of Apple Watch on the design of a Masimo pulse oximeter? A. No."); *id.* at 950:1-15; Tr. [Land] 972:9-973:8 ("Q. To the best of your knowledge, sir, did any of the software or hardware developed by your team come from ideas that originated at Masimo? A. No."); Tr. [Mannheimer] 1007:22-1008:7 ("Q. From your position

at the heart of the research and development of the blood oxygen sensor for the Apple Watch, have you, Dr. Mannheimer, personally seen any evidence that any of the software or hardware came from Masimo ideas? A. No, I have not."). There is absolutely no evidence to the contrary.

The hearing evidence strongly suggested that ***Masimo***, not Apple, was engaged in copying—both during development of the Masimo Watch, and in drafting patent claims. Tr. [Kiani] 167:10-16. Tr. 1031:7-1032:4, 1033:10-1034:5; *see also* Tr. [Scruggs] 438:3-6

Yet Masimo's obvious effort to draft patent claims to cover Apple Watch—and then use those claims to secure an import ban on leading Apple Watch models, clearing a path for future sales of the Masimo Watch—has collapsed on the merits. The hearing evidence demonstrated the basic problems that Masimo faces. To draft claims to try to cover Apple Watch, Masimo was forced to use claim language directed to rudimentary technology common to both the clinical setting (from which the patents originated) and the consumer wearable setting (in which Apple Watch is sold). That rudimentary technology was disclosed in the prior art many times over, and in some instances many decades earlier.

[redacted]

Based on the hearing evidence, the asserted claims in those patents—as well as the claims in the ’127 and ’745 patents—should likewise be held invalid.

Masimo’s problems go beyond invalidity: despite stretching its patent disclosures to try to reach consumer wearable products, Masimo’s claim drafting did not stretch far enough—there are significant differences between the asserted claims and Apple Watch, and accordingly no infringement. The asserted claims of the ’501, ’502, and ’648 patents (“Poeze Patents”) all require a device that is both configured to measure blood oxygen and has a protrusion that is “over” or “above” the photodiodes—language that made sense in the context of the finger-clip sensors disclosed by the patents. But Apple Watch can never satisfy all these limitations, as it is only configured to measure blood oxygen when Watch is “face-up” where the alleged protrusion is ***under*** the photodiodes. The asserted claims of the ’745 require a material ***configured to change the shape*** of the light emitted from the LED, but the accused [redacted] does no such thing: light emitted from the (square) LEDs in the Accused Apple Watches spreads in all directions, naturally creating a circular shape both before and after it passes through the LED. The asserted claim of the ’127 patent requires “a thermal mass” used to achieve a “bulk temperature,” and Apple Watch has no such component. To the contrary, the accused printed circuit board (“PCB”) in Apple Watch was made as thin as possible and serves no thermal stabilizing function.

For all these patents, Complainants have failed to even produce sufficient evidence that its own products use the patents—nor have Complainants proffered reliable evidence of the requisite nexus between economic activities and the alleged domestic industry products.

* * *

Banning the import of highly popular commercial products with health and wellness features (including the accused blood oxygen sensor) requires a proper basis at any time—and certainly at this time, when the country is still suffering through a respiratory pandemic, severe supply chain disruptions, and high inflation. The question of the public interest is for another day, but it is impossible to reconcile the import ban that Complainants seek with the needs of consumers, the larger U.S. economy, and the public health and welfare.

The question for now is whether Complainants have met their burden to establish a Section 337 violation. The answer is decidedly no. Apple respectfully requests that the ALJ find there is no infringement of the asserted patent claims; that those claims are invalid; and that Complainants have failed to establish a proper domestic industry.

A. Procedural History

Complainants filed their Original Complaint on June 30, 2021 and their First Amended Complaint ("Complaint") on July 7, 2021. The Commission instituted this Investigation on August 13, 2021. The evidentiary hearing was conducted June 6-10, 2022.

B. The Parties

1. Masimo & Cercacor

Masimo Corporation is a medical technology company based in Irvine, California. DocID 770692. Since its founding, Masimo has focused on the clinical setting where it derives the vast majority of its revenues. Tr. [Kiani] 140:8-14; *see also* RX-1204C [Kiani Dep.] at 99:15-23 (estimating Masimo's clinical products account for over 90% of revenue).

Complainant Cercacor, also based in Irvine, California, was spun off from Masimo in 1998. Tr. [Kiani] 93:12-20. Cercacor conducts research and development in the field of noninvasive

[redacted]

patient monitoring technologies for use in clinical settings and licenses its technology to Masimo. Complaint ¶¶ 19-20.

2. Apple

Respondent Apple is a California corporation with its principal place of business in Cupertino, California. DocID 770692. Apple designs and manufactures a variety of consumer electronic devices, including personal and tablet computers, mobile communication devices, portable digital music and video players, and smart watches. Apple is, and has been for decades, one of the world's leading technology firms. *See, e.g.*, Tr. [Waydo] 933:12-934:10 (describing Apple's approach to technology development).

C. Overview of the Technology

The Asserted Patents all relate to non-invasive light-based physiological measuring devices. The basic components of such devices include light sources (such as LEDs) and detectors (such as photodiodes) as well as processors and circuitry to control the light source(s), circuitry to receive and analyze signals from the detectors, and circuitry to display measurements derived from those signals. *See, e.g.*, [Tr. Sarrafzadeh] 1049:14-23; Tr. [Warren] 1189:21-1192:22, 1193:7-22, 1213:4-1214:1, 1230:18-25, 1240:8-17; Tr. [Land] 959:3-13; RX-0458 [Mendelson] at Figs. 10.16, 10.12; RX-0381 [Yamada] at [0062], [0065]. "Pulse oximetry" refers specifically to noninvasive methods of calculating an individual's blood oxygen saturation, or SpO2 level. *See, e.g.*, Tr. [Mehra] 852:7-17.; RX-0035.0016 [Webster].

D. The Asserted Patents

1. U.S. Patent Nos. 10,912,501, 10,912,502, and 10,945,648

The Poeze Patents ('501, '502, and '648 patents) are titled "User-Worn Device for Noninvasively Measuring a Physiological Parameter of a User." They were filed on September

[redacted]

24, 2020—more than twelve years after the provisional application to which they claim priority —and only a week after the release of Apple Watch Series 6 on September 18, 2020. JX-001 ['501 patent]; JX-002 ['502 patent]; JX-003 ['648 patent]; Tr. at 138:1-13 (Apple Watch release dates); CX-1287 at 10; RX-0333.0011; Tr. [Cromar] 1028:5-10.

Each embodiment disclosed by the Poeze Patents is finger-clip sensor that is transmittance-based—*i.e.*, the light sources and detectors are on different sides of the tissue. Tr. [Warren] 1200:23-1201:13; *see generally, e.g.*, JX-001 ['501 patent]. The common specification for the Poeze Patents references the use of protrusions of various shapes at the measurement site, including protrusions that are "sized and shaped to conform the measurement site into a flat or relatively flat surface" or "to confirm the measurement site into a rounded surface, such as, for example, a concave or convex surface." *E.g.*, JX-001 ['501 patent] at 8:8-23. The specification identifies such measurement sites as including the "finger, toe, hand, foot, ear, forehead, or the like" but nowhere mentions the wrist. *E.g.*, JX-001 ['501 patent] at 15:21-23; Tr. [Warren] 1201:19-24; *see also* Tr. [Madisetti] 1385:22-24 (agreeing the Poeze Patents do not mention a "watch").

2. U.S. Patent No. 10,687,745

The '745 patent is titled "Physiological Monitoring Devices, Systems, and Methods," was filed on March 31, 2020, and claims priority to a provisional application filed on July 2, 2015, shortly after Apple's Series 0 Watch was first sold. *See* JX-009 ['745 patent]; Tr. [Venugopal] 818:10-15 (Series 0 released in April 2015); RX-0023 [Series 0 Press Release]. The '745 patent relates generally to "a non-invasive, optical-based physiological monitoring system." *Id.* at Title and Abstract. According to the sole inventor Mr. Al-Ali, the purported novelty of the '745 patent is changing the shape of the light from a first shape to a second shape. Tr. [Al-Ali] 334:9-14,

[redacted]

335:23-24; *see also* RX-1196C [Al-Ali] at 36:12-25, 42:16-23 ("Q. What do you consider to be new about the '745 patent? A. Shaping the light. Q. Anything else? A. That's -- shaping the lights.").

3. U.S. Patent No. 7,761,127

The '127 patent is titled "Multiple Wavelength Sensor Substrate," was filed on March 1, 2006, and claims priority to March 1, 2005. JX-007 ['127 patent]. The '127 patent relates generally to thermal issues in optical sensors. *Id.* at 2:57-65. Claim 7 of the '127 patent, from which asserted claim 9 depends, requires "a thermal mass" and "a temperature sensor thermally coupled to the thermal mass and capable of determining a bulk temperature for the thermal mass, the operating wavelengths dependent on the bulk temperature." *Id.* at 19:35-53. The claimed thermal mass is a component that stabilizes a bulk temperature. *Id.* at Abstract, 2:59-61; *see also* RX-1196C [Abdul-Hafiz Dep.] 52:4-10, 53:3-6, 53:10-21 ("Q. Would you agree that the thermal mass in the '127 patent stabilizes a bulk temperature for the emitters? A. It does."). According to Mr. Al-Ali, one of the named inventors, the '127 patent was designed to measure carboxyhemoglobin and methemoglobin and has "does not have anything to do with SpO2," nor has Masimo ever sold a product using the techniques described in the '127 patent to measure blood oxygen. Tr. [Al-Ali] 330:18-20, 331:1-21.

E. The Products at Issue

1. Masimo's Domestic Industry Products

a. Masimo Watch

The purported "Masimo Watch" serves as the basis for Complainants alleged domestic industry for the Poeze Patents and the '745 patent. Although intended for the consumer market and [redacted] (Complaint ¶ 86,

Ex. 27 ¶ 4), even today no Masimo Watch is available for purchase on the open commercial marketplace anywhere in the world. Tr. [Young] 513:11-23; *see also* Tr. [Kiani] 166:18-167:3; Tr. [Muhsin] 374:7-22 (confirming "Masimo Watch" is "not open to market" and "not available in a store"). (Tr. [Muhsin] 352:21-353:2), RX1186C.008; Tr. [Kiani] 176:19-177:16 Tr. [Muhsin] 385:11-25; *see also* 15:18-16:12 [Masimo's counsel] .

While the evidence makes clear the Masimo Watch project is—even today—far from complete, Masimo's witnesses testified inconsistently as to when the project began. Mr. Kiani Tr. [Kiani] 114:3-115:7; 119:4-8, 169:16-170:9. However, Mr. Al-Ali, whose responsibilities are to "oversee the technology development" at Masimo (Tr. 248:20-23) testified that (Tr. 250:3-11). According to Mr. Al-Ali, Masimo Tr. 250:12-14. Mr. Scruggs testified that he began working on the "Masimo Watch" project in . Tr. 437:17-20; *see also* Tr. [Muhsin] 342:16-20 (testifying that the "Masimo Watch" project

[redacted] *Id.* 254:4-17, 337:22-24.

[redacted], Masimo [redacted] of the "Masimo Watch." For purposes of satisfying the technical prong, Complainants expert Dr. Vijay Madisetti testified that [redacted] (CPX-0019C, CPX-0020C, CPX-0021C (used with CPX-0014), CPX-0029C (used with CPX-0014), CPX-0052C (used with CPX-0012C), CPX-0058 and CPX-065) and a "Masimo W1" (CPX-0146C)[1] practice the '745 patent (*e.g.,* CDX-0011C.095, CDX-0011C.095); that the same articles, except for CPX-0021C and CPX-0029C, practice the '501 and '648 patents; and that all except for CPX-0021C, CPX-0029C and CPX-0052C practice the '502 patent (*e.g.*, CDX-0011C.046). None of these articles is the "Masimo Watch" described in the Complaint. In fact, [redacted] Tr. [Scruggs] 454:3-455:13. Further, Complainants have admitted that all but two of these [redacted] *See* Sections XXXIV.C.1 and V.D.1, *infra*. The only "Masimo Watch" articles Complainants rely on [redacted]

[1] At the hearing, Dr. Madisetti testified that he had considered CPX-0157C, an alleged "Masimo W1," in forming his opinions. Tr. 704:2-709:24. However, any argument that CPX-0157c is an article that practices the asserted claims of the '501, '502, '648, or '745 patents for purposes of satisfying the technical prong is waived as that argument does not appear in Complainants' prehearing brief. *Compare* CPHB at 10 (only citation to CPX-157C in Complainants' prehearing brief appearing in a high-level introductory summary of the "Masimo Watch" project, [redacted] *with, e.g.*, CPHB at 61 (Complainants' claim-by-claim technical DI analysis for the '501 patent, stating "The Masimo W1—***represented by CPX-146C***—is a user-worn device that noninvasively measures physiological parameters including SpO2.")

[redacted]

CPX-0029aC; CPX-0052aC

b. rainbow sensors

Complainants rely on two alleged "categories" of "rainbow sensors" to meet the technical prong of the domestic industry requirement for asserted claim 9 of the '127 patent. The so-called "Current Rainbow Sensors" are characterized by a substrate [redacted], and the

so-called "Early Rainbow Sensors," characterized by Tr. [Goldberg] 627:6-13. Complainants provided no testimony or other evidence identifying the specific Masimo products alleged to incorporate either category of sensor.

2. The Accused Products

Apple released the first Apple Watch, *i.e.*, Apple Watch Series 0, on April 24, 2015. RX-0023; Tr. [Venugopal] 818:10-15; Tr. [Land] 956:23-957:1; Tr. [Sarrafzadeh] 1090:14-23; Tr. [Kiani] 138:1-4. Among many other features, Apple Watch Series 0 included a heart-rate sensing function that used noninvasive optical sensing methods. *Id.* at 818:16-819:7; *see also* Tr. [Waydo] 920:23-921:10. The optical hardware in Series 0 included multiple LEDs and multiple photodetectors. Tr. [Venugopal] 819:1-7.

Apple released subsequent series of Apple Watch that added numerous features and improved upon the pulse rate monitor and optical sensing hardware. *Id.* at 817:25-818:4. Across the various series of Apple Watch, *Id.* at 817:25-818:9.

Complainants accuse Series 6 and Series 7 of infringement ("Accused Apple Watches") and specifically the Blood Oxygen feature thereof. Apple released Series 6 on September 18, 2020. *See* RX-0333.0010 [Series 6 Press Release]; *see also* Tr. [Kiani] 138:11-16, 152:4-7. Among many other new features, the Series 6 models introduced a Blood Oxygen feature capable of reflectance-based pulse oximetry. RX-0333; *see also, e.g.*, CX-1705 [Series 6 Technical Specifications]. The optical hardware utilized by the Blood Oxygen feature in Apple Watch Series 7, released in 2021, was substantially unchanged relative to the optical hardware in Apple Watch

Series 6. Tr. [Venugopal] 818:5-9; Tr. [Land] 967:5-11 ; Tr. [Mehra] 878:17-21

Apple's development of the Blood Oxygen feature began following the completion of the heart rate sensor for Apple Watch Series 0, released in September 2014. Tr. [Land] 962:15-24. Dozens of Apple engineers spent years improving on the optical-sensing hardware from earlier generations of Watch to develop the Blood Oxygen feature. *E.g.*, Tr. [Mehra] 852:7-13 (explaining that "all of the work that [Apple's engineers] did to design, develop, and validate heart rate sensors over multiple generations of the watch was a great engineering base for [Apple] to build off of" in developing the blood oxygen sensor); *see also* Tr. [Waydo] 923:12-23. Significant effort was also spent on developing the highly sophisticated algorithm that processes signals captured by the Watch hardware into SpO2 measurements. For example, Dr. Steven Waydo—the director of Apple's Human Interface Devices group who are responsible for building algorithms for sensors in a variety of Apple products—testified that the engineers on his team, which was "just a small piece of the overall puzzle," spent "something like 20 or 30,000 hours of engineering time just on that [algorithm architecture." Tr. 919:1-8, 925:23-926:6.

Apple faced significant challenges in developing the Blood Oxygen feature, including challenges creating a feature that would be accurate across a wide range of users—and use cases; compatible with the numerous other features/components in Apple Watch; and in compliance with Apple's exacting design standards. *E.g.*, Tr. [Venugopal] 832:20-833:10 (describing design challenges); Tr. [Mehra] 853:22-854:5 (describing as "death by a thousand cuts" the "technical

2 "

[redacted]

tradeoffs we have to make among ourselves and other project or technology teams that are also competing for space in the Apple Watch"); *id.* 877:23-878-16 (discussing "engineering design constraints" for [redacted] PCB); Tr. [Waydo] 923:24-925:1 (discussing challenges created by a "poor quality signal posing as a high-quality signal" and solutions); Tr. [Block] 902:10-903:2 (describing as "extremely difficult" the work to "integrate [the Blood oxygen feature] into a very complicated, very small consumer electronic device"); Tr. [Land] 963:19-964:25 (testifying that "[t]he challenges … were many," including "fit[ting] into a product that had very little space for the resources needed" and developing something "to work across all of the human variation that existed in the world"); *id.* at 965:15-25 (summarizing prototype development depicted in RX-0094C.0008 [redacted] Tr. [Mannheimer] 998:21-999:11 ("Shrinking things down to be [a] much smaller package and use substantially less power and to be used by a consumer in a nonprescription environment would ultimately add to additional challenges to think through and work through.").

The optical hardware components designed by Apple for the Blood Oxygen feature include the [redacted]

3 "[redacted]

RX-0677C,

II. JURISDICTION

Apple does not dispute that the Commission has jurisdiction over the accused Apple Watch Series 6 and Series 7 products, which have been imported into the United States. *See* DocID 770046 (Apple's Stipulation Relating to Importation and Inventory).

III. LEGAL STANDARD FOR DOMESTIC INDUSTRY REQUIREMENT

Under section 337, complainants must demonstrate that a domestic industry "relating to the articles protected by the patent … exists or is in the process of being established." 19 U.S.C. §1337(a)(2). This requirement distinguishes section 337 proceedings from district court actions that any patent owner might bring. Under longstanding practice, the Commission assesses satisfaction of the domestic industry requirement ***as of the complaint filing date***. *Certain Coaxial Cable Connectors*, Inv. No. 337-TA-650, Comm'n Op. at 51 n.17 (Apr. 14, 2010) (DocID 422832) ("We note that only activities that occurred before the filing of a complaint with the Commission

[redacted]

are relevant to whether a domestic industry exists or is in the process of being established under sections 337(a)(2)-(3)."). The exceptions are narrow. "The Commission has explained that it will consider post-complaint evidence regarding domestic industry only in very specific circumstances, *i.e.*, when a significant and unusual development has occurred after the complaint has been filed." *Certain Thermoplastic-Encapsulated Electric Motors*, Inv. No. 337-TA-1073, Comm'n Op. at 7 (Aug. 12, 2019) (DocID 684974) (internal quotations and citations omitted). In *Thermoplastic Motors*, the Commission reaffirmed the "significant and unusual development" standard and applied it to claims of a domestic industry "in the process of being established." *Id.* at 8. Finding the standard not met in that case, *id*. at 7-8, the Commission disregarded post-complaint activities, *id*. at 12-13, and concluded that the complainant failed "to demonstrate that a domestic industry was in the process of being established in this investigation at the time of the complaint filing." *Id.* at 12. The Commission specifically rejected complainant's request to consider post-complaint evidence and thereby "treat the domestic industry analysis as a moving target." *Id.* at 8, n.11.

In this Investigation, Complainants have not asserted, and therefore have abandoned, any contention concerning the existence of "significant and unusual developments" that might support consideration of post-complaint evidence. CPHB at 230-31; Ground Rule 9.2. Furthermore, even if the contention had been preserved, Complainants presented no evidence at the hearing of any such "significant and unusual developments." To the contrary, Complainants' witnesses acknowledged the "Masimo Watch" [redacted]." Tr. [Kiani] 177:17-178:14; Tr. [Al-Ali] 338:12-15.

Complainants attempt to justify their reliance on post-complaint evidence by ignoring Commission precedent and pointing instead to the essentially standard-less, "flexible" approach applied by the ALJ in *Certain Digital Cameras*, Inv. No. 337-TA-1059, Order No. 52 (Feb. 20,

[redacted]

2018) (DocID 641181). CPHB at 230-31. Such reliance is misplaced. The ALJ's order in *Certain Digital Cameras* predates, and therefore does not consider, the Commission's opinion in *Thermoplastic Motors*—it runs directly counter to the Commission's rejection of a "moving target" approach to the domestic industry requirement. *Thermoplastic Motors*, Comm'n Op. at 8, n.11. The order also has no precedential value, as the investigation was terminated by settlement before the Commission issued a final determination. *Digital Cameras*, Notice of Termination Based on Settlement (Mar. 8, 2019) (DocID 669518).

Complainants' reliance on dictum from an even earlier case, *Certain Electronic Devices*, Inv. No. 337-TA-701, Order No. 58 at 6 (Nov. 18, 2010) (CPHB at 231), is similarly off point. In that case, the ALJ held that ***respondent's*** evidence indicating the domestic industry products "will shortly be obsolete" should ***not*** be considered in assessing the existence of a domestic industry, but considered instead in formulating any remedy. Order No. 58 at 7.

Complainants also seek to rely on post-complaint developments to support satisfaction of the technical prong. CPHB at 59-60, 140. That approach should also be rejected. "Both Federal Circuit law and Commission precedent require the existence of actual 'articles protected by the patent' in order to find that a domestic industry exists." *Thermoplastic Motors*, Comm'n Op. at 9 (citing *Microsoft Corp. v. ITC*, 731 F.3d 1354, 1362 (Fed. Cir. 2013)). The Commission has never found a domestic industry "in the process of being established" absent the existence of a physical, patent-practicing domestic industry article, consistent with the statutory requirement that the domestic industry "relat[e] to the articles protected by the patent." 19 U.S.C. §1377(a)(2); *see Thermoplastic Motors,* Comm'n Op. at 11-12.

Complainants rely on the ALJ's order in *Certain Mobile Devices with Multifunction Emulators*, Inv. No. 337-TA-1170, Order No. 19 at 8 (June 9, 2020), for the proposition that a "patent-

[redacted]

practicing article need not yet exist at the time of the Complaint" for a domestic industry "in the process" of being established. CPHB at 140. The cited order has no precedential authority, as on review of the final ID the Commission expressly "took no position" on the issue of domestic industry. Inv. No. 337-TA-1170, Comm'n Op. at 45 (July 27, 2021) (DocID 748039). Complainants' DI technical prong contentions rely on alleged actual practice of the asserted patents by the eight physical articles asserted as the "Masimo Watch" DI products, including the model W1 and other articles which Complainants acknowledge were [redacted]. CPHB at 9-12; *see also* RX-1447C.[4] In this Investigation, as in *Thermoplastic Motors*, complainants have failed to demonstrate the required "significant and unusual developments" to justify consideration of post-complaint evidence. Accordingly, all activities and developments after the Complaint filing date of July 7, 2021—including the exhibits listed in Appendix A—should be disregarded.

IV. '501, '502, AND '648 PATENTS

Far from showing that Apple "copied" the inventions of the Poeze Patents as Complainants allege, the evidence showed that it was ***Complainants*** that have attempted to compete unfairly, by dusting off old patent applications and filing new claims, [redacted] in an effort to capture the Watch and ultimately to exclude it from the market. Masimo delayed more than ***twelve years*** before filing the applications for the Poeze Patents on September 24, 2022—and ultimately did so only ***six days*** after the public release of Apple Watch

[4] Apple intends to file a motion to reopen the evidentiary record for purposes of admitting RX-1447C, as well as RX-1397C. Both of these exhibits were testified about during the evidentiary hearing by Professor Sarrafzadeh (Tr. [Sarrafzadeh] 1120:24-1121:6, 1127:3-7) but were inadvertently omitted from the parties' joint lists of admitted exhibits. Apple has reached out to Complainants regarding whether they will join this motion but has not yet received a response.

[redacted]

Series 6 on September 18, 2022. This effort to stretch claims to cover the Apple Watch fails on multiple grounds.

First, the asserted claims are invalid over the prior art. To find support in decade-plus old provisionals—which were directed toward products for use under clinical supervision—Complainants were forced to claim combinations of well-known, generic components used in light-based physiological measuring devices. As Professor Steven Warren—who has worked and published in the relevant field for decades (Tr. [Warren] 1181:23-1187:16; CX-335 [Warren CV])—confirmed, non-invasive physiological measuring devices have utilized the same components claimed in the Poeze Patents for decades. Light-based sensors have had four or more sets of LEDs for more than 30 years (*e.g.*, McCarthy [RX-0489] at Fig. 1A (1991)), four or more photodiodes arranged in a quadrant for more than 40 years (*e.g.*, Cramer [RX-0670] (1978)), openings and windows over photodiodes for more than 50 years (*e.g.*, Smart [RX-0473] (1971) and Cramer [RX-0670]), and convex protrusions that conform tissue for more than 50 years (*e.g.*, Smart [RX-0473]). *See* Tr. [Warren] 1190:1-1195:22; RDX-8.5–12 (describing state of the art, including with reference to RX-0473, RX-0489, RX-0670, and other prior-art references). It would have been obvious to a POSITA that these elements could be combined into a single device in the manner claimed, and in fact Robert Rowe and his colleagues at Lumidigm had done exactly that. His patent, U.S. Patent No. 7,620,212 ("Lumidigm") [RX-411], anticipates each asserted claim under 35 U.S.C. §102, or alternatively renders those claims obvious under §103 when combined with the knowledge of a POSITA and/or secondary references Seiko 131 [RX-0666], Cramer [RX-0670], Webster [RX-0035], and Apple '047 [RX-673].

Second, the asserted claims are invalid under §112. To create claims that use the well-known components listed above in specific combinations that Complainants attempted to map to

the Series 6, Masimo was forced to mix and match embodiments, and include elements taught nowhere in the specification. Nothing in the specification suggests Complainants themselves were in possession of the claimed combinations. In fact, ***Lumidigm*** contains a more complete disclosures of combinations covered by the asserted claims than the Poeze Patents themselves. The Poeze specification does not even disclose the use of a watch-like physiological measuring device such as Apple Watch at all *E.g.*, Tr. [Kiani] 147:3-10, 150:3-12. This mix-and-match approach is insufficient to meet the written description and enablement requirements, rendering the patents further invalid under §112.

Third, notwithstanding Complainants best efforts to cover Apple Watch when drafting the asserted claims, they did not reach far enough. Five of the six asserted claims require a user-worn device configured to measure a physiological parameter with a protrusion "***over***" or "***above***" the photodiodes.[5] But to be a user-worn device configured to measure the relevant physiological parameter (here, blood-oxygen saturation), the Accused Apple Watches must be positioned so that the "protrusion" is ***under*** or ***below*** the photodiodes. It is undisputed that Apple Watch ***cannot*** take a blood oxygen measurement when it is face-down—*i.e.*, when the protrusion is over or above the photodiodes. Further, the Accused Apple Watches do not have "openings" extending or provided "***through the protrusion***" or "***through holes***" as required by all six asserted claims. The only holes or openings through the alleged protrusion (the sapphire back crystal) are

Fourth, Complainants' prosecution strategy itself renders the asserted claims unenforceable under the doctrine of prosecution laches. Masimo has offered ***no*** reason for its

[5] All emphasis is added unless indicated otherwise.

twelve-year delay in filing the asserted claims, and in the interim period, Apple invested heavily in the development of the accused products and in the expansion of the consumer-wearables market generally. By waiting to draft the asserted claims with the accused products in hand, Masimo unreasonably and inexcusably delayed prosecuting those claims, causing Apple material prejudice.

Finally, Complainants have failed to show that any purported domestic-industry article practices the claims of the Poeze Patents, either now or at the relevant time when the Complaint was filed. Each asserted claim requires a ***user-worn*** device configured to ***measure a physiological parameter***. But the only "Masimo Watch" article Complainants allege practices the Poeze Patents

More fundamentally, Complainants have failed to show that ***any*** alleged "Masimo Watch" article is configured to measure a physiological parameter. Complainants introduced no source code whatsoever as would be necessary to make such a showing for these devices. As both Professor Warren and Professor Sarrafzadeh testified, the only demonstrations of these devices in the record are insufficient to conclude that the alleged articles are in fact measuring any physiological parameter (as opposed to, *e.g.*, displaying random numbers or trying, but failing, to calculate a physiological parameter). For all these reasons, as discussed in more detail below, Complainants' arguments with respect to the Poeze Patents fail.

With respect to all of the above issues, the testimony of Complainants' expert on the Poeze Patents (and the '745 patent), Dr. Madisetti, should not be credited. Dr. Madisetti is a professional expert with proffered "expertise" in areas ranging from power over ethernet to graphical user interfaces to virtualization. Tr. [Madisetti] 763:19-765:8; CX-329 [Madisetti CV]. Even for technologies he did not recognize (despite being listed on his CV) Dr. Madisetti agreed he

[redacted]

"probably" has served as a technical expert. *Id.* 764:12 ("Q. You've served as a technical expert in cases regarding networked storage devices? A. I'm not sure what you mean but probably."). Against Apple alone, he has testified in cases in numerous proceedings on technologies ranging from 4G to digital cameras, and made over a million dollars—perhaps much more—doing so. *Id.* 806:10-24; CX-329. His experience in the field of pulse oximetry is limited to "collaborat[ing]" on the alleged development of one pulse oximetry prototype—a project Dr. Madisetti has never written or spoken publicly about. Tr. [Madisetti] 668:1-670:10. As was made clear at the hearing, Dr. Madisetti's opinions extended only so far as the text on the demonstratives that he read them from—nearly verbatim. Without those prompts, he struggled to recall even the most basic points on cross-examination and offered internally inconsistent testimony. *See, e.g.*, *id.* 779:4-780:14 (agreeing that top of whiteboard showed "two circles," that were "not overlapping," and that bottom of whiteboard showed "two circles" that were overlapping, but then "disagree[ing]" that there were four circles). And Dr. Madisetti never even bothered to travel to inspect the "Masimo Watch" articles that are the keystone of Complainants' case for the Poeze and '745 patents. *Id.* 799:9-802:2.

While the opinions Dr. Madisetti did give should be discredited, those he did ***not*** give are fatal to Complainants' case. For example, and as discussed further below, Dr. Madisetti was unable to answer whether "Apple Watch cannot take a blood oxygen measurement face down," claiming—erroneously—that the question was "using terms in the claim." Tr. [Madisetti] 794:4-

[redacted]

12. Because he lacks knowledge of this basic operational principle—which is central to why the Accused Apple Watches do not infringe—his opinion that they do infringe is meritless.[6]

A. Level of Ordinary Skill in the Art

The parties agree a person of ordinary skill in the art ("POSITA") relating to the subject matter of the Poeze Patents as of July 3, 2008 would have a working knowledge of physiological monitoring technologies. The person would have had a B.S. degree in an academic discipline emphasizing the design of electrical, computer, or software technologies, in combination with training or at least one to two years of related work experience with capture and processing of data or information, including but not limited to physiological monitoring technologies. Alternatively, the person could have also had a Master of Science degree in a relevant academic discipline with less than a year of related work experience. Tr. [Warren] 1207:14-22; *see also* RDX-8.21 (summarizing a POSITA).

B. Noninfringement

None of the features Masimo has accused of infringement are features that make the Apple Watch unique. Instead, as referenced above, non-invasive physiological measuring devices have had four or more sets of LEDs for more than 30 years, four or more photodiodes arranged in a quadrant for more than 40 years, openings and windows over photodiodes for more than 50 years, and convex protrusions for more than 50 years. *See* Tr. [Warren] 1195:1-22.

1. No Protrusions, Openings, or Through Holes "Over" or "Above" Interior Surface or Photodiodes When Apple Watch Is Configured to

[6] Similarly, with respect to the '745 patent, Dr. Madisetti failed to offer—and admitted he could not say—whether the shape of light emitted from the LEDs had [redacted] Tr. [Madisetti] 782:21-783:12, 1384:23-1385:10; RDX12.5 (CX-0307i [Madisetti Op. Rpt. App'x I] at 17).

[redacted]

Measure Physiological Parameter ('501 Claim 12; '502 Claims 22 and 28; '648 Claims 24, 30)

The Accused Apple Watches do not infringe claims 12 of the '501 patent, 22 and 28 of the '502 patent, or 24 and 30 of the '628 patent because the protrusion on the back of Apple Watch (and alleged "openings" and/or "through holes") are not arranged "***over***" or "***above***" the "interior surface" or "photodiodes" when the device is "configured to non-invasively measure" blood oxygen saturation—the accused physiological parameter and its processors are "configured to" "calculate," "output" or "determine" such measurement.

Each of these five claims explicitly requires a user-worn device configured to take a physiological measurement and a protrusion that is "over" or "above" the interior surface or photodiodes:

- '501 patent claim 12 requires a user-worn device "configured to noninvasively measure a physiological parameter" [1 Preamble[7]] with "one or more processors configured to receive one or more signals from the photodiodes and calculate a measurement of the physiological parameter of the user" [1F] and a protrusion "arranged ***over***" the interior surface [1C] and openings "***over***" photodiodes [1D];

- '502 patent claim 22 requires a user-worn device "configured to non-invasively measure on oxygen saturation of the user" [19 Preamble] with "one or more processors configured to receive one or more signals from at least one of the four photodiodes and output measurements responsive to the one or more signals" [19E] and a protrusion with openings positioned "***over***" photodiodes [19C];

- '502 patent claim 28 requires a user-worn device "configured to non-invasively measure an oxygen saturation of a user" [28 Preamble] with "one or more processors configured to receive one or more signals from at least one of the photodiodes and calculate an oxygen saturation measurement of the user" [28I]) and a protrusion "arranged ***above*** the interior surface," also with openings "above" the interior surface ([28C], [28E]); and

- '648 patent claims 24 and 30 require a user-worn device "configured to non-invasively determine measurements of a user's tissue" [20 Preamble] with "one or more processors configured to receive one or more signals from at least one of

[7] Complainants do not contest, for purposes of this Investigation, the preambles of all asserted claims are limiting. Joint Stipulation of Facts ¶ 9 (May 13, 2022) (Doc. ID 770692).

[redacted]

> the photodiodes and determine measurements of oxygen saturation of the user" [20E]) and a protrusion with "a plurality of through holes, each through hole … ***over*** a different one of the at least four photodiodes" [20D].

But the Blood Oxygen feature in the Accused Apple Watches is ***inoperable*** when the alleged protrusion—the back crystal dome on the bottom of Apple Watch—and the alleged "openings"/"through holes" are positioned "***over***" or "***above***" the accused "interior surface" and photodiodes. *E.g.*, Tr. [Waydo] 926:23-927:9, 928:9-929:11, 930:18-931:14; Tr. [Warren] 1250:23-1252:6; RX-0307C.0004; CX-0010.3; RX-0812.0001; RX-0748; RX-0700; RDX-8.140C (summarizing RX-0307C, RX-0700, RX-0748, RX-0812).

Complainants do not contest that the Accused Apple Watches cannot take a blood oxygen measurement if Watch is face-down (*i.e.*, when the alleged "protrusion" is "***over***" or "***above***" the "interior surface" and photodiodes). Nor could they. Apple's engineers, algorithm documents, and product literature all confirm that, in order to measure a user's average blood-oxygen saturation, Apple Watch cannot be face down (*i.e.*, in a configuration in which the protrusion is "***over***" or "***above***" the accused interior surface housing the photodiodes). Apple's orientation requirement is markedly different from the disclosure of the Poeze Patents; the only portion of the patent specification using the positional "over" language with respect to the protrusion refers to a transmissive, finger-worn embodiment (a design commonly used in clinical settings) where the protrusion is positioned "over" (*i.e.*, above) the photodiodes when configured to take a measurement. JX-001 ['501 patent] 24:27-33 (describing advantages of "placing the partially cylindrical protrusion 605 over the photodiodes"), Fig. 6E.

Undisputed testimony from Apple engineers confirms that the portion of the Accused Apple Watches Complainants have identified as the accused "protrusion" must be positioned under (*i.e.*, not "***over***" or "***above***") the "interior surface" or photodiodes when the Accused Apple

Watches are configured to measure a user's average blood-oxygen saturation. Dr. Steven Waydo, who oversees the development and design of the algorithm for the Blood Oxygen feature, testified that Apple "restrict[s] [its blood oxygen] measurements to when the watch is oriented more or less face-up," and that . *Id.* 919:1-8, 926:23-927:18 (blood oxygen readings are "restricted ... to when the watch is orientated more or less face up"); *see also* CX-0299C [Waydo Dep.] 169:20-172:10 ("Q. If the Apple Watch is facedown, will it ever perform a blood oxygen measurement? THE WITNESS: No." *Id.* at 172:7-10.) Other engineers unanimously confirmed this restriction. CX-0281C [Block Dep.] 276:22-277:20 (confirming Apple Watch cannot take blood oxygen measurements when positioned face-down, and that when Apple Watch is positioned face-up to take blood-oxygen measurements, "the [back-crystal] dome is ***below*** all of the photodiodes in the "); *see also id.* 107:18-109:12, 112:12-19, 113:17-114:4; Tr. [Venugopal] 847:20-23 ("Q. …When you're wearing your Apple Watch, where are the relative to the LEDs? A. When you're wearing the watch, the are under the LEDs."); CX-0289C [Mannheimer Dep.] 188:7-11 ("Q. Where is the sapphire assembly placed relative to the LEDs and photodiodes? … THE WITNESS: In use, the back crystal is below the LEDs and photodiodes.").

This engineer testimony was corroborated by documentation. For example, the —which describes the algorithm used for the blood-oxygen feature—confirms that the face-down posture is "unsupported" for both background and on-demand blood-oxygen readings:

RX-0307C.0004 Tr. [Waydo] 928:9-929:11 (describing RX-0307C, noting that "it really boils down to the watch being more or less level and face up"). Apple's user-guide website similarly confirms that Apple Watch must be face-up to generate a blood-oxygen measurement. *See* CX-0010.3 ["How to use the Blood Oxygen app on Apple Watch Series 6 or Series 7"] (instructions on "[h]ow to take a blood oxygen measurement," including to "[s]tay still, and make sure your wrist is flat ***with the Apple Watch facing up***"); *accord* RX-0812.0001 ["How to use the Blood Oxygen app on Apple Watch Series 6 or Series 7"]; Tr. [Waydo] 930:18-931:14 (describing CX-0010 and noting that "if the user is moving or if the watch isn't facing up, it will refuse to produce a [blood oxygen] measurement").

Professor Warren also described this evidence in detail and confirmed non-infringement on this basis. He confirmed that the "face-up" requirement is document in both external Apple user guides (*e.g.*, RX-812) as well as the (RX-307C), and he also personally tested the accused products and confirmed they will not generate blood-oxygen

[redacted]

readings when face-down, as depicted in his photographs of the test results for the Series 6 (RX-0748) and Series 7 (RX-0700). *Id.* at 1250:23-1252:6; *see also* RDX-8.142C (summarizing RX-0307C, RX-0748, RX-0700, RX-0812). Complainants have not identified any evidence to the contrary.

Complainants' expert Dr. Madisetti—treating the "over" and "above" limitations indistinguishably[8]—ignored these terms all together in his analysis to argue that "a person of ordinary skill in the art would understand that a protrusion, openings, and through holes are over the photodiodes and interior surface regardless of orientation when in use." Tr. [Madisetti] 700:20-23; *see also* CDX-0011C.041. When shown an Apple Watch Series 7 (RPX-2) during his cross-examination, Dr. Madisetti confirmed that the words "over" and "above" played no role in his analysis—testifying that the accused protrusion is "over" or "above" the photodiodes in his opinion in both of the following orientations:

Photographs of RPX-2 [Apple Watch Series 7]; *see* Tr. [Madisetti] 792:16-20 ("Q. Can you see it? I'm holding [RPX-2] ***face up***, Dr. Madisetti. A. Yes, I can. Q. Okay. And ***in your opinion the***

[8] Dr. Madisetti identified the back crystal as the alleged "protrusion" and relied on the same evidence that it was "over" or "above" the interior surface/photodiodes for all of the relevant limitations. *See, e.g.*, Tr. [Madisetti] 681:12-683:17 ('501 patent limitations [1C] and [1D]); *id.* 687:16-688:8, 690:22-691:19, 696:16-697:3, 698:8-699:3; CDX-0011C.016, .017, .021, .022, .025, .026, .034, .037.

back crystal that you have said is the convex protrusions is ***currently over the photodiodes***, correct? A. As per the claim, ***yes***, it is described and supported by Apple's own documentation and – Q. We'll get to that in a moment. If I turn [RPX-2] upside down, ***the watch is now face down***. It's still your position that ***the back crystal dome is over the photodiodes***, correct? A. ***Yes***.).[9]

Dr. Madisetti further ignored the additional requirements of the asserted claims that the user-worn device must not only have a protrusion "over" or "above" the photodiodes but ***also*** be "configured" to measure the accused "physiological parameter." He offered ***no opinion*** that Apple Watch at any time can satisfy all limitations as necessary to show infringement. Dr. Madisetti appeared to have an uncertain understanding of the posture requirement of Apple Watch, was unable to answer basic questions about that requirement, and failed to consider the source code for the [redacted] algorithm that bears directly on these disputed limitations. Tr. [Madisetti] 794:4-12 (unable to answer question of whether "Apple Watch cannot take a blood oxygen measurement face down," incorrectly insisting that this question involved "terms in the claim"); *id.* 795:22-796:1 (confirming failure to review source code).

Finally, Dr. Madisetti opined that language in an Apple document describing [redacted] ([redacted] supposedly contradicts Apple's non-infringement argument (Tr. [Madisetti] 700:24-701:11), but ignored that this document used the word "above" strictly in reference to a particular illustrative figure. *See* CX-0052C.5 [redacted]

[9] Dr. Madisetti also attempted to analogize the back crystal of Apple Watch to a bandage. Tr. [Madisetti] 701:12-15 ("[I]f I put a Band-Aid on a scratch on my hand, for example, the Band-Aid is over the scratch, and the Band-Aid is always over the scratch respective [sic] of the orientation of my hand."). But this analogy elides the claim requirements concerning ***configuration*** for a given function. Unlike a bandage—which is configured and designed to provide the relevant functionality (protecting a wound) in ***all*** orientations—Apple Watch is configured ***not*** to perform the relevant functionality (generating a blood-oxygen measurement) when in certain orientations.

[redacted]

[redacted] As Dr. Madisetti acknowledged during his direct examination, in this figure, "[t]he wrist is located above the blue":

[redacted]

Tr. [Madisetti] 701:7-11; CPX-052C.5. In other words, as shown in this figure, Apple Watch would be face-down with the wrist on top—*i.e.*, in an orientation where it is not configured to take a blood-oxygen measurement.[10]

Complainants and Dr. Madisetti have failed to show the alleged "protrusion" (*i.e.*, the back crystal) is "***over***" or "***above***" the interior surface and the photodiodes when the Accused Apple Watches are "configured to noninvasively measure," "calculate," "determine," or "output" the accused physiological parameter as required by the asserted claims. It is not. Because the Accused Apple Watches can never be configured to calculate the accused physiological parameter ***and*** have a protrusion over or above the photodiodes, they can never be a system that meets all claim elements and they therefore do not infringe claim 12 of the '501 patent, claims 22 or 28 of the '502 patent, or claims 24 or 30 of the '648 patent. *See Nazomi Commc'ns, Inc. v. Nokia Corp.*, 739

[10] Notwithstanding his direct testimony that the wrist would be "above the blue" (Tr. [Madisetti] 701:7-11), on cross-examination Dr. Madisetti erroneously disagreed that Apple Watch in this configuration would be face-down further underscoring his lack of understanding of the structure and operation of the Accused Apple Watches. *Id.* 795:10-21.

[redacted]

F.3d 1339, 1345-46 (Fed. Cir. 2014) (no infringement where product had hardware but not software enabling infringement).

2. No "Through Holes" or "Openings" "Through" the Protrusion ('501 Claim 12; '502 Claims 22 and 28; '648 Claims 12, 24, and 30)

The Accused Apple Watches also do not have "openings" extended or provided "***through the protrusion***" or "***through holes***" as required by all asserted claims of the Poeze Patents. JX-001 ['501 patent] claim 12 (requiring a "plurality of openings extending through the protrusion and positioned over the three photodiodes" [1D]); JX-002 ['502 patent] claim 22 (requiring "separate openings extending through the protrusion" [19C]); JX-002 ['502 patent] claim 28 (requiring "a plurality of openings in the convex surface, extending through the protrusion" [28F]); JX-003 ['648 patent] claim 12 (requiring a "plurality of openings provided through the protrusion" [8E]); JX-003 ['648 patent] claims 24 and 30 (requiring a "a protrusion comprising … a plurality of through holes" [20D]).

Dr. Madisetti effectively ignored the requirement in the asserted claims that the openings or holes be ***"through"*** the protrusion. Dr. Madisetti instead identified a gap ***between*** the photodiodes and the alleged protrusion—visible only when Apple Watch is torn down—as the openings. As shown by his annotated figure and described by Dr. Madisetti: "as you can see ***from the tear down*** … [t]he openings, for example, are directly located in this case extend through ***to the protrusion*** to the detector:"

[redacted]

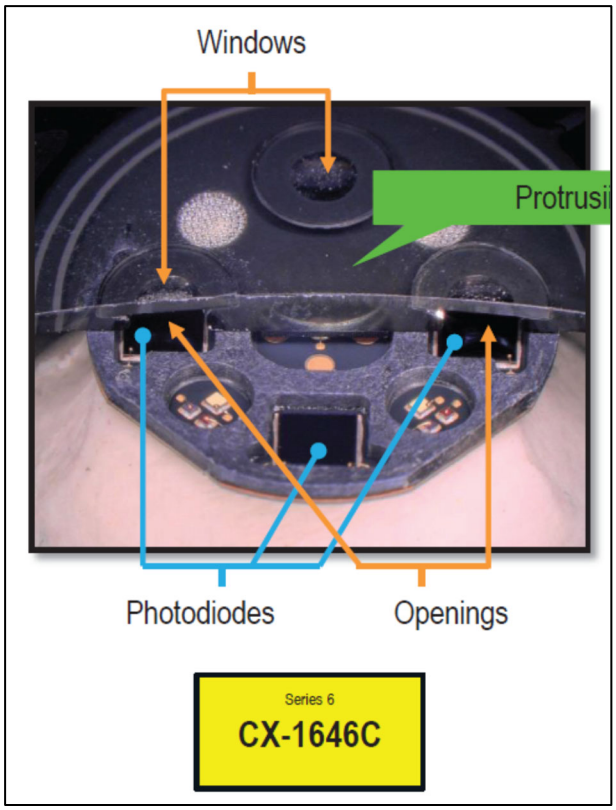

Tr. [Madisetti] 682:12-682:25; CDX-0011C.017. Dr. Madisetti then testified that other evidence [redacted] Tr. [Madisetti] 683:1-9.[11] [redacted] This was confirmed by the very deposition of Dr. Block on which Dr. Madisetti relied: [redacted]

[11] Dr. Madisetti did not offer any additional evidence on the comparable limitations in the asserted claims of the '502 and '648 patents, but only incorporated by reference his analysis for '501 patent limitation [1D]. *See* Tr. [Madisetti] 687:16-688:8, CDX-0011C.021, and CDX-0011C.022 ('502 limitations [19C] and [19D]); *id.* 690:22-691:19 and CDX-0011C.026 ('502 limitations [28F] and [28G]); *id.* 696:16-697:3 and CDX-0011C.034 ('648 limitation [8E]); *id.* 698:8-699:3 and CDX-0011C.037 ('648 limitation [20D]).

it. The [completed] back crystal does not." CX-0281C [Block Dep.] 246:02-23; *see also id.* 241:06-17, 243:08-14, 246:2-12, 255:3-11.

As Dr. Block explained at the hearing, Tr. [Block] 901:16-902:3 This is confirmed by the Accused Apple Watches themselves and engineering drawings. RPX-1; RPX-2; CX-68C.001 CX-70C.001 As such, the finished Accused Apple Watches, in their final assembled form, have no holes.

The Accused Apple Watches therefore do not infringe the asserted claims because they no longer have openings or holes ***through*** the protrusion. Tr. (Warren) at 1252:7-1253:3 RDX-8.143C (summarizing RPX-1, RPX-2, CX-0068C, CX-0070C); *see also* Tr. [Block] 902:4-9 ("Q. Are there holes through the back crystal in its final assembled form? A. No. Q. Are there openings in the back crystal in its final assembled form? A. No."); CX-0291C [Mehra Dep.] 73:21-74:8 CX-0281C [Block Dep.]

[redacted]

241:6-17 ("The back crystal of the watch doesn't have openings. It's a completely closed surface."); CX-0289C [Mannheimer Dep.] [redacted].

Because Dr. Madisetti failed to identify any opening ***through the protrusion*** in the final Accused Apple Watches (there are none), Complainants have failed to show that the Accused Apple Watches infringe under any understanding of "opening." However, Dr. Madisetti's new claim construction—offered for the first time at trial—should also be rejected. During direct examination, Dr. Madisetti suggested anything that "allow[s] light to pass" may be an opening. Tr. 683:10-17 ("Q. Dr. Madisetti, can you explain what -- how the features you've identified as openings relate to being openings, what do they allow to pass? A. They allow light to pass, and they are, therefore, one feature of an opening is that they allow light to pass from the tissue to the detectors, and these are openings that allow the accused products detectors to receive the light."). This argument is inconsistent with the plain and ordinary meaning of "opening" or "hole."[12] *See, e.g.*, CX-0281C [Block Dep.] 272:10-17 ("[T]he fact that light can pass through something does not mean that it's an opening."). Dr. Madisetti therefore needed to argue that his interpretation was supposedly bolstered by "the specifications' clear statements that openings or through-holes can be made from or include glass or other transparent material." Tr. [Madisetti] 702:8-703:10. But Dr. Madisetti's interpretation appears to conflate the meaning of "opening" or "through hole" with the separate term "window" used in the claims, and it ignores portions of the specification

[12] Regardless of whether Dr. Madisetti opinions on the construction of "opening" are permissible, they certainly should not apply to the separate "through hole" language found in '648 patent claims 24 and 30.

[redacted]

that contradict his preferred interpretation (including for the same Figure 7B he relied upon) by explaining that openings can be filled—implying that any such filled opening would no longer be ***through the protrusion***, as required by the asserted claims. *E.g.*, JX-001 ['501 patent] 27:20-22 (for Fig. 7B, "[o]ne or more components of conductive glass 730*b* can be provided ***in the openings*** 703"); *see also id.* at 37:37-39 ("Each of the windows 1492*a*, 1492*b* can include glass, plastic, ***or can be an opening without glass or plastic***."); *id.* at 26:46-47. Given these disclosures it is clear an "opening" or "hole" in the context of the asserted claims should be given its plain an ordinary meaning—a void into which other material can be placed—and is something different than a window or other optical apertures through which light may pass.

Dr. Madisetti's view of how a POSITA would understand the term "opening" is not correct, and there are no openings ***through the protrusion*** as the claims require. *See* Tr. [Warren] 1252:7-25. This position is both accurate and consistent with the specification, including Figure 3C—described by Mr. Kiani as emblematic of his supposed invention—depicts openings as unobstructed, with no glass or other barrier, "all the way" from the user's tissue to the photodetector. Tr. [Kiani] 101:6-12 ("Q. And if we go back to Fig. 3C, did I hear you or understand you, did the hole or the well, did that go all the way to the tissue in Fig. 3C? A. It did. It did. And then down to the floor of the detector …."); *id.* at 146:13-22.

[redacted]

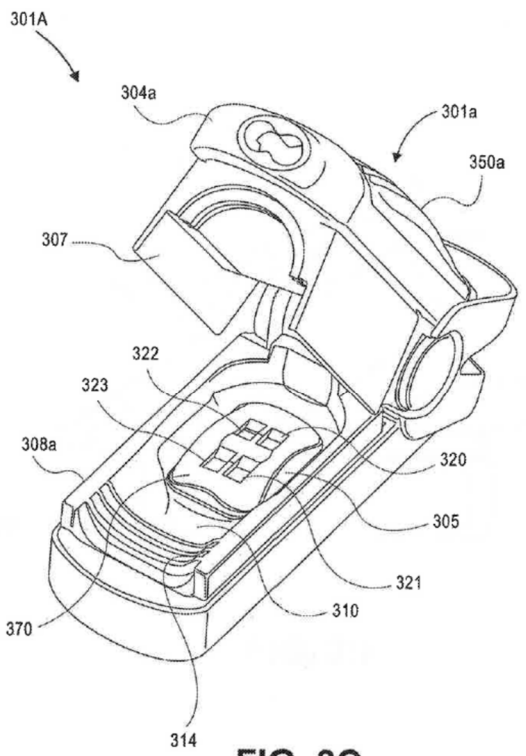

FIG. 3C

For the reasons given above, the Accused Apple Watches do not infringe claim 12 of the ’501 patent, claims 22 or 28 of the ’502 patent, or claims 12, 24, or 30 of the ’648 patent.

3. No Indirect Infringement (’502 Claim 28)

Complainants have failed to demonstrate that Apple engages in any acts of contributory infringement or actively induces infringement of claim 28 of the ’502 patent, including in connection with providing a strap or instructing users to attach a strap. To show induced infringement, Complainants must demonstrate that Apple “knowingly induced infringement and possessed specific intent to encourage another’s infringement.” *Niazi Licensing Corp. v. St. Jude Med. S.C., Inc*., 30 F.4th 1339, 1351 (Fed. Cir. 2022). Complainants made no such showing. Dr. Madisetti offered no opinions on the issues of inducement or contributory infringement, including no opinion that Apple acted with the specific intent to encourage third parties (the “users”) to directly infringe any Asserted Claim. Nor did he opine on whether Apple was aware of the patent

[redacted]

and knew that the induced acts, if taken, would constitute infringement of the patent, nor does he offer an opinion that Apple believed there was a high probability that the acts by the alleged direct infringer infringed the patent, and the alleged infringer took deliberate steps to avoid learning of that infringement. Tr. [Madisetti] 690:22-696:15 (complete analysis for '502 claim 28). The only evidence confirms that Apple was ***not*** aware of the Poeze Patents. *See* CX-1254C [Apple Responses to First Set Interrogatories] at 35 (stating that Apple first became aware of the Poeze Patents on or around June 30, 2021, the date Complainants file their public complaint in this Investigation). Nor could Apple have been aware of the Poeze Patents as they were not applied for until ***after*** the Series 6 launched.

For contributory infringement, Complainants have similarly introduced no evidence, and Dr. Madisetti offered no opinion that Apple knew that its products were especially made or especially adapted for use in an infringement of any asserted claim, and not a staple article or commodity of commerce suitable for substantial non-infringing use. Dr. Madisetti also offered no opinion that Apple was aware of asserted claims and knew that the component or apparatus was especially made or adapted for use in an infringing product or method. Tr. [Madisetti] 690:22-696:15 (complete analysis for '502 claim 28). Because "contributory infringement requires knowledge of the patent in suit and knowledge of patent infringement," Complainants' claim is deficient. *Nalco Co. v. Chem-Mod, LLC*, 883 F.3d 1337, 1356 (Fed. Cir. 2018) (quoting *Commil USA, LLC v. Cisco Sys., Inc.*, 575 U.S. 632, 638 (2015)).

For the reasons given above, Apple has not engaged in acts of contributory infringement or actively induce infringement of any asserted claim, including claim 28 of the '502 patent.

C. No Domestic Industry – "Technical Prong"

Complainants have failed to meet their burden of showing that any of the Masimo Watch they rely on—CPX-0019C, CPX-0020C, CPX-0052C, CPX-0058C, CPX-0065C—or the "Masimo W1" (CPX-0146C) (collectively, the "Poeze DI Articles") practice any of '501 patent claim 12, '502 patent claim 28[13], or '648 patent claims 12, 24 and 30 ("Asserted Poeze DI Claims") either now or at the relevant time of the filing of the Complaint. As discussed below, That device cannot satisfy the technical prong, including because it is indisputably ***not*** a "***user worn*** device" as required by all the Asserted Poeze DI Claims. Moreover, Complainants have failed to show any of the Poeze DI Articles practice any of the Asserted Poeze DI Claims, including because they have failed to show that the articles are configured to noninvasively measure a physiological parameter or have processors configured to do so. Complainants introduced ***no*** source code to make such a showing, instead claiming that demonstrations of the articles prove this point. But the only results of any demonstrations in the record are those witnessed and recorded by Apple's experts Professors Sarrafzadeh and Warren.

[13] Complainants did not allege either in their pre-hearing brief or at the hearing that CPX-052 practices '502 patent claim 28. CPHB at 11; Tr. [Madisetti] 676:4-6; 709:4-9. Any such argument is therefore waived. *Certain Endoscopic Probes for Use in Argon Plasma Coagulation* Systems; 337-TA-569, Order No. 45 at *2 (Oct. 1, 2007) (deeming waived arguments presented for the first time in the post-hearing brief); G.R. 9.2 ("Any contentions not set forth in detail as required herein shall be deemed abandoned or withdrawn").

[redacted]

1. No Patent-Practicing Article Existed As Of The Complaint

Evidence at the hearing confirmed that CPX-0019C, CPX-0020C, CPX-0058C, CPX-0065C and the "Masimo W1" (CPX-0146C) [14] [redacted]

Masimo's Director of Sensor Design Stephen Scruggs testified that CPX-0019C and CPX-0065C [redacted]." Tr. [Scruggs] 398:20-23; Tr. [Sarrafzadeh] 1121:9-24. [redacted] And in any event Mr. Scruggs agreed that at least [redacted]. Tr. [Scruggs] 457:12-457:25; Tr. [Scruggs] 460:23-461:16; RX-1183C.0037-39 ([redacted]). In fact, [redacted]

Mr. Scruggs similarly confirmed that [redacted] Tr. [Scruggs] 459:4-460:7; Tr. [Sarrafzadeh] 1121:9-24; RX-1183C.0035-

[14] In their prehearing brief, Complainants relied solely on CPX-0146C as representative of the "Masimo W1" for purposes of the technical prong. CPHB at 12, 61. Any argument that CPX-0155C (an article not relied upon or discussed at all by Complainants' expert Dr. Madisetti at the hearing) or CPX-0157C (a "W1" allegedly inspected by Dr. Madisetti, Tr. [Madisetti] 709:23-24) is therefore waived. As Dr. Madisetti acknowledged, CPX-0157C differs from CPX-0146C [redacted] (Tr. [Madisetti] 804:14-805:17) and Complainants have made no showing that CPX-0146C is in fact "representative" of CPX-0155C or CPX-0157C. In any event, [redacted] Tr. [Scruggs] 398:24-399:14; Tr. [Muhsin] 350:11-22; 368:12-17; 375:12-376:3. And for the reasons discussed below, Complainants have failed to show that any "W1" practices the Asserted Poeze DI Claims.

[redacted]

37. And as Mr. Scruggs also confirmed, [redacted]. Tr. [Scruggs] 460:8-12.

With respect to CPX-0020C and the "Masimo W1," Mr. Scruggs admitted that those devices [redacted]. He testified that CPX-0020C "[redacted] Tr. [Scruggs] 458:1-459:2; *see also* RX-1183C.0014 [redacted] And while Mr. Scruggs did not testify to any date of creation for CPX-0146 specifically, the "W1" he did discuss, CPX-0155C [redacted] Tr. [Scruggs] 398:24-399:14. Other testimony confirmed that CPX-0146C was similarly [redacted] *See, e.g.*, Tr. [Muhsin] 350:11-22 [redacted] 368:12-17; 375:12-376:3 (each of CPX-0146C, CPX-0155C and CPX-0157C was [redacted] *see also* Tr. [Sarrafzadeh] 1121:9-24.

Because Complainants have failed to allege or show any significant and unusual circumstances that would justify reliance on post-Complaint evidence (Section III, *supra*), none of these articles—[redacted]—may be properly considered for purposes of satisfying the technical prong, leaving only CPX-0052C. However, while Mr. Scruggs testified that CPX-0052C [redacted] (Tr. [Scruggs] 396:2-13), Complainants never identified [redacted] (RX-1183C.0035-38)—and Complainants introduced no evidence to corroborate CPX-0052C's [redacted] In any event, Mr.

Scruggs confirmed that CPX-0052C . Tr. [Scruggs] 462:1-463:22; 1121:9-24 (Sarrafzadeh); RX-1183C.0037. Accordingly, CPX-0052C Mr. Scruggs' testimony (Tr. [Scruggs] 476:5-20)

Even if the ALJ concludes CPX-0052C , it is indisputable that CPX-0052 cannot satisfy the technical prong. Complainants have failed to even allege that CPX-0052C practices claim 22 of the '502 patent. Further, as discussed below, CPX-0052C fails to meet the remaining Asserted Poeze DI Claims at least because it is ***not*** "a ***user worn*** device." Notwithstanding Dr. Madisetti's inability to say so (Tr. [Madisetti] 802:23-803:9), it is apparent to any lay observer that CPX-0052 Indeed, Masimo's Mr. Scruggs confirmed that CPX-0052 Tr. [Scruggs] 463:23-464:3. Tr. [Scruggs] 462:11-19.

That Complainants lacked a patent-practicing article at the time of the Complaint is not surprising. As the evidence showed, Complainants rushed to file a Complaint in this forum because it was unhappy with the pace of district court proceedings that had been stayed-in-part pending *inter partes* reviews. Tr. [Kiani] 158:15-159:13; 164:13-18.

[redacted]. RX-1209C [Scruggs Jan. 6 Dep.] 34:19-35:18 [redacted] Tr. [Scruggs] 454:3-455:13; Tr. [Scruggs] 398:24-399:14 [redacted] RX-1209C [Scruggs Jan. 6 Dep.] 173:11-175:11; 241:4-8. [redacted] RX-1209C [Scruggs Jan. 6 Dep.] 177:24-178:6 [redacted]. As the evidence indicates, [redacted]

2. "Masimo Watch" Articles Do Not Practice the Poeze DI Claims

a. "Masimo Watch" Articles Do Not Practice '501 Claim 12

(1) CPX-0052C and CPX-0058C are not "a user-worn device" [1 preamble], [12]

CPX-0052C and CPX-0058C are not "user worn device[s] and therefore do not practice the preambles of the Asserted Poeze DI Claims. As Mr. Scruggs testified, neither CPX-0052C or CPX-0058C [redacted] Mr. Scruggs had to [redacted] Tr. [Scruggs] 460:13-22; 463:23-464:3. As Professors Warren confirmed, these articles therefore do not meet the limitations relating to a "user-worn device." Tr. [Warren] 1259:4-8. Complainants' expert Dr. Madisetti offered nothing more than a conclusory statement that the devices themselves "all confirm that it's a user-worn device." Tr. 710:23-711:10. But Dr.

Madisetti did not (and could not) offer any explanation as to how CPX-052C or CPX-058C satisfy the requirement of a "user worn" device. They do not. Further, Dr. Madisetti's inability to testify as to whether CPX-052C Tr. [Madisetti] 802:23-803:9 CDX-0011C.00048 (showing CPX-0052).

(2) Articles are not "configured to noninvasively measure a physiological parameter" [1 preamble] and lack "one or more processors configured … to calculate a measurement of the physiological parameter of the user" [1F]

Complainants failed to show that ***any*** of the Poeze DI Articles is "configured to noninvasively measure a physiological parameter" or has "one or more processors…configured to calculate" a physiological parameter. With respect to the preamble, Complainants' expert Dr. Madisetti offered nothing more than a conclusory statement that "as described … in this slide" the devices themselves "confirm that it's a user-worn device that can be configured to non-invasively measure a physiological parameter." Tr. [Madisetti] 710:23-711:10. But CDX-0011C.0048. With respect to limitation [1F], Dr. Madisetti's testimony was similarly conclusory and insufficient—

Tr. [Madisetti] 715:20-716:21.[15]

Neither Dr. Madisetti nor Complainants introduced into evidence ***any*** source code showing how any of the Poeze DI Articles satisfy these limitations. Dr. Madisetti made only passing reference to "source code review" as among the materials he considered. Tr. [Madisetti] 708:15-710:6. However, as Apple's experts Professors Sarrafzadeh and Warren explained, Tr. [Sarrafzadeh] 1124:24-1125:11; 1126:22-1127:7; Tr. [Warren] 1257:20-1258:8 RX-1397C.[16] The only details Tr. [Madisetti] 804:14-25.[17] But as Professor Sarrafzadeh explained,

[15] Dr. Madisetti did not offer any additional evidence on the comparable limitations in the asserted claims of the '502 and '648 patents, but only incorporated by reference his analysis for '501 patent limitation [1F]. Tr. [Madisetti] 720:14-20; 724:21-725:18; CDX-0011C.0058, CDX-0011C.0064-65.

[16] As noted in footnote 4, Apple intends to file a motion to reopen the evidentiary record to admit RX-1397C.

[17] Dr. Madisetti also acknowledged at the hearing that CPX-0157C (the "Masimo W1" allegedly provided to Dr. Madisetti) Tr. [Madisetti] 805:5-17. Dr. Madisetti did not offer any opinions

Tr. [Sarrafzadeh] 1124:24-1125:11, 1126:22-1127:7; RX-1397C

Dr. Madisetti also did not review

Tr. [Madisetti] 803:12-804:13. But Mr. Scruggs admitted he is

Tr. [Scruggs] 469:19-471:2.

Complainants' failure to provide any evidence beyond conclusory testimony regarding is fatal to its position. Although Dr. Madisetti claims to have reviewed demonstrations of the Poeze DI Articles, he admits to having not seen any of the Poeze DI Articles in person (other than the "W1") before forming his opinions in this matter; did not record any results of the demonstrations he viewed; and made no comparison of the outputs of those demonstrations to any reference device. Tr. [Madisetti] 800:2-801:5, 802:3-7, 802:14-22; Tr. [Sarrafzadeh] 1122:20-1123:3 (identifying attendees at the demonstrations for Apple counsel). The only evidence of any "demonstrations" of the Poeze DI Articles in the record were those observed by Apple's experts, which both Professors Sarrafzadeh and Warren confirmed are

Tr. [Warren] 1254:4-1256:25; Tr. [Sarrafzadeh] 1122:20-1126:20; RX-1470C.

As Professor Warren explained, he and Professor Sarrafzadeh

Tr. [Warren] 1254:11-24; *see also* Tr. [Scruggs] 445:2-12

As both Professors Warren and Sarrafzadeh confirmed,

. Tr. [Sarrafzadeh] 1123:16-19; Tr. [Warren] 1254:11-24

see also Tr. [Scruggs] 446:3-7

Tr. [Sarrafzadeh] 1123:4-1124:3

Tr. [Warren] 1254:11-24

Notwithstanding these limitations,

RDX-0007C.154 (citing RX-0259C – RX-0260C; RX-0262C – RX-0270C); *see also* RX-1470

Tr. [Warren] 1257:1-19;

RDX-0008C.0147 (citing RX-0265C – RX-0270C).

Tr. [Warren] 1254:25-1256:1; Tr. [Scruggs] 446:24-448:1

Tr. [Scruggs] 419:8-14; *see also* Tr. [Warren] 1255:6-11

Tr. [Warren] 1255:6-1256:1; Tr. [Scruggs] 449:13-450:9

RX-1470C. As Professor Warren explained he was

Tr. [Warren] 1255:6-1256:1. Professor Sarrafzadeh similarly observed that

and concluded Tr. [Sarrafzadeh] 1122:7-1124:23. Accordingly, based on the review of the Masimo Watch articles demonstrated by Mr. Scruggs,

Professors Warren and Sarrafzadeh determined

Tr. [Sarrafzadeh] 1122:7-1124:23; Tr. [Warren] 1254:8-1256:25; 1258:9-17

Professor Warren (and Professor Sarrafzadeh) similarly concluded that Complainants have not shown CPX-0146C, the "Masimo W1" article produced to Apple, satisfies the limitations requiring a device or processor configured to measure physiological parameters. Tr. [Sarrafzadeh] 1122:7-1124:23; Tr. [Warren] 1256:2-1257:19. Tr. [Sarrafzadeh] 1125:17-1126:1 RX-1470C The readings taken from CPX-0146C

RDX-0008.0149C (RX-0239C-RX-0246C; RX-0250C; RX-0260C; RX-0271C-RX-0276C); Tr. [Warren] 1256:2-1257:19; Tr. [Sarrafzadeh] 1125:17-1126:20; RX-1470C.

Tr. [Warren] 1256:2-25.

Tr. [Sarrafzadeh] 1126:3-20.

Complainants'

(3) No evidence articles have "at least three photodiodes arranged on an interior surface…" [1B]; or "opaque lateral surfaces configured to avoid light piping" [1E]

Complainants have also failed to demonstrate that any of the Poeze DI Articles have three photodiodes or opaque lateral surfaces configured to avoid light piping. Dr. Madisetti relied on Complainants' technical documentation, including photos of the devices and CAD drawings and "technical drawings" as evidence that these limitations were satisfied. *E.g.*, Tr. [Madisetti] 708:15-709:3; CDX-0011C.0047 (summarizing materials Dr. Madisetti alleges he relied on). But Complainants failed to show that the materials relied on by Dr. Madisetti, including the CAD files, accurately and completely describe the articles. To the contrary, the evidence shows that they do not. In fact, Mr. Scruggs has testified RX-1209C [Scruggs Jan. 6 Dep. Tr.] 67:19-23 and 89:9-12 ; *id. at* ; *id*. at 125:4-12 *id.* at 159:3-12

[redacted] *see also* Tr. [Muhsin] 380:16-382:8 [redacted]; *see also* Tr. [Scruggs] 465:22-467:18 [redacted] Tr. [Scruggs] 466:21-467:18; 477:13-478:3; RX-1209C [Scruggs Jan. 6 Dep. Tr.] 91:18-92:24 [redacted] *id.* at 107:2-24 [redacted] *id.* at 143:1-23 [redacted] *see also* RX-1209C [Scruggs Jan. 6 Dep.] 93:2-9 [redacted]

As Professor Warren testified, he was unable to confirm from a visual inspection that the Poeze DI Articles practice these limitations. Tr. [Warren] 1259:12-23; RX-0249C; RX-0252C.[18] Given this, and the lack of any evidence to establish that the documents Dr. Madisetti relied on

[18] [redacted]. *See e.g.*, Tr. [Sarrafzadeh] 1123:24-1124:3 [redacted]

[redacted]

accurately describe the actual Poeze DI Articles, Complainants did not carry their burden to demonstrate that these claim limitations are practiced by each Poeze DI Article.

b. The "Masimo Watch" Articles Do Not Practice '502 Claim 28

(1) CPX-0052C and CPX-0058C are not "a user worn device" [28 preamble] and lack "a strap configured to position the user-worn device on the user" [28M]

Complainants failed to establish that CPX-0052C and CPX-0058C practice Claim 28 of the '502 Patent because they are not "user-worn device[s]" as required by [28 preamble] and lack a strap as required by limitation [28M], including for all the reasons discussed above in Section IV.C.2.a.(1), *supra*; *see also* Tr. [Warren] 1259:1-8 [redacted]

(2) Articles Are Not "Configured to Non-Invasively Measure An Oxygen Saturation Of a User" [28 preamble] and Lack "One Or More Processors Configured To … Calculate An Oxygen Saturation Measurement Of The User" [28I]

Complainants failed to establish that the Poeze DI Articles are "configured to non-invasively measure an oxygen saturation of a user" and do not contain processors "configured to … calculate oxygen saturation measurement" as required by [28 preamble] and limitation [28I] for all the reasons discussed above in Section IV.C.2.a.(2), *supra*, with respect to claim 1 of the '501 patent.

(3) No evidence articles have "a first set of light emitting diodes (LEDs), the first set of LEDs comprising at least an LED configured to emit light at a first wavelength and an LED configured to emit light at a second wavelength" [28A]; "a second set of LEDs spaced apart from the first set of LEDs, the second set of LEDs comprising at least an LED configured to emit light at the first wavelength and an LED configured to emit light at the second wavelength" [28B] "four photodiodes arranged in a quadrant configuration…" [28C]; a

"thermistor…" [28D]; "a storage device configured to at least temporarily store at least the measurement" [28L]

Complainants failed to establish that the Poeze DI Articles practice claim 28 of the '502 patent. For limitations [28A] and [28B], Dr. Madisetti relies solely on the same evidence he cites for limitation [1A] of the '501 patent, while for limitation [28D], he relies on the same evidence he cited for '501 patent limitation [1B]. Tr. [Madisetti] 719:16-720:5; CDX-0011C.0049-50; CDX-0011C.0056-58. But he did not explain, for example, Tr. [Madisetti] 711:14-712:4. For limitation [28D], he principally relies on CAD files and technical documentation, and provides only conclusory testimony that the devices "have thermistors configured to provide a temperature signal." Tr. [Madisetti] 720:21-721:5; CDX-0011C.0059. Finally, for limitation [28L], he relies solely on As a result, Complainants failed to show these devices practice claim 28 of the '502 patent, including for all the reasons discussed above in Section IV.C.2.a.(3), *supra.*

c. "Masimo Watch" Articles Do Not Practice '648 Claims 12, 20, or 30

(1) CPX-0052C and CPX-0058C are not "user-worn device[s]" [8 preamble] & [20 preamble] and lack "a strap configured to position the housing proximate tissue of the user when the device is worn" [8I]

Complainants failed to establish that CPX-0052C and CPX-0058C practice Claim 12, 24 or 30 of the '648 Patent because they are not "user-worn device[s]" as required by [8 preamble]

[redacted]

and [20 preamble] [redacted] including for all the reasons discussed above in Sections IV.C.2.a.(1) and IV.C..b.(1), *supra.*

(2) Articles are not "configured to non-invasively determine measurements of a physiological parameter of a user" [8 preamble] & [20 preamble] and do not have "processors configured to" "output measurements of a physiological parameter" [8G] or "determine measurements of oxygen saturation" [20E]

Complainants failed to establish that the Poeze DI Articles are "configured to non-invasively determine measurements of a physiological parameter of a user" as required by [8 preamble] and [20 preamble] or "processors configured to … output measurements of a physiological parameter" [8G] or "processors configured to … determine measurements of oxygen saturation" [20E] for all the reasons discussed above in Section IV.C.2.a.(2), *supra* with respect to claim 1 of the '501 Patent.

(3) No evidence articles have "a first set of light emitting diodes (LEDs)…" [8A]; "second set of LEDs spaced apart from the first set of LEDs…" [8B]; "four photodiodes" [8C]; or "at least four photodiodes…being arranged to capture light at different quadrants of tissue of a user" [20B]

Complainants failed to establish that the Poeze DI Articles practice Claim 12, 24 or 30 of the '648 Patent because multiple aspects of the articles could not be confirmed by a visual inspection, including for all the reasons discussed above in Sections IV.C.2.a.(3) and Section IV.C.2.b.(3), *supra.*

D. Invalidity

In an attempt to draft claims that would capture the Series 6 while claiming priority to earlier applications, Masimo was forced to claim combinations of generic, well-known components that have been used in light-based physiological monitoring devices for decades. As

[redacted]

discussed below the asserted claims are invalid. A POSITA would have found it obvious to use the claimed components in any number of arrangements including those claimed, and in fact Dr. Rowe and his colleagues at Lumidigm had already done exactly that. Further, while a POSITA would have found it obvious to use the claimed combinations, nothing in the specification of the Poeze Patents suggests Complainants themselves had in fact done so, rendering the Poeze Patents invalid under §112.

1. Anticipation / Obviousness

a. State of the Art

(1) Known Components for Light-Based Sensors Before 2008

Researchers have been using light-based sensors to measure physiological parameters "for at least eighty years," and work in the field dates as far back as the "late 1800's." Tr. [Warren] 1189:8-20. For example, Matthes published an article in 1938 related to "light-based transmission through the finger and the toe":

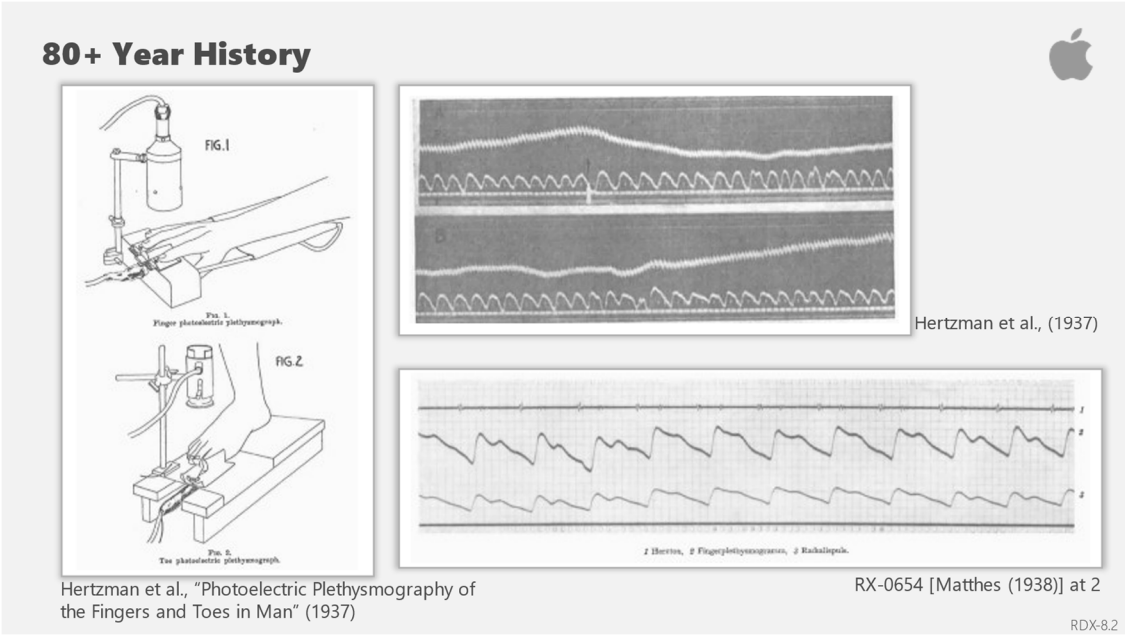

[redacted]

Id. 1189:19-20; RDX-8.2 (summarizing Tr. [Warren] 1189:8-25, RX-0654 [Matthes] and other prior art from the 1930s).

Prior to 2008, it was known that optical sensors could include ***three or more LEDs***. Professor Warren confirmed that this concept goes back "50 years" and provided multiple examples including Smart (13 LEDs), McCarthy (8 LEDs), Haar (20 LEDs), Scharf (8 LEDs), and Lumidigm (LEDs in "all kinds of configurations"):

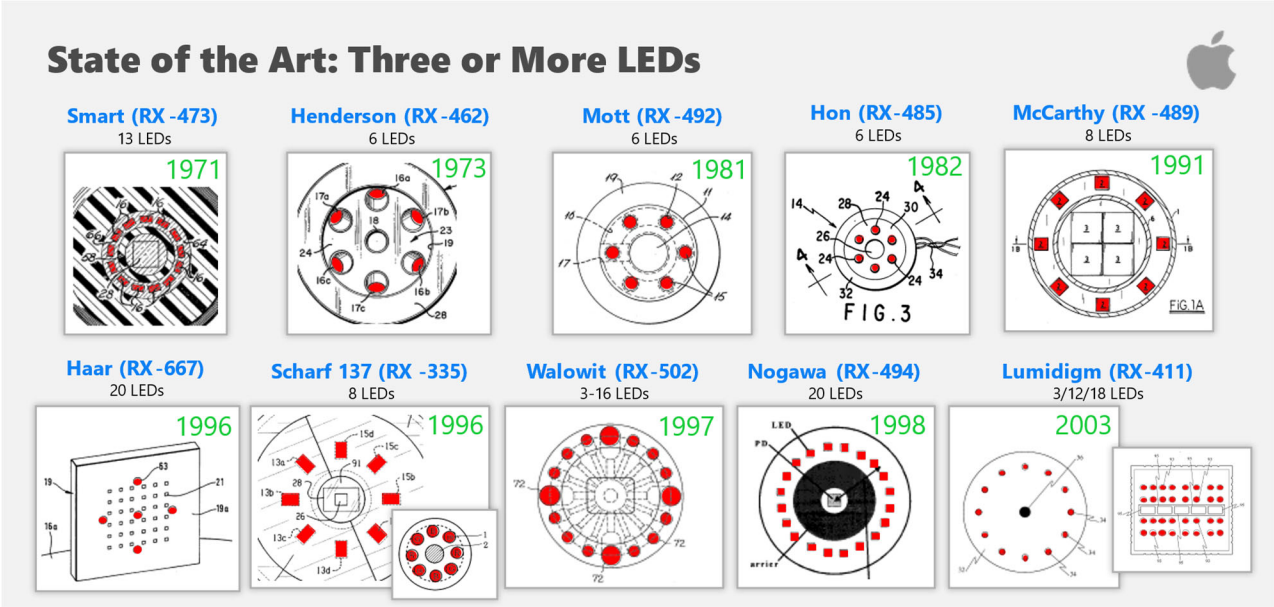

Tr. [Warren] 1190:5-24; RDX-8.5 (summarizing Tr. [Warren] 1190:5-24, RX-0335 [Scharf 137], RX-0411 [Lumidigm], RX-0456 [Gratton], RX-0473 [Smart], RX-0478 [Avni], RX-0489 [McCarthy], RX-0495 [Orr], RX-0502 [Walowit], RX-0665 [Nippon], RX-0667 [Haar], RX-1221 [Imai]); *see also* incorporated exhibits.

Prior to 2008, it also was known that optical sensors could include three or more ***sets*** of LEDs. Tr. [Warren] 1191:7-12. A "set of LEDs" is a grouping of multiple LEDs that can be arranged "in different locations but assigned to one another as a group" or exist in "a co-located

[redacted]

set." *Id.* 1190:25-6. Professor Warren provided multiple examples including McCarthy, Haar, Walowit, and Gratton:

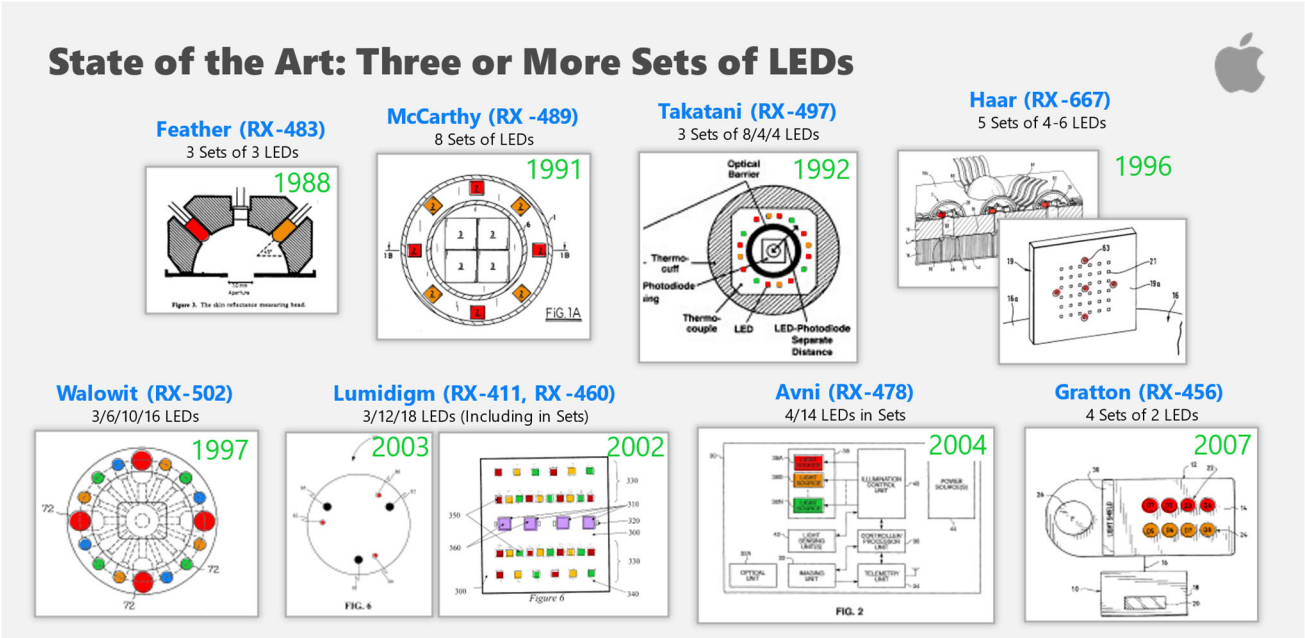

Id. 1191:10-22; RDX-8.6 (summarizing Tr. [Warren] 1190:25-1191:22, RX-0335 [Scharf 137], RX-0411 [Lumidigm], RX-0456 [Gratton], RX-0478 [Avni], RX-0489 [McCarthy], RX-0667 [Haar]); *see also* incorporated exhibits.

Prior to 2008, it also was known that optical sensors could include ***four or more photodiodes***, including in quadrants. Professor Warren explained that examples go back to at least 1978 (Orr and Cramer), and include as many as 36 photodiodes (Haar) and both "circular" and "rectilinear" quadrants (McCarthy, Konig, Lumidigm, Avni, and Kansas State):

[redacted]

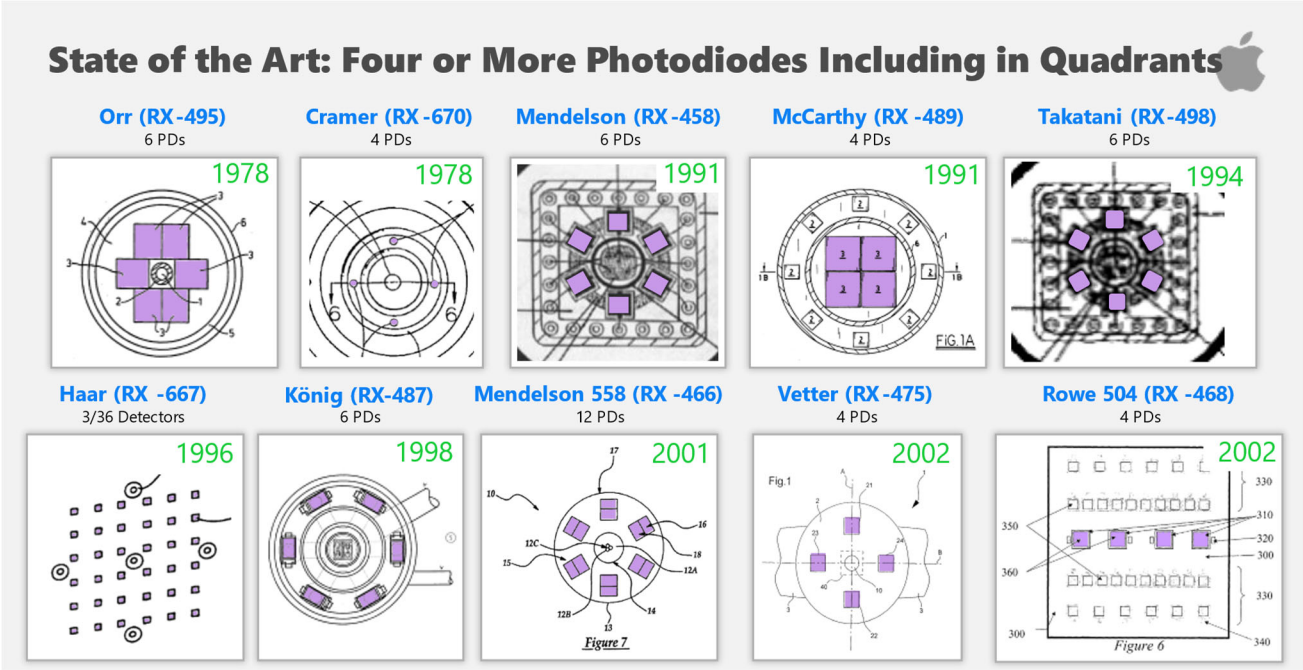

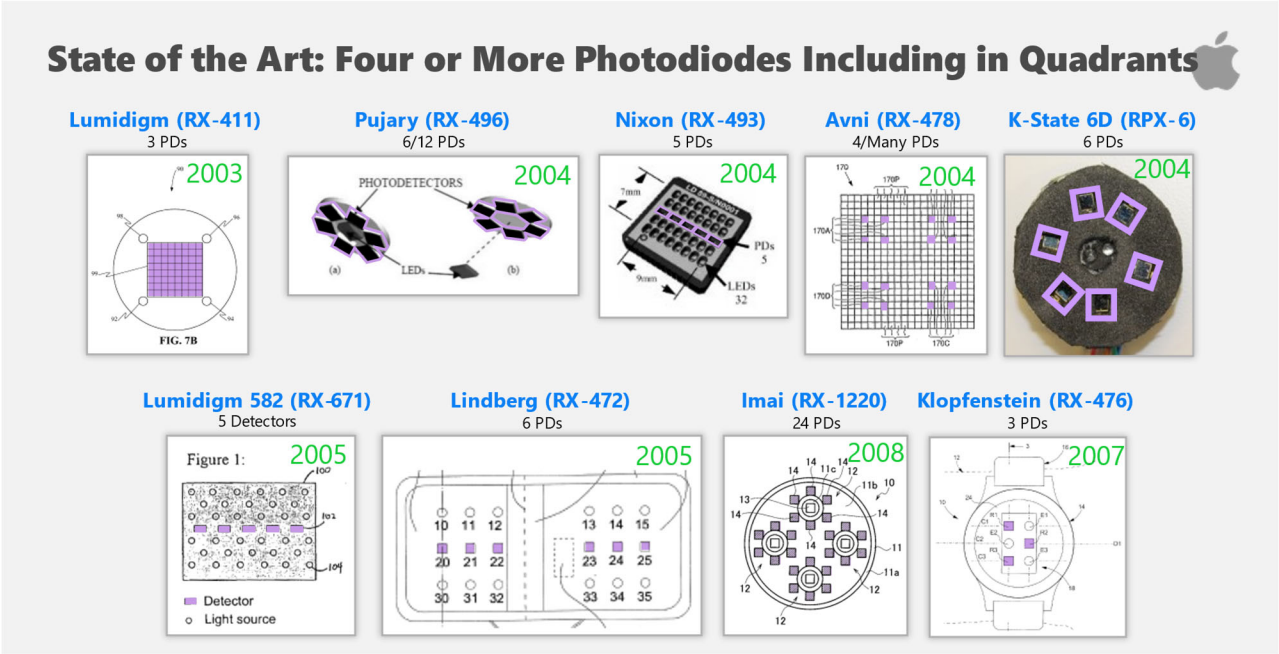

Tr. [Warren] 1191:23-1192:6; RDX-8.7 and 8.8 (summarizing Tr. [Warren] 1191:24-1192:22, RX-0411 [Lumidigm], RX-0478 [Avni], RX-0487 [Konig], RX-0489 [McCarthy 1991], RX-0495 [Orr], RX-0504 [Kansas State 2], RX-0667 [Haar], RX-0668 [Mendelson 799], RX-0670 [Cramer], RX-1221 [Imai]); *see also* incorporated exhibits.

[redacted]

Prior to 2008, it also was known that optical sensors could include ***openings*** over the photodiodes with ***opaque surfaces***. Professor Warren explained that the use of openings over photodiodes, with opaque surfaces, has been known for the past 40 years. Tr. [Warren] 1192:25-1193:5; 1195:16-19. A POSITA would have known that openings would "allow light to get to a detector," and that they are critical because "[a] detector can't detect light without some sort of opening above it." *Id.* 1193:3-6. A POSITA also would have known that the openings should have opaque surfaces to "perform optical blocking" and to help "avoid light piping." *Id.* 1212:13-1213:3.

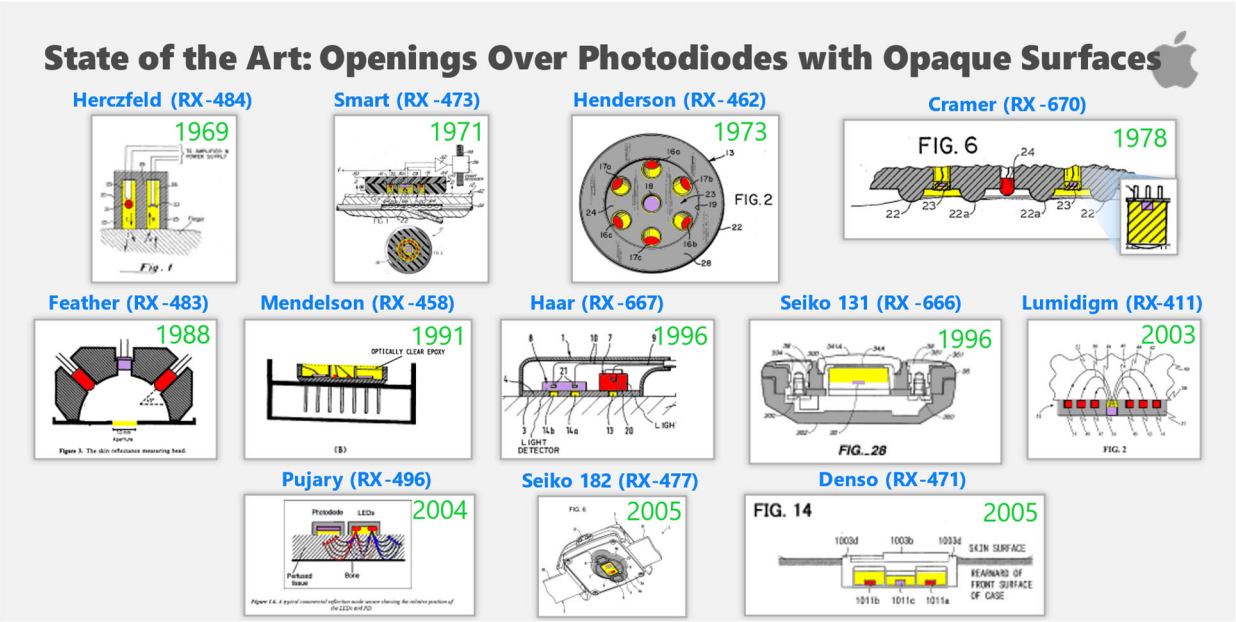

RDX-8.9 (summarizing Tr. [Warren] 1192:23-1193:22, RX-0473 [Smart], RX-0670 (Cramer), RX-0665 [Nippon], RX-0489 [McCarthy 1991], RX-0035 [Webster], RX-0335 [Scharf 137], RX-0666 [Seiko 131], RX-0502 [Walowit], RX-0667 [Haar], RX-0478 [Avni], RX-0504 [Kansas State 2], RX-0411 [Lumidigm]); *see also* incorporated exhibits.

Professor Warren also provided multiple examples of devices that combined these concepts of ***multiple LEDs***, ***multiple photodiodes***, and ***openings*** over the photodiodes with

[redacted]

opaque surfaces, prior to 2008. As he explained: "None of these tools existed in isolation. A designer would have used a collection of a grouping or permutation in their work." Tr. [Warren] 1193:7-14. Professor Warren pointed to Smart as a good an example because "it incorporates the LEDs, the photodiodes, the opaque material, the interior surface, the opaque surfaces, and the openings all in one bundle, 50 years old." Tr. 1193:15-23; RX-0473 (Smart). Other examples include Haar, McCarthy, Lumidigm, and Imai:

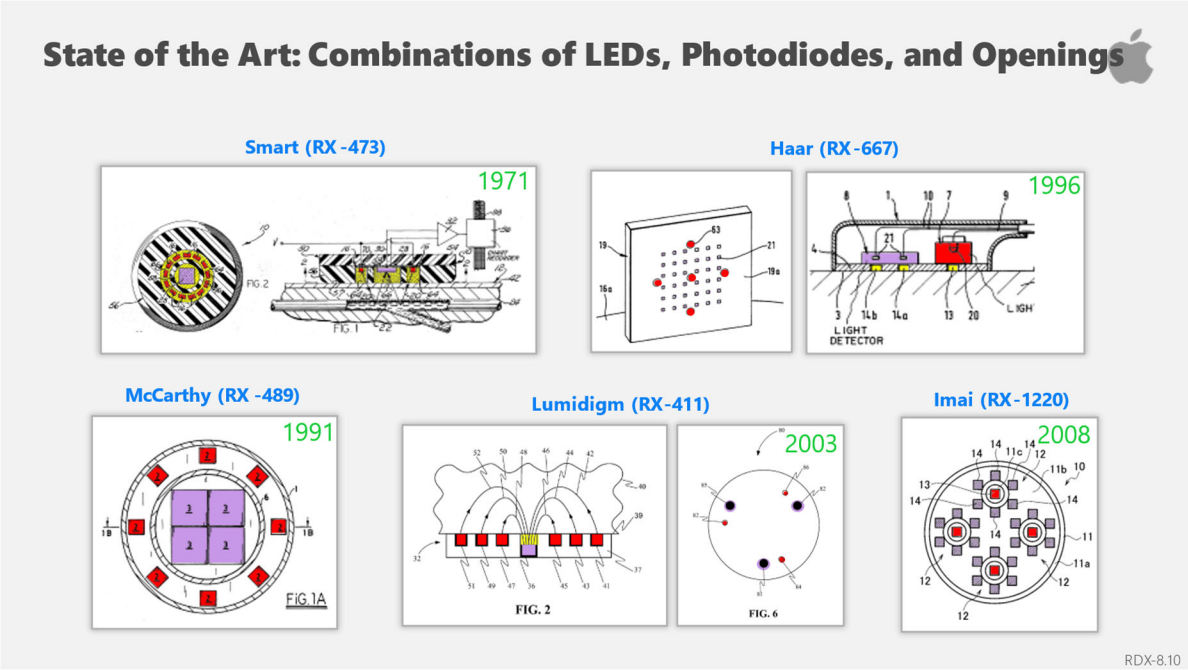

Id. 1193:15-22; RDX-8.10 (summarizing Tr. [Warren] 1193:7-18, RX-0411 [Lumidigm], RX-0489 [McCarthy], RX-0667 [Haar], RX-1220 [Imai] as other examples); *see also* incorporated exhibits.

Prior to 2008, it also was known that optical sensors could include ***windows*** or ***transmissive coverings*** over the photodiodes. Professor Warren explained that this concept goes back more than 40 years, and that windows are similar to openings (i.e., they allow light to reach a detector) but are comprised of "a physical piece of material" to "physically protect the detector from dust[,] debris[,] dirt, [or] liquid":

[redacted]

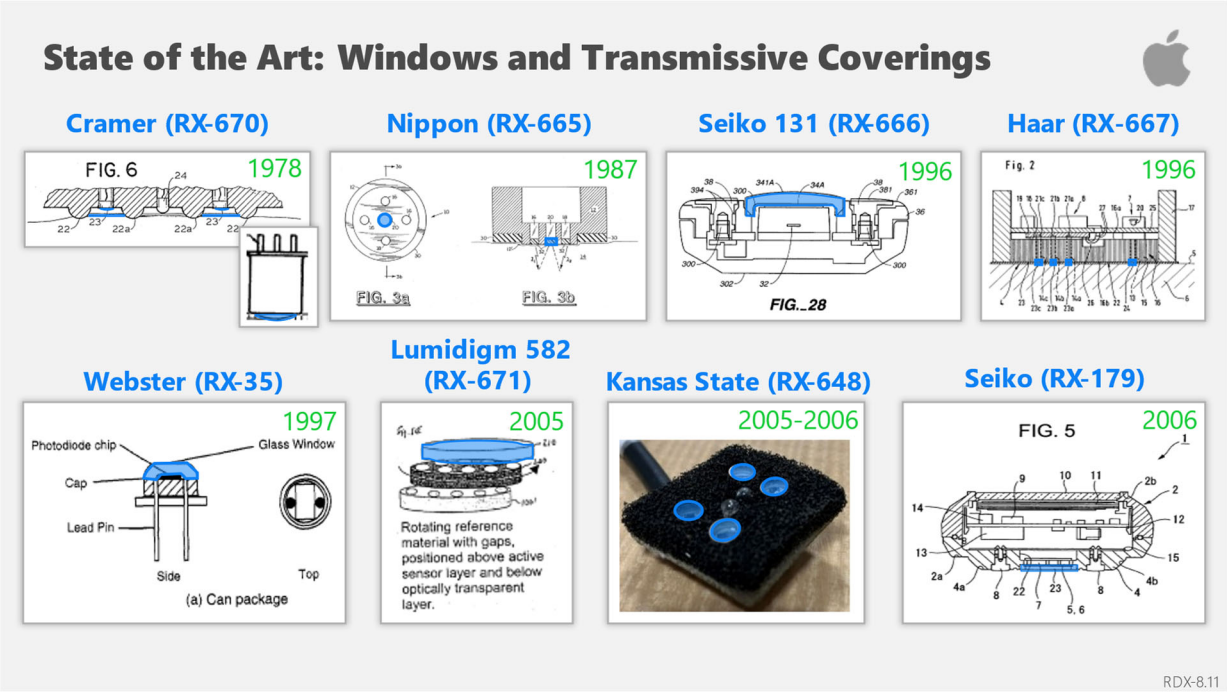

Tr. [Warren] 1193:24-7; RDX-8.11 (summarizing Tr. [Warren] 1193:23-1194:14, RX-0035 [Webster], RX-0411 [Lumidigm], RX-0665 [Nippon], RX-0666 [Seiko 131], RX-0667 [Haar], RX-0670 [Cramer], RX-0508; *see also* incorporated exhibits.

Finally, prior to 2008, it also was known that optical sensors could include ***protrusions***, including convex protrusions. Professor Warren explained that protrusions in a variety of shapes (including convex surfaces) have been used, since at least the early 1970s, to "push residual blood out of the way," and improve "tissue perfusion." Tr. [Warren] 1194:17-24. Smart and Cramer both used this idea in the 1970s, and Seiko 131 "not only implemented" a protrusion, but also "explained [] why the technique was important and why it worked":

[redacted]

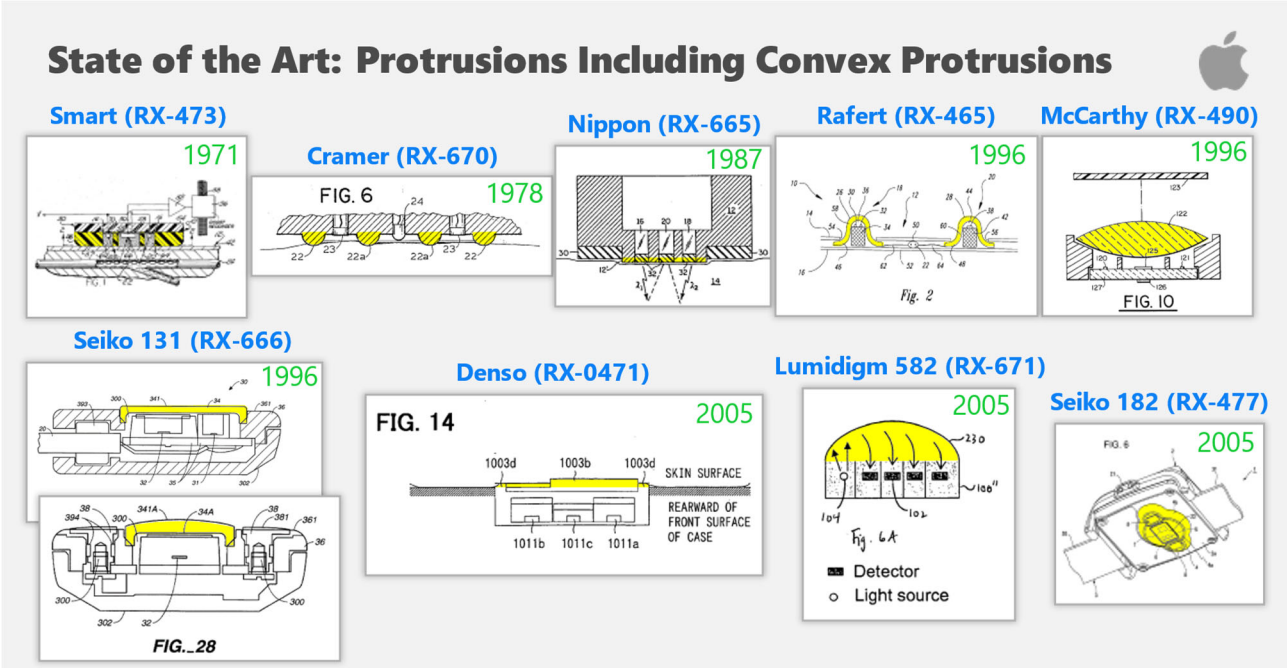

Id. 1195:3-5; RDX-8.12 (summarizing Tr. [Warren] 1194:12-1195:5, RX-0473 [Smart], RX-0665 [Nippon], RX-0666 [Seiko 131], RX-0670 [Cramer]); *see also* incorporated exhibits.

(2) Kansas State Devices Built Before 2008

Professor Warren's own experience at Kansas State ("K-State") confirms that the basic ideas underlying the Poeze Patents were well-known long before their July 2008 priority date. Professor Warren has been building pulse oximeters with his undergraduate students since 2000, eight years before the priority date of the Poeze Patents. Tr. [Warren] 1185:16-23, 1195:25-1196:3. Professor Warren provided photographs of some of these sensors taken in 2002, including a sensor used to take measurements on a wrist:

[redacted]

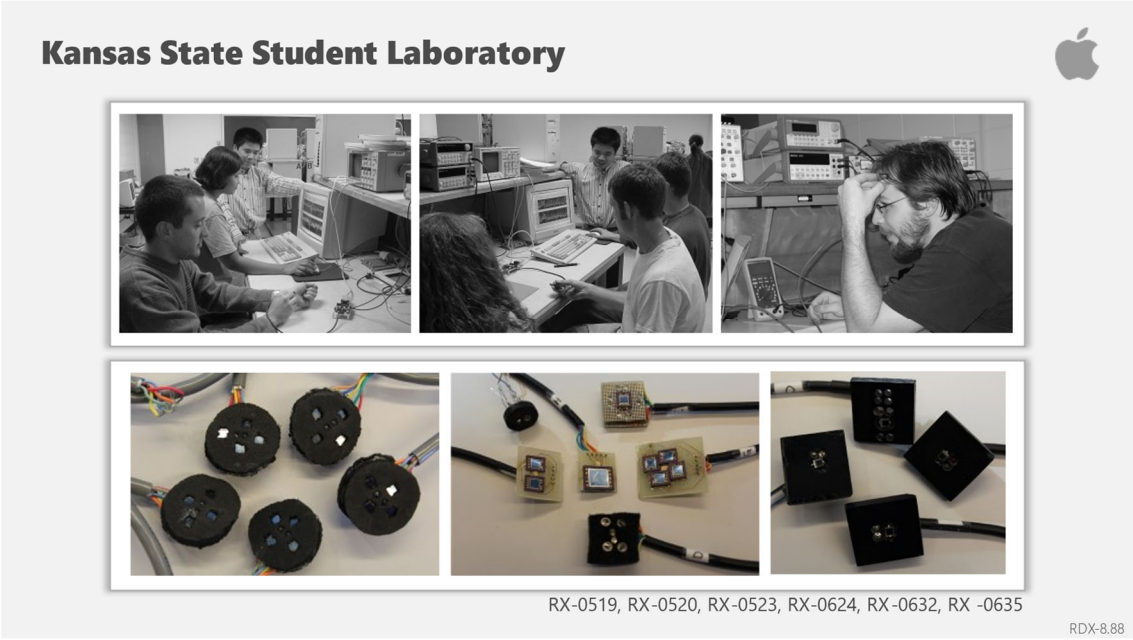

Id. 1185:24-1186:16, 11:95:24-11:96:16; RDX-8.88 (summarizing Tr. [Warren] 1195:23-1196:16, RX-0519, RX-0520, RX-0523, RX-0624, RX-0632, RX-0635); *see also* incorporated exhibits.

For example, Professor Warren's student, Austin Wareing, created the sensor shown below in summer 2004:

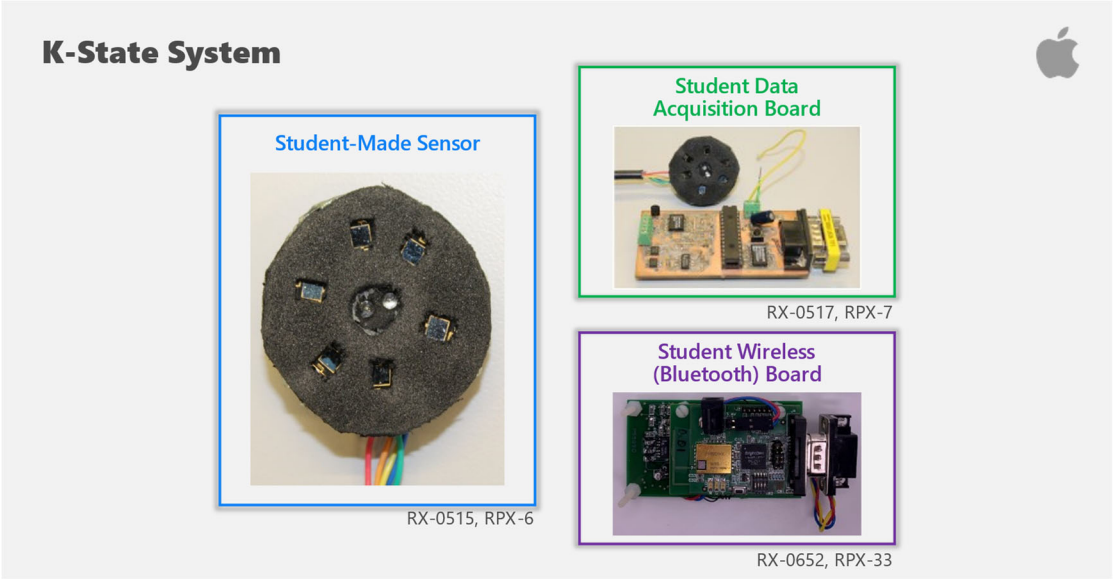

[redacted]

RDX-8.89 (summarizing Tr. [Warren] 1196:17-1198:14, RPX-33, RPX-006, RPX-0007, RX-0504, RX-0508, RX-0515, RX-0517, RX-0652); *see also* incorporated exhibits. This sensor "incorporated six photodiodes" that were "embedded on an [opaque] interior foam surface." Tr. [Warren] 1197:7-12. "[B]lack foam" was used to ensure that "the sensor head could conform to the tissue" and to "prevent light piping." *Id.* 1220:9-15; *see, e.g.*, RX-0504 [Kansas State 2]. Holes were cut into the foam to create openings over the photodiodes. Tr. [Warren] 1197:16-20. The sensor was paired with a "data acquisition board" including a processor, and with a Bluetooth board to provide wireless communications. Tr. [Warren] 1197:21-1198:6; RX-0517; RDX-8.89 (summarizing RPX-6, RPX-7, RPX-33).[19] Notably, Mr. Wareing was not a POSITA when he created the sensor because he had not completed his undergraduate degree. Tr. [Warren] 1197:16.

Other students built similar pulse oximeters including with three LEDs (RX-0510), four sets of LEDs each with two LEDs (RX-0508), and transmissive windows over four photodiodes:

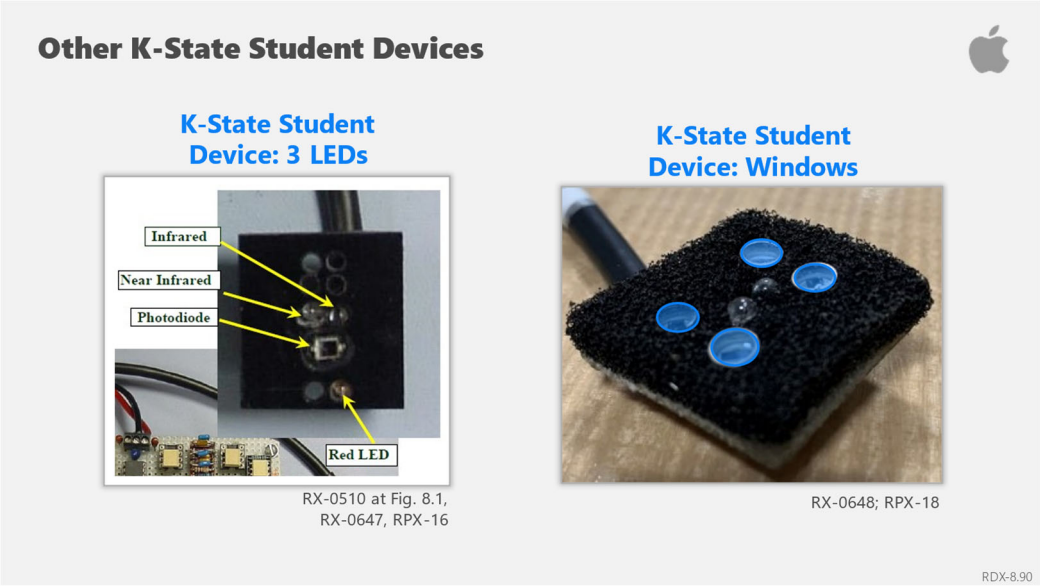

[19] Professor Warren also testified about two articles corroborating the features of Mr. Wareing's sensor, RX-0504 and RX-0508. Tr. [Warren] 1199:19-1200:15.

[redacted]

Id. 1198:17-1999:6; RDX-8.90 (summarizing Tr. [Warren] 1198:16-1200:15, RX-0510, RX-0648); *see also* incorporated exhibits.

b. Anticipation Under 35 U.S.C. § 102(a) / Single-Reference Obviousness Under 35 U.S.C. § 103(a) Based on Lumidigm

As discussed below and confirmed at trial by Professor Warren, Lumidigm anticipates all asserted claims of the Poeze Patents, and at a minimum, renders all asserted claims obvious. Tr. [Warren] 1207:1-12.[20]

(1) Lumidigm

U.S. Patent No. 7,620,212, titled "Electro-Optical Sensor" and originally assigned to Lumidigm, has an August 13, 2002 priority date and is prior art to the Poeze Patents under 35 U.S.C. § 102. RX-0411 ("Lumidigm"). The lead inventor, Dr. Robert Rowe, previously worked for Rio Grande Medical Technologies on light-based sensors that measured glucose and other blood analytes. Tr. [Rowe] 1142:10-17, 1143:12-1144:8, 1146:18-1147:9. Lumidigm formed as a spinoff to develop products that would use the same light-based sensors for biometrics. *Id.* at 1142:18-1143:1, 1144:15-1145:3.

Lumidigm's specification provides "a collation of what was known about [at] the time of optical sensor heads that were used for reflectance mode for spectrometry purposes." Tr. [Warren] 1204:8-17. Lumidigm's purported novelty focuses on detecting the liveness of tissue, but

[20] Complainants' expert Dr. Madisetti disagrees that the asserted Poeze Patent claims are invalid. *See* Tr. [Madisetti] at 1385:25-1387:25. Apple requests that the ALJ take judicial notice of the Final Written Decisions and corresponding declarations from Dr. Madisetti (attached hereto as Exs. 1-16). *See Certain Infotainment Sys., Components Thereof, & Automobiles Containing the Same,* Inv. No. 337-TA-1119, 2019 WL 4744857, at *1 (Sept. 23, 2019) ("Judicial notice is appropriate for USPTO decisions related to an asserted patent."); *Certain Movable Barrier Operator Sys. & Components Thereof*, Inv. No. 337-TA-1118, 2019 WL 1773475 at *1 (Apr. 16, 2019) (same).

[redacted]

Lumidigm repeatedly teaches that the same light-based sensors could be used to measure traditional parameters such as glucose, hemoglobin, and blood oxygenation. RX-0411 at 4:25-29, 10:11-21, 19:16-28; Tr. [Warren] 1204:8-17, 1205:1-11, 1215:18-1216:9; Tr. [Rowe] 1147:10-1148:4.

Lumidigm explains that its sensor can include any number and arrangement of ***light sources***, including LEDs, in any of a variety of wavelengths. RX-0411 at 6:38-53, 8:33-9:11, 9:26-34. Lumidigm further confirms that the sensor can include any number and any arrangement of ***detectors***, including "a single element, a plurality of discrete elements, or a one-or-two dimensional array of elements." *Id.* at 6:54-63, 9:39-45, 9:52-57. Lumidigm illustrates examples of such arrangements in Figures 3 through 7B, noting that "other numbers and arrangements" of sources and detectors "may alternatively be used" and that "[m]any variants exist:

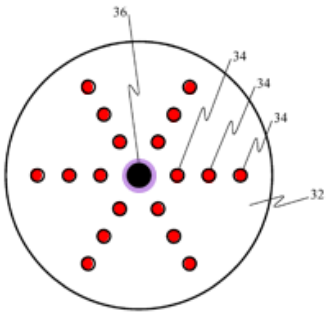

FIG. 3

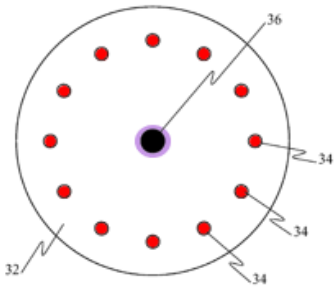

FIG. 4

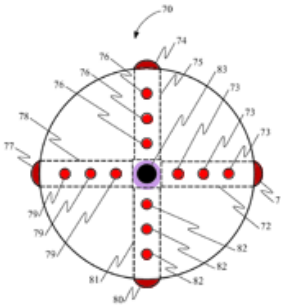

FIG. 5

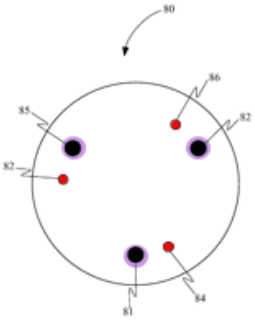

FIG. 6

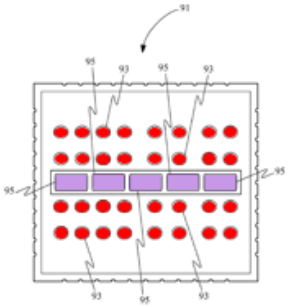

FIG. 7A

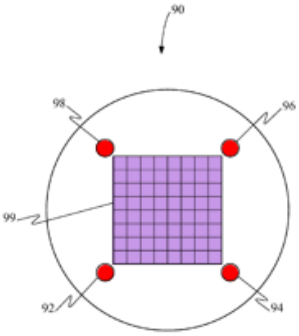

FIG. 7B

[redacted]

RX-0411 at Fig. 3-7B, 9:30-45; Tr. [Warren] 1204:18-12:05:11; Tr. [Rowe] 1148:5-19.[21]

Lumidigm explicitly confirms that the head of its sensor (i.e., the part in contact with the user's tissue) can have a "***compound curvature on the optical surface*** to match the profile of a device in which it is mounted, to incorporate ergonomic features that allow for good optical coupling with the tissue being measured, or for other technical or stylistic reasons." RX-0411 at 7:58-63.

Lumidigm also discloses that the sensor can be incorporated into a "portable electronic device" and provides as exemplary devices: key fobs, cell phones, personal digital assistants, and user-worn watches.

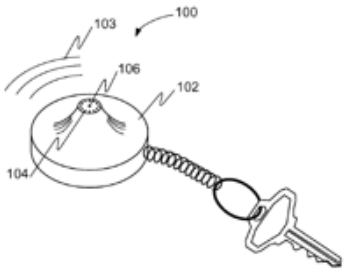

FIG. 8A

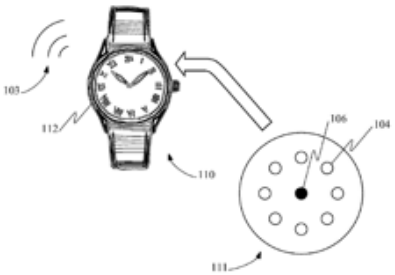

FIG. 8B

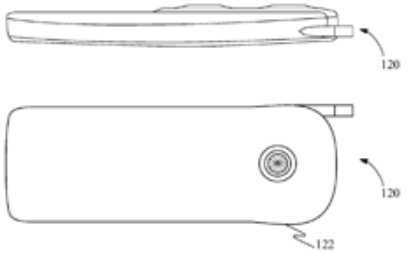

FIG. 8C

RX-0411 at Fig. 8A-C, 3:35-37. Lumidigm further explains that its wristwatch embodiment can include "***any*** of the sensor geometries previously disclosed or other equivalent configurations." *Id.* at 11:60-12:2; Tr. [Warren] 1205:12-1206:7; Tr. [Rowe] 1152:4-25.

Lumidigm's wristwatch and other portable devices also include a number of other standard components, including internal processors and memory for calculating and storing measurements (*e.g.*, RX-0411 at Fig. 9, 12:56-13:14) and interfaces for wireless communications (*e.g.*, *id.* at Figs. 8D-8E, 13:9-12).

[21] Apple has added color to Lumidigm's figures throughout this brief, to highlight the relevant components.

[redacted]

(2) '501 Patent, Claim 12

Lumidigm discloses all limitations of '501 claim 12 and anticipates this claim or, at a minimum, renders it obvious. Tr. [Warren] 1207:1-1215:10.

(a) '501 Patent, Claim 1

Limitation [1Preamble]: Lumidigm discloses "***[a] user-worn device configured to non-invasively measure a physiological parameter of a user, the user-worn device comprising***."

Lumidigm discloses that its sensor can be incorporated into a variety of devices including a user-worn wristwatch, as shown in Figure 8B:

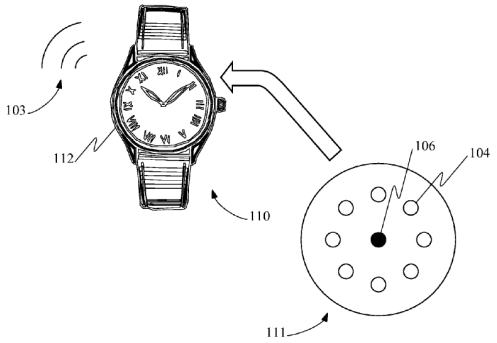

FIG. 8B

RX-0411 at 11:60-12:2, Fig. 8B; Tr. [Warren] 1207:23-1208:13; RDX-8.23 (summarizing RX-0411).

Lumidigm explains that, in this embodiment, the "biometric reader 11 is built into the case of a wristwatch 112 and operates based upon signals detected from the skin on the area of the wrist." RX-0411 at 11:61-64. Lumidigm's sensor uses those signals to measure physiological parameters, based on the "concentration of a substance in the individual's tissue," including "oxygenation and/or hemoglobin levels in the blood." *Id*. at 19:16-28, *see also* 11:61-64; Tr. [Warren] 1208:1-13, 1214:12-1215:4.

Lumidigm introduces its wristwatch embodiment after discussing numerous illustrative arrangements for the sensor's light sources, detectors, and sensor head, and confirms that "any of

the sensor geometries previously disclosed or other equivalent configurations" can be used in the wristwatch embodiment. RX-0411 at 11:60-12:2. A POSITA[22] would have understood that this would include any of the disclosed arrangements of LEDs and photodiodes, any of the disclosed geometries for the sensor head including a "compound curvature," and any equivalent configurations. Tr. [Warren] 1204:18-1206:7, 1208:1-13, 1214:12-1215:4.

Limitation [1A]: Lumidigm discloses "***at least three light emitting diodes (LEDs)***."

The concept of using multiple LEDs in a sensor has been "known for many decades." Tr. [Warren] 1208:14-23, *see also* 1189:25-1191:22, 1195:6-12. Lumidigm teaches that its sensor can include any type of light sources, including LEDs, in any variety of wavelengths. RX-0411 at 6:38-53. For example, each light source in a sensor can comprise "sets of LEDs, laser diodes VCSELs, or other solid-state optoelectronic device," and the light sources can have the same wavelength characteristics, differing wavelength characteristics, or some sources with the same wavelengths and others with different wavelengths. *Id*. at 6:43-53; Tr. [Warren] 1208:14-23. Lumidigm also discloses that the sensor can include any number of light sources, in any arrangement.

Lumidigm includes a series of illustrative examples in Figures 2 through 7B, including examples with three or more LEDs, and confirms that "other arrangements" also can be used. RX-0411 at 9:26-34, Figs. 2-7B. For example, Figure 6 teaches that the sensor can have ***three LEDs*** positioned relative to three photodiodes:

[22] Professor Warren confirmed that he applied the parties' agreed definition of a person of ordinary skill in the art in evaluating anticipation and obviousness. Tr. [Warren] 1207:1-22. All references to a "POSITA" in this brief, for purposes of the Poeze Patents, are from the perspective of a POSITA with this skill level, as of the priority date of the Poeze Patents.

[redacted]

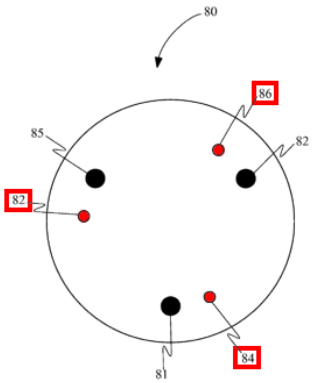

FIG. 6

RX-0411 at Fig. 6, 9:15-18, *see also* Figs. 3-5 and 7A-7B; Tr. [Warren] 1208:14-23; RDX-8.24 (summarizing RX-0411).

As referenced above, Lumidigm also discloses that any of the disclosed LED arrangements can be used in the wristwatch embodiment. RX-0411 at 11:60-12:2; Tr. [Warren] 1204:18-1206:7, 1208:1-13, 1214:12-1215:4.

Limitation [1B]: Lumidigm discloses "***at least three photodiodes***."

The concept of using three or more photodiodes in a sensor also was "quite well known," dating back more than 40 years. Tr. [Warren] 1208:25-1209:17, *see also* 1191:23-1192:22, 1195:13-15. Lumidigm discloses that its sensor's detectors "may comprise a single element, a plurality of discrete elements, or a one- or two-dimensional array of elements," in essentially any arrangement. RX-0411 at 6:54-56. Lumidigm further explains that the detectors can be made of various materials, including "InGaAs," and that "a suitable detector material is silicon." *Id.* at 6:56-63; *see also* Tr. [Warren] 1208:25-1209:17. A POSITA would have understood that a detector made of InGaAs or silicon would be a photodiode. *Id.* at 1209:14-17 ("no doubt" a POSITA would understand these as photodiodes).

[redacted]

Lumidigm provides several illustrative examples, including examples with "at least three photodiodes" and again confirms that "other numbers and arrangements" may "alternatively be used." *Id.* at 9:30-34. For example, Figure 6 shows an example with ***three photodiodes***:

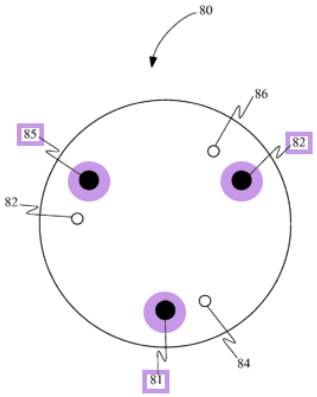

FIG. 6

RX-0411 at Fig. 6, *see also* Figs. 7A-7B; Tr. [Warren] 1208:25-1209:17; RDX-8.25 (summarizing RX-0411).

As referenced above, Lumidigm confirms that any of the disclosed photodiode arrangements can be used in its wristwatch embodiment. RX-0411 at 11:60-12:2; Tr. [Warren] 1204:18-1206:7, 1208:1-13, 1214:12-1215:4.

Lumidigm also discloses that the three photodiodes are "***arranged on an interior surface of the user-worn device***." For example, Figure 2, a cross-section of Figure 1, shows a detector placed on an interior surface of the device:

[redacted]

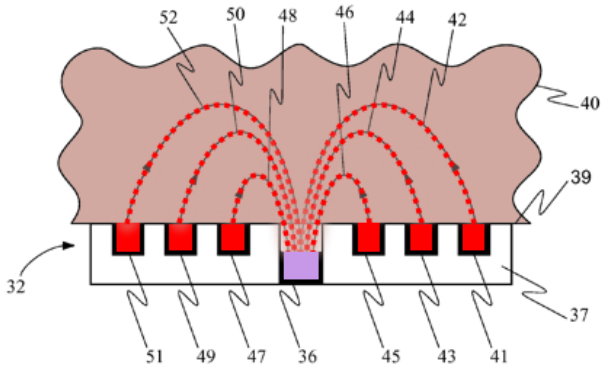

FIG. 2

RX-0411 at Fig. 2, 7:5-6, 8:1-4; Tr. [Warren] 1209:19-1210:11; RDX-8.26 (summarizing RX-0411). Although Figures 1 and 2 include only one detector, item 36, Lumidigm states that detector 36 is representative and "may comprise . . . a plurality of discrete elements." RX-0411 at 6:54-56, *see also* 3:9-11. A POSITA would have understood that, for the embodiments with multiple detectors, such as Figure 6, the additional detectors would be similarly arranged on the interior surface below the sensor head. Tr. [Warren] 1209:19-1210:11.

Lumidigm also discloses that the three photodiodes are "***configured to receive light attenuated by tissue of the user***." This was "another well-known principle," and is illustrated in Figure 2, showing the photodiodes receiving light that has been "reflect[ed] back" to the photodiodes after it has "propagated through the tissue." Tr. [Warren] 1209:19-1210:11. Lumidigm explains that the detectors are "disposed relative to the light sources to detect light that has propagated through tissue" and that the resulting signals "contain[ ] information about the tissue optical properties." RX-0411 at 3:25-28, 7:26-29, Fig. 2; Tr. [Warren] 1209:19-1210:11.

Limitation [1C]: Lumidigm discloses "a ***protrusion arranged over the interior surface, the protrusion comprising a convex surface.***"

The concept of using a protrusion with a convex surface was also a "well-known idea," dating back to the "early '70s." Tr. [Warren] 1210:13-1211:8, 1194:17-1195:5, 1195:20-22. As

[redacted]

referenced above, Figure 2 depicts a cross-sectional view of the sensor head, showing detectors recessed and placed on an interior surface below the sensor surface. RX-0411 at 7:5-6, 8:1-4. Although Figure 2 shows a flat sensor head, Lumidigm explains that "[t]he sensor head 32 may also have a ***compound curvature on the optical surface*** to match the profile of a device in which it is mounted, ***to incorporate ergonomic features that allow for good optical and mechanical coupling*** with the tissue being measured, or for other technical or stylistic reasons." *Id.* at 7:57-63, 8:27-28 ("Optionally, the surface of the light relay can be contoured to fit specific product applications and ergonomic requirements."); RDX-8.27 (summarizing same).

A POSITA would have understood that, when the sensor has a "compound curvature on the optical surface" (i.e., the surface directly in contact with the user's tissue), it has a protrusion, with a convex surface, arranged over the interior surface holding the detectors. Tr. [Warren] 1210:12-1211:8. Lumidigm expressly teaches the benefits of a "compound curvature," including for "good optical and mechanical coupling." RX-0411 at 7:57-63. A POSITA would have understood the benefits of including a convex protrusion, including to improve signal quality. Tr. [Warren] 1210:12-1211:8.

Limitation [1D]: Lumidigm discloses "a ***plurality of openings extending through the protrusion and positioned over the three photodiodes***."

The concept of including individual openings over each photodiode was another "quite well-known" idea, dating back to the "late 60s," to allow light to reach the detectors. Tr. [Warren] 1211:10-12:12-3, *see also* 1192:25-1193:6, 1195:16-19. Consistent with this concept, Lumidigm explains that its detectors are "recessed from the sensor surface 39 in optically opaque material" and shows an example of such an opening in Figure 2:

[redacted]

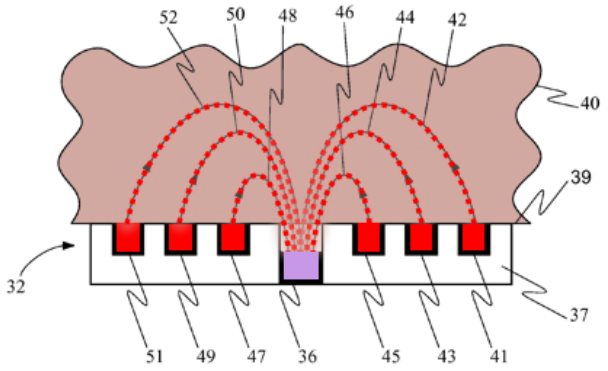

FIG. 2

Again, although Figures 1 and 2 include only one detector, item 36, Lumidigm expressly states that detector 36 is representative and "may comprise . . . a plurality of discrete elements." RX-0411 at 6:54-56, *see also* 3:9-11. A POSITA would have understood that the sensor can include a plurality of detectors, such as shown in Figure 6, and that for the embodiments with three or more photodiodes, the protrusion would include an opening positioned over each photodiode:

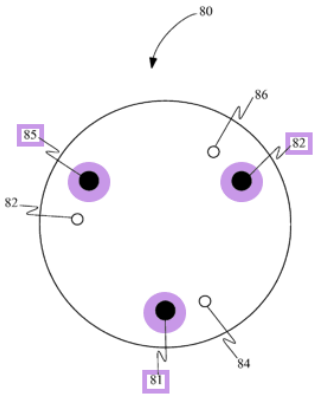

FIG. 6

RX-0411 at Fig. 6, 6:54-56, 3:9-11; Tr. [Warren] 1211:9-1212:10.; RDX-8.28 (summarizing RX-0411).

Limitation [1E]: Lumidigm discloses "***the openings each comprising an opaque lateral surface the plurality of openings configured to allow light to reach the photodiodes, the opaque lateral surface configured to avoid light piping through the protrusion***."

[redacted]

The concept of using opaque materials for openings over photodiodes was another "well-known idea," and also dated back to the "late '60s." Tr. [Warren] 1211:10-1212:3, *see also* 1192:25-1193:6, 1195:16-19. As Professor Warren explained, "if you recess the photodiodes or detectors from the sensor surface in optically opaque material, you can reduce the amount of light that's detected without going through the tissue." *Id.* at 1211:10-1212:3. Lumidigm expressly confirms that its detectors 36 are "recessed from the sensor surface 39 in optically opaque material 37" and that this ***opaque*** material performs "optical blocking" to avoid unwanted light (or light piping) through the protrusion:

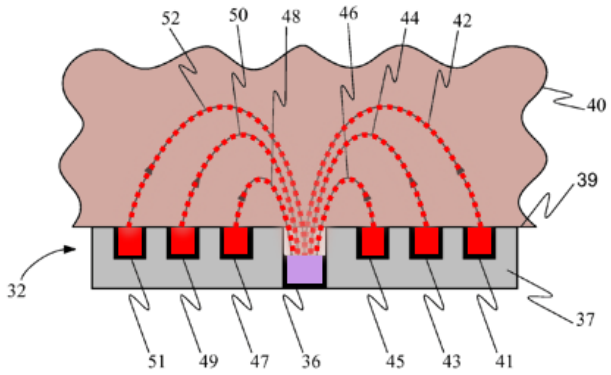

FIG. 2

RX-0411 at Fig. 2, 8:1-11; RDX-8.29 (summarizing RX-0411). A POSITA would have understood that openings made of opaque material over each detector avoid light piping through the protrusion (*i.e.*, light traveling from the LEDs to the photodiodes without first passing through the user's tissue). Tr. [Warren] 1212:11-1213:3, 1228:16-23. Lumidigm specifically discusses using this configuration to provide "optical blocking" for "shunted" light. RX-0411 at 7:64-8:11. Light shunting is another term for light piping. Tr. [Warren] 1212:22-1213:3.

Limitation [1F]: Lumidigm discloses "***one or more processors configured to receive one or more signals from the photodiodes and calculate a measurement of the physiological parameter of the user***."

[redacted]

The concept of including a processor to receive signals from photodiodes, calculate measurements, and "manage the overall set of events" is another "well-known idea." Tr. [Warren] 1213:4-1214:1. Lumidigm discloses that its portable devices, including the user-worn wristwatch, include a "processor [that] is configured to operate the electronic arrangement to perform the standard function and to operate the biometric sensor." RX-0411 at 3:28-31. Lumidigm repeatedly refers to the processors in its devices, and confirms that "[o]nce the light passing through the tissue is detected, the signals can be digitized and recorded by standard techniques," and the "recorded data can then be processed" into spectral data "as is known to one of ordinary skill in the art." *Id.* at 9:58-62. This would include receiving and processing signals from the photodiodes and calculating physiological measurements. Tr. [Warren] 1213:4-1214:1; RX-0411 at 19:16-28 (confirming that system "quantif[ies] oxygenation levels").

Figure 9 provides an example of a "computational device" for "management of the functionality discussed herein" including "processor 332" and "processing acceleration unit 346":

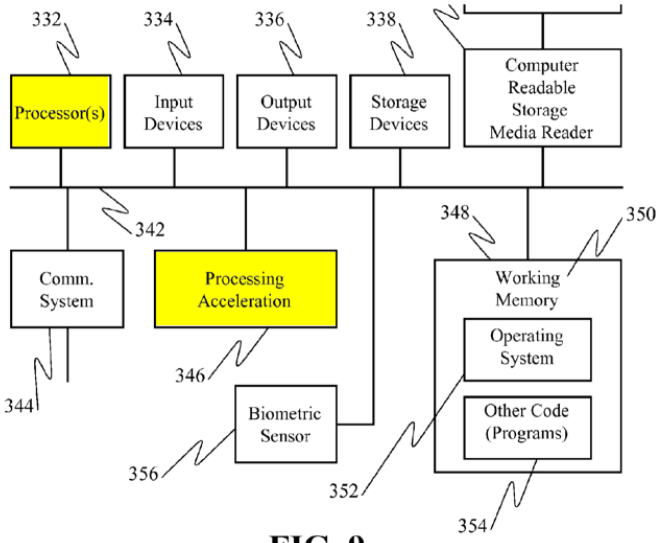

FIG. 9

RX-0411 at Fig. 9, 12:56-67; Tr. [Warren] 1213:4-1214:1; RDX-8.30 (summarizing RX-0411). Lumidigm further confirms that the components in Figure 9 can be implemented in a "separated

[redacted]

or more integrated manner." RX-0411 at 12:61-63. A POSITA would have understood that the processors could be implemented in a separate reader or integrated onto the same device as the sensor. Tr. [Warren] 1213:4-1214:1.

(b) '501 Patent, Claim 12

Lumidigm discloses "***[t]he user-worn device of claim 1***" for the reasons stated above for claim 1.

Lumidigm further discloses "***wherein the convex surface of the protrusion is an outermost surface configured to contact the tissue of the user and conform the tissue into a concave shape***. Lumidigm discloses a "protrusion with a convex surface" for the reasons stated above for '501 limitation [1C]. A POSITA would have recognized that, if a sensor has a protrusion with a convex surface, and that protrusion is positioned next to tissue, "any pressure at all will conform the tissue into a concave shape." Tr. [Warren] 1214:2-11. Dr. Madisetti confirmed the same understanding. Tr. [Madisetti] 686:1-18.

(3) '502 Patent, Claim 22

Lumidigm discloses all limitations of '502 claim 22 and anticipates this claim or, at a minimum, renders it obvious. Tr. [Warren] 1215:11-1224:2.

(a) '502 Patent, Claim 19

Limitation [19Preamble]: Lumidigm discloses "[a] ***user-worn device configured to non-invasively measure***" a physiological parameter for the reasons discussed above for '501 claim 1, preamble.

Lumidigm further discloses that its user-worn device "***measure[s] an oxygen saturation of a user***." Lumidigm explains that its devices can be used to perform a variety of functions including measuring the "physiological state of an individual" using "a hemoglobin monitor." RX-

[redacted]

0411 at 19:16-19. Lumidigm further explains that this functionality detects "spectroscopic changes [that] are correlated with oxygenation and/or hemoglobin levels in the blood" and provides "the ability to quantify oxygenation levels." *Id*. at 19:22-28; RDX-8.35 (summarizing RX-0411).

A POSITA would have recognized from these disclosures that Lumidigm's devices are configured to quantify oxygenation levels. Tr. [Warren] 1215:18-1216:9. Moreover, a POSITA "would not have needed any additional information to make [pulse oximetry functionality] work" in Lumidigm's watch embodiment because this functionality was well understood at the time. *Id*. at 1216:10-25. In fact, Professor Warren and his students were able to build sensors and "work[] with them on their wrists" years earlier. *Id.* Although Apple had significant challenges to overcome in implementing pulse oximetry on Apple Watch, given the limited space and other competing features in Apple Watch, the simple light management problems addressed in the Poeze Patents had already been solved. DocID 773735 (substituting Warren Op. ¶ 244 for Tr. [Warren] 1217:11-21); Tr. [Warren] 1243:5-16.

Limitation [19A]: Lumidigm discloses "***a plurality of emitters configured to emit light, each of the emitters comprising at least two light emitting diodes (LEDs)***."

Lumidigm discloses that its sensor can include any number and arrangement of LEDs, including in its wristwatch embodiment, for the reasons discussed above for '501 claim 1, limitation [1A]. *E.g.*, RX-0411 at 6:38-53, 11:60-12:2, Fig. 6. Lumidigm further explains that the "light sources" can include "sets of LEDs." *Id*. at 6:48-53. A POSITA would have understood a "set of LEDs" as a "grouping" of LEDs, each including "for example, three LED dies." Tr. [Warren] 1190:25-1191:6, 1205:1-11.

[redacted]

The concept of including four or more emitters in an optical sensor, each comprising a set of LEDs, has been known for at least thirty years. Tr. [Warren] 1191:7-22, 1195:10-12. Lumidigm's illustrative examples including multiple examples with four or more sets of LEDs, including Figures 3, 5, 7A and 7B:

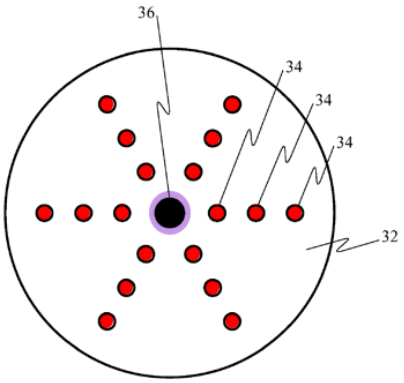

FIG. 3

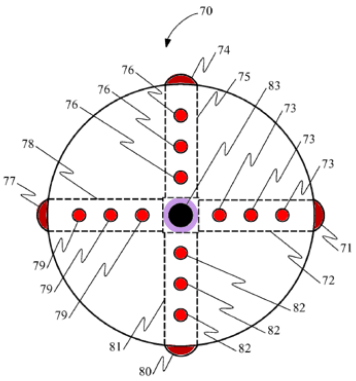

FIG. 5

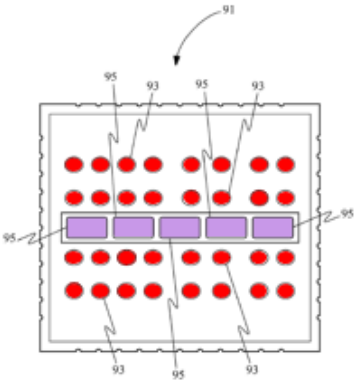

FIG. 7A

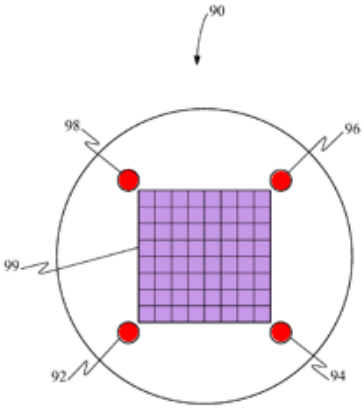

FIG. 7B

RX-0411 at Figs. 3, 5, and 7A-7B, 9:30-33; Tr. [Warren] 1220:12-1221:8.

A POSITA would have understood that the light sources disclosed in these examples would include at least four emitters, each with a set of three LEDs. Tr. [Warren] 1220:12-1221:8; RX-0411 at 6:38-53, Figs. 3, 5, and 7A-7B; RDX-8.36 (summarizing RX-0411). For example, Figure 3 would include 6 emitters, each with three radial LEDs (where the light sources are ***single*** LEDs) or 18 light sources, each with three LEDs in a set (where the light sources are ***sets*** of LEDs). *See*

[redacted]

Tr. [Warren] 1220:12-1221:8. Figures 5 and 7A similarly demonstrate four or more emitters, each with three or more LEDs, whether the circles that mark individual light sources are single LEDs or sets of LEDs. And Figure 7B demonstrates four emitters, each with a set of three LEDS, when the sources are sets of LEDs.

Limitation [19B]: Lumidigm discloses "*four photodiodes* ***arranged within the user-worn device***."

The concept of using four or more photodiodes was also well-known. Tr. [Warren] 1191:24-1192:22, 1221:9-15. Lumidigm discloses that its sensor can include any number and arrangement of photodiodes, including in its wristwatch embodiment, for the reasons discussed above for '501 claim 1, limitation [1B]. *E.g.*, RX-0411 at 11:60-12:2. Lumidigm further discloses multiple illustrative examples with "four photodiodes" or more, including in Figures 7A (five photodiodes in a linear array) and 7B (64 photodiodes arranged in rows and columns):

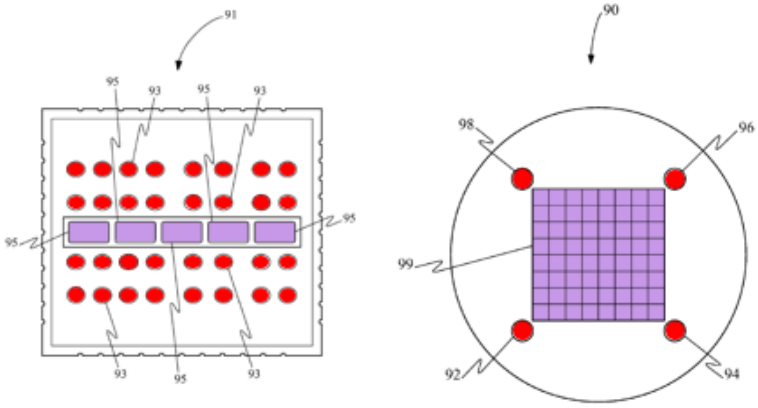

FIG. 7A FIG. 7B

RX-0411 at Figs. 7A-7B, 6:54-63; RDX-8.37 (summarizing RX-0411); Tr. [Warren] 1221:10-15.

Lumidigm also discloses that the four photodiodes are "***arranged within the user-worn device***" for the reasons discussed above for '501 claim 1, limitation [1B].

Lumidigm also discloses that these four photodiodes are "***configured to receive light after at least a portion of the light has been attenuated by the tissue of the user***" for the reasons

[redacted]

discussed above for '501 claim 1, limitation [1B]. For example, Lumidigm explains that the light detectors are "disposed relative to the light sources to detect light from the light sources that has propagated through the tissue." RX-0411 at 3:25-28; 7:26-29. A POSITA would have understood that the photodiodes would be configured to receive light attenuated by the tissue of the user. Tr. [Warren] 1209:19-1210:11.

Limitation [19C]: Lumidigm discloses "***a protrusion comprising a convex surface***" for the reasons discussed above for '501 claim 1, limitation [1C].

Lumidigm discloses "***separate openings extending through the protrusion and lined with opaque material, each opening positioned over a different one of the four photodiodes***" for the reasons discussed above for '501 claim 1, limitations [1D], [1E].

Lumidigm discloses "***the opaque material configured to reduce an amount of light reaching the photodiodes without being attenuated by the tissue***" for the reasons discussed above for '501 claim 1, limitation [1E]. For example, Lumidigm expressly confirms that the openings over the photodiodes are made from "optically opaque material 37," that this configuration "minimizes the amount of light that can be detected after reflecting off the first (epidermal) surface of the tissue," and that "[o]ther equivalent means of optical blocking can be readily established by one of ordinary skill in the art":

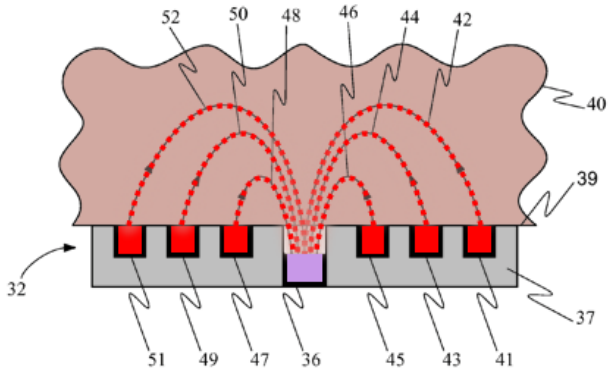

FIG. 2

[redacted]

RX-0411 at Fig. 2, 8:1-11; Tr. [Warren] 1212:11-1213:3. RDX-8.29 (summarizing RX-0411). Lumidigm further explains that the sensor can have a "reflectance geometry" so that "when the tissue is illuminated by a particular light source 41, the resulting signal detected by the detector 36 contains information about the tissue optical properties along a path between the source 41 and detector 36." RX-0411 at 7:12-14, 7:26-29.

A POSITA would have also understood that Lumidigm's use of openings made from opaque material has the benefit of allowing light to pass through to the photodiodes while reducing light piping, or the amount of light reaching the photodiodes without being attenuated by the tissue. Tr. [Warren] 1212:11-1213:3.

Limitation [19D]: Lumidigm discloses "***optically transparent material within each of the openings***."

The use of windows or other optically transparent materials, within or across openings over photodiodes, was also "well-known." Tr. [Warren] 1221:16-12:22-9, 1193:24-1194:14. Consistent with this well-known idea, Lumidigm explains that its sensor can incorporate "an optical relay (not shown) between the sensor surface 39 and the skin 40" that "transfers the light . . . from the skin back to the detector(s)," and that this optical relay can include "fiber optic face plates," "individual optical fibers," and "fiber bundles." RX-0411 at 8:19-26. Professor Warren illustrates this optical relay in blue in Figure 2:

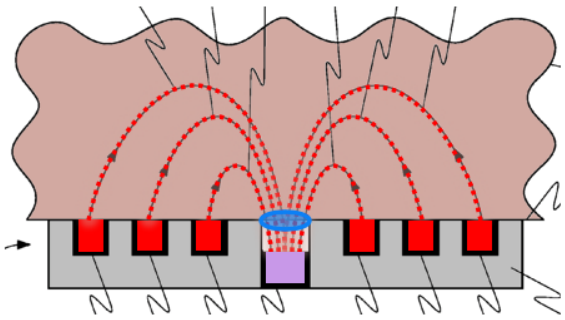

[redacted]

RX-0411 at Fig. 2; Tr. [Warren] 1221:16-1222:16; RDX-8.38 (summarizing RX-0411).

A POSITA would have understood that fiber optic face plates, individual optical fibers, and fiber bundles were well-known in the art, typically made of glass or plastic cladding, and could be placed within or arranged over the openings. Tr. [Warren] 1221:16-1222:25. A POSITA would have recognized, and Lumidigm confirms, that a well-known way to implement a fiber optic face plate would be to place it "between the sensor surface 39 and the skin" to cover individual openings. RX-0411 at 8:19-21; Tr. [Warren] 1221:16-1222:16. A POSITA would have further recognized that a fiber optic face plate could be implemented as a "single faceplate for multiple openings," or as "an individual faceplate for each of the individual openings." Tr. [Warren] 1221:16-1222:9. A POSITA would have recognized that a fiber optic face plate would be beneficial because it would "transfer light" from the tissue to the photodiodes and "protect the detector from dust and debris and dirt." *Id.* at 1193:24-1194:7, 1221:16-1222:16. A "fiber bundle" would similarly "direct light from a portion of tissue straight to the detector as a means to optimize the detection process." *Id.* at 1222:10-16.

A POSITA would have thus understood that non-invasive, optical sensing devices should have optically transparent material extending across the openings over the photodiodes and that the benefits would include providing a pathway for attenuated light to pass through to the photodiode while protecting the photodiode from damage or interference caused by contaminants from a user. *Id.* at 1193:24-1194:7, 1221:16-1222:25.

Limitation [19E]: Lumidigm discloses "***one or more processors configured to receive one or more signals from at least one of the four photodiodes and output measurements responsive to the one or more signals***" for the reasons discussed above for 501 claim 1, limitation [1E]. For example, Lumidigm discloses both calculating and outputting measurements based on

signals from the photodiodes. RX-0411 at 3:28-31, 9:58-59, 12:56-13:14, Fig. 9; Tr. [Warren] 1213:4-1214:1. A POSITA would have understood that Lumidigm's "computational devices" include one or more processors configured to use signals to output measurements of physiological parameters and that the processors could be implemented in a separate reader or integrated onto the same device. Tr. [Warren] 1213:4-1214:1.

Lumidigm also discloses that its processors can output a measurement "***indicative of the oxygen saturation of the user***" for the reasons discussed above for '502 claim 19, preamble. A POSITA would have recognized that it is the processors in the device that output the measurements associated with Lumidigm's blood oxygen function. Tr. [Warren] 1215:18-1216:25; RX-0411 at 19:16-19, 19:22-28, Fig. 9; RDX-8.35 (summarizing RX-0411).

(b) '502 Patent, Claim 20

Lumidigm discloses "[t]he ***user-worn device*** of claim 19," for the reasons discussed above for '502 claim 19.

Lumidigm also discloses "***further comprising a thermistor***." This limitation relates to the "well-known notion" that "LEDs will change their behavior depending on temperature," and that if a processor "can receive a temperature signal, in this case from a thermistor, it can adjust the operation of the user worn device." Tr. [Warren] 1223:1-20. Consistent with this notion, Lumidigm discloses that its sensor may include "additional preprocessing steps" including "performing explicit corrections to account for sensor-to-sensor variations or environmental influences of temperature" and other factors. RX-0411 at 14:21-28, Fig. 9; RDX-8.39 (summarizing RX-0411). Lumidigm also correctly comments that "[t]hese and other techniques are well-known in the art." *Id*. at 14:29.

[redacted]

A POSITA would have recognized that a thermistor was one of the "well-known" techniques in the art to perform "explicit corrections" for the "environmental influence[] of temperature," and it would have been obvious to include a thermistor in Lumidigm's device to take temperature readings so the processor could use that temperature signal to adjust operations. Tr. [Warren] 1223:1-20.

(c) '502 Patent Claim 21

Lumidigm discloses "[t]he ***user-worn device*** of claim 20," for the reasons discussed above for '502 claim 20.

Lumidigm discloses "***wherein the one or more processors are further configured to receive a temperature signal from the thermistor and adjust operation of the user-worn device responsive to the temperature signal.***" As discussed above for '502 claim 20, Lumidigm discloses "performing explicit corrections" to account for "environmental influences of temperature" and confirms this is "well known in the art." RX-0411 at 14:21-29, Fig. 9; RDX-8.39 (summarizing RX-0411). Moreover, as discussed above in connection with '501 claim 1, limitation [1E], Lumidigm repeatedly refers to its sensor's processors throughout the specification. *E.g.*, RX-0411 at 12:61-67, Fig. 9. A POSITA would have understood that adjusting operations based on temperature requires, in addition to the thermistor, one or more processors to receive the temperature signal from the thermistor and to adjust operation of the sensor responsive to the temperature signal. Tr. [Warren] 1223:1-20.

(d) '502 Patent, Claim 22

Lumidigm discloses "[t]he ***user-worn device*** of claim 21," for the reasons discussed above for '502 claim 21.

[redacted]

Lumidigm also discloses "***wherein the plurality of emitters comprise at least four emitters*, *and wherein each of the plurality of emitters comprises a respective set of at least three LEDs***," for the reasons discussed above for '502 limitation [19A]. The illustrative examples discussed in connection with '502 limitation [19A] include four emitters, each with a respective set of three LEDs. Tr. [Warren] 1220:13-1221:6.

(4) '502 Patent, Claim 28

Lumidigm discloses all limitations of '502 claim 28 and anticipates this claim or, at a minimum, renders it obvious. Tr. [Warren] 1224:3-1227:21.

Limitation [28Preamble]: Lumidigm discloses "***[a] user-worn device configured to noninvasively measure an oxygen saturation of a user, the user-worn device comprising***" for the reasons discussed above for '502 claim 19, preamble.

Limitation [28A]-[28B]: Lumidigm discloses "***a first set of light emitting diodes (LEDs), the first set of LEDs comprising at least an LED configured to emit light at a first wavelength and an LED configured to emit light at a second wavelength***" and "***a second set of LEDs spaced apart from the first set of LEDs, the second set of LEDs comprising at least an LED configured to emit light at the first wavelength and an LED configured to emit light at the second wavelength***."

As discussed above, the concept of including multiple emitters in an optical sensor, each comprising a set of LEDs, has been known for at least thirty years. Tr. [Warren] 1191:7-22, 1195:10-12. Each set of LEDs would include "for example, three LED dies," and "multiple wavelengths would be present, for example, in a multi-chip LED package." *Id.* at 1190:25-1191:6, 1205:1-11, 1224:23-1225:5.

[redacted]

Consistent with this "well-known idea," (Tr. [Warren] 1224:23-1225:5), Lumidigm discloses that its sensor can include any number and arrangement of LEDs, including sets of LEDs, and including in its wristwatch embodiment, for the reasons discussed above for '501 claim 1, limitation [1A], '502 claim 19, limitation [19A], and '502 claim 22. Lumidigm further explains that the light sources "can include some sources that have the same wavelengths as others and some sources that are different" and can include "sets of LEDs . . . with differing wavelength characteristics." RX-0411 at 6:38-53.

A POSITA reading Lumidigm would have understood that its sensor could include sets of LEDs; that those sets of LEDs could include LEDs of the same variety of differing wavelengths; and that a multi-chip LED package (a "source" in Lumidigm), commonly used at the time, could encapsulate a plurality of LED dies at multiple different wavelengths. Tr. [Warren] 1190:25-1191:6, 1224:9-1225:12.

Lumidigm provides multiple specific examples including the recited "first set" and "second set" of LEDs, which are "spaced apart" from each other, and which include LEDs configured to emit at a "first wavelength" and a "second wavelength," including the examples in Figures 3, 5, 6, 7A, and 7B:

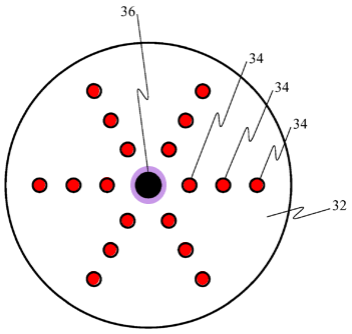

FIG. 3

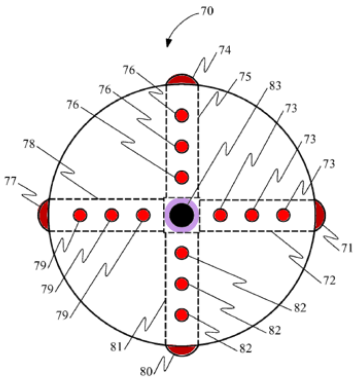

FIG. 5

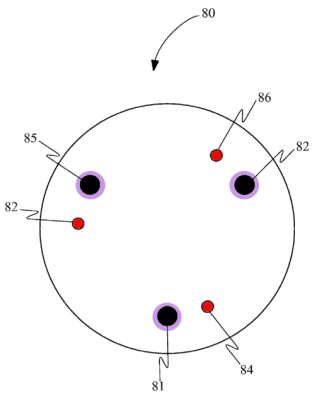

FIG. 6

[redacted]

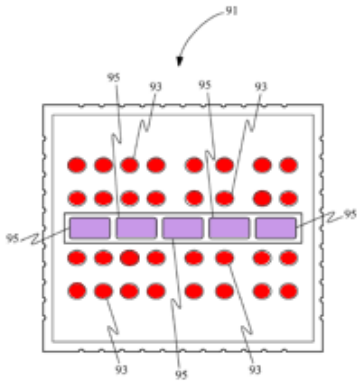

FIG. 7A

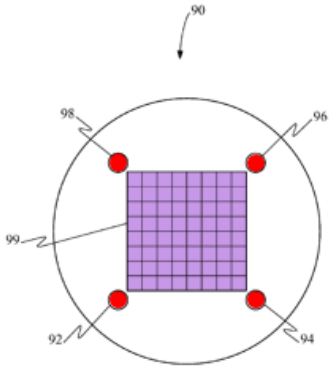

FIG. 7B

RX-0411 at Figs. 3, 5-6, and 7A-7B; Tr. [Warren] 1224:9-1225:12; RDX-8.42-RDX-8.43 (summarizing RX-0411). A POSITA would have understood, consistent with Lumidigm's disclosures, that each light source in these figures could comprise a set of LEDs, and that these sets of LEDs would be spaced apart from each other as shown in the figures. *Id*. at 6:38-53; Tr. [Warren] 1224:9-1225:12. A POSITA would have further understood that each set of LEDs would include LEDs configured to emit at a "first wavelength" and a "second wavelength," so that in each source location "multiple wavelengths would be present" (as in a multi-chip package). *Id.*

Lumidigm also incorporates by reference U.S. Patent Application Ser. No. 10/262,403 (RX-0411 at 1:40-44), which discloses in its Figure 6 multiple sets of LEDs, each with LEDs emitting at "first" and "second" wavelengths. RX-0460 ['403 Application] at Fig. 6, *see also* [0054]. A POSITA would recognize this as an example of the type of "sets of LEDs" that could readily be incorporated into Lumidigm's figures, particularly given that Lumidigm incorporates the application by reference and thus expressly suggests such a combination. Tr. [Warren] 1224:9-1225:12.

Limitation [28C]: Lumidigm discloses "***four photodiodes*** . . . ***configured to receive light after at least a portion of the light has been attenuated by the tissue of the user***" for the reasons discussed above for '502 claim 19, limitation [19B].

[redacted]

Lumidigm also discloses that the four photodiodes are "***arranged . . . on an interior surface of the user worn device***" for the reasons discussed above for '501 claim 1, limitation [1B]. Although this claim specifies four photodiodes rather than three, the same reasoning applies. Tr. [Warren] 1225:13-1226:1.

Lumidigm also discloses that the four photodiodes are "***arranged in a quadrant configuration***." The concept of arranging photodiodes in a quadrant was also "quite well-known." Tr. [Warren] 1225:13-1226:1, 1191:24-1192:22, 1195:13-15. Lumidigm explains that its detectors can be implemented "as a single element, a plurality of discrete elements, or a one- or two-dimensional array of elements." RX-0411 at 6:54-63. A POSITA would have understood that a two-dimensional array would include an arrangement of detectors in a quadrant configuration. Tr. [Warren] 1225:16-1226:1. Lumidigm specifically discloses many more than four photodiodes arranged in a quadrant in Figure 7B and states that "many variations on this configuration exist":

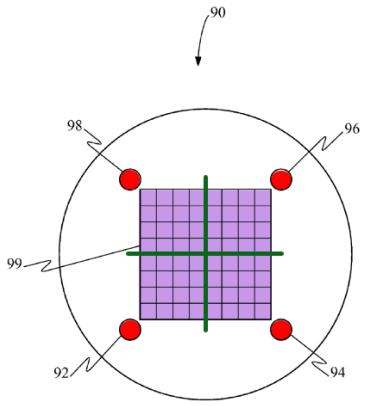

FIG. 7B

RX-0411 at Fig. 7B; RX-0411 at 9:42-45; Tr. [Warren] 1225:13-1226:1; RDX-8.44 (summarizing RX-0411). Figure 7B shows 64 detectors arranged in a quadrant, and a POSITA would recognize that any four of the photodiodes in this figure also could be arranged in a quadrant. Tr. [Warren] 1225:16-1226:1.

[redacted]

Limitation [28D]: Lumidigm discloses "***a thermistor configured to provide a temperature signal***" for the reasons discussed above for '502 claims 20 and 21.

Limitation [28E]: Lumidigm discloses "***a protrusion arranged above the interior surface, the protrusion comprising: a convex surface***" for the reasons discussed above for '501 claim 1, limitation [1C].

Limitation [28F]: Lumidigm discloses "***a plurality of openings in the convex surface, extending through the protrusion, and aligned with the four photodiodes***," for the reasons discussed above for '501 claim 1, limitation [1D] and '502 claim 19, limitation [19C]. A POSITA would have recognized that, for configurations with four or more photodiodes arranged in a quadrant, such as shown in Figure 7B, there would be an opening over each photodiode. Tr. [Warren] 1225:16-1226:1. This claim also specifies that the openings are in the convex surface of the protrusion, but the same reasoning applies as for the earlier limitations. *Id.* at 1224:3-8. Lumidigm teaches that the openings should be located within the convex surface to "incorporate ergonomic features that allow for good optical and mechanical coupling with the tissue being measured." RX-0411 at 7:57-63. Achieving good "optical coupling" would of course require locating the optical components (including the detectors and associated openings) so that they are aligned with the protrusion's convex surface. *Id.; see also* 8:27-28 ("Optionally, the surface of the light relay can be contoured to fit specific product applications and ergonomic requirements.").

Lumidigm also discloses "***each opening defined by an opaque surface configured to reduce light piping***," for the reasons discussed above for '501 claim 1, limitation [1E] and '502 claim 19, limitation [19C]. Although this claim references "reducing light piping" rather than "avoiding light piping," the same reasoning applies. Tr. [Warren] 1224:3-8.

[redacted]

Limitation [28G]: Lumidigm discloses "***a plurality of transmissive windows, each of the transmissive windows extending across a different one of the openings***" for the reasons discussed above for '502 claim 19, limitation [19D]. Although this claim specifies "transmissive windows extending across" the openings rather than "transparent materials within" the openings, the same reasoning applies. Tr. [Warren] 1224:3-8. A POSITA would have recognized that the fiber optic face plates and fiber optic bundles referenced in Lumidigm and discussed in connection with limitation [19D] are transmissive windows and that each would extend across a different one of the openings. Tr. [Warren] 1221:16-1222:25; RX-0411 at 8:19-26.

Limitation [28H]: Lumidigm discloses "***at least one opaque wall extending between the interior surface and the protrusion, wherein at least the interior surface, the opaque wall and the protrusion form cavities***." As discussed above, Figure 2 shows a cross-section of Figure 1, illustrating the detectors "recessed from the sensor surface 39 in optically opaque material 37":

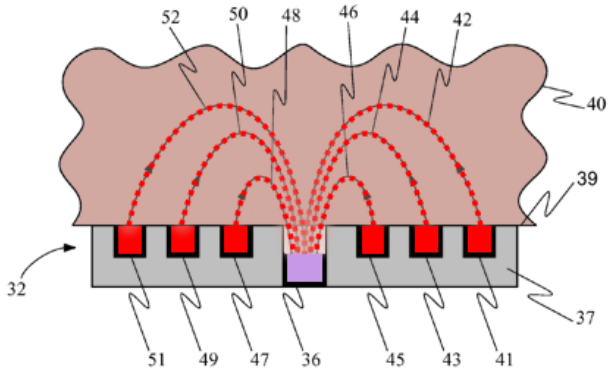

FIG. 2

RX-0411 at Fig. 2, 8:1-4; RDX-8.45 (summarizing RX-0411). Lumidigm expressly states, and a POSITA would have understood, that detector 36 in Figures 1 and 2 is representative and that it may comprise "a plurality of discrete elements." RX-0411 at 6:54-56, *see also* 3:9-11; Tr. [Warren] 1205:1-11. A POSITA would have further understood that there would be opaque walls

[redacted]

between the interior surface of the sensor and the protrusion, thereby forming cavities or recesses where the respective photodiodes are located. Tr. [Warren] 1226:2-8; RX-0411 at 8:1-11, Fig. 2.

Lumidigm further discloses that "***the photodiodes are arranged on the interior surface within the cavities***" for the reasons discussed above and for '501 claim 1, limitation [1B] and '502, claim 28, limitation [28C].

Limitation [28I]: Lumidigm discloses "***one or more processors configured to receive one or more signals from at least one of the photodiodes and calculate an oxygen saturation measurement of the user***" for the reasons discussed above for '502 claim 19, limitation [19E].

Lumidigm also discloses "***the one or more processors further configured to receive the temperature signal***" for the reasons discussed above for '502 claim 21.

Limitation [28J]: Lumidigm discloses "***a network interface configured to wirelessly communicate the oxygen saturation measurement to at least one of a mobile phone or an electronic network***." By the time of the Poeze Patents, the use of wireless communications for sensors was also a "well-known idea." Tr. [Warren] 1226:9-21. Lumidigm repeatedly confirms that its sensors communicate measurements through wireless communication means. RX-0411 at 11:38-42, 13:9-12, Fig. 8B. Lumidigm also discloses that its devices have a "communication system 344" and that it "may comprise a wired, wireless, modem, and/or other type of interfacing connection and permits data to be exchanged with external devices." *Id*. at 13:9-12. Lumidigm shows its communications system 344 in Figure 9 and explains that these components can be incorporated into any of its exemplary embodiments including the wristwatch embodiment. *Id*. at Fig. 9, *see also* 12:58-61. Lumidigm also expressly illustrates its watch embodiment with wireless communications 103:

[redacted]

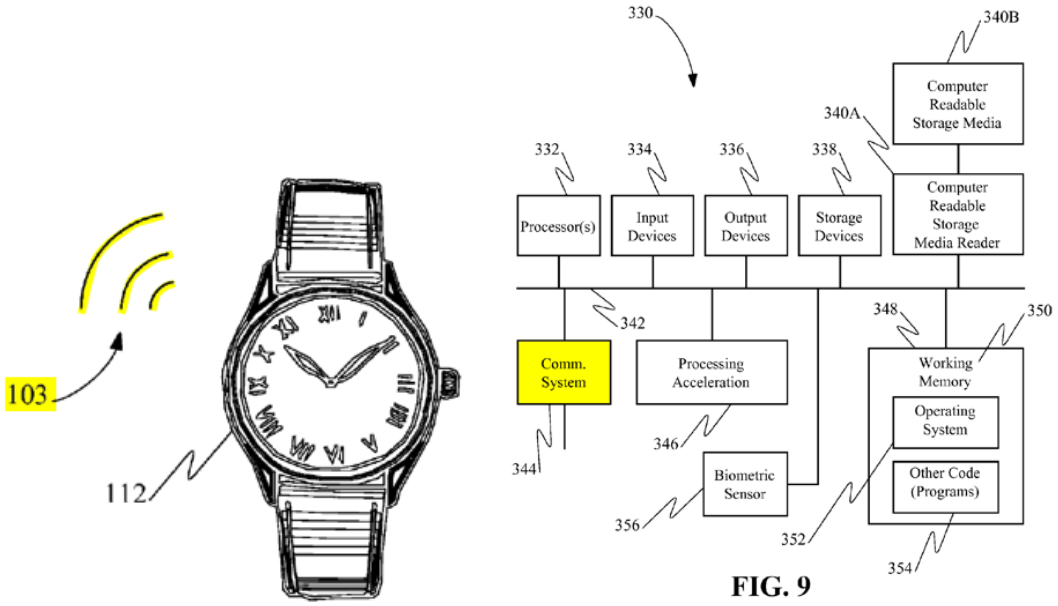

FIG. 9

RX-0411 at Figs. 8B and 9; RDX-8.46 (summarizing RX-0411). Lumidigm further explains the wristwatch embodiment's wireless communications capabilities in connection with the fob embodiment, which the patent describes as having identical operation to the wristwatch embodiment (including the wireless RF signals 103 shown in Figure 8B). RX-0411 at 11:38-42, 11:60-12:2.

A POSITA would have understood that a device with a "wireless . . . type of interfacing connection" (RX-0411 at 13:9-12) would have a network interface for wirelessly communicating the measurement of a physiological parameter, including oxygenation levels, to a mobile phone or computer network. *Id*. at 11:38-42, 19:22-28, Figs. 8B and 9; Tr. [Warren] 1226:9-21.

Further, Lumidigm also discloses that its processors can output a measurement indicative of "oxygen saturation" for the reasons discussed above for 502 claim 19, limitation [19E].

Limitation [28K]: Lumidigm discloses "a ***user interface comprising a touch-screen display, wherein the user interface is configured to display indicia responsive to the oxygen saturation measurement of the user***." The use of user interfaces with touch screens was also

[redacted]

"well known" by the time of the Poeze Patents. Tr. [Warren] 1226:23-1227:3. Lumidigm discloses embodiments of portable electronic devices that were well known to have touch-screens—a mobile phone and a PDA— and explains that those devices "display the retrieved information on the portable electronic device" in connection with Figures 8D and 8E. RX-0411 at 21:29-33; RDX-8.47 (summarizing RX-0411).

A POSITA would have understood from these disclosures that the recited user interface with a touch-screen display could be incorporated into any of the sensor embodiments, including the wristwatch embodiment. Tr. [Warren] 1226:23-1227:7.

Limitation [28L]: Lumidigm discloses "***a storage device configured to at least temporarily store at least the measurement***." Lumidigm repeatedly refers to processing, measurement, acquisition, and use of information, and a POSITA would recognize that such a device would require memory, another well-known idea, to carry out these operations. RX-0411 at Fig. 9; Tr. [Warren] 1227:9-14. Lumidigm specifically discloses hardware elements, software elements, and storage (including storage device 338, memory 348, and computer-readable storage medium 340*b*) that store measurements taken by the sensor in Figure 9 and the related discussion:

[redacted]

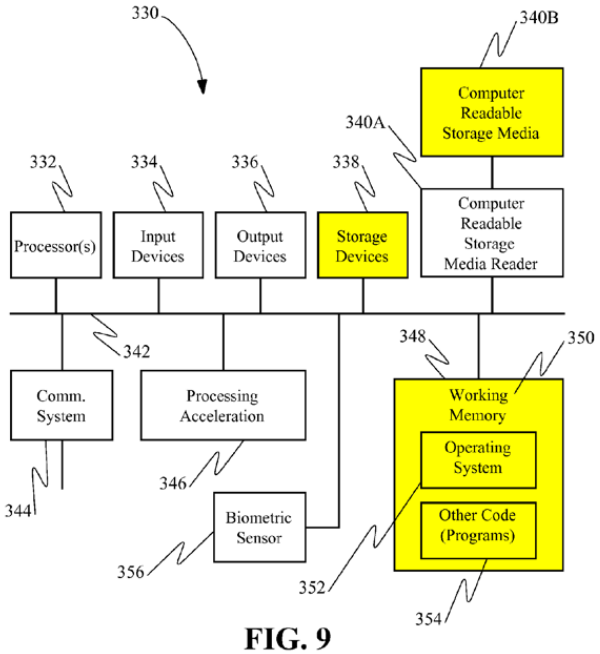

FIG. 9

RX-0411 at Fig. 9, 12:66-13:14; RDX-8.48 (summarizing RX-0411). Lumidigm further discloses that "[t]he storage devices typically hold information defining the stored spectra," which A POSITA would have understood to mean at least the temporary storage of the measurement (i.e., spectra). RX-0411 at 12:66-13:14; Tr. [Warren] 1227:9-14.

Limitation [28M]: Lumidigm discloses "a ***strap*** configured to position the user-worn device on the user." Specifically, Lumidigm discloses a strap for its wristwatch embodiment:

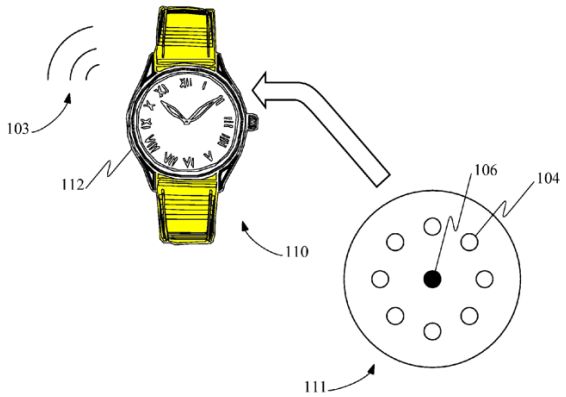

FIG. 8B

RX-0411 at Fig. 8B, 11:60-65; Tr. [Warren] 1227:16-17; RDX-8.49 (summarizing RX-0411).

[redacted]

(5) '648 Patent, Claim 12

Lumidigm discloses all limitation of '648 claim 12 and anticipates this claim or, at a minimum, renders it obvious. Tr. [Warren] 1227:22-1228:10.

(a) '648 Claim 8

Limitation [8Preamble]: Lumidigm discloses "a ***user-worn device configured to non-invasively determine measurements of a physiological parameter of a user, the user-worn device comprising***" for the reasons discussed above for '501 claim 1, preamble.

Limitation [8A]-[8B]: Lumidigm discloses "***a first set of light emitting diodes (LEDs), the first set comprising at least an LED configured to emit light at a first wavelength and at least an LED configured to emit light at a second wavelength"*** and ***"a second set of LEDs spaced apart from the first set of LEDs, the second set of LEDs comprising an LED configured to emit light at the first wavelength and an LED configured to emit light at the second wavelength***," for the reasons discussed above for '502 claim 28, limitations [28A] and [28B].

Limitation [8C]: Lumidigm discloses "***four photodiodes***" for the reasons discussed above for '502 claim 19, limitation [19B] and '502 claim 28, limitation [28C].

Limitation [8D]: Lumidigm discloses "a ***protrusion comprising a convex surface***" for the reasons discussed above for '501 claim 1, limitation [1C].

Lumidigm also discloses in "***at least a portion of the protrusion comprising an opaque material***" for the reasons discussed above for '501 claim 1, limitation [1E], and '502 claims 19, limitation [19C], and claim 28, limitations [28F] and [28H]. Although this claim specifies that a portion of the protrusion comprises opaque material, rather than the surfaces of the openings or a wall, the same reasoning applies. Tr. [Warren] 1227:22-1228:2. Lumidigm explains that "the

[redacted]

body of the sensor head 32," which includes the protrusion, is made from "optically opaque material 37" to provide "optical blocking" and minimize unwanted light. RX-0411 at 8:1-11.

Limitation [8E]: Lumidigm discloses "***a plurality of openings provided through the protrusion and the convex surface, the openings aligned with the photodiodes***" for the reasons discussed above for '501 claim 1, limitation [1D], '502 claim 19, limitation [19C], and '502 claim 28, limitation [28F]. The same reasoning applies. Tr. [Warren] 1227:22-1228:2.

Limitation [8F]: Lumidigm discloses "***a separate optically transparent window extending across each of the openings***" for the reasons discussed above for '502 claim 19, limitation [19D] and '502 claim 28, limitation [28G]. Although this claim specifies a "separate optically transparent window" across each opening, rather than transparent material or a transmissive window, the same reasoning applies. Tr. [Warren] 1227:22-1228:2. A POSITA would have recognized that the fiber optic face plates and fiber bundles referenced in Lumidigm and discussed in connection with above limitations are optically transparent windows and that each would extend across a different one of the openings. Tr. [Warren] 1221:16-1222:25.

Limitation [8G]: Lumidigm discloses "***one or more processors configured to receive one or more signals from at least one of the photodiodes and output measurements of a physiological parameter of a user***" for the reasons discussed above for '502 claim 19, Limitation [19E].

Limitation [8H]: Lumidigm discloses "***a housing***." For example, Lumidigm discloses that, for its wristwatch embodiment, "the biometric reader 111 is built into the case of a wristwatch 112 and operates based upon signals detected from the skin in the area of the wrist." RX-0411 at 11:60-64, Fig. 8B; Tr. [Warren] 1228:3-6; RDX-8.52 (summarizing RX-0411).

[redacted]

Limitation [8I]: Lumidigm discloses "***a strap configured to position the housing proximate tissue of the user when the device is worn***" for the reasons discussed above with respect to claim 28, limitation 28[M].

(b) '648 Claim 12

Lumidigm discloses "[***t]he user-worn device of claim 8***," for the reasons discussed above for '648 claim 8.

Lumidigm discloses "***wherein the physiological parameter comprises oxygen or oxygen saturation***" for the reasons provided above with respect to claim '502 claim 19, preamble.

(6) '648 Patent, Claims 24 and 30

Lumidigm discloses all limitations '648 claims 24 and 30 and anticipates these claims or, at a minimum, renders them obvious. Tr. [Warren] 1228:11-1229:14.

(a) '648 Claim 20

Limitation [20Preamble]: Lumidigm discloses "***[a] user-worn device configured to non-invasively determine measurements of a user's tissue, the user-worn device comprising***" for the reasons discussed above with respect to '501 claim 1, preamble.

Limitation [20A]: Lumidigm discloses "***a plurality of light emitting diodes (LEDs)***" including for the reasons discussed above for '501 claim 1, limitation [1A].

Limitation [20B]: Lumidigm discloses "***at least four photodiodes configured to receive light emitted by the LEDs, the four photodiodes being arranged to capture light at different quadrants of tissue of a user***" for the reasons discussed above for '502 claim 19, limitation [19B] and '502 claim 28, limitation [28C]. Although this claim specifies that the four photodiodes are "arranged to capture light at different quadrants of tissue of a user," rather than being arranged "in a quadrant configuration," the same reasoning applies. Tr. [Warren] 1228:11-15.

[redacted]

Limitation [20C]: Lumidigm discloses "***a protrusion comprising a convex surface***" for the reasons discussed above for '501 claim 1, limitation [1C], '502 claim 19, limitation [19C], and '502 claim 28, limitations [28E].

Limitation [20D]: Lumidigm discloses "***a plurality of through holes . . . arranged over a different one of the at least four photodiodes***" for the reasons discussed above for '501 claim 1, limitation [1D], '502 claim 19, limitation [19C] and '502 claim 28, limitations [28F]. Although this claim refers to "through holes" rather than "openings," the same reasoning applies. Tr. [Warren] 1211:10-1212:10, 1224:3-8, 1227:22-1228:2.

Lumidigm also discloses "***each through hole including a window***" for the reasons discussed above for '502 claim 19, limitation [19D] and '502 claim 28, limitation [28G].

Limitation [20E]: Lumidigm discloses "***one or more processors configured to receive one or more signals from the at least one of the photodiodes and determine measurements of oxygen saturation of the user***" for the reasons discussed above for '502 claim 19, limitation [19E].

(b) '648 Patent, Claim 24

Lumidigm discloses '648 claim 24, which recites "***[t]he user-worn device of claim 20, wherein the protrusion comprises opaque material configured to substantially prevent light piping***" for the reasons discussed above for '501 claim 1, limitation 1[E] and '502 claim 28, limitation [28F]. Although this claim references "substantially preventing light piping," rather than "reducing" or "avoiding light piping," the same reasoning applies. Tr. [Warren] 1228:16-23. Lumidigm explains that "the body of the sensor head," which includes the protrusion, is made from "optically opaque material" and that the detectors are recessed from the sensor surface in this optically opaque material to provide "optical blocking" and to "minimize" "shunted" light and other unwanted light from reaching the detectors. RX-0411 at 7:64-8:10. Lumidigm further

[redacted]

explains that "[o]ther equivalent means of optical blocking can be readily established by one of ordinary skill in the art." *Id*. at 8:10-11. A POSITA would have understood that the use of opaque material has the benefit of allowing light to pass through to the photodiodes while reducing light piping and other forms of optical noise. Tr. [Warren] 1212:11-1213:3, 1228:16-23; RDX-8.55 (summarizing RX-0411). Lumidigm specifically discusses using opaque material to provide "optical blocking" for "shunted" light, and light shunting is another term for light piping. Tr. [Warren] 1212:22-1213:3.

Significantly, the Poeze specification attributes its asserted reduction in light piping to the fact its protrusion is made from opaque material. *E.g.*, JX-001 ['501 patent] at 7:65-8:8, 37:51-52. If the Poeze Patents' use of opaque material is sufficient to support the claims, then Lumidigm's use of opaque material also meets the claim language. *See* Tr. [Warren] 1202:19-1203:9; RDX-8.17 (summarizing JX-001).

(c) '648 Patent, Claim 30

Lumidigm discloses '648 claim 30, which recites "***[t]he user-worn device of claim 20, wherein the protrusion comprises one or more chamfered edges***." The use of chamfered edges was also a "well-known mechanical principle." Tr. [Warren] 1228:24-1229:10. Lumidigm explains its sensor head can have essentially any shape, "including oval, square and rectangular shapes." RX-0411 at 7:57-63. Lumidigm also shows beveled edges on the top face of its watch in Figure 8B. A POSITA would have recognized that this type of edge also could be used for the sensor head. Tr. [Warren] 1228:24-1229:10. It would have been obvious to a POSITA that a protrusion for a user-worn device should have chamfered edges, as it was well-known in the art that a sensor that comes in contact with tissue should "incorporate ergonomic features" to increase comfort and optimally contact the user's tissue. Tr. [Warren] 1228:24-1229:10; RX-0411 at 7:57-

[redacted]

63 (referencing desirability of "incorporat[ing] ergonomic features" into sensor head); RDX-8.56 (summarizing RX-0411).

c. Obviousness Under 35 U.S.C. § 103(a)

Although Lumidigm alone discloses all limitations of the asserted claims, the following combinations also alternatively render the asserted claims obvious:

Combinations	Asserted Claims of Poeze Patents Rendered Obvious
Lumidigm + **Seiko 131 + Cramer**	All claims
Lumidigm + **Webster** Lumidigm + Seiko 131 + Cramer + **Webster**	'502 claim 22
Lumidigm + Webster + **Apple '047** Lumidigm + Seiko 131 + Cramer + Webster + **Apple '047**	'502 claim 28

See Tr. [Warren] 1229:11-1243:4. Seiko 131 and Cramer are wristwatch-based sensors, like Lumidigm, and teach most disputed limitations. Webster also teaches the "thermistor" limitations of '502 claims 22 and 28, and Apple '047 teaches the "user interface comprising a touch screen display" limitation of '502 claim 28. *Id*.

(1) Lumidigm in View of Seiko 131 and Cramer Render Obvious All Asserted Claims

U.S. Patent No. 5,766,131 ("Seiko 131"), titled "Pulse-Wave Measuring Apparatus," was filed July 30, 1996, issued June 16, 1998, and discloses a user-worn "wristwatch type" light-based sensor for physiological measurements. RX-0666 at Abstract; Tr. [Warren] 1230:18-1231:8; RDX-8.61-RDX-8.62 (summarizing RX-0666).

U.S. Patent No. 4,224,948 ("Cramer"), titled "Wrist Borne Pulse Meter/Chronometer," was filed November 24, 1978, issued September 30, 1980, and discloses a light-based physiological

measuring device "worn as an ordinary wristwatch." RX-0670 at Abstract; *see* Tr. [Warren] 1231:9-1232:9. Cramer identifies as a "suitable detector" the CLT 2160 photodiode. RX-670 at 5:33-34; RX-1221 [CLT 2160 Data Sheet]; RDX-8.63-RDX-8.65 (summarizing RX-0670, RX-1221).

Lumidigm, Seiko 131, and Cramer are analogous art in the same field of wearable, wristwatch-based physiological measuring devices, and a POSITA would have been motivated to modify Lumidigm's wristwatch based on the relevant teachings of Seiko 131 and Cramer, including the teachings in subsections (a) through (d) below, and would have had a reasonable expectation of success in doing so. Tr. [Warren] 1237:4-1238:6.

(a) A "protrusion comprising a convex surface" ('501 claim 12 [1C], '502 claims 22 [19C] and 28 [28E], '648 claims 12 [8D], 24 [20C], and 30 [20C]) and a protrusion with "an outermost surface configured to contact the tissue of the user and conform the tissue into a concave shape" ('501 claim 12 [12])

The use of a protrusion with a convex surface, configured to contact the tissue of the user and conform the tissue into a concave shape, was "well-known" in the art at the time the Poeze Patents were filed, dating back to at least the "early 70s," and was disclosed in multiple references including, for example, Seiko 131 and Cramer. Tr. [Warren] 1210:13-1211:8, 1194:17-1195:5, 1195:20-22; *see also* § IV.D.1.a (State of the Art), *supra*. Lumidigm itself discloses this limitation. *See* § IV.D.1.b.(2), *supra*. Moreover, a POSITA would naturally look to other references in the field to improve on Lumidigm's disclosures, and Lumidigm ***expressly suggests*** such a combination in its teaching that its sensor head "***may also have a compound curvature on the optical surface*** to match the profile of a device in which it is mounted, to incorporate ergonomic features that

[redacted]

allow for good optical and mechanical coupling with the tissue being measured, or for other technical or stylistic reasons." RX-0411 at 7:57-63; Tr. [Warren] 1210:13-1211:8, 1233:1:14.

Seiko 131 and Cramer both disclose these limitations. Seiko 131 discloses a wristwatch-based non-invasive physiological sensor with a ***convex protrusion***. In the Figure 28 embodiment, the outside surface of the light transmittance plate 341A has a convex curve:

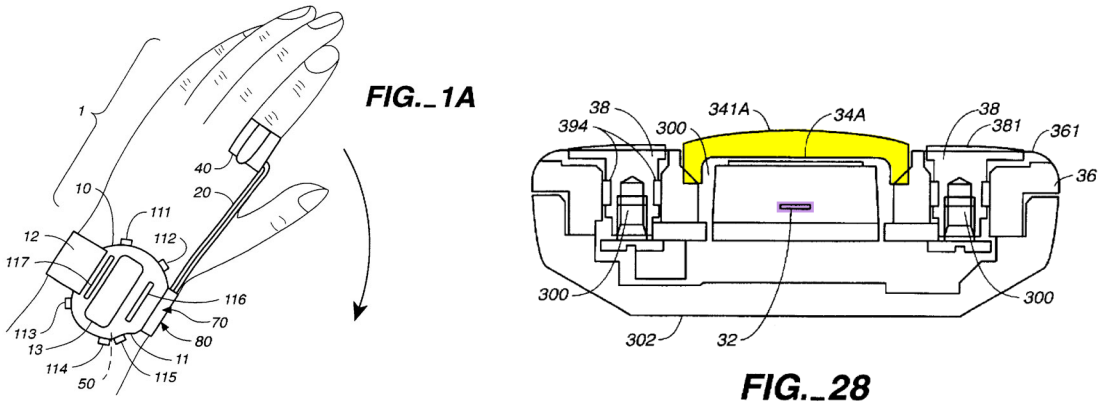

RX-0666 at Figs. 1A and 28, 3:22-28, 19:5-8; Tr. [Warren] 1232:10-20; RDX-8.67-RDX8.68 (summarizing RX-0666). Seiko 131 describes this convex protrusion as "improving" contact between the light transmittance and the tissue. RX-0666 at 3:22-28, 19:5-8; Tr. [Warren] 1245:17-1246:3.

Cramer also discloses these limitations. Cramer, like Seiko 131, discloses a wristwatch-based non-invasive physiological sensor with a protrusion with a ***convex surface***:

[redacted]

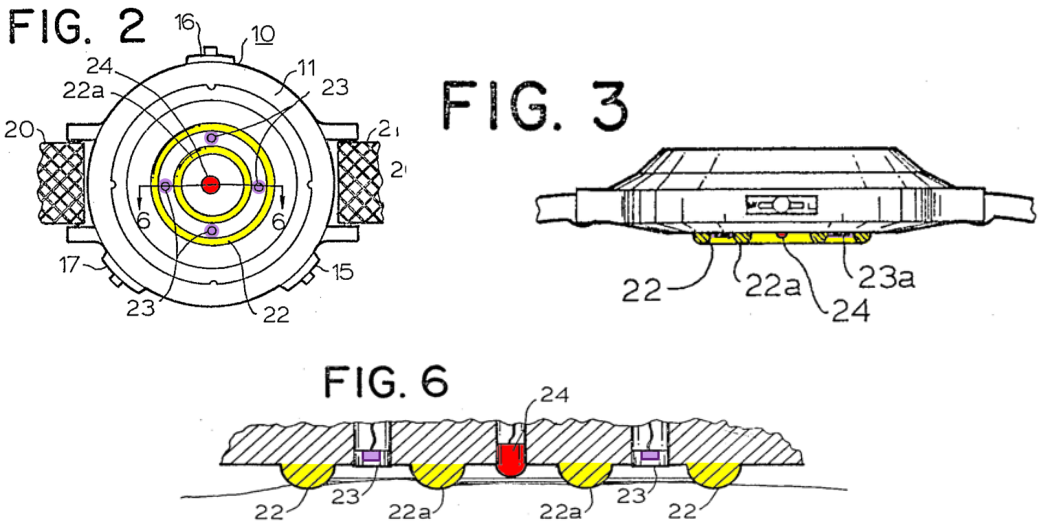

RX-0670 at Figs. 2, 3, and 6, 5:45-51; Tr. [Warren] 1232:21-25; RDX-8.67-RDX-8.68 (summarizing RX-0670). Cramer also recognizes the benefits of its protrusion as "providing a relatively large are of intimate contact with the user's wrist" and "insuring both comfortable wearing and sufficient contact" for effective sensing. RX-0670 at 5:45-51, Figs. 3 and 6; Tr. [Warren] 1245:17-1246:12.

A POSITA would have understood that, when a protrusion has a convex surface, the outermost surface of this protrusion will conform the user's tissue into a concave shape when it contacts the user's tissue. Tr. [Warren] 1214:2-11, 1232:10-1232:25.

A POSITA would have been motivated to combine Lumidigm's watch with Seiko 131's and Cramer's teachings of protrusions with convex surfaces because (1) Lumidigm expressly suggests the combination in stating that its protrusion can have a "compound curvature" (RX-0411 at 7:58-63); and (2) a POSITA would have independently looked to literature like Seiko 131 and Cramer for the shape of a protrusion as the benefits were well-known, and in fact, Seiko 131 and Cramer themselves state these benefits and suggest including this feature in a watch. Tr. [Warren] 1233:1-14, 1245:17-1246:3; RDX-8.68 (summarizing RX-0411, RX-0666, RX-0670). Indeed,

[redacted]

Seiko 131 and Cramer both teach the benefits of adding a convex protrusion, both generally and on a wrist-based sensor. RX-0666 at 3:22-28, Figs. 1A and 28; RX-0670 at 5:45-51, Figs. 1 and 6.

(b) A plurality of "openings" or "through holes," that are "positioned" or "arranged" over or "aligned with the photodiodes," and that each include "an opaque lateral surface" or are "lined with opaque material," that is configured to "avoid" or "reduce light piping" or to "reduce an amount of light reaching the photodiodes without being attenuated by the tissue" ('501 claim 12 [1D-E], '502 claims 22 [19C] and 28 [28F], '648 claims 12 [8E], 24 and 30 [20D]), and a "protrusion compris[ing] opaque material configured to substantially prevent light piping" ('648 claims 24 and 30 [24]).

The use of openings or through holes, positioned or arranged over or aligned with photodiodes, including openings or through holes with opaque lateral surfaces or lined with opaque material configured to provide optical blocking, to reduce, avoid, or substantially prevent light piping, and to reduce an amount of light reaching the photodiodes without being attenuated by tissue, was also "well-known" in the art at the time the Poeze Patents were filed, dating back to the "late 60s," and was disclosed in multiple references including, for example, Seiko 131 and Cramer. Tr. [Warren] 1211:10-1212:3, *see also* 1192:25-1193:6; § IV.D.1.a (State of the Art), *supra*. Lumidigm itself discloses these limitations. *See* § IV.D.1.b.(2), *supra*. Moreover, a POSITA would naturally look to other references in the field to improve on Lumidigm's disclosures, and Lumidigm expressly suggests such a combination in its teaching that its sensor head includes detectors "***recessed from the sensor surface 39 in optically opaque material 37***," that this "recessed placement of detector 36 minimizes the amount of light that can be detected after reflecting off the first (epidermal surface of the tissue" and provides "***optical blocking***," and

that "other equivalent means of optical blocking can readily be established" by a POSITA. RX-0411 at 7:64-8:11, Figs. 2 and 6; Tr. [Warren] 1211:10-1214:1, 1234:10-21.

Seiko 131 discloses these limitations. Seiko 131's sensor includes a single photodiode, and an ***opening*** with ***opaque lateral surfaces*** positioned and arranged over and aligned with that photodiode. RX-0666 at 10:30-36, Fig. 28. Figure 28 shows this opening between the detector and the user's tissue:

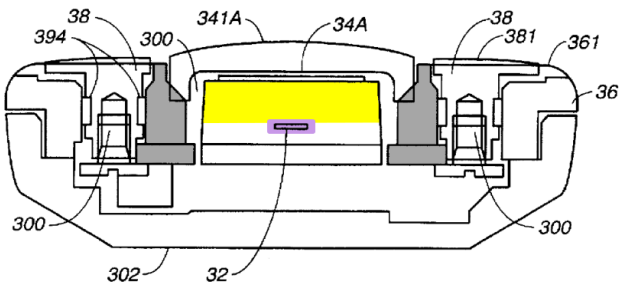

FIG._28

RX-0666 at Fig. 28. A POSITA would have recognized that, in sensors with multiple photodiodes, there would be similar openings over each photodiode to allow light to reach the photodiodes after it has passed through the user's tissue. Tr. [Warren] 1212:4-10, *see also* 1211:10-1213:3, 1225:16-1226:1.

Cramer also discloses these limitations. Cramer's sensor includes four photodiodes, and separate ***openings*** with ***opaque lateral surfaces*** positioned and arranged over each of the four photodiodes. RX-0670 at 5:41-62, Figs. 3 and 6. Cramer states that a "suitable detector" for its embodiments is the Clairex "CLT 2160 photo diode." *Id.* at 5:33-35; RX-1221 at 1. Cramer describes and its figures show four of the CLT 2160 detectors arranged in a circular array (i.e., a quadrant):

[redacted]

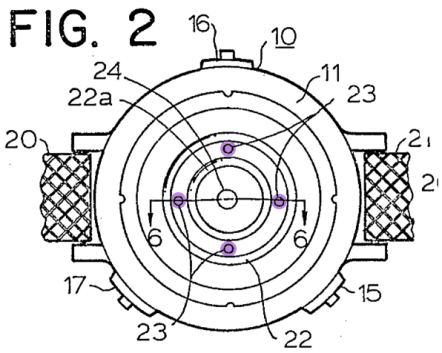

Id. at Fig. 2. A POSITA would recognize the CLT 2160 as a "can" detector and would understand that each can would be made from an opaque material, that the can also would include a lens at the end of the can near the tissue surface, and that there would be a gap between the detector and the lens, creating an opening between the detector and the lens. RX-0670 at Fig 6; RX-1221 at 1; Tr. [Warren] 1231:23-1232:9, 1234:3-8; RDX-8.70 (summarizing RX-0666, RX-0670, RX-1221). This understanding is consistent with Cramer's disclosures and figures, as well as the data sheet for the CLT 2160 referenced in Cramer's specification. RX-0670 at 5:33-35, Fig. 6; RX-1221 [CLT 2160 Data Sheet] at 1. There would thus be four detectors, arranged in a quadrant, each aligned with and positioned under an opening:

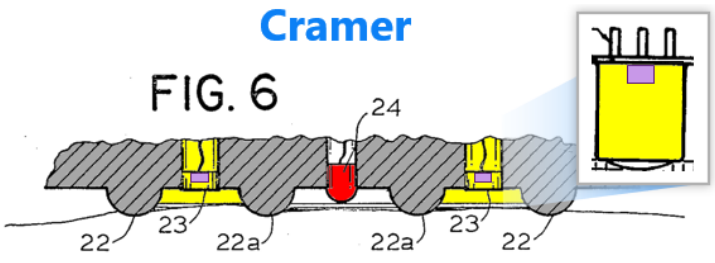

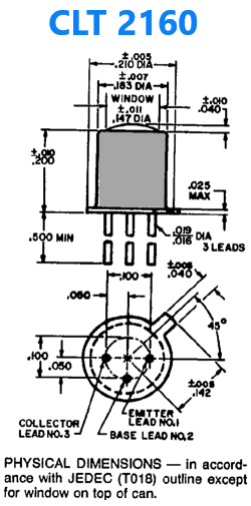

RX-0670 at Fig. 6; Tr. [Warren] 1231:23-1232:9, 1233:15-1234:8; RX-1221 at 1.

[redacted]

Cramer further discloses two layers of opaque lateral surfaces around the openings over the photodiodes. The first is formed by "[a] pair of light blocking rings integral with a lower case face isolat[ing] the photo detector form direct view from the light source and from view of the ambient light when the lower face is in contact with the wearer's body e.g. the wrist." RX-0670 at 2:46-51, 5:45-51, Fig. 6. These light blocking rings or "bosses" create an opening with opaque lateral surfaces relative to the photodiodes (23). *Id*. at 5:45-51, Fig. 6. Cramer's canned photodiodes provide "another layer" of opaque surfaces around the openings. Tr. [Warren] 1234:3-8; *see also* RX-1221. Cramer's sensor body thus has a protrusion, with the recited openings over the photodiodes, and with two layers of opaque lateral surfaces— the bosses are opaque and the walls around the cans are also opaque. *See* Tr. [Warren] 1231:15-1232:9, 1233:15-1234:8; RDX-8.70-RDX-871 (summarizing RX-670, RX-1221).

A POSITA would have understood that the use of openings over photodiodes, constructed with opaque lateral surfaces or lined with opaque materials, reduce, avoid, and substantially prevent light piping. Tr. [Warren] 1202:19-1203:9, 1211:10-1213:3, 1234:10-21. In fact, the Poeze specification attributes its purported reduction in light piping to the fact that its protrusion is made from opaque material. *E.g.*, JX-001 ['501 patent] at 7:65-8:8, 37:51-52.

A POSITA would have been motivated to combine Lumidigm's wristwatch with these teachings from Seiko 131 and Cramer because (1) Lumidigm expressly teaches that its sensor should have openings over photodiodes, made with opaque materials, to avoid light shunting and provide optical blocking (RX-0411 at 7:64-8:11) ; and (2) a POSITA would have independently looked to literature like Seiko 131 and Cramer for these elements as the benefits were well-known, and in fact, Seiko 131 and Cramer themselves state these benefits and suggest including this feature

[redacted]

in a watch. RX-0666 at Fig. 28; RX-0670 at Fig. 6; Tr. [Warren] 1234:10-21; RDX-8.71 (summarizing RX-0411, RX-0666, RX-0670).

(c) "Optically transparent material within each of the openings" ('502 claim 22 [19D]), "transmissive" or "optically transparent windows," each "extending across" a different one of the openings ('502 claim 28 [28G],'648 claim 12 [8F]), and "each through hole including a window and arranged over a different one of the last least four photodiodes" ('648 claims 24 and 30 [20D])

The use of optically transparent materials within or transmissive or transparent windows extending across openings over photodiodes also was "well-known" in the art at the time the Poeze Patents were filed and was disclosed in multiple references including, for example, Seiko 131 and Cramer. Tr. [Warren] 1221:16-12:22-9, 1193:24-1194:14; *see also* § IV.D.1.a (State of the Art), *supra*. Lumidigm itself discloses this limitation. *See* § IV.D.1.b.(3), *supra*. Moreover, a POSITA would have naturally looked to other references in the field to improve on the disclosures of Lumidigm, and Lumidigm expressly suggests such a combination including in its teaching that its sensor "incorporates an ***optical relay*** (not shown) between the sensor surface 39 and the skin 40," that this optical relay "transfers the light from the light sources onto the skin and from the skin back to the detector(s) while minimizing light loss and spreading," and that "methods of performing this function include "***fiber-optic face plates,***" "***fiber bundles***," and "other mechanisms known to one of skill in the art." RX-0411 at 8:19-26; Tr. [Warren] 1221:16-1222:25, 1235:14-1236:2.

Seiko 131 discloses these limitations. Seiko 131 describes the use of "light transmittance plate 34, which is a glass plate" over its photodiode. RX-0666 at 10:30-36. This ***glass transmittance plate 34*** may be convex, and is arranged to form a window over photodiode 32:

[redacted]

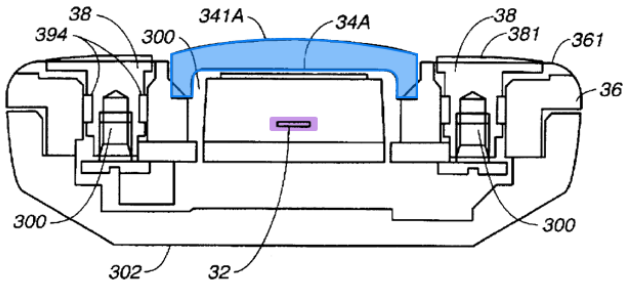

FIG._28

RX-0666 at Fig. 28, 3:22-28, 19:5-8; Tr. [Warren] 1234:22-1235:12; RDX-8.73-RDX-8.74 (summarizing RX-0666).

Cramer also discloses these limitations. As discussed above, Cramer discloses four photodiodes, and separate openings positioned and arranged over each of the four photodiodes. Cramer also discloses multiple layers of ***transparent windows or coverings*** within and extending across the openings. As referenced above, Cramer states that a "suitable detector" for its embodiments is the Clairex "CLT 2160 photo diode." RX-0670 at 5:33-35; RX-1221 at 1. A POSITA would recognize the CLT 2160 as a "can" detector and would understand that each can would include a lens at the top end of the can, that the detector would be positioned inside the can at the focal point of the lens, and that there would be a gap between the detector and the lens, creating an opening between the detector and the lens. RX-0670 at Fig 6; RX-1221 at 1; Tr. [Warren] 1231:23-1232:9, 1234:3-8, 1234:22-1235:12. Again, this understanding is consistent with Cramer's disclosures and figures as well as the data sheet for the CLT 2160 referenced in Cramer's specification. The CLT 2160 data sheet confirms that the CLT 2160 has "planar epitaxial photoresistors in a hermetically sealed TO-18 case," with a "lens" that forms a "window" at the top of the can and illustrates this with a figure.

[redacted]

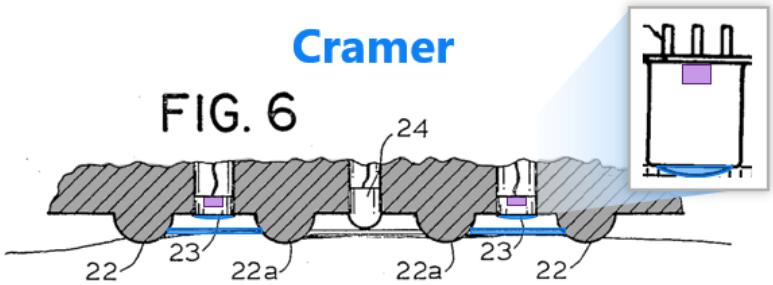

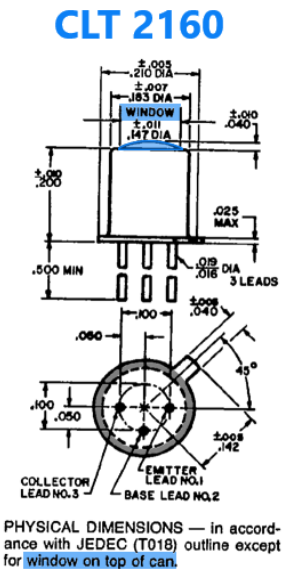

RX-0670 at Fig. 6; RX-1221 at 1; Tr. [Warren] 1231:23-1232:9, 1234:3-8, 1234:22-1235:12.

As Cramer's Figure 6 shows, in addition to the windows at the end of cans, Cramer also has a further layer of clear transparent windows between the cans and the tissue. RX-0670 at Fig. 6; Tr. [Warren] 1234:22-1235:12. Cramer thus discloses multiple types of transparent windows or coverings associated with each opening – each can would, at a minimum, have a lens at the end of the can, and there is also a further layer of clear transparent material between the can and the tissue. RX-0670 at Fig. 6; RX-1221; Tr. [Warren] 1231:23-1232:9, 1234:3-8, 1234:22-1235:12; RDX-8.73-RDX-8.74 (summarizing RX-0670, RX-1221).

A POSITA would have been motivated to combine Lumidigm's wristwatch with these teachings from Seiko 131 and Cramer because (1) Lumidigm expressly states that its sensor can include an optical relay (RX-0411 at 8:19-26) ; and (2) a POSITA would have independently looked to literature like Seiko 131 and Cramer for this element as the benefits were well-known. RX-0666 at 3:22-28, 19:5-8, Fig. 28; RX-0670 at Fig. 6; RX-1221; Tr. [Warren] 1235:14-1236:2; RDX-8.74 (summarizing RX-0411, RX-0666, RX-0670).

[redacted]

(d) "Chamfered edges" ('648 claim 30)

The use of chamfered edges also was a "well-known" in the art at the time the '648 patent was filed, had been around for "many decades," and was disclosed in multiple references including, for example, Seiko 131 and Cramer. Tr. [Warren] 1228:24-1229:10, 1236:17-1237:3; *see also* § IV.D.1.a (State of the Art), *supra*. Lumidigm itself suggests this limitation. *See* § IV.D.1.b.(6), *supra*. Moreover, a POSITA would naturally look to other references in the field to improve on the disclosures of Lumidigm, and Lumidigm expressly suggests such a combination in its teaching that its sensor head can have essentially any shape and can incorporate "ergonomic features." RX-0411 at 7:57-63; Tr. [Warren] 1228:24-1229:10, 12:36:17-1237:3.

Seiko 131 discloses this limitation. As discussed above, Seiko 131 describe a structure with a transmittance plate, with a convex surface, that conforms the tissue into a concave shape. Seiko 131 also shows chamfered edges in multiple embodiments, including on the light transmittance plate and on other portions of the watch sensor unit, for comfort purposes:

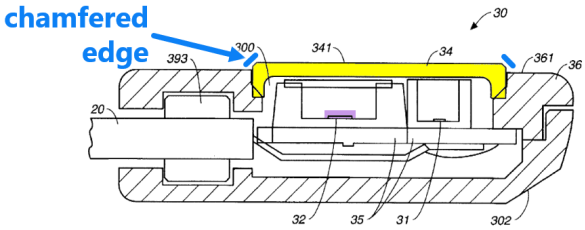

FIG._5

RX-0666 at Fig. 5. Seiko 131 explains that, when the transmittance plate is convex, this applies pressure and contact with the wrist is improved. *Id*. at 3:22-28, 19:5-8. A POSITA would have understood the advantages of the beveled/chamfered edges in Seiko 131, including to improve user comfort. Tr. [Warren] 1228:24-1229:10, 1236:3-16, 1236:17-1237:3; RDX-8.75-RDX-8.76 (summarizing RX-0666).

[redacted]

Cramer also teaches this limitation. Cramer's Figure 3 illustrates its protrusion with chamfered edges:

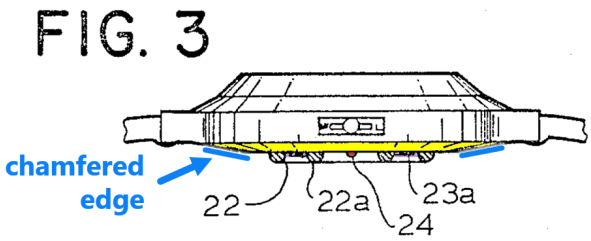

RX-0670 at Fig. 3. A POSITA would have understood the advantages of the beveled/chamfered edges in Cramer, such as improvement of user comfort. Tr. [Warren] 1228:24-1229:10, 1236:3-16, 1236:17-1237:3; RDX-8.75-RDX-8.76 (summarizing RX-0670).

A POSITA would have been motivated to combine Lumidigm's wristwatch with these teachings from Seiko 131 and Cramer because (1) Lumidigm expressly states that its sensor head can have various shapes and incorporate ergonomic features, which Professor Warren explained a POSITA would understand to include chamfered edges (RX-0411 at 7:57-63); and (2) a POSITA would have independently looked to literature like Seiko 131 and Cramer for this element as the benefits (including user comfort) were well-known, and in fact, Seiko 131 and Cramer themselves state these benefits and suggest including this feature in a watch. RX-0666 at Figs. 5 and 28; RX-0670 at Fig. 3; Tr. [Warren] 1236:17-1237:3; RDX-8.74 (summarizing RX-0411, RX-666, RX-670).

(e) Motivation to Combine and Reasonable Expectation of Success

Lumidigm expressly suggests using each feature above in subsections (a) through (d), including the recited protrusion with a convex surface, the recited openings over the photodiodes with opaque lateral surfaces and opaque materials to provide optical blocking, the recited transparent materials and windows across the openings, and the recited chamfered edges. It also

[redacted]

expressly suggests that all these features can be included in its wristwatch embodiment. RX-0411 at 11:60-12:2; *see also* Tr. [Warren] 1204:18-1206:7, 1207:23-1208:13, 1214:12-1215:4.

Additionally, each feature was a "well-known [light] management feature" and taught in many prior art references, and a POSITA would have known that the elements would form a "natural combination" and yield predictable results. Tr. [Warren] 1237:4-1238:14. A POSITA would have been further motivated to look at Cramer and Seiko 131, as each are analogous art from the same field of light-based measurement devices, and specifically, each of them was a wristwatch-based device, and a POSITA would have had a reasonable expectation of success in making the combination:

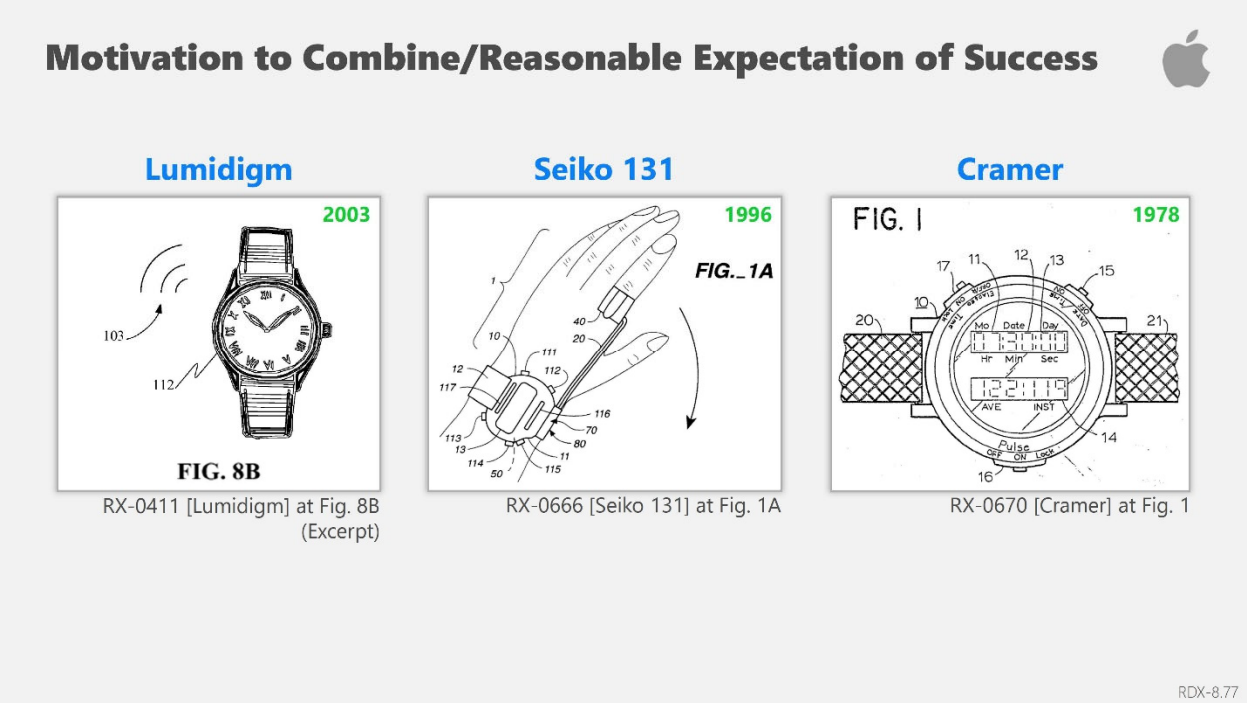

Tr. [Warren] 1237:4-1238:6; RDX-8.77 (summarizing RX-0411, RX-0666, RX-0670). Moreover, combinations like these already had been made in other prior art devices. Tr. [Warren] 1237:4-16, 1238:1-6; *see also* § IV.D.1.a (State of the Art), *supra*.

[redacted]

Seiko 131 and Cramer focused on pulse rate measurements, but A POSITA would still look to their teachings because the same light management features are employed in pulse oximetry. Tr. [Warren] 1237:17-25. It would have been obvious to a POSITA to look to light-based devices that measure various physiological parameters, including pulse rate and blood oxygen, as all make use of the same general components and techniques. Tr. [Warren] 1193:7-22, 1237:4-1238:6.

A POSITA would have known there are benefits to using a protrusion with a convex surface, including, for example, to provide better coupling and thus better measurements. Lumidigm, Seiko 131, and Cramer all disclose the benefit of having a convex protrusion in improving contact between the user tissue and surface of a sensor and in improving user comfort. RX-0411 at 7:58-63; RX-0666 at 3:22-28, 19:5-8, Fig. 28; RX-0670 at 5:45-51, Figs. 3 and 6. It was well known in the art that sensors with protrusions can improve coupling, and other references in the field included similar teachings. For example, Nippon explains that a protrusion provides a more repeatable coupling effect. RX-0665 [Nippon] at 2:57-62, 5:12-17, Fig. 3b.

A POSITA would have further understood that a convex protrusion would have been desirable to provide slight pressure on the measurement site and yield a more accurate measurement. Tr. [Warren] 1194:17-1195:5, 1211:2-8. For example, when acquiring measurements on a wrist, a POSITA would have known that a protrusion would be a sensible way to increase signal quality by pushing residual blood out of the way to increase the signal-to-noise ratio. *Id.*; *see, e.g.*, RX-0411 at 8:11-14 ("Additionally, a force sensing functionality is sometimes built into the sensor to ensure firm contact between the sensor and the skin, minimizing the amount of shunted light."); RX-0666 at 10:7-45; RX-670 at 5:16-25, Figs. 3 and 6.

A POSITA would have further recognized that the protrusion would need to have openings or windows so light can travel from the tissue to the photodiodes placed on the interior surface of

the sensor. Tr. [Warren] 1211:10-1213:3, 1225:16-1226:1. A POSITA would have understood the benefits of using openings with opaque lateral surfaces or lined with opaque material, as disclosed in Lumidigm, Seiko 131, and Cramer, so that ambient light and other forms of optical noise would not reach the photodiodes. *Id.* at 1192:25-1193:22, 1203:6-9, 1211:10-1213:3, 1233:15-1234:8; RX-0411 at 8:2-7. A POSITA would have also understood that the advantages include reducing, avoiding, and substantially preventing light piping. *Id.* These concepts were well-known in the art. RX-0411 at 8:1-10, 8:10-11 ("Other equivalent means of optical blocking can be readily established by one of ordinary skill in the art."); Tr. [Warren] 1192:25-1193:22, 1203:6-9, 1212:4-1213:3.

For example, Lumidigm itself teaches that photodiodes should be recessed in openings with "optically opaque material" to "minimize [] the amount of light that can be detected after reflecting off the first (epidermal) surface" and for "optical blocking" to reduce "shunted" light (i.e., light piping). RX-0411 at 8:1-11, Fig. 2; Tr. [Warren] 1211:10-1212:3. Professor Warren's own student devices, including Kansas State 6D, confirm that even undergraduate students understood that physiological sensors should include openings over the photodiodes with walls made of opaque material to reduce light mixing. RX-0515; RX-0508 at Fig. 11; RX-504 at 1 (describing the "[o]timized [d]esign" of K-State 6D as "[l]ess susceptible to ambient noise due to opaque material and flexible design"); RPX-6; Tr. [Warren] 1200:4-15. Cramer similarly teaches the use of opaque walls surrounding the photodiodes to "isolate the photo detector from direct view from the light source and from the view of the ambient light when the lower face is in contact with the wearer's body e.g. the wrist" (*e.g.*, RX- 0670 at 2:46-51) and to "prevent[] direct transmission of light between source 24 and detectors 23 (*e.g.*, *id*. at 5:44-48, Figs. 3 and 6). *See* Tr. [Warren] 1233:15-1234:2.

The textbook *Design of Pulse Oximeters* by J G Webster (IOP Publishing Ltd., 1997) ("Webster"), which Complainants' own expert recognized as an authority on pulse oximetry components and design, also discloses the importance of using opaque materials to minimize ambient light reaching the photodiodes. RX-0035 [Webster] at 111, 201-202, Fig. 3.10; DocID 761612 [Ex. 2, Madisetti Rebuttal Claim Construction Report] at ¶ 9 (describing Webster as "a comprehensive textbook on pulse oximetry"). Webster also provides solutions that minimize ambient light including careful placement of LEDs and photodiodes and the use of light impervious barriers. RX-0035 at 96. Webster specifically recommends that oximeter probes should be manufactured of "black opaque material that does not transmit light, or enclosed in an opaque plastic housing to reduce the possibility of false readings. RX-0035 at 202.

A POSITA would further have recognized that the use of optically transparent material within openings associated with photodiodes, or transmissive windows extending across the openings, would have provided additional benefits including by transferring and directing light and by protecting the photodiodes from damage or interference caused by contaminants, such as hair, sweat/liquid, dirt, debris, etc. Tr. [Warren] 1193:24-1194:7, 1221:16-1222:16. Again, these benefits were also taught by other art in the field. For example, Webster describes a "can package" for a photodiode that seals the photodiode and creates a window for light to pass to the photodiode. RX-0035 at 94, Fig. 6.5(a), *see also* 250, Fig. 3.10, Fig. 6.6, Fig. 13.12. And Haar discloses that closing the contact surface of the measuring head provides protection for the components within. RX-0667 [Haar] at 3:21-23.

A POSITA also would have been motivated to incorporate chamfered edges, for multiple reasons—including, for example, for user comfort and increased sensor contact—and would have had a reasonable expectation of success in doing so. Tr. [Warren] 1228:24-1229:10, 1236:3-

[redacted]

1238:6. Further, A POSITA would have understood that a convex protrusion could have a beveled edge, and that it would provide the expected benefit of minimizing discomfort when a wearable device is pressed against the skin. Tr. [Warren] 1228:24-1229:10, 1236:3-1238:6.

A POSITA would appreciate that all elements discussed above could be combined together in the same device, and would have had a reasonable expectation of success in doing so. Tr. [Warren] 1237:4-1238:6; RDX-8.77 (summarizing RX-0411, RX-0666, RX-0670). A POSITA would have recognized that combining Lumidigm's wristwatch with Seiko 131's and Cramer's wrist-worn teachings would have amounted to nothing more than the use of known techniques to improve similar devices in the same way and that combining the prior art elements according to known methods would yield predictable results. *Id.*

A POSITA would have been motivated to combine Lumidigm with Seiko 131 and Cramer's teachings because the existence, function, and advantages of the recited elements, all basic "light management features," were widely known and had been used in the field for similar light-based physiological sensors before the priority date, including as disclosed in the prior art references relied on above and numerous others. Tr. [Warren] 1237:4-1238:6; *see also* Tr. [Warren] 1189:12-1195:22, 1200:2-15, 1203:6-9. A POSITA would have been able to mix and match these elements in any number of permutations—including the specific combinations recited by the claims—and would have expected predictable and successful results because similar combinations had "already been done in various forms." *Id.* at 1191:7-22, 1237:4-1238:6. In all cases, the combinations would be nothing more than use of familiar elements in accordance with known methods. *Id.* at 1237:4-1238:6; *see also* Tr. [Warren] 1189:12-1195:22, 1200:2-15, 1203:6-9.

(2) Lumidigm in View of Webster Render Obvious '502 Claim 22

[redacted]

As referenced above, claim 22 of the '502 patent includes limitations relating to a thermistor (limitation [20]) and a processor to adjust operations based on signals from the thermistor (limitation [21]). For the reasons stated above, Lumidigm alone anticipates or renders obvious claim 22. Alternatively, Lumidigm in combination with Webster renders claim 22 obvious.

Complainants' expert, Dr. Madisetti, has relied on Webster as a leading publication in the field and one with which a POSITA would be familiar. DocID 761612 [Ex. 2, Madisetti Rebuttal Claim Construction Report] at ¶ 9 (describing Webster as "a comprehensive textbook on pulse oximetry"). Professor Warren has had his own personal copy for 20 years. Tr. [Warren] 1239:3-8. A POSITA would have been motivated to modify Lumidigm's wristwatch based on Webster's relevant teachings, and would have had a reasonable expectation of success in doing so. Tr. [Warren] 1238:18-23, 1239:18-1240:3.

(a) A "thermistor" and "one or more processors . . . configured to receive a temperature signal from the thermistor and adjust operation of the user-worn device responsive to the temperature signal" ('502 claim 22)

The use of thermistors to output temperature signals and processors to receive those signals and adjust operation based on the signals was well known in the art at the time the Poeze Patents were filed and was disclosed in multiple references including, for example, Webster. Tr. [Warren] 1238:18-23. A POSITA would have been familiar with the "well-known notion" that "LEDs will change their behavior depending on temperature." *Id.* at 1223:1-20. A POSITA would have further realized that a thermistor could be used to monitor temperature, and that signals from the thermistor could be used to adjust the calibration of the system, and would have naturally looked to Webster to improve on the disclosures of Lumidigm. Tr. [Warren] 1223:1-20, 1238:15-1240:3; *see also*

[redacted]

Tr. [Sarrafzadeh] 1053:9-1056:23, 1060:2-1062:8. Lumidigm expressly suggests such a combination including in its teaching of "***performing explicit corrections to account for*** sensor-to-sensor variations or ***environmental influences of temperature***" and that "[t]hese and other techniques are ***well known in the art***." RX-0411 at 14:21-29.

Webster discloses claim 22 limitations [20] and [21] (i.e., incorporated claims 20 and 21). Webster recognizes that temperature changes affect the operation of an LED and that a temperature sensor can compensate for LED temperature changes. RX-0035 at 85. Webster describes how the "temperature information" is fed into the microprocessor and used by the microprocessor to choose calibration curves to match LED wavelengths. *Id.* Webster also recognizes that a thermistor can be used to measure temperature, and includes an example of a sensor with a thermistor for measuring oxygenation:

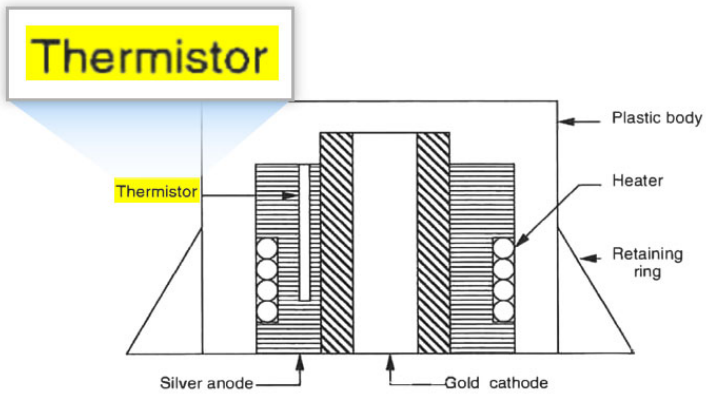

Figure 3.4 A cross section of a transcutaneous PO_2 electrode. The electrolyte below the anode and cathode is held in place by a polypropylene membrane.

Id. at Fig. 3.4; Tr. [Warren] 1238:24-1239:17; RDX-8.80-RDX-8.81 (summarizing RX-0035).

A POSITA would have been motivated to combine Lumidigm's wristwatch with these teachings from Webster because (1) Lumidigm expressly states that the sensor can perform explicit corrections to account for temperature (RX-0411 at 14:21-29); and (2) a POSITA would have independently looked to literature like Webster for this element as the benefits were well-known,

[redacted]

and in fact, Webster itself states these benefits and suggest including this feature in a physiological measurement device. RX-0035 at 85, Fig. 3.4; Tr. [Warren] 1238:15-1239:8, 1239:18-1240:3, *see also* 1223:1-20; RDX-8.81 (summarizing RX-0411, RX-0035).

(b) Motivation to Combine and Reasonable Expectation of Success

As referenced above, Lumidigm expressly suggests "performing explicit corrections" to account for "environmental influences of temperature" and confirms that "these and other techniques are well known in the art." *E.g.*, RX-0411 at 14:21-29. It also expressly suggests that these features can be included in its wristwatch embodiment. *Id.* at 11:60-12:2. Additionally, thermistors and processors to adjust operations based on temperature signals from a thermistor were well known and taught in many prior art references, and a POSITA would have known that the elements could have been combined with Lumidigm to yield predictable results. Tr. [Warren] 1238:15-1240:3, *see also* 1223:1-20. A POSITA would have been motivated to use Webster, a leading treatise from the same field of light-based measurement devices. Tr. [Warren] 1238:24-1239:8.

A POSITA would have known that a thermistor would be used to take a temperature measurement of the device and adjust operations and that making corrections in response to a temperature signal would ensure more accurate physiologic measurement. Tr. [Warren] 1238:15-1239:8, *see also* 1223:1-20. A POSITA would have understood the use of a thermistor to compensate for temperature variations in the LEDs during operation of the sensor was well known. *Id.* A POSITA would have had a reasonable expectation of success when using a thermistor to take a temperature measurement and then adjusting operation based on the temperature measurement to achieve a more reliable measurement. *E.g.*, RX-0411 at 14:21-29; RX-0035 at 85, Fig. 3.4; RX-0489 [McCarthy] at 3:24-33; Tr. [Warren] 1238:15-1240:3, *see also* 1223:1-20.

The combination of Lumidigm's wristwatch with Webster's teachings is nothing more than the use of a known technique to improve a similar device in the same way and this combination would yield predictable results. *See* Tr. [Warren] 1238:15-1240:3. Again, the references are in the same field of endeavor and the combination would be used together based on sound engineering principles. *Id.*

(3) Lumidigm in view of Seiko 131, Cramer, and Webster Render Obvious Claim 22

In addition to combining Lumidigm with Webster ***alone*** for purposes of '502 claim 22 (as discussed above), it also would have been obvious to combine Lumidigm with Seiko 131, Cramer and Webster. Seiko 131 and Cramer teach the recited protrusion with a convex surface, openings lined with opaque material, and optically transparent material within the openings [limitations [C] and [D]), and Webster teaches the recited thermistor and processor to adjust operations (limitations [20] and [21]). A POSITA would have been motivated to modify Lumidigm's wristwatch based on these teachings of Seiko 131, Cramer, and Webster and would have had a reasonable expectation of success in doing so.

(a) "Protrusion comprising a convex surface" ('502 claim 22, limitation [19C] from which claim 22 depends)

The use of a protrusion with a convex surface was well known in the art at the time the Poeze Patents were filed and was disclosed in multiple references including, for example, Seiko 131 and Cramer. A POSITA would naturally look to these other devices to improve on the disclosures of Lumidigm, and Lumidigm expressly suggests such a combination. RX-0411 at 7:58-63; Tr. [Warren] 1233:1-14; RDX-8.68 (summarizing RX-0411, RX-0666, RX-0670).

[redacted]

As discussed in Section IV.D.1.c.(1)(a), *supra*, Seiko 131 and Cramer both disclose this limitation. *E.g.*, RX-0666 at 3:22-28, 19:5-8, Fig. 28; RX-0670 at 5:45-51, Figs. 3 and 6; Tr. [Warren] 1232:15-1233:14; RDX-8.66-RDX-8.68 (summarizing RX-0411, RX-0666, RX-0670).

(b) "Separate openings extending through the protrusion and lined with opaque material, each opening positioned over a different one of the four photodiodes" and "the opaque material configured to reduce an amount of light reaching the photodiodes without being attenuated by the tissue ('502 claim 22, limitation [19C] from which claim 22 depends)

The use of openings positioned over photodiodes, including openings lined with opaque material to reduce unattenuated light, was well known in the art at the time the Poeze Patents were filed and was disclosed in multiple references including, for example, Seiko 131 and Cramer. A POSITA would naturally look to these other devices to improve on the disclosures of Lumidigm, and Lumidigm expressly suggests such a combination. RX-0411 at 8:1-11; Tr. [Warren] 1234:10-21; RDX-8.71 (summarizing RX-0411, RX-0666, RX-0670).

As discussed in Section IV.D.1.c.(1)(b), *supra*, Seiko 131 and Cramer both disclose this limitation. *E.g.*, RX-0666 at Fig. 28; RX-0670 at 5:33-35, Fig. 6; RX-1221 at 1; Tr. [Warren] 1233:15-1234:21; RDX-8.69-RDX-8.71 (summarizing RX-0411, RX-0666, RX-0670).

(c) "Optically transparent material within each of the openings" ('502 claim 22, limitation [19C] from which claim 22 depends)

The use of optically transparent materials within the openings over photodiodes was well known in the art at the time the Poeze Patents were filed and was disclosed in multiple references including, *e.g.*, Seiko 131, Cramer and Webster. A POSITA would naturally look to these other devices to improve on the disclosures of Lumidigm, and Lumidigm expressly suggests such a

[redacted]

combination. RX-0411 at 8:19-26; Tr. [Warren] 1235:14-1236:2; RDX-8.74 (summarizing RX-0411, RX-0666, RX-0670, RX-1221).

As discussed in Section IV.D.1.c.(1)(c), *supra*, Seiko 131 and Cramer disclose these limitations. *E.g.*, RX-0666 at Fig. 28; RX-0670 at Fig. 6; RX-1221 at 1; Tr. [Warren] 1234:22-1236:2; RDX-8.72-RDX-8.74 (summarizing RX-0411, RX-0666, RX-0670, RX-1221).

(d) A "thermistor" and "one or more processors further configured to receive a temperature signal from the thermistor and adjust operation of the user-worn device responsive to the temperature signal" (502 claim 22, claims 20 and 21, from which claim 22 depends)

The use of thermistors to output temperature signals and processors to adjust operation based on signals from thermistors was well known in the art at the time the Poeze Patents were filed and was disclosed in multiple references including, for example, Webster. A POSITA would naturally look to Webster to improve on the disclosures of Lumidigm. Lumidigm expressly suggests such a combination including in its teaching of "performing explicit corrections to account for sensor-to-sensor variations or environmental influences of temperature" and that "[t]hese and other techniques are well known in the art." RX-0411 at 14:21-29, Fig. 9; Tr. [Warren] 1238:15-23, 1239:18-1240:3; RDX-8.81 (summarizing RX-0035, RX-0411).

As discussed in Section IV.D.1.c.(2), *supra*, Webster discloses these limitations. RX-0035 at 85, Fig. 3.4; Tr. [Warren] 1238:15-1240:3; RDX-8.79-RDX-8.81 (summarizing RX-0035, RX-0411).

(e) Motivation to Combine and Reasonable Expectation of Success

Lumidigm expressly suggests using each feature above in subsections (a) through (d), including the recited protrusion with a convex surface, openings over the photodiodes lined with

[redacted]

opaque material, transparent material within the openings, a thermistor, and processors to adjust operations based on signals from the thermistor. Lumidigm also expressly suggests that these all these features can be included in its wristwatch embodiment. RX-0411 at 11:60-12:2; *see also* Tr. [Warren] 1204:18-1206:7, 1208:1-13, 1214:12-1215:4; Tr. [Rowe] at 1152:4-24.

As described in Sections IV.D.1.c.(1)(a)-(e), *supra*, a POSITA would have been motivated combine Lumidigm with Cramer, Seiko 131, as all are analogous art from the same field of light-based measurement devices, and would have had a reasonable expectation of success in doing so. A POSITA would have recognized the benefits of using a protrusion with a convex surface, the benefits of incorporating openings lined with opaque material over the photodiodes, and the benefits of including optically transparent material within each opening. Tr. [Warren] 1232:10-1236:2, 1237:4-1238:6, *see also* 1192:25-1195:22, 1210:13-1213:3.

Further, as described in Section IV.D.1.c.(2)(b), *supra*, a POSITA also would have been motivated to combine Lumidigm and Webster, as each is also from the same field of light-based measurement devices, and would have had a reasonable expectation of success in doing so. A POSITA also would have recognized the benefits of using a thermistor and a processor to compensate for temperature variations. Tr. [Warren] 1238:15-1240:3, *see also* 1223:1-20.

It would have been obvious to combine Lumidigm's wristwatch with Cramer's, Seiko 131's, and Webster's teachings for the same reasons, specifically combining the teachings would have amounted to nothing more than the use of a known technique to improve similar devices in the same way and the combining of prior art elements according to known methods to yield predictable results. As Professor Warren explained, "the three elements for the watch [i.e., Lumidigm, Seiko 131, and Cramer] all go together. It would be obvious then, as a person of ordinary skill in the art, to add the thermal sensing." Tr. [Warren] 1241:20-1242:9.

[redacted]

A POSITA would have been motivated to combine the teachings of Seiko 131, Cramer, and Webster, and to apply the combined teachings to Lumidigm's wristwatch. *Id.* A POSITA would recognize the various components of the device, including the protrusion with a convex surface, openings over the photodiodes lined with opaque material, thermistor, and processors to adjust operations based on signals from the thermistor above, could be used together and modified in accordance with good engineering principles and that a POSITA would have a reasonable expectation of success in making the modifications describe above and suggested in the references. *Id.* Lumidigm, Seiko 131, Cramer, and Webster are from the same field of endeavor and a POSITA would look to these types of references when considering design alternatives. Moreover, each feature and limitation in the claim has a known function and performs in the manner a POSITA would expect it to operate. This is equally true when multiple components of a design are brought together: each feature and component performs its known function in a known way and produces an expected result.

(4) Lumidigm in View of Webster and Apple '047 Render Obvious '502 claim 28

As referenced above, claim 28 of the '502 patent includes limitations reciting both a thermistor (limitation [28D]) and a user interface with a touch-screen display (limitation [28K]). For the reasons stated above, Lumidigm alone anticipates or renders obvious claim 28. In the alternative, Lumidigm in combination with Webster and Apple '047 render obvious claim 28.

U.S. Patent No. 9,001,047 ("Apple '047"), titled "Modal Change Based on Orientation of a Portable Multifunction Device," was filed January 4, 2008, issued April 7, 2015, and discloses a portable multifunction device with a touch screen user interface with modal and orientation change capability. RX-0673 [Apple '047] at Abstract. A POSITA would have been motivated to modify

Lumidigm based on the relevant teachings of Webster and Apple '047 and would have had a reasonable expectation of success in doing so.

(a) A "thermistor configured to provide a temperature signal" and, "the one or more processors further configured to receive the temperature signal" ('502 claim 28, limitations [28D] and [28I])

As discussed in Section IV.D.1.c.(2), *supra*, in connection with '502 claims 20 and 21, the use of thermistors to output temperature signals and processors to receive those signals was well known in the art at the time the Poeze Patents were filed and was disclosed in multiple references including, for example, Webster. Tr. [Warren] 1238:18-23. A POSITA would naturally look to Webster to improve on the disclosures of Lumidigm, and Lumidigm expressly suggests such a combination including in its discussion of "making corrections" based on temperature. RX-0411 at 14:21-29, Fig. 9; Tr. [Warren] 1223:1-20.

As discussed in Section IV.D.1.c.(2), *supra*, Webster discloses these limitations. RX-0035 at 85, Fig. 3.4; Tr. [Warren] 1238:15-1240:3; RDX-8.80 (summarizing RX-0035).

(b) A "user interface comprising a touch screen display, wherein the user interface is configured to display indicia responsive to the oxygen saturation of the user" ('502 claim 28, limitation [28K])

The use of user interfaces with touch screen displays also was well known in the art at the time the Poeze Patents were filed and was disclosed in multiple references including, for example, Apple '047. A POSITA would have naturally looked to Apple '047 to improve on the disclosures of Lumidigm. Tr. [Warren] 1241:1-17. Lumidigm expressly suggests such a combination including in its teaching of a cellular telephone/PDA embodiment. RX-0411 at Figs. 8D-8E; RDX-8.47 (summarizing RX-0411). A POSITA would readily appreciate that Lumidigm's

[redacted]

wristwatch embodiment could also include a touch screen interface. RX-0411 at 3:35-37, 12:3-41, 12:56-63; Tr. [Warren] 1226:23-1227:7; RDX-8.47 (summarizing RX-0411).

By the time of the priority date of the Poeze Patents, Apple and others had already popularized the use of user interfaces with touch screens. *See* Tr. [Land] 955:10-956:4; Tr. [Warren] 1240:4-17. A POSITA would have been motivated to combine Lumidigm with Apple '047, including its teachings of the recited "network interface" for wireless communications to mobile phones, "touch screen," and memory, and would have had a reasonable expectation of success in doing so. Tr. [Warren] 1241:1-17.

Apple '047 discloses the use of a touch screen display. The disclosed touch screen display has a portrait view and a landscape view and the view between portrait view and landscape view changes based on the orientation of the display. RX-0673 [Apple '047] at 3:17-20. Apple '047 also describes a touch sensitive display or touch screen: "FIGS. 1A and 1B are block diagrams illustrating portable multifunction devices 100 with touch-sensitive displays 112 in accordance with some embodiments. The touch-sensitive display 112 is sometimes called a 'touch screen' for convenience and may also be known as or called a touch-sensitive display system." *Id*. at 5:65-6:3; Tr. [Warren] 1240:4-25; RDX-8.83 (summarizing RX-0673).

[redacted]

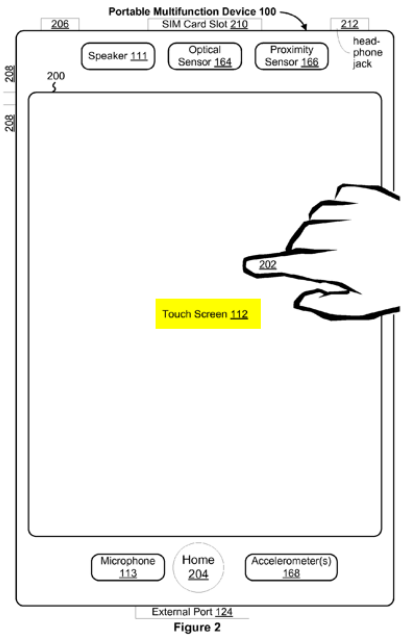

RX-0673 [Apple '047] at Fig. 2.

Apple '047 also describes the function of the touch screen where the "touch screen" has a touch sensitive surface that accepts input from a user based on tactile contact. A POSITA would have understood that the touch screen and the other elements disclosed by Apple '047 could have readily been combined with Lumidigm and would have yielded predictable results in doing so. Tr. [Warren] 1226:23-1227:7, 1240:4-1241:14; RDX-8.84 (summarizing RX-0411, RX-0035, RX-0673).

A POSITA would have been motivated to combine Lumidigm's wristwatch with these teachings from Apple '047 because (1) Lumidigm expressly discloses touch screen displays, including to display indicia responsive to a user's oxygen saturation (RX-0411 at Figs. 8B-8E, 3:35-37, 21:29-36); and (2) a POSITA would have independently looked to literature like Apple '047 for this element as the benefits were well-known and in fact, Apple '047 states these benefits and suggests including this feature. RX-0673 at 5:64-6:3, Fig. 2; Tr. [Warren] 1226:23-1227:3,

[redacted]

1240:4-1242:9; RDX-8.83-RDX-8.85 (summarizing RX-0035, RX-0411, RX-0666, RX-0670, RX-0673).

(c) Motivation to Combine and Reasonable Expectation of Success

Lumidigm expressly suggests using each feature above in subsections (a) and (b), including a thermistor configured to provide a temperature signal, processors configured to receive the temperature signal, and a user interface with a touch screen display configured to display indicia responsive to an oxygen saturation measurement of a user. It also expressly suggests that all these features can be included in its wristwatch embodiment. RX-0411 at 11:60-12:2. Additionally, each element was well known and taught in many prior art references, and a POSITA would have known that the elements could have been combined to yield predictable results. Tr. [Warren] 1223:1-20, 1226:23-1227:7, 1238:15-1241:17. A POSITA would have been motivated to look at Webster and Apple '047 as each are analogous art from the same field of light-based measurement devices. *Id.*

As discussed in Section IV.D.1.c.(2), *supra*, a POSITA would have been motivated to combine Lumidigm and Webster and would have had a reasonable expectation of success in doing so. A POSITA also would have recognized the benefits of incorporating temperature measurement using a thermistor and would have recognized that temperature sensing with a thermistor was a well-known mechanism for making corrections based on temperature. Tr. [Warren] 1238:15-1239:8, *see also* 1223:1-20.

A POSITA would also have found it obvious to use a touch screen display as a user interface as disclosed in Apple '047 with the physiologic measuring device described in Lumidigm. Tr. [Warren] 1241:1-17. Specifically, a POSITA would have known of the widespread availability of touch screens as user interfaces. *Id*. at 1226:23-1227:3, 1240:4-17.

[redacted]

Such an application of known touch screen technology that has a known usefulness would have been implemented in a predictable manner with an expected result in a device for measuring a physiologic parameter. *Id.* at 1226:23-1227:3, 1240:4-17, 1241:1-17.

Apple filed its first patent applications on touch screen technology long before the filing of the Asserted Poeze Patents, and Apple has been at the forefront of developing and promoting touch screen technology. It would have been obvious to combine these teachings and other teachings of touch screens, including for example, RX-0035 at 114, 137, and 218-223 and RX-0673 [Apple '047], because the combination would have provided an improved user experience and lower costs, and a POSITA would have had a reasonable expectation of success in doing so. *See* Tr. [Warren] 1241:1-17.

A POSITA would have also known that touch screens would be a suitable way to display indicia responsive to the measurement of the physiologic parameter. Touch screens were well known and used in a variety of personal devices including cell phones (*e.g.*, iPhone in 2007). A POSITA would have further understood that touch screens could be used on user-worn devices, like watches. RX-0411 at 11:60-12:2; *see also* Tr. [Warren] 1226:23-1227:7, *see also* 1204:18-1206:7, 1208:1-13, 1214:12-1215:4; Tr. [Rowe] at 1152:4-24.

A POSITA would have had a reasonable expectation of success when using a touch screen to display indica responsive to a measurement of a physiologic parameter on a user-worn device. Additionally, a POSITA would understand that the display of a physiologic parameter on a touch screen of a user-worn device would have been sensible to achieve the form/function desired in the device.

A POSITA would have combined the teachings of Lumidigm, Webster, and Apple '047 as doing so would have amounted to nothing more than the use of a known technique to improve

similar devices in the same way and the combining of prior art elements according to known methods to yield predictable results. Tr. [Warren] 1226:23-1227:7, 1238:15-1241:17; RDX-8.84 (summarizing RX-0035, RX-0411, RX-0673). A POSITA would be motivated to combine the teachings of Webster and Apple '047 and to apply teachings to Lumidigm. *Id.* A POSITA would recognize that various components of the device such as thermistors and touch screens could be used together and modified in accordance with good engineering principles and that a POSITA would have a reasonable expectation of success in making the modifications describe above and suggested in the references. *Id.* Moreover, each feature and limitation in the claim has a known function and performs in the manner a POSITA would expect it to operate. *Id.* This is equally true when multiple components of a design are brought together: each feature and component performs its known function in a known way and produces an expected result. *Id.*

(5) Lumidigm in View of Seiko 131, Cramer, Webster, and Apple '047 Render Obvious '502 Claim 28

In addition to combining Lumidigm with Webster and Apple '047 ***alone*** for purposes of '502 claim 28, it also would have been obvious to combine Lumidigm with Seiko 131, Cramer, Webster, and Apple '047. Seiko 131 and Cramer teach the recited protrusion with a convex surface, openings defined by opaque surfaces, and transmissive windows ([limitations [28E], [28F], [28G]), Webster teaches the recited thermistor (limitation [28D]), and Apple '047 teaches the recited user interface with a touch screen (limitation [28K]). A POSITA would have been motivated to modify Lumidigm's wristwatch based on the relevant teachings of Seiko 131, Cramer, Webster, and Apple '047, and would have had a reasonable expectation of success in doing so. Tr. [Warren] 1241:18-1242:9; RDX-8.85 (summarizing RX-0035, RX-0411, RX-0666, RX-0670, RX-0673).

[redacted]

(a) "Protrusion comprising a convex surface" ('502 claim 28, limitation [28E])

The use of a protrusion with a convex surface was well known in the art at the time the Poeze Patents were filed and was disclosed in multiple references including, for example, Seiko 131 and Cramer. *E.g.*, RX-0411 at 7:58-63; Tr. [Warren] 1233:1-14; RDX-8.68 (summarizing RX-0411, RX-0666, RX-0670).

As discussed in Section IV.D.1.c.(1)(a), *supra*, Seiko 131 and Cramer both disclose this limitation. *E.g.*, RX-0666 at 3:22-28, 19:5-8, Fig. 28; RX-0670 at 5:45-51, Figs. 3 and 6; Tr. [Warren] 1232:15-1233:14; RDX-8.66-RDX-8.68 (summarizing RX-0411, RX-0666, RX-0670).

(b) A "plurality of openings in the convex surface, extending through the protrusion and aligned with the four photodiodes, each opening defined by an opaque surface configured to reduce light piping" ('502 claim 28, limitation [28F])

The use of openings through a convex protrusion and aligned over photodiodes where the openings are defined by an opaque surface to reduce light piping was well known in the art at the time the Poeze Patents were filed and was disclosed in multiple references including, for example, Seiko 131 and Cramer. A POSITA would naturally look to these other devices to improve on the disclosures of Lumidigm, and Lumidigm expressly suggests such a combination. RX-0411 at 8:1-11; Tr. [Warren] 1234:9-21; RDX-8.71 (summarizing RX-0411, RX-0666, RX-0670).

As discussed in Section IV.D.1.c.(1)(b), *supra*, Seiko 131 and Cramer both disclose this limitation. *E.g.*, RX-0666 at Fig. 28; RX-0670 at 5:33-35, Fig. 6; RX-1221 at 1; Tr. [Warren] 1233:15-1234:21; RDX-8.69-RDX-8.71 (summarizing RX-0411, RX-0666, RX-0670).

[redacted]

(c) A "plurality of transmissive windows, each of the transmissive windows extending across a different one of the openings" ('502 claim 28, limitation [28G])

The use of transmissive windows extending across openings over photodiodes was well known in the art at the time the Poeze Patents were filed and was disclosed in multiple references including, for example, Seiko 131 and Cramer. A POSITA would naturally look to these other devices to improve on the disclosures of Lumidigm, and Lumidigm expressly suggests such a combination. RX-0411 at 8:19-26; Tr. [Warren] 1235:13-1236:2; RDX-8.74 (summarizing RX-0411, RX-0666, RX-0670, RX-1221).

As discussed in Section IV.D.1.c.(1)(c), *supra*, Seiko 131 and Cramer disclose this limitation. *E.g.*, RX-0666 at Fig. 28; RX-0670 at Fig. 6; RX-1221 at 1; Tr. [Warren] 1234:22-1236:2; RDX-8.72-RDX-8.74 (summarizing RX-0411, RX-0666, RX-0670, RX-1221).

(d) A "thermistor configured to provide a temperature signal" and, "the one or more processors further configured to receive the temperature signal" (502 claim 28, limitations [28D] and [28I])

The use of thermistors to output temperature signals and processors to adjust operation based on signals from thermistors was well known in the art at the time the Poeze Patents were filed and was disclosed in multiple references including, for example, Webster. A POSITA would naturally look to Webster to improve on the disclosures of Lumidigm, and Lumidigm expressly suggests such a combination. RX-0411 at 14:21-29, Fig. 9; Tr. [Warren] 1223:1-20.

As discussed in Section IV.D.1.c.(2), *supra*, Webster discloses these limitations. RX-0035 at 85, Fig. 3.4; Tr. [Warren] 1238:15-1240:3; RDX-8.80 (summarizing RX-0035).

[redacted]

(e) A "user interface comprising a touch screen display, wherein the user interface is configured to display indicia responsive to the oxygen saturation of the user" ('502 claim 28, limitation[28K])

The use of user interfaces with touch screen displays also was well known in the art at the time the Poeze Patents were filed and was disclosed in multiple references including, for example, Apple '047. A POSITA would naturally look to these other devices to improve on the disclosures of Lumidigm, and Lumidigm expressly suggests such a combination. RX-0411 at Figs. 8D-8E' Tr. [Warren] 1226:23-1227:7, 1240:4-1241:17; RDX-8.47 (summarizing RX-0411).

As discussed in Section IV.D.1.c.(4), *supra*, Apple '047 discloses this limitation. RX-0673 [Apple '047] at 5:64-6:3, Fig. 2; Tr. [Warren] 1240:4-25; RDX-8.83 (summarizing RX-0673).

(f) Motivation to Combine and Reasonable Expectation of Success

Lumidigm expressly suggests using each feature above, including the recited protrusion with a convex surface, openings defined by an opaque surface to reduce light piping, transmissive windows, thermistor, and a user interface with a touch screen display. It also expressly suggests that all these features can be included in its wristwatch embodiment. RX-0411 at 11:60-12:2. Additionally, each element was well known and taught in many prior art references, and a POSITA would have known that the elements could have been combined to yield predictable results. Tr. [Warren] 1226:23-1227:7, 1232:10-1236:2, 1237:4-1242:9, *see also* 1192:25-1195:22, 1203:6-9, 1210:13-1213:3. A POSITA would have been motivated to look at Cramer, Seiko 131, Webster, and Apple '047 as each is analogous art from the same field of light-based measurement devices. *Id.* It would have been obvious to a POSITA to look to devices that measure physiological parameters, e.g., pulse rate and blood oxygen, as all make use of the same general components and techniques. *Id.*

[redacted]

As discussed in Section IV.D.1.c.(3), *supra*, a POSITA would have been motivated to combine the teachings of Lumidigm with Seiko 131, Cramer, and Webster, and would have had a reasonable expectation of success in doing so. A POSITA also would have recognized the benefits of using a protrusion with a convex surface, the benefits of incorporating openings over the photodiodes with opaque surfaces to reduce light piping, the benefits of including transmissive windows over the openings, and the benefits of including a thermistor to provide a temperature signal and processors to receive and use that signal. *See* Tr. [Warren] 1232:10-1240:3, *see also* 1192:25-1195:22, 1210:13-1213:3.

Additionally, as discussed in Section IV.D.1.c.(4), *supra*, a POSITA also would have been motivated to combine Lumidigm with Webster and Apple '047, and would have had a reasonable expectation of success in doing so. A POSITA also would have recognized the benefits of using a user interface with a touch screen display configured to display indicia responsive to an oxygen saturation measurement of a user. *See* Tr. [Warren] 1226:23-1227:7, 1240:4-1242:9.

It would have been obvious to combine the teachings of Seiko 131, Cramer, Webster, and Apple '047, and apply those combined teachings to Lumidigm's wristwatch, for the same reasons, as combining the teachings would have amounted to nothing more than the use of a known technique to improve similar devices in the same way and the combining of prior art elements according to known methods to yield predictable results. Tr. [Warren] 1226:23-1227:7, 1232:10-1236:2, 1237:4-1242:9. Again, "the three elements for the watch [i.e., Lumidigm, Seiko 131, and Cramer] all go together. It would be obvious then, as a person of ordinary skill in the art, to add the thermal sensing and the touchscreen elements via Webster or Apple or any number of other references to accomplish this":

[redacted]

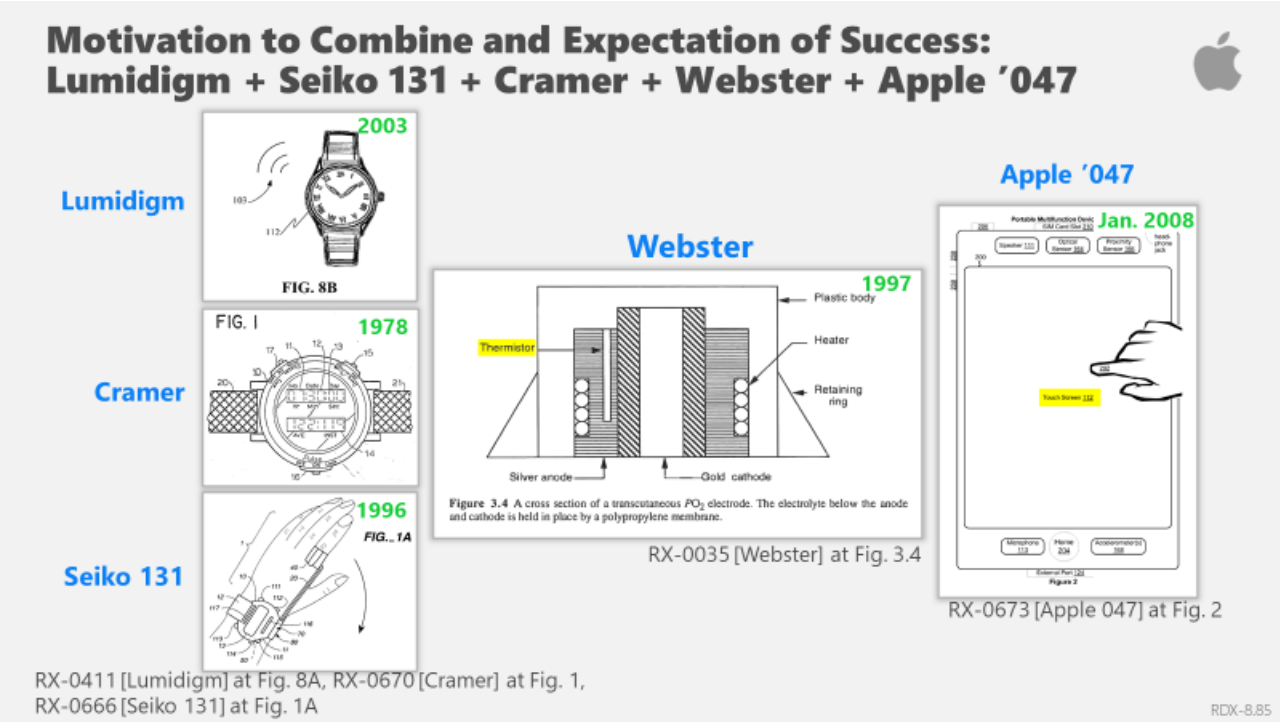

Tr. [Warren] 1241:18-1242:9; RDX-8.85 (summarizing RX0411, RX-0666, RX-0670, RX0035, RX-0673).

A POSITA would be motivated to combine the teachings of Seiko 131, Cramer, Webster, and Apple '047 and to apply these teachings to Lumidigm's wristwatch. Specifically, Lumidigm, Seiko 131, and Cramer are all wrist-worn embodiments of a physiological sensor, and therefore the addition of well-known concepts of a thermistor and touchscreen is effectively a combination of three references (Lumidigm, Seiko 131, and Cramer), plus one (Webster), plus one (Apple '047). Tr. [Warren] 1241:18-1242:9.

A POSITA would recognize that various components of the device, including a protrusion with a convex surface, openings over the photodiodes defined by an opaque surface, transmissive windows extending over the openings, a thermistor, processors to adjust operations based on signals from the thermistor, and a user interface with a touch screen, could be used together and modified in accordance with good engineering principles, and a POSITA would have a reasonable

[redacted]

expectation of success in making the modifications describe above and suggested in the references. Tr. [Warren] 1232:10-1242:9. Moreover, each feature and limitation in the claim has a known function and performs in the manner a POSITA would expect it to operate. *Id.* This is equally true when multiple components of a design are brought together: each feature and component performs its known function in a known way and produces an expected result. *Id.*

d. No Secondary Considerations of Non-Obviousness

Complainants failed to demonstrate the existence of any secondary considerations that could support a finding of non-obviousness. There are none.

No copying. Complainants have shown no evidence of copying of the Poeze Patents by Apple. Tr. [Warren] 1246:13-16; Tr. [Kiani] 134:9-137:7 (admitting no direct evidence of copying or misuse of information by Apple). Nor could they. Apple Watch Series 6 with the Blood Oxygen feature accused in this case was released ***before*** Complainants applied for the Poeze Patents; Apple therefore could not have copied the features recited in the claims themselves. JX-001-JX-003; RX-0333 [September 15, 2020 Apple press release announcing Apple Watch Series 6]. Nor could Apple have copied the Masimo Watch—the only Masimo product Complainants have alleged practice those patents—since images of that watch were not even made public until ***2022*** and the device itself is still not available to the general public. CX-0778C [Photographs of W1 from Arab Health in January 2022]; Tr. [Muhsin] 353:24-354:9 (confirming Complainants "debuted the W1 at Arab Health" in January 2022).

That Masimo has no evidence of copying is unsurprising. As all of Apple's engineers testified, they developed the accused Blood Oxygen feature through their own hard work and innovation, and not by copying Masimo or any other company's technology. *E.g.*, Tr. [Block] 902:10-12 ("Did you copy any other company's technology when developing the blood oxygen

[redacted]

feature in Apple Watch? A. No."), 914:1-7 ("Dr. Block, did you take anything from Masimo in your work on Apple Watch? A. No. Q. Whose ideas are in the blood oxygen feature in Apple Watch? A. We developed that as a team independently. It's our ideas."); Tr. [Waydo] 932:6-9 ("Q. Did you or anyone on your team use information from Masimo's publicly available literature in developing Apple Watch? A. No."), 933:8-11 ("Q. Did you or anyone on your team at Apple base any aspect of the design of Apple Watch on the design of a Masimo pulse oximeter? A. No."); Tr. [Land] 972:19-22 ("Q. To the best of your knowledge, sir, did any of the software or hardware developed by your team come from ideas that originated at Masimo? A. No. … Q. Who did come up with the ideas for the software and hardware for the blood oxygen sensor in the Apple Watch? A. My team in conjunction with Steve Waydo's team did all of the work to develop the blood oxygen sensor of the Apple Watch."), 991:23-25 ("Q. Did you take Masimo information to meet those challenges? A. No, absolutely not."); Tr. [Venugopal] 833:14-17 ("Q. Dr. Venugopal, did you copy any other company's technology to make the blood oxygen feature for Apple Watch? A. No, I did not."); Tr. [Mehra] 893:15-17 ("Q. Have you used any Masimo technology in any way in any of the work that you have done? A. No, I've not.."); Tr. [Mannheimer] 1007:22-1008:7 ("Q. From your position at the heart of the research and development of the blood oxygen sensor for the Apple Watch, have you, Dr. Mannheimer, personally seen any evidence that any of the software or hardware came from Masimo ideas? A. No, I have not. Q. Who actually developed the software and the hardware in the blood oxygen sensor in the Apple Watch Series 6 and Series 7? A. The folks from my team in Brian [Land]'s organization and the HID team under Steve [Waydo]'s organization."); CX-0283 [Charbonneau-Lefort Dep.] 171:21-172:5, 172:16-173:8, 201:10-19; CX-0285 [Dua Dep.] 160:20-161:5.

Complainants' expert Dr. Madisetti testified that Apple sensors are not the Masimo Watch, nor have they been alleged to practice any Poeze Patents.[23] Tr. [Madisetti] 1377:12-1378:10; *see also* Tr. [Madisetti] 1384:5-10 (agreeing products shown on demonstrative alleging copying are "not the Masimo Watch"); CDX-0012C.090; CX-0185C at 18-21 Complainants have therefore not shown ***any*** nexus between the alleged copying evidence and the claimed inventions. *See, e.g.*, *Wm. Wrigley Jr. Co. v. Cadbury Adams USA LLC*, 683 F.3d 1356, 1364 (Fed. Cir. 2012).

Dr. Madisetti's testimony that Apple allegedly "recruited Masimo's chief medical officer" and "Cercacor's chief technical officer" Marcelo Lamego (Tr. 1377:12-20) is similarly irrelevant, as neither Mr. Lamego nor Dr. O'Reilly worked on the design or development of the accused Blood Oxygen feature. Tr. [Land] 972:23-973:3 ("Q. Did Marcelo Lamego contribute any ideas to the software or hardware of the Apple Watch? A. No. Q. Did Dr. Michael O'Reilly contribute to the ideas to the software or hardware of the Apple Watch? A. No."); Tr. [Waydo] 950:1-15 ("Q. Dr. Waydo, what role, if any, did Dr. O'Reilly have on your health sensing algorithm team with respect to the development of the blood oxygen feature? A. Dr. O'Reilly is an anesthesiologist. He has extensive knowledge around the physiological, that's in general, and physiological of PPG signals in particular, but he has no engineering expertise and had no

[23] Dr. Madisetti's opinion that this (Tr. 1377:21-25) is contradicted by the record. As Mr. Land explained, Tr. 961:18-21. Tr. [Land] 962:15-963:9. To the extent this document showed "copying" of anything (it does not), it has nothing to do with either the claimed inventions of the Poeze Patents or the accused Blood Oxygen feature.

[redacted]

contributions to the hardware or software. Q. Who did come up with the ideas for the software and hardware of Apple Watch and the blood oxygen feature? A. The majority of the work happened between the health sensing hardware team, I believe we have heard from a few of them in this hearing, as well as my team. Q. Did any of those ideas come from Masimo? A. No."); Tr. [Venogupal] 833:14-17 ("Q. Did any of the colleagues you worked with in developing the blood oxygen feature for Apple Watch previously work at Masimo? A. No, they did not."); CX-1248C [Apple Responses to Second Set Interrogatories] at 10-12 (same).

That Apple [redacted] to compare blood oxygen measurements, similarly does not show copying, nor has any nexus to the claimed inventions. Tr. [Madisetti] 1377:21-25. As Masimo's Mr. Diab agreed, "there's nothing improper about one company using another company's product for doing comparison studies or benchmarking," rather it "is a standard procedure in all the market just to see where you stand." Tr. [Diab] 243:9-17; *see also* Tr. [Scruggs] 446:8-23 (testifying that Masimo uses reference devices during clinical studies). In any event, none of the [redacted] is alleged to practice the asserted patents. *See* Tr. [Madisetti] 1377:21-1378 (and evidence cited therein).

No commercial success. Complainants do not allege that the Masimo Watch—the only Masimo product alleged to practice the Poeze Patents—has been commercially successful. Tr. [McGavock] 572:18-21, 1429:12-21, 1431:10-13; *see also* Tr. [Muhsin] 374:21-22 [redacted] 514:24-19 [redacted] Further, Complainants have not shown any nexus between the success of the Accused Apple Watches and the claimed inventions. *See Cable Elec. Prods, Inc. v. Genmark, Inc.*, 770 F. 2d 1015, 1027 (Fed. Cir. 1987) (patentee's burden to show success attributable to claimed invention "as opposed to other economic and commercial

factors unrelated to the technical"). The Accused Apple Watches do not use the claimed inventions. *See* § IV.B., *supra*. Moreover, the Accused Apple Watches offer numerous features, of which the accused Blood Oxygen feature is only one. Tr. [Warren] 1242:16-1243:4; CX-1726; RX-0306, RX-0319; RX-0333; CX-1447; Tr. [Land] 970:6-971:13 (identifying numerous features in Apple Watch other than the blood oxygen feature). There is no evidence the Blood Oxygen feature is a driver of commercial success; to the contrary, it is CX-0275 [Caldbeck Dep.] 65:21-22, 66:3-12. Moreover, the Poeze Patents do not cover pulse oximetry generally or all aspects of it. As Professor Warren confirmed, to the extent any commercial success is due to the basic components of pulse oximeters discussed in the Poeze Patents, those concepts were present in the prior art. *See, e.g.*, Tr. [Warren] 1189:12-1195:22, 1200:2-15, 1203:6-16; *see also*, *Tokai Corp. v. Easton Enterprises, Inc.*, 632 F.3d 1358, 1369-70 (Fed. Cir. 2011) ("If commercial success is due to an element in the prior art, no nexus exists."); *Ormco Corp. v. Align Tech., Inc.*, 463 F.3d 1299, 1312 (Fed. Cir. 2006) ("[I]f the feature that creates the commercial success was known in the prior art, the success is not pertinent."); *see* § IV.D., *supra*.

No failure of others. Complainants have not shown others had failed to achieve the invention as of the alleged priority date of the Poeze Patents of July 3, 2008. Numerous prior art devices could measure a physiological parameter as of July 3, 2008. Tr. [Warren] 1189:11-1195:22. Dr. Madisetti contends that because, "[d]espite their high level of skills," Apple's development of its blood oxygen feature required "several dozens of people and many thousands of engineering work [sic]" this demonstrates failure by others (Apple) to achieve the alleged invention. Tr. [Madisetti] 1372:13-1373:5. That Apple's Blood Oxygen feature does not show failure of others to achieve the alleged invention of

the Poeze Patents. Rather, the time was a result of but was the result of Apple's hard work and effort to make a feature that works within the context of Apple Watch with all its other features and Apple's exacting aesthetic standards. Tr. [Warren] 1243:5-16; DocID 773735 (substituting Warren Op. ¶ 244 for Tr. [Warren] 1217:11-21); Tr. [Land] 963:19-964:25 (identifying challenges of developing the Blood Oxygen feature for Apple Watch including as "fit[ting] into the small form factor of the watch … [that] got a little smaller each year" and "work[ing] across all of the human variation that existed in the world"), 971:14-972:8 (explaining challenges included "very tight space" and "interference sources"); Tr. [Venugopal] 832:20-833:10 (identifying development challenges as including competing features, industrial design limitations, and functional requirements); Tr. [Mehra] 853:22-854:855:3 (explaining challenges as "'death by a thousand cuts' because there are so many different risk assessments or technical tradeoffs we have to make amongst ourselves and other project or technology teams that also are competing for space in the Apple Watch" even when the pulse oximetry hardware is 877:23-878:16 (same); Tr. [Block] 902:13-903:2 (explaining that "trying to figure out how to take [the blood oxygen feature] and integrate it into a very complicated, very small consumer electronic device was extremely difficult"); Tr. [Waydo] 923:24-924:16 (identifying challenges as including the 925:23-926:6 (explaining that it took Apple's algorithm team , 938:21-24 ("Q. Okay. And, in fact, it was extremely challenging to develop the blood oxygen feature in the Apple Watch, correct? A. Yes."); CX-0283C [Charbonneau-Lefort Dep.] 22:5-20; 200:17-201:9; RX-0094C [Apple Presentation] at 8

[redacted] *see* Tr. [Land] 965:1-25 (describing same) . Complainants have not shown that any of the features claimed by the Poeze Patent enabled Apple to overcome those challenges.

No skepticism or unexpected results. Complainants have not shown any relevant skepticism or unexpected results. Dr. Madisetti testified there was industry skepticism "measuring pulse oxygenation at the wrist." Tr. 1371:12-1372:12. But the alleged invention of the Poeze Patents has ***nothing to do*** with measuring blood oxygen at the wrist specifically; the specification does not have any disclosures regarding any sensor that takes measurements at the wrist, or even mention the word "watch." *E.g.*, JX-001 at 15:21-23; Tr. [Warren] 1201:19-24; Tr. [Madisetti] 1385:22-24 (agreeing the Poeze Patents do not mention a "watch").

Dr Madisetti's suggestion that a single prior art reference—U.S. Patent No. 6,801,799 to Mendelson (RX-0668)—shows that there was skepticism regarding the use of a "convex protrusion" likewise misses the mark. Tr. [Madisetti] 1374:6-9. The Mendelson patent does not disclose or discuss a "convex protrusion" at all. Tr. [Warren] 1244:18-1245:7, RX-0668 [Mendelson], RDX-8.127 (summarizing RX-0668). As Professor Warren explained, not only was there no skepticism in the field regarding the use of protrusions, it was "quite the opposite"—the use of a "convex protrusion," was well known in the prior art. Tr. [Warren] 1244:11-1246:12. For example, Nippon (RX-0665) is "one of many articles that conveys the idea that, if the detector protrudes slightly into tissue, not only can you get more repeatable coupling, but you can increase the sensitivity of the sensor" thereby improving the signal. Tr. [Warren] 1245:8-16; RX-0665 at 2:57-62 (describing "protrusion" that "provides a more repeatedly coupling effect between the face of the sensor and the tissue and increases the sensitivity of the sensor"), 5:12-17 (explaining protrusion "increas[es] the signal strength of the detected signal"), Fig. 3b. Similarly Seiko 131 and Cramer taught the benefits of a convex protrusion including that it "could be used to increase

the quality of the signal," create "positive contact with a body surface," and make the pulsatile sigla "more available to the field of view of the sensor." Tr. [Warren] 145:1-1246:12; RX-0666 [Seiko 131] at 3:22-28 ("When the outside surface of the light transmittance plate is a convex surface … positive contact between the body surface and outside surface of the light transmittance plate can therefore be improved."), 19:5-8, Fig. 28; RX-0670 [Cramer] at 5:45-51 (describing convex boss region as "resulting in not only effective sensing … but minimum discomfort to the wearer"), Figs. 3 and 6; *see also* Tr. [Warren] 1194:15-1195:5, RDX-8.12 (showing protrusions in the prior art, including RX-0473 [Smart] at Fig. 1, RPX-006 [Kansas State 6D]).

Non-infringing alternatives are irrelevant. Complainants argue that the existence of non-infringing alternatives to the asserted claims of the Poeze Patents demonstrates they are not obvious. But existence of non-infringing alternatives is not a recognized secondary consideration. *Power Integrations, Inc. v. Fairchild Semiconductor Int'l, Inc.*, 711 F.3d 1348, 1368 (Fed. Cir. 2013) ("Objective evidence of nonobviousness can include copying, long felt but unsolved need, failure of others, commercial success, unexpected results created by the claimed invention, unexpected properties of the claimed invention, licenses showing industry respect for the invention, and skepticism of skilled artisans before the invention.").

No industry praise or long-felt but unmet need. Complainants have not presented any evidence of industry acceptance or praise, licensing, or a long-felt but unmet need with respect to the Poeze Patents.

2. Invalidity Under 35 U.S.C. § 112

The asserted Poeze claims are also invalid under 35 U.S.C. § 112.

To begin, there are no embodiments in the Poeze specification that disclose the claimed combinations of elements. Instead, the claims are cobbled together from multiple embodiments in

[redacted]

a manner insufficient to satisfy the written description requirement. *Flash-Control, LLC v. Intel Corp.*, No. 2020-2141, 2021 WL 2944592, at *3-4 (Fed. Cir. July 14, 2021) ("[T]he specification must present each claim as an 'integrated whole.' … A patent owner cannot show written description support by picking and choosing claim elements from different embodiments that are never linked together in the specification."); *Novozymes A/S v. DuPont Nutrition Biosciences APS*, 723 F.3d 1336, 1349 (Fed. Cir. 2013) ("an amalgam of disclosures plucked selectively from" an application did not satisfy Section 112 because no disclosure described claim "as an integrated whole").

All of the asserted claims require (a) multiple LEDs, (b) multiple photodiodes, and (c) a protrusion with a plurality of openings, positioned or arranged over the photodiodes, each of which includes an opaque lateral surface or is lined with an opaque material, along with other limitations. No embodiment in the Poeze specification discloses this combination of elements. *E.g.*, Tr. [Warren] 1246:24-1247:7 (confirming no embodiments include claimed combinations, noting that "[a]s an example, the combination of three LEDs, three photodiodes, and a plurality of openings over the photodiodes with opaque lateral surfaces as in ['501 patent] claim 12, I can't find a single embodiment," and "[t]he same is true" for the other independent claims); RDX-8.131 (describing relevant limitations).

For example, while the Poeze Patents disclose, in Figures 3 and 4, an embodiment with three or more photodiodes and a protrusion with openings over those photodiodes, neither these embodiments, nor any others, show the claimed combinations of elements:

[redacted]

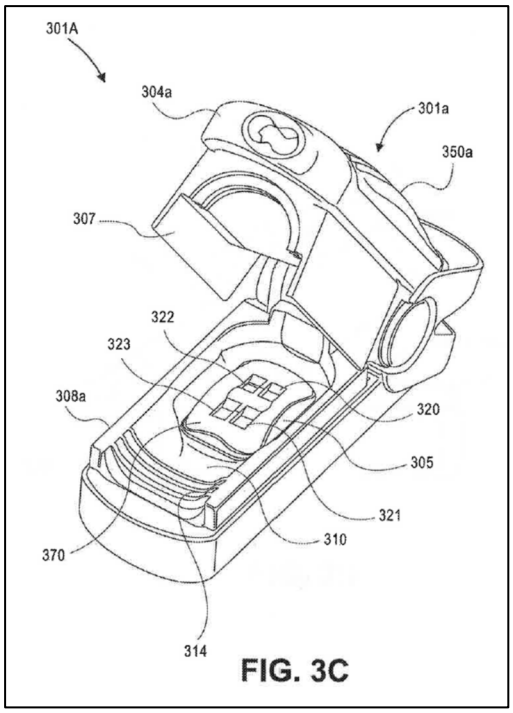

FIG. 3C

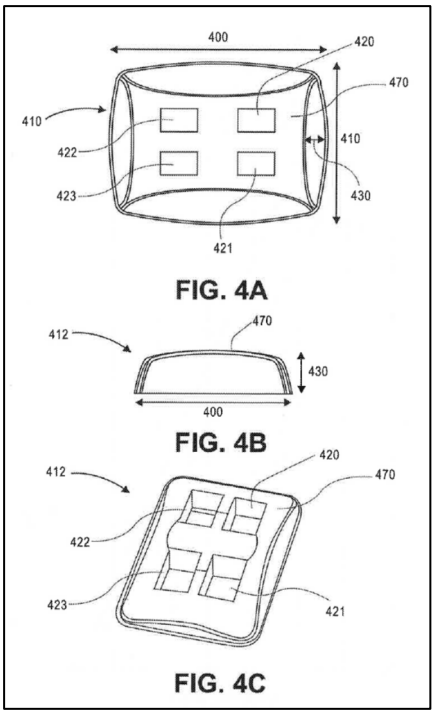

JX-001 ['501 patent] Fig. 3C; *see also* Tr. [Kiani] 99:17-100:3 (discussing Figure 3C). These figures have an "emitter shell," but no disclosure of what is ***in*** that shell and no disclosure anywhere of the specific arrangement of three LEDs (recited by '501 claim 12); the specific arrangement of a "plurality" of LEDs or emitters (recited by '502 claim 22 and '648 claims 24 and 30); or the specific arrangement of "sets" of LEDs (recited in '502 claim 28 and '648 claim 12). The specification also provides minimal details about the openings in this embodiment; it states that the protrusion can have openings, and that the openings can have windows, but it does not disclose ***any*** openings with opaque lateral surfaces or lined with opaque material (recited in all independent claims). *E.g.*, JX-001 ['501 patent] 19:38-67, 23:61-24:8. Accordingly, none of the claims is presented as an "integrated whole" in the specification, and the claims are therefore invalid for lack of written description.

In his rebuttal testimony, Dr. Madisetti cited portions of the patent specifications in support of ***individual*** claim limitations regarding multiple LEDs, three or more photodiodes, and opaque

[redacted]

lateral surfaces, and suggested that a POSITA would have understood that these disclosures of elements of different embodiments could be combined to yield the claimed combinations—but cited ***no*** embodiments containing the actual combinations of limitations covered by the asserted claims. *See* Tr. [Madisetti] 1347:14-1349:6.

Dr. Madisetti focused, in particular, on Figure 7B:

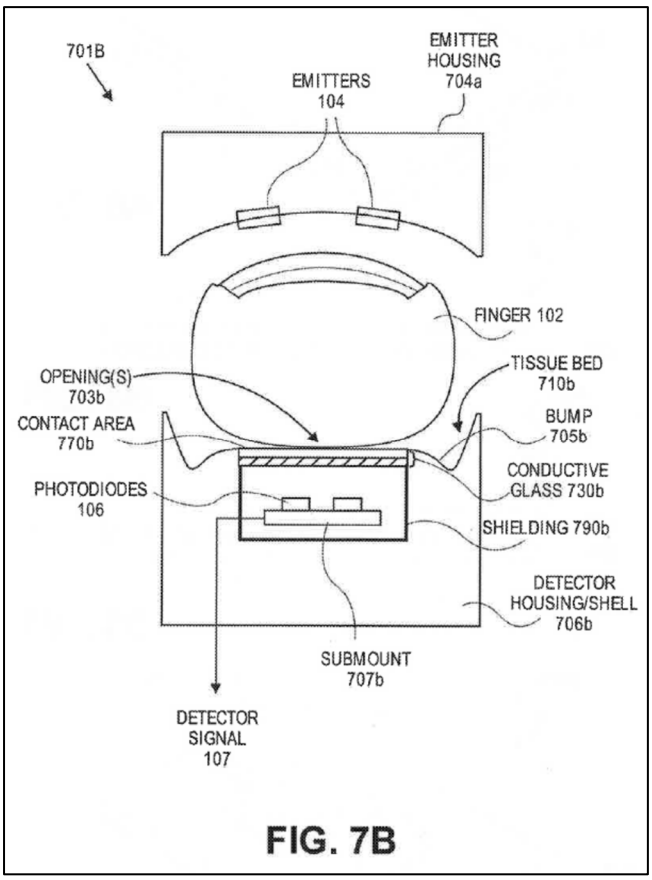

FIG. 7B

JX-001 ['501 patent] Fig. 7B (cited on CDX-0012C.044). But Figure 7B discloses only two emitters and two photodiodes. It also describes only a ***single*** opening over the photodiodes—not the ***multiple*** openings required in the asserted claims. *See* Tr. [Madisetti] 1347:14-1349:6.

Dr. Madisetti also cited a generic reference to implementing the features of the sensor in Figure 7B "with any of the sensors 101, 201, 301 described above." CDX-0012C.044 (quoting JX-001 ['501 patent] at 26:25-29). But this disclosure, merely indicating a mix-and-match

[redacted]

approach to the embodiments, is insufficient. *See Flash-Control, LLC*, 2021 WL 2944592, at *4 ("The written description requirement is not met when, as here, the specification provides at best disparate disclosures that an artisan might have been able to combine in order to make the claimed invention.").[24]

There are additional defects specific to particular claims and limitations.

'502 claim 22 is invalid for lack of written description. The specification nowhere discloses "at least ***four emitters***" that each "comprise[] a respective ***set of at least three LEDs***" as claim 22 requires. Tr. [Warren] 1247:8-12 (confirming no discussion or embodiments with these elements). In rebuttal, Dr. Madisetti again pointed to Figure 7B and the specification's separate disclosures of "emitters 104" with "sets of optical sources" (Tr. [Madisetti] 1349:7-1350:3, 1350:22-1352:4), but he failed to identify any specific support for ***four*** emitters that each contain a set of at least ***three LEDs***. Accordingly, the specification does not convey that the inventors actually possessed this element as of the '502 patent's alleged priority date.

'502 claim 28 and ***'648 claim 12*** are also invalid for lack of a written description. The common specification fails to disclose anything regarding separate ***sets of LEDs*** that each have LEDs emitting light at a "***first wavelength***" and "***second wavelength***" as '502 limitations [28A] and [28B] and '648 [8A] and [8B] require. *See* Tr. [Warren] 1247:13-17 (confirming no discussion of these elements). In rebuttal, Dr. Madisetti again pointed to the specification's disclosures of "emitters 104" with "sets of optical sources," (Tr. [Madisetti] 1349:7-1350:3, 1350:22-1352:4),

[24] Furthermore, while Dr. Madisetti's testimony is insufficient to show the Poeze Patents satisfy the written-description requirement, his acknowledgement that a POSITA would have expected it was possible to implement the claimed elements in a variety of arrangements—even those not disclosed—supports Apple's position on obviousness. As discussed above, a POSITA would have been motivated to and had a reasonable expectation of success combining teachings of Lumidigm with one another and with the other references discussed above, particularly as Lumidigm itself expressly suggests doing so.

[redacted]

but he failed to identify any support for sets of LEDs that ***each*** had LEDs emitting light at a "first wavelength" and "second wavelength." Accordingly, the '502 and '648 patent specification does not convey that the inventors actually possessed these elements.

'502 claim 28 is also invalid for lack of enablement. '502 claim 28 requires a "user interface comprising a ***touch-screen display***, wherein the user interface is configured to display indicia responsive to the oxygen saturation measurement of the user" [28K]. The '502 specification, however, does not provide any guidance to enable any user-worn device with a "touch-screen display" that "displays indicia responsive" to any "measurement." Tr. [Warren] 1247:18-23 (confirming that "two brief references to touchscreens" in the Poeze Patent specification would not tell a POSITA how to implement a user interface with a touchscreen). Moreover, none of the references in the '502 patent to a "touch-screen display" enables including the touch screen in a user-worn device. *Id.* In short, the specification does not teach a POSITA how to make and use an invention with such elements. In rebuttal, Dr. Madisetti did not explain how a touch-screen display would have been ***enabled***, but instead discussed only the instances in which a touch-screen was briefly ***mentioned*** in the specification. Tr. [Madisetti] 1352:5-24. Dr. Madisetti made no effort to explain how such passing reference would have been sufficient for enablement.

Finally, ***'501 claim 12, '502 claim 28, and '648 claim 24*** are invalid for lack of enablement, and ***'648 claim 24*** is further invalid for lack of written description. '501 claim 12 and '502 claim 28 require that the openings in the protrusion include or are defined by opaque surfaces to "avoid" or "reduce" "light piping." '501 limitation [1E]; '502 limitation [28F]. '648 claim 24 requires that "the protrusion comprises opaque material configured to substantially prevent light piping." [24]. But the specification provides no guidance to a POSITA on how to manage the problem of

[redacted]

"light piping" or how to "avoid" or "reduce" light piping, aside from general references to the use of opaque materials. Tr. [Warren] 1247:24-1248:4 ("Q. … [H]ave you seen anything in the Poeze specification that provides guidance on reducing or avoiding light piping other than a general reference to the use of opaque materials? A. No. I've just seen a vague correlation between the two, that's it."). The specification also does not explain when "light piping" has been "substantially" prevented, or how the inventors accomplish this with "a protrusion compris[ing] opaque material configured to substantially prevent light piping." *Id.* The specification suggests, at a high level, that opaque material may help reduce noise including "light piping" but offers no teachings enabling others to accomplish the same goal and no guidance on the circumstances under which a POSITA can determine if it has been "substantially prevent[ed]." JX-002 ['502 patent] at 7:65-8:7. The specification also provides no written description of how the inventors constructed their sensor to accomplish this. In rebuttal, Dr. Madisetti merely identified instances in which the specification discusses reduction of light piping (Tr. [Madisetti] 1350:4-21, 1352:25-1353:11), but never explained how those threadbare disclosures would enable a POSITA to "reduce" or "avoid" light piping as required by the claims, or how the specification provides guidance on when such light piping has been "substantially" prevented. For these reasons, these three claims are valid for lack of enablement, and '648 claim 24 is further invalid for lack of written description.

E. Unenforceability

1. Prosecution Laches

The Poeze Patents are unenforceable under the doctrine of prosecution laches because Masimo unreasonably and inexcusably delayed prosecuting them, causing Apple material prejudice. *Cancer Research. Tech. Ltd. v. Barr Labs., Inc.*, 625 F.3d 724, 728-29 (Fed. Cir. 2010).

[redacted]

Between July 3, 2008 and August 25, 2008, Masimo filed seven original provisional applications to which the Poeze Patents claim priority. JX-001.3 ['501 patent] (paragraph (60)); *accord* JX-002.2 ['502 patent]; JX-003.3 ['648 patent]. Soon thereafter, on August 25, 2008, Masimo filed two related design patents. JX-001.3 ['501 patent] (paragraph (60)); *accord* JX-002.2 ['502 patent]; JX-003.3 ['648 patent]. Masimo continued to file related continuations and continuations-in-part until July 1, 2010. JX-001.3 ['501 patent] (paragraph (60)); *accord* JX-002.2 ['502 patent]; JX-003.3 ['648 patent].

After this concentrated succession of applications in this patent family, Masimo put a hold on any new applications in this family for nearly five years—resuming only after Apple launched Apple Watch. Masimo then embarked on a pattern of filing new applications shortly after the release of new Apple Watch series:

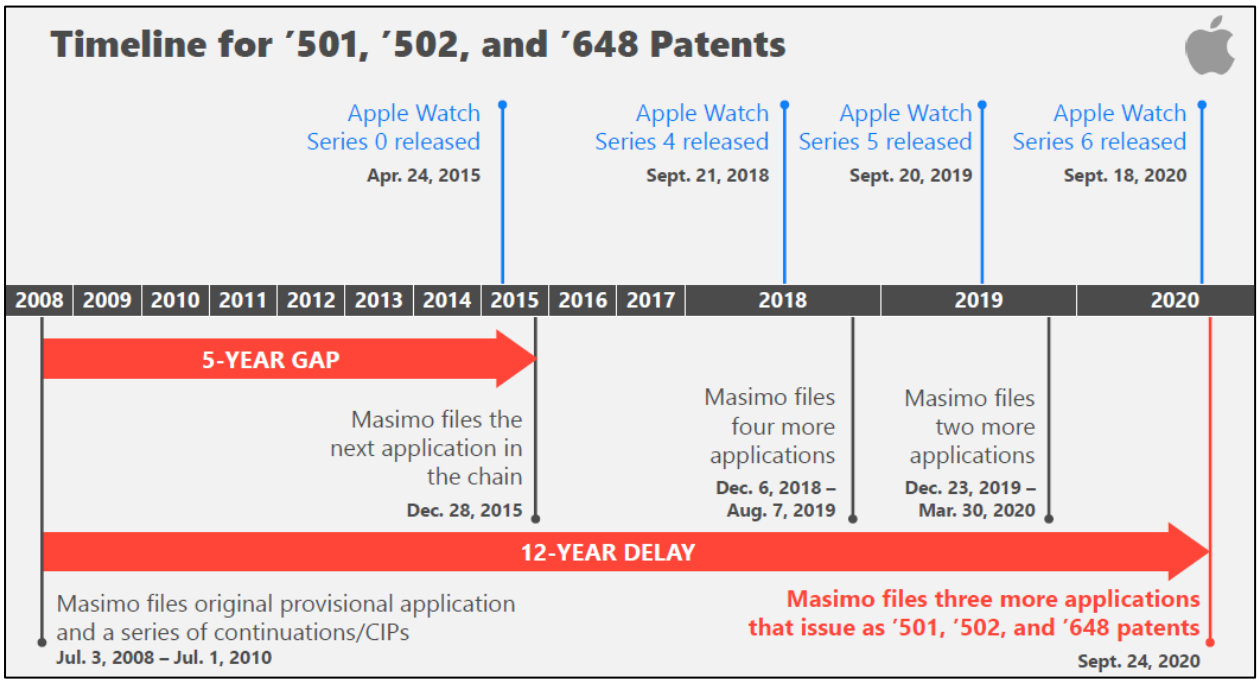

RDX-1.16 (based on CX-1287.10; CX-1532.11-12; RX-0333.0011; RX-0023.0001; JX-001.3 ['501 patent] (paragraph (60)); JX-002.2 ['502 patent]; JX-003.3 ['648 patent]); *see also* Tr. [Kiani] 138:1-10 (acknowledging Apple Watch release dates).

On September 18, 2020, Apple released Apple Watch Series 6—the first of the Accused Apple Watches. CX-1287.10; *accord* CX-1532.11-12; RX-0333.0011. Days later, on September 24, 2020, Masimo filed three continuation patents applications that ultimately issued as the Poeze Patents, in early 2021. JX-001.2 ['501 patent] (paragraph (62)); *accord* JX-002.1 ['502 patent]; JX-003.2 ['648 patent]; *see also* Tr. [Cromar] 1030:18-1031:6. In other words, it was not until ***after*** Apple's release of Series 6 Watch in September 2020—more than ***twelve years*** after the initial application to which those patents claim priority—that Masimo filed the applications for the Poeze Patents. While "[t]here are no 'firm guidelines' for when laches is triggered … the Federal Circuit has found instructive two prior Supreme Court cases finding 'patents unenforceable based on eight and nine-year prosecution delays." *Personalized Media Commc'ns, LLC v. Apple, Inc.*, 552 F. Supp.3d 664, 686 (E.D. Tex. 2021) (No. 2:15-CV-01366-JRG, 2021 WL 3471180, at *16 (E.D. Tex. Aug. 5, 2021) (quoting *Symbol Techs., Inc. v. Lemelson Med., Educ. & Research Found., LP*, 422 F.3d 1378, 1385 (Fed. Cir. 2005); *Hyatt v. Hirshfeld*, 998 F.3d 1347, 1366-37 (Fed. Cir. 2021) (citations omitted)).

Masimo attempted to show that its prosecution of earlier filed applications in the Poeze Patent family was diligent, but made no effort to explain why it waited more than twelve years to ***file*** the asserted Poeze Patents, thereby significantly delaying the prosecution of those patents specifically. That is, prosecution activities with respect to other applications cannot justify the unreasonable delay ***for the asserted patents***.

[redacted] *See* Tr. [Cromar] 1029:12-1030:17 [redacted] Tr. [Kiani] 153:16-23 [redacted]. Although Mr. Cromar incorrectly suggested the timeline above is "missing some of the filings" (Tr. 1038:10-19), the prosecution histories speak for themselves: After a concentrated period of applications between July 2008 and July 2010 (noted on the timeline) Masimo waited five years before filing any additional new applications (after Series 0 was released); and waited twelve years after the original provisionals to file the applications for the Poeze Patents. JX-001.2-3 ['501 patent]; JX-002.1-2 ['502 patent]; JX-003.2-3 ['648 patent]. It is irrelevant whether "there was active prosecution through that time period" of ***other*** patents in the family (Tr. [Cromar] 1036:11-18); the relevant inquiry is whether the delay in filing the ***asserted*** patents is unreasonable. It was.

Complainants' patent-prosecution expert, Robert Stoll, similarly testified that the prosecution of members of the Poeze Patent family proceeded at an ordinary pace, with specific reference to prosecution activity for three applications in that family. Tr. [Stoll] 1410:23-1411:7 (discussing CDX-0016C.002). Again, Mr. Stoll offered no opinions with respect to the timing of the ***filing*** of the ***specific*** applications that resulted in the '501, '502, and '648 patents—which, according to both Masimo's prosecution counsel and CEO, could have been filed at any point after 2008, but were not filed until twelve years later and ***after*** the launch of the first accused product.

The totality of the circumstances, including the series of events from 2008 to 2020, shows that Masimo lacked diligence in filing and prosecuting the Poeze Patents. Instead, by apparently tying its filings and prosecutions of its continuation applications to Apple's product releases, the

most reasonable inference is that Masimo intentionally and methodically delayed prosecution to allow the market for wearable technology to grow and gain the benefit of being able to draft claims following Apple's releases of its new products in that market. The fact that Masimo's delays were not isolated, but instead tracked the releases of Apple Watch products, strongly suggests that Masimo inexcusably delayed its patents. *See Symbol Techs., Inc. v. Lemelson Med., Educ. & Research. Found.*, 422 F.3d 1378, 1385-86 (Fed. Cir. 2005) (noting that "prosecution laches may render a patent unenforceable when it has issued only after an unreasonable and unexplained delay in prosecution" and that "an examination of the totality of the circumstances, including the prosecution history of all of a series of related patents and overall delay in issuing claims, may trigger laches")

Furthermore, Apple has suffered prejudice due to Masimo's misconduct. During the time between Masimo's original provisional applications and filing of the Poeze Patents, Apple invested heavily in developing Apple Watch, improving on the technology from generation to generation, and helping grow the wearable technology market.[25] *See, e.g.*, *Seaboard Int'l, Inc. v. Cameron Int'l Corp.*, No. 1:13–CV–00281–MLH–SKO, 2013 WL 3936889, at *4 (E.D. Cal. July 30, 2013) (allegations of investments made in accused product during delay in prosecution sufficient to state claim for prosecution laches). By delaying its filing of the Poeze Patents until Apple had already released the Series 6, Masimo also gained an improper litigation advantage by drafting claims

[25] *See, e.g.*, Tr. [Waydo] 923:1-926:6, 933:12-934:10 (Apple's Director of Human Interface Devices Health describing efforts to develop blood-oxygen feature, including *id.* 926:1-6, as well as Apple's general approach to technology development); Tr. [Land] 954:23-955:9, 957:5-959:2, 962:15-966:7 (describing health-sensing-hardware group o as well as efforts to develop blood-oxygen feature); *see also* RX-0094C (of Apple Watch Series 6 hardware); RX-0023, CX-1287, CX-1532, RX-0333 (Apple Watch press releases).

intended to cover those products. *See In re Bogese*, 303 F.3d 1362, 1369 (Fed. Cir. 2002) (rejecting argument that delay in prosecution was justified by patentee's desire to obtain claims on competitive products); *Hynix Semiconductor Inc. v. Rambus Inc.*, Nos. CV-00-20905-RMW, C-05-02298 RMW, C-05-00334 RMW, C-06-00244 RMW, 2007 WL 4209386, at *4-5 (N.D. Cal. Nov. 26, 2007) (denying summary judgment on prosecution laches, noting in part that "[i]nternal Rambus documents also strongly suggest that Rambus was drafting its claims to cover technologies as they developed"). But for Masimo's bad-faith actions in delaying prosecution of its patents, it would not currently be in position to bring this action against Apple.

2. Unclean Hands

Complainants' actions during prosecution of the Poeze Patents discussed in Section IV.E.1, *supra*, further warrant that their claims for relief with respect to those patents be barred under the doctrine of unclean hands. "[A] determination of unclean hands may be reached when 'misconduct' of a party seeking relief 'has immediate and necessary relation to the equity that the seeks in respect of the matter in litigations,' i.e. 'for such violation of conscience as in some measure affect the equitable relations between the parties in respect of something brought before the court.'" *Gilead Scis., Inc. v. Merck & Co., Inc.*, 888 F.3d 1231, 1239 (Fed. Cir. 2018), *cert. denied*, 139 S. Ct. 797 (2019) (*quoting Keystone Driller Co. v. General Excavator Co.*, 290 U.S. 240, 245 (1933)). "The 'immediate and necessary relation' standard, in its natural meaning, generally must be met if the conduct normally would enhance the claimant's position regarding

[redacted]

legal rights that are important to the litigation if the impropriety is not discovered and corrected." *Id.* at 1240. In patent litigation, conduct concerning the prosecution of the asserted patents, as well as related patents, can bear an "immediate and necessary relation" to the relief sought in infringement concerning patent litigation. *See, e.g.*, *Consol. Aluminum Corp. v. Foseco Int'l Ltd.*, 910 F.2d 804, 812 (Fed. Cir. 1990) (holding that patent owner's "concealment" of best mode "permeated the prosecution of the other patents-in-suit and renders them unenforceable" under doctrine of unclean hands).

V. U.S. PATENT NO. 10,687,745

Complainants' prosecution of the '745 patent family follows a familiar pattern: Complainants filed the original provisional application just months after Apple Watch Series 0 was released, and new applications tracking releases of later Apple Watch models. As with the Poeze Patents however, Complainants' attempt to craft patent claims around Apple Watch rather than any actual innovation failed to produce the result Complainants desired. The evidence has shown that the '745 patent is invalid, not infringed, and unenforceable, and Complainants have no protectable domestic industry with respect to it.

First, the asserted claims of the '745 patent are invalid. The only purported point of novelty of the '745 patent—changing the shape of the light emitted from the LEDs from a "first shape" to a "second shape" (Tr. [Al-Ali] 334:9-14, 335:23-24)—was not new at all. The Iwamiya patent [RX-0130] filed five years before the '745 taught exactly that: using a light guide to diffuse and irradiate light from the light's initial emitted shape into a second annular shape, wherein the light is projected toward the tissue in an annular shape. RX-0130 at 6:11-14; Tr. [Sarrafzadeh] 1098:19-1099:2. As Professor Sarrafzadeh confirmed, a POSITA would have found it obvious to combine the teachings of Iwamiya with other well-known elements in the art as disclosed by Sarantos [RX-

[redacted]

0366] and Venkatraman [RX-0368] to achieve the claimed combinations. Moreover, the original Apple Watch Series 0 [RPX-5] itself had a material—a Fresnel lens—the effect of which was to change the shape light emitted from the infrared LEDs into a crescent shape. Tr. [Venugopal] 819:1-7, 823:1-9; Tr. [Sarrafzadeh] 1093:3-8. The '745 patent is thus invalid over the prior art and, as discussed below also fails to satisfy Section 112.

Second, the Accused Apple Watches do not infringe because they have no material configured to change "the first shape" to "a second shape" as the asserted claims require. To the contrary, the light emitted from the LEDs in the Accused Apple Watches changes shape because of the nature of the light itself: "The first shape" of light emitted by the LEDs in the Accused Apple Watches is a square because the LEDs themselves are square. Tr. [Sarrafzadeh] 1114:15-1116:1; Tr. [Venugopal] 830:4-5; *id.* at 830:19-831:9; Tr. [Madisetti] 775:1-25. That emitted light then spreads in all directions in what is known as a Lambertian profile. Tr. [Sarrafzadeh] 1114:15-1115:1; Tr. [Venugopal] 830:23-831. Accordingly, the light emitted by the LEDs changes from a square to a circular shape without passing through any material and has ***already changed*** by the time it reaches [redacted] that Masimo alleges is the "material configured to change the first shape into a second shape." In other words, the [redacted] cannot change "the first shape" into anything, because the light has already fundamentally changed shape ***before*** it reaches the [redacted] Tr. [Sarrafzadeh] 1115:2-1116:16, 1118:12-24.

Professor Sarrafzadeh's testimony on this issue is unrebutted. Faced with the below image, Complainants' expert Dr. Madisetti testified he ***could not say*** whether figures A and B were the same shape or different shapes:

[redacted]

RDX-12.5 (before animation) (based on CX-0307i [Madisetti Op. Rpt. App'x I] at 17); Tr. [Madisetti] 783:1-4 ("Q. You cannot tell me one way or the other whether the Figures A and B on RDX-12.5 are the same shape or different shapes? A. ***I cannot. I can't say.***"); *see also id.* at 1384:23-1385:4. But those shapes come directly from Dr. Madisetti's own testing and are the shape of the light emitted from an infrared LED in the Accused Apple Watches at the surface of the LED versus the shape before it passes through the [redacted]

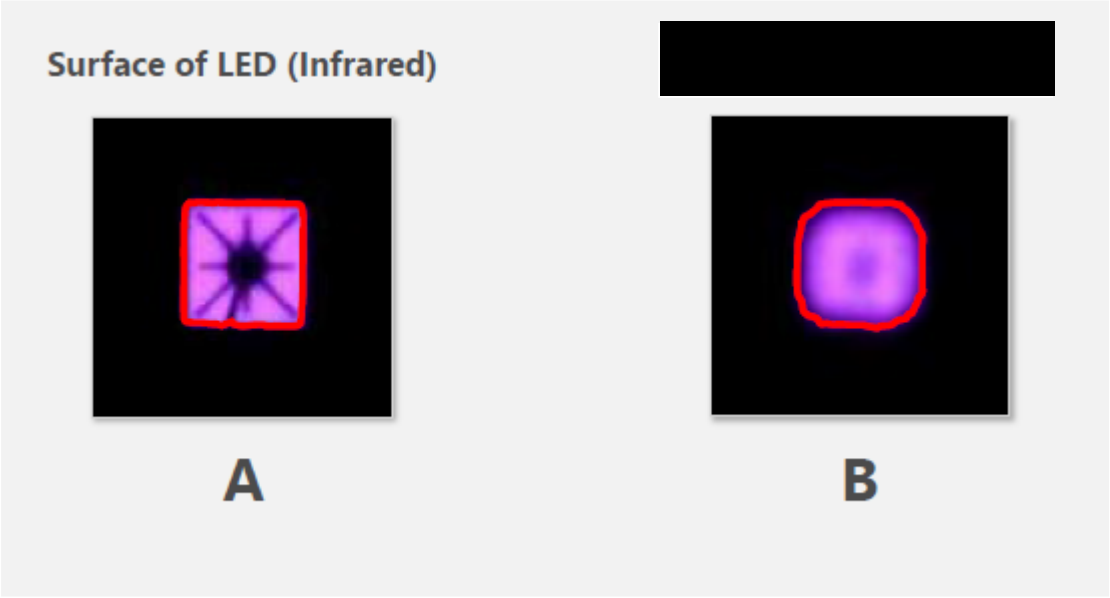

[redacted]

RDX-12.5 (after animation) (CX-0307i [Madisetti Op. Rpt. App'x I] at 17); *see also* Tr. [Madisetti] 1384:23-1385:10 (confirming images in RDX-12.5 above are from his testing)

Dr. Madisetti's inability to opine that the shape of light that reaches [redacted] is the same as "the first shape" emitted from [redacted] is fatal to Complainants' infringement case. As Professor Sarrafzadeh confirmed, it is ***not*** the same shape and therefore not "***the first shape***" as the asserted claims require.

Moreover, [redacted] is not configured to change the shape of the light at all. Rather, as explained by Apple engineer Dr. Venugopal, [redacted]. Tr. [Venugopal] 826:13-20. [redacted] *Id.* 830:19-831:9; *see also* Tr. [Sarrafzadeh] 1118:1-11. In other words, there is no change in shape at all caused by [redacted] only a change in ***size***, which the parties agree is not sufficient to meet the claims.

Third, Complainants' prosecution strategy itself renders the asserted claims unenforceable under the doctrine of prosecution laches. Masimo has offered no reason for its delay in filing the asserted claims. The fact that Masimo's delays were not isolated but instead tracked the releases of Apple Watches further demonstrates they were inexcusable. Moreover, this delay was prejudicial to Apple, which, during the years Masimo delayed applying for the claims of the '745 patent, invested heavily in developing the Accused Apple Watches and growing the wearable technology market generally.

Finally, Complainants have failed to show that any purported domestic-industry article practices claim 18 of the '745 patent, either now or at the relevant time when the Complaint was

[redacted]

filed. The only "Masimo Watch" alleged to practice the '745 patent [redacted]—both of which do not remotely resemble the "Masimo Watch Product" described in that Complaint. In any event, Complainants have not shown that CPX-029, CPX0052, or any other of the "Masimo Watch" articles on which Complainants rely has "a processor configured to … determine a physiological parameter of the user" as required by claim 18. Complainants did not introduce, nor did Dr. Madisetti opine on, [redacted]. Nor did Complainants or Dr. Madisetti introduce any evidence sufficient to show the material in those articles have the claimed "light diffusing material." As Professor Sarrafzadeh testified, the demonstrations of the devices failed to carry Masimo's burden to satisfy the technical prong of the domestic industry requirement.

A. Level of Skill of a Person of Ordinary Skill in the Art

A POSITA at the time of the alleged invention would have had a B.S. degree in an academic discipline emphasizing the design of electrical, computer, or software technologies, in combination with training or at least one to two years of related work experience with capture and processing of data or information, including physiological monitoring technologies. Alternatively, a POSITA could have had a Master of Science degree in a relevant academic discipline with less than a year of related work experience in the same discipline. *See* Tr. [Sarrafzadeh] 1089:1-15.

B. Claim Construction ("Second Shape" Claims 1, 20)

Claim Term	Apple's Construction	Masimo's Construction
"second shape" (claims 1, 20)	Plain and ordinary meaning (*i.e.*, a shape different than the first shape)	"A shape that is different from the first shape, where a difference in size, without any other difference, is not a shape different from the first shape"

[redacted]

The parties proposed differently-phrased constructions, but under either there is no infringement and the claims are invalid.

C. Noninfringement

Complainants allege infringement of dependent claims 9 and 27, which depend from independent claims 1 and 20. Limitations 1A and 20A each require "a plurality of light-emitting diodes configured to emit light in ***a first shape***." '745 patent, cls. 1 and 20. Limitations 1B and 20B then require a "material configured to ***change the first shape*** into a second shape." *Id*. Together, these limitations require that the claimed "material" must receive light having the same shape that was emitted by the light-emitting diodes, i.e., the "material" must receive light having "the first shape." That is because the plain language of Limitations 1B and 20B "refers back to the shape that [] was emitted," which is "the same first shape" described in Limitations 1A and 20A. Tr. [Sarrafzadeh] 1112:5-21; *see also Bicon, Inc. v. Straumann Co*., 441 F.3d 945, 954 (Fed. Cir. 2006) (holding "that 'the abutment' of limitation [e] refers to the particular abutment described [earlier in] the claim, not to any … abutment"); *Process Control Corp. v. HydReclaim Corp*., 190 F.3d 1350, 1356 (Fed. Cir. 1999) (holding that "a discharge rate" in an earlier limitation refers to same discharge rate as "the discharge rate" in later limitation).

Thus, Limitations 1A and 1B (and 20A and 20B) require the claimed "material" to: (1) receive and act on light having the ***same*** "***first shape***" that was emitted by the light-emitting diodes; and (2) be configured to change that "first shape" into "a second shape." Tr. [Sarrafzadeh] 1112:5-21. For example, as Professor Sarrafzadeh explained with reference to Figures 7A and 7B (below), "the shape that is … emitted from LED [702], that exact same shape is received by the diffuser [704], because they abut each other, they touch each other." Tr. [Sarrafzadeh] 1112:22-1113:10.

[redacted]

Diffuser 704 "takes the light that is emitted from LED [702] and changes that to an annular shape. So that's the change of shape." *Id.*

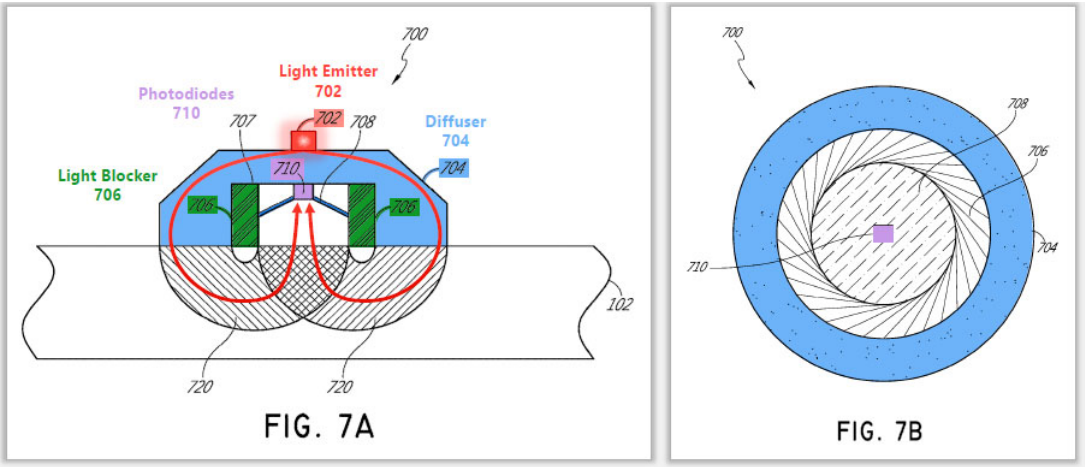

See '745 patent, Figs. 7A & 7B, 10:65-11:2 (diffuser 704 can "receive emitted light in the form of a 2D point optical source" and "spreads the optical radiation over a wide, donut-shaped area, such as the area outlined … in Fig. 7B"); RDX-7.80C (annotating '127 patent, Figs. 7A, 7B).

The Accused Apple Watches do not meet the requirements of claims 1 and 20 for two independent reasons. ***First***, the [redacted] which Complainants identify as the claimed "material," does not receive or act on light having "the first shape" emitted from the LEDs. ***Second***, [redacted] is not configured to change the shape of light it receives into a "second shape."

1. [redacted] Does Not Receive Light Having the "First Shape" That Was Emitted By the "Light-Emitting" Diodes" [1B], [20B]

Professor Sarrafzadeh and Apple engineer Dr. Venugopal explained why [redacted] does not receive, or act on, light having "the first shape" emitted by the LEDs. ***First***, the LEDs on the [redacted] have a "square emission surface" and therefore emit light that first appears in a "square" shape. Tr. [Sarrafzadeh] 1114:15-1116:1; *see also* Tr. [Venugopal] 830:4-5 ("Q. And what shape are the LEDs? A. These are square in shape."); *id.* at 830:19-831:9 ("Q. What shape is the light emitted from the LEDs we just looked at? A. The LEDs have a square shape … so it is

square in shape."); RPX-40 (square LEDs); RX-0677C.008, .0031 (square LEDs in Series 6 Folsom 1 module, below); RX-0897C.008, .0031 (square LEDs in Series 7 Folsom 2 module).

Dr. Madisetti admitted with respect to the Accused Apple Watches "[t]he ***first shape*** is like ***a square***." Tr. [Madisetti] 775:1-25.

Second,

Third, the LED emits light in a Lambertian emission pattern, such that the emitted light travels in multiple directions away from the LED in a cone-like pattern. As the light propagates the "light [] emitted from LED, being a square, changes shape to a circular shape because of Lambertian emission." Tr. [Sarrafzadeh] 1114:15-1115:1; Tr. [Venugopal] 830:23-831 ("The light that's emitted from the LEDs spreads significantly in all direction based on the physics of the LED

[redacted]

surface and spreads [redacted] and assumes a generally circular shape."); *see also* Tr. [Al-Ali] 334:15-25 (LEDs come in "different shapes" but, regardless, "the emission out of the LEDs comes out almost like a cone").

By the time the light emitted by the square LEDs is incident on [redacted] the square "first shape" has already changed to a different, more circular shape due to the presence of an air gap and the physics of Lambertian emission. *See id.*

a. Complainants' expert's test images confirm that light emitted by the LEDs changes shape as it travels to [redacted]

Professor Sarrafzadeh's and Dr. Venugopal's analysis was empirically confirmed by ***Dr. Madisetti's*** own testing. Below are Dr. Madisetti's photographs of (1) "the first shape" of the LED light "as it is at the surface of the LED" (left); and (2) the light "shape that is received by the [redacted] (right), from the red, infrared, and green LEDs. Tr. [Sarrafzadeh] 1115:2-1116:16.

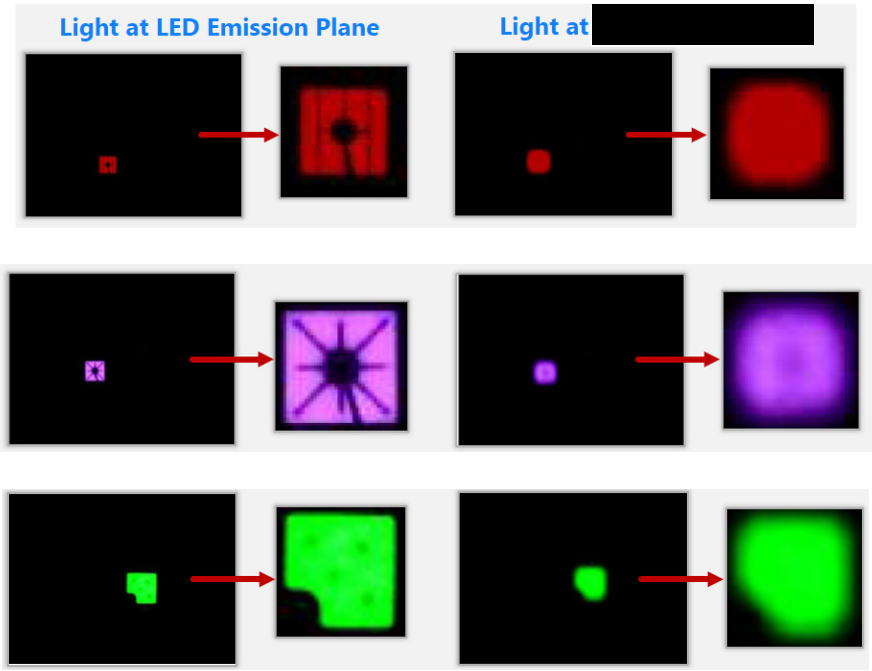

See CX-0307i at 10-12 (Dr. Madisetti's testing); RDX-7.140C-.142C (annotating CX-0307i). Dr. Madisetti agreed that the first series of images (on the left, above) represented the "***first shape***,"

i.e., the "the output from the LED" at the LED "surface." *See* Tr. [Madisetti] 789:4-12 (agreeing "***the surface of the LED*** [was] where [he] took those photos"); CDX-11 at .77 and .88 (describing CX-0307i at 10-12 and the first series of images as the "First Shape" and "the output from the LED"). Dr. Madisetti also conceded the second series of images (on the right, above) depict "how the ***light emitted by the LEDs would appear when incident on*** or "before Tr. [Madisetti] 789:14-790:3 (agreeing, with respect to the second series of images, reproduced in RDX-12.8, his expert report had stated, "I directed the Masimo employees to test how the light emitted by the LEDs would appear when incident on 786:18-787:23 (same, and agreeing "the second set of images is the shape CDX-0011C.088 (describing second location "approximate[s] input and CX-0307i at 10-12).

"[F]or each of the red, infrared, and green LEDs," Professor Sarrafzadeh concluded "that does not receive a first shape." Tr. [Sarrafzadeh] 1116:12-16. Professor Sarrafzadeh explained:

> [W]e know that, by Lambertian emission, that shape [on the left] will change. In fact we see on the right the shape changes to more of a circular shape, as expected by Lambertian emission. ***So the shape that is – that leaves LED is different from the shape that is*** ***So it's not the first shape anymore, as required by the claim***.

Id. at 1115:2-15 (describing red LED); *id*. at 1115:16-1116:11 (stating "the light from infrared, which is a ***square shape***, … by Lambertian emission that ***changes to more of a round shape***, and we see that on the right"; and for the green LED, "[t]he light that is emitted from LED, we see that more of a square shape-ish" or a "***concave polygon***," which changes to "closer to a circle shape" or ***"convex polygon" as "it's received by***

b. Complainants and their expert have failed to show that the shape of light remains the same between the LEDs and

Complainants and Dr. Madisetti failed to show that the light emitted by each LED remains in the same "first shape" until it reaches During his direct examination, Dr. Madisetti only compared "the first shape" at the surface of the LED with the light ***omitting entirely*** any analysis of the shape of light received and acted on by the Tr. [Madisetti] 733:5-18; CDX-0011C.077 (showing the "first shape" in the first series of images, and images Tr. [Sarrafzadeh] 1119:12-20 (confirming that the first series of images "are not the shape of light as received When directly confronted with two shapes outlining (A) the first shape of light from an infrared LED, and (B) the shape incident on Dr. Madisetti testified that he "can't say" whether they "are the same shape or different shapes." Tr. [Madisetti] 782:21-783:12 ("no opinion as to whether those two shapes are the same shape or different shapes"); RDX-12.5 (outlining shapes of light emitted from LED and incident on from CX-0307iC at 17); *see also* Tr. [Madisetti] 1384:23-1385:10 (agreeing he "did not have an opinion as to whether shapes A and B on RDX-12.5 were the same shape or different shapes" though they were "images from [his] testing in this case"). Thus, Dr. Venugopal's and Professor Sarrafzadeh's testimony that does not receive—and therefore cannot change—"the first shape" emitted by the LEDs is ***undisputed and unrebutted***.

Instead, Dr. Madisetti argued that "claim 9 and claim 27 do not require the material to receive light in the same shape that was emitted by the LEDs." Tr. [Madisetti] 746:13-747:2. Rather than analyzing claim language, Dr. Madisetti pointed to Figure 3 of the '745 patent specification and stated that if you "look at" Figure 3, "the light emitter is not in contact with the light diffuser." *Id*. Dr. Madisetti is wrong for three reasons. ***First***, neither Apple nor Professor Sarrafzadeh stated that LEDs and the claimed "material" must be in contact for the material to receive "the first shape" emitted by the LEDs, so Dr. Madisetti's argument is inapposite. To the

[redacted]

contrary, using an LED with a circular emitting surface could have met the claim requirements even if the emitter and claimed material were spaced apart, because in such a system the light emitted by an LED and received by the "material" could have been the same circular shape notwithstanding any airgap. ***Second***, Dr. Madisetti failed to show that Figure 3 is even an embodiment of claims 1 and 20 that must be covered by the claim language. The specification never refers to Figure 3 as a 'preferred' embodiment. *See* '745 patent, 7:4-29. In fact, Figure 3 (a transmissive, fingertip sensor) is not directed to either asserted claim and lacks a "material" positioned between the LEDs "and tissue on a *wrist* of a user," as required by claim 1 and a surface "configured to allow at least a portion of light reflected from the tissue to pass through the surface," as required by claim 20. ***Third***, even if Figure 3 were a preferred embodiment (and it is not), there is no inconsistency with Apple's position because the '745 patent specification does not state that there is a 'spacing' or an 'air gap' between the LEDs and diffuser element in Figure 3. Rather, it refers to a reflector 305 "prevent[ing] ***ambient light from entering the diffuser 304***" and "prevent[ing] light piping that might occur if light from the [emitter] 302 is able to ***escape from the light diffuser 304***"—but critically does not mention unwanted light entry or escape through any spacing or gap between the LED and diffuser. '745 patent, 7:23-29. The specification's failure to mention any 'spacing' or 'air gap'—or address ambient light entry or light piping therefrom—suggests none exists in Figure 3.

2. [redacted] Is Not Configured To Change the Shape of the Light It Receives Into a "Second Shape" [1B], [20B]

The second independent reason that Complainants failed to show infringement of Limitations 1B and 20B is that the accused [redacted] is not configured to change the shape of light it receives into a different shape.

a. [redacted], and does not change light shape

Dr. Venugopal explained that the purposes of [redacted]

b. Dr. Madisetti's testing images confirm that [redacted] does not change the shape of light emitted by an LED

Professor Sarrafzadeh also compared the shape of light incident on [redacted] with the shape of light exiting [redacted] using Dr. Madisetti's own testing results. Professor Sarrafzadeh analyzed Dr. Madisetti's photographs of (1) "the first shape" of the LED light "emitted at the surface of LED" (left column); (2) the light shape "input to [redacted] or incident on [redacted] (center column); and (3) the light shape "as it exits from [redacted] (right column). Tr. [Sarrafzadeh] 1117:18-25; RDX-7.144C (grouping images from CX-307i at 10-12 into columns). Professor Sarrafzadeh explained that, despite camera artifacts in the photographs in the right column, "the input to the [redacted] shapes are more or less a circular form, and as they exit the [redacted]

[27] Dr. Madisetti agreed that two circles may overlap, or not overlap, while remaining "circles." Tr. [Madisetti] 779:20-780:11 (stating "[t]he top two circles do not overlap" and agreeing "the bottom two circles do overlap").

[redacted]

they are also more or less a circular form." Tr. [Sarrafzadeh] 1118:1-11. And, in relative terms, the differences between the "emission surface of LED" images (left column) and "[redacted] (center column) images are "fundamentally different"—whereas the light exiting [redacted] is at least "relatively the same" as, and "relatively similar" to, the light entering it. *Id*. at 1118:16-1119:3. In other words, there can be no infringement because to the extent Complainants argue that there is no shape change between the "emission surface of LED" and the [redacted] then there is certainly no shape change between the "[redacted] and the "[redacted] *i.e.*, no "change into a second shape."

Professor Sarrafzadeh also explained that the images of light after exiting [redacted] in the right column have certain "[d]ark spots in the middle and on the boundary are the parts where the camera fails to show light, but we know there is light, so the dark spots … should actually be in the corresponding color," which would further round out the shape. *Id*. at 1119:24-1120:4 (referring to RDX-7.148C, below).

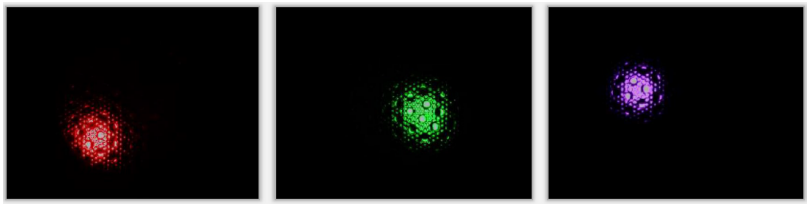

At most, these dark spots represent areas of light at a lower intensity not captured by the camera's exposure settings. The dark spots do not inform light shape, however, because intensity variations are not a change in shape. *See* Tr. (Sarrafzadeh) 1120:5-6; *e.g.*, '745 patent at 4:22-23 (distinguishing light "intensity profile" and "shape"); 8:1-14 (similar).

Dr. Madisetti failed to show that [redacted] changes the shape of light it receives into a different shape, because he did not consider the shape of light incident on, and acted upon by, [redacted] Tr. [Madisetti] 733:5-18 (comparing the "first shape" from the surface of the LED with the

shape "[redacted] As described above, any shape change to "the first shape" emitted by the LEDs observed by Dr. Madisetti was caused by the physics of Lambertian emission through an [redacted] and not caused by [redacted] In other words, the light emitted from the LED would have become circular regardless.

3. Complainants and Dr. Madisetti Have Not Proven Indirect Infringement or Infringement Under the Doctrine of Equivalents

Dr. Madisetti did not offer an opinion under the doctrine of equivalents, and therefore any such argument is waived. Dr. Madisetti also fails to show induced infringement of claims 9 and 27 because he has failed to prove direct infringement of those claims, as described above. Dr. Madisetti also offered no opinions that Apple acted with specific intent to encourage third parties ("users") to directly infringe any Asserted Claim, nor did he opine on whether Apple was aware of the patent and knew that the induced acts, if taken, would constitute infringement of the patent, nor does he offer an opinion that Apple believed there was a high probability that the acts by the alleged direct infringer infringed the patent, and the alleged infringer took deliberate steps to avoid learning of that infringement.

D. No Domestic Industry – "Technical Prong"

Complainants have failed to meet their burden of showing that any of the Masimo Watch [redacted] they relies on—CPX-0019C, CPX-0020C, CPX-0021C, CPX-0029C, CPX-0052C, CPX-0058C, CPX-0065C—or the "Masimo W1" (CPX-0146C) (collectively, the "'745 DI Articles") practice claim 18 of the '745 patent (the only claim Complainants assert) either currently or at the relevant time of the filing of the Complaint. *See Certain Set-Top Boxes*, Inv. No. 337-TA-454, Final Initial Determination at 294, 2002 WL 31556392, at *138 (June 21, 2002); Section III, *supra*. As discussed below, only two of the '745 DI Articles—CPX-0029C and CPX-0052C—are even alleged [redacted]

[redacted]

[redacted] And CPX-0029C cannot satisfy the technical prong, including because [redacted] such that it could be "configured to … determine a physiological parameter" as required by claim 18. Complainants have also failed to establish (1) ***any*** of the '745 DI Articles practice claim are in fact equipped with processors ***configured to determine a physiological parameter*** for reasons similar to those described above for the Asserted Poeze Patents; and (2) that the '745 DI Articles contain a diffusing material over the LEDs.

1. No Patent-Practicing Article Existed as of the Complaint

Complainants have admitted that CPX-0019C, CPX-0020C, CPX-0058C, CPX-0065C and CPX-0146C [redacted] Section IV.C.1. [redacted] Complainants admit CPX-0021C [redacted] Tr. [Scruggs] 461:17-25; RX-1183C.0015.

Accordingly, the only '745 DI Articles that arguably existed in their current form as of the Complaint are CPX-0052C and CPX-0029C. CPX-0052C has not been shown [redacted]. *See* Section IV.C.1. Complainants similarly allege that CPX-0029C (and CPX-0021C) practices claim 18 of the '745 patent [redacted] Tr. [Madisetti] 754:24-755:3. Similar to CPX-0052C, Complainants have not shown [redacted] Tr. [Scruggs] 464:15-465:3; RX-1183C.0037-38 (failing to identify any date that software was installed on CPX-0014 (MASITC_P_014) and confirming that CPX-0029C [redacted]

Even if the ALJ concludes that CPX-0029C and CPX-0052C can be properly considered, they still cannot satisfy the technical prong because Complainants have failed to show that they (or the other '745 DI Articles) have a "processor configured to … determine a physiological parameter"—In fact CPX-0029C Tr. [Scruggs] 404:7-19; 405:1-7. As discussed further below, Complainants have also failed to show these and other '745 DI Articles meet the separate limitation of having "a light diffusing material."

2. The Alleged '745 DI Articles Do Not Practice Claim 18

a. The Alleged '745 DI Articles Lack "A Light Diffusing Material Configured To Be Positioned Between The Plurality Of Light-Emitting Diodes…" [15B]

Complainants have failed to show that any of the '745 DI Articles have a "light diffusing material." Dr. Madisetti relied solely on photos of the articles, images generated from CAD files, and his "personal inspect[ion]" of the articles to conclude this limitation was satisfied. Tr. [Madisetti] 751:12-752:2; 760:18-22; CDX-0011C.099. But as Professor Sarrafzadeh explained, relying on mere photographic or inspection-based evidence in this context is "unscientific" and "unreliable given that the components are actually quite small." Tr. 1127:20-1128:4 (Sarrafzadeh); RDX-0007C.0162. Moreover, as discussed above in connection with the Poeze DI Articles, the technical documentation, and in particular CAD files, that Dr. Madisetti cites . *See supra* Section IV.C.2.a.(3); *see also* Tr. [Scruggs] 467:8-18 Further, to the extent Complainants seek to rely on Mr. Scruggs' testimony that the devices (aside from the "W1") (Tr. [Scruggs] 401:6-13), that is similarly insufficient. As Professor Sarrafzadeh also explained that "

Tr. 1128:4-8 (Sarrafzadeh). Dr. Madisetti offered no opinion to the contrary. As such, there is insufficient evidence that the '745 DI Articles contain a light diffusing material.

b. The Alleged '745 DI Articles Lack "A Processor Configured To Receive And Process The Outputted At Least One Signal And Determine A Physiological Parameter Of The User Responsive To The Outputted At Least One Signal" [15H]

Complainants have failed to demonstrate that ***any*** of the '745 DI Articles ***actually measures any physiological parameter*** and therefore have failed show they satisfy the requirement of having "a processor configured to … determine a physiological parameter." As discussed above in connection with the Poeze DI Articles (Section IV.C.2.a(2)), Dr. Madisetti introduced no source code to support his opinions that they do but relied only on demonstrations.[28] In addition, as explained above in connection with the Poeze DI Articles,

See supra Section IV.C.2.a.(2)*; see also, e.g.*, Tr. [Sarrafzadeh] 1122:3-1124:23, 1125:16-1126:20; Tr. [Scruggs] 445:2-452:14; *compare* RX-1470C *with* Tr. [Scruggs] 419:8-14 Tr. [Sarrafzadeh] 1124:4-23; Tr. [Scruggs] 445:2-452:14; RX-1470C. RX-1470C; Tr. [Scruggs] 448:2-449:9. As Professor

[28] Also as discussed above, *See supra* Section IV.C.2.a.(2). [Sarrafzadeh] 1124:24-1125:11, 1126:22-1127:7. Moreover, Tr. [Sarrafzadeh] 1126:21-1127:7; RX-1397C. As noted in footnote 15, Apple intends to file a motion to reopen the evidentiary record to admit RX-1397C.

Sarrafzadeh explained Tr. [Sarrafzadeh] 1124:4-23.

The evidence at the hearing also clearly established that CPX-0021C and CPX-0029C do not practice claim 18 for the additional reason that they and therefore cannot have a processor "configured to receive and process" a signal or "determine a physiological parameter." Tr. [Scruggs] 402:22-403:2; Tr. [Sarrafzadeh] 1125:12-15. (CPX-0014). Tr. [Scruggs] 402:22-403:18. By Mr. Scruggs' own admission, Tr. [Scruggs] 403:19-404:2. Similarly, CPX-0029C does Tr. [Scruggs] 404:7-19; 405:1-7. Moreover, CPX-0021C and CPX-0029C RX-1183C.0037-38; *see* Tr. [Sarrafzadeh] 1125:12-15

Complainants have not shown that any of the '745 DI Articles practices claim 18. Tr. 1127:9-13 (Sarrafzadeh).

[redacted]

E. Invalidity

In an attempt to draft claims that would capture the Accused Apple Products while claiming priority to earlier applications, Masimo was forced to claim combinations of generic, well-known components that have been used in light-based physiological monitoring devices for decades. As discussed below, the asserted claims are invalid. A POSITA would have found it obvious to use long known components in the arrangements claimed. Moreover, the asserted claims lack written description and definiteness under § 112.

1. Obviousness Under 35 U.S.C. § 103

a. State of the Art

The ’745 patent claims a collection of long known, prior art components of physiological sensors arranged in standard and predictable ways. For example, conventional pulse oximeters, photodiodes, LEDs, materials that change the shape of light, light blocks, and optical shielding using dark-colored coating were all taught by Webster and Iwamiya. Tr. [Sarrafzadeh] 1109:18-5. Mr. Al-Ali, the sole named inventor of the ’745 patent, testified that the invention of the ’745 patent is changing the shape of the light, and he did not investigate whether prior art taught changing the shape of light. Tr. [Al-Ali] 334:9-11 (“Q. Now, sir, you consider shaping the light to be the thing that was new about the ’745 patent, correct? A. Yes.”), 335:19-24 (the ’745 patent’s invention is shaping the light into a ring shape), 327:3-328:7 (same), 335:25-336:7 (did not inspect prior art). As explained below, reshaping the light, specifically reshaping the light into a ring shape, was known in the prior art.

b. Series 0 Renders Claim 9 and Claim 27 Obvious

Apple’s own Series 0 Watch renders obvious claims 9 and 27. Apple commercially launched Apple Watch Series 0 (“Series 0”) on April 24, 2015. Tr. [Sarrafzadeh] 1090:14-23;

[redacted]

RX-0023 [Apple Press Release]; Tr. [Block] 910:22-911:2 (Series 0 was released in spring 2015); Tr. [Kiani] 138:1-4 (agreeing Series 0 was released in April 2015). Series 0 is prior art to the '745 patent under 35 U.S.C. § 102(a)(1).

(1) Claim 9

Limitation [1Preamble]: Series 0 has "***[a] physiological monitoring device comprising***" because Series 0 contains a heart rate sensor. Tr. [Sarrafzadeh] 1092:7-13; Tr. [Waydo] 937:2-8; Tr. [Land] 957:5-15; RX-0396C.0008 (discussing sensor system), .0011 (discussing heart rate sensor) .

Limitation [1A]: Series 0 has "***a plurality of light-emitting diodes configured to emit light in a first shape***." Series 0 has four LEDs that emit light in a first shape, as shown in Fig. 2 of RX-0392C. *See also* Tr. [Land] 959:3-14; Tr. [Block] 897:15-19, 897:24-898:1 (identifying RPX-5 as a Series 0 Apple Watch); RPX-5; Tr. [Venugopal] 819:1-7 (identifying green and infrared LEDs); Tr. [Sarrafzadeh] 1092:14-21.

[redacted]

Limitation [1B]: Series 0 has "***a material configured to be positioned between the plurality of light-emitting diodes and tissue on a wrist of a user when the physiological monitoring device is in use, the material configured to change the first shape into a second***

shape by which the light emitted from one or more of the plurality of light-emitting diodes is projected towards the tissue." Series 0 has Fresnel lenses that change the shape of light emitted by the infrared LEDs. Tr. [Venugopal] 819:1-7. The infrared LEDs in Series 0 (a) have a square emission surface and (b) are aligned with groves in the Fresnel lenses that change the shape of light received from the infrared LEDs into a crescent shape. *Id.* at 821:10-11 (square LEDs); Tr. [Sarrafzadeh] 1093:3-8 (explaining that light changes into a crescent shape).

RDX-7.87C (excerpt) (showing grooves' effect on light).

Dr. Venugopal, an Apple engineer who worked on the design of the Fresnel lens, explained that the grooves in the Fresnel lens change the shape of light received from the infrared LED into "a crescent shape" because the infrared LED is positioned away from the optical center of the Fresnel lens. Tr. [Venugopal] 823:4-9. The infrared LEDs off-center placement can be seen in Figure 2 of RX-0392C, below. Additionally, the Fresnel lens is positioned between the LEDs and tissue on the wrist of a user. Tr. [Sarrafzadeh] 1092:22-1093:2.

[redacted]

[redacted]

Limitation [1C]: Series 0 has "***a plurality of photodiodes configured to detect at least a portion of the light after the at least the portion of the light passes through the tissue, the plurality of photodiodes further configured to output at least one signal responsive to the detected light***." Series 0's two photodiodes, which are shown in Figure 2 of RX-0392C above, detect light after it attenuates tissue and then output a responsive signal. Tr. [Venugopal] 819:1-7 (two photodiodes are used in Series 0); Tr. [Land] 959:3-13 (photodiodes in Series 0 receive light and then send signals to a chipset); Tr. [Sarrafzadeh] 1093:9-12.

Limitation [1D]: Series 0 has "***a surface comprising a dark-colored coating, the surface configured to be positioned between the plurality of photodiodes and the tissue when the physiological monitoring device is in use, wherein an opening defined in the dark-colored coating is configured to allow at least a portion of light reflected from the tissue to pass through the surface***." RDX-7.89C shows the [redacted] back crystal of Series 0, which is positioned between the photodiodes and tissue and has openings below the photodiodes for reflected light to

[redacted]

pass through.[29] Tr. [Sarrafzadeh] 1093:13-21; Tr. [Land] 959:3-13 (apertures through the back crystal allow light to pass through to the photodiodes). The entire black zirconia back crystal is dark-colored and a first layer of it is a surface with a dark-colored coating. Tr. [Sarrafzadeh] 1093:13-21; *see also* Tr. [Sarrafzadeh] 1131:16-1132:4 ([redacted] identical in Series 0 and Series 1); Tr. [Venugopal] 846:9-14 [redacted] Tr. [Mannheimer] 1013:7-10 [redacted], a POSITA would have found it obvious to apply a dark-colored coating to the black zirconia, and doing so would be a simple and low-tech addition. *Id.*

RDX-7.89C (excerpt); *see also* RPX-5 (Series 0).

Limitation [1E]: Series 0 has "***a light block configured to prevent at least a portion of the light emitted from the plurality of light-emitting diodes from reaching the plurality of photodiodes without first reaching the tissue***." As Apple engineer Mr. Land explained, RX-0396C at Figure 6 shows the light block in Series 0, which is labeled "[redacted] Tr. [Land] 961:7-21, 959:3-13 (explaining that light block provides isolation internally, within back crystal). That

[29] While RDX-7.89C shows a Series 1, it is representative of Series 0. *See* Tr. [Sarrafzadeh] 1131:16-1132:4; Tr. [Venugopal] 846:9-14; Tr. [Mannheimer] 1013:7-10.

[redacted]

Series 0 light block shields the photodiodes from receiving LED light until after the light hits tissue and is reflected from the tissue. Tr. [Land] 961:22-962:13; Tr. [Sarrafzadeh] 1093:22-1094:3.

[redacted]

Limitation [1F]: Series 0 has "***a processor configured to receive and process the outputted at least one signal and determine a physiological parameter of the user responsive to the outputted at least one signal***." RX-0396C explains that Sensor AP, which is either a standalone processor or a part of another processor, is used to determine a pulse rate based on the photodiodes' signal. RX-0396C.0011, 0026; Tr. [Sarrafzadeh] 1094:4-9; Tr. [Land] 959:3-13 (a custom chipset processes signals from photodiodes).

Limitation [9]: Series 0 renders obvious "***[t]he physiological monitoring device of claim 1, wherein the physiological parameter comprises oxygen saturation***." Series 0 monitors a heart rate, and measuring oxygen saturation is obvious based on measuring heart rate. Tr. [Sarrafzadeh]

[redacted]

1094:10-17; RX-0396C.0011 (disclosing a heart rate sensor in Series 0). Wrist-based pulse oximeters were known in the 1990s, and it would have been within the skill of a POSITA to make a wrist-based oximeter by 1991, even if making a commercial product would have been difficult. Tr. [Sarrafzadeh] 1095:7-16.

For example, pulse oximeters have been known and commercially available since the 1970s, and pulse oximetry is the same as heart rate sensing, with the addition of comparing the amplitude of the heart rate signal at two different wavelengths of light. *Id.*; *see also id.* at 1094:10-17; RX-0035.0030 [Webster] (pulse oximeters were known); Tr. [Mehra] 852:7-17 ("Q: Did your work on the blood oxygen feature for Apple Watch have anything to do with the work that you had done on the heart sensor? A. Yes, very much so. So ***pulse oximetry as a feature is essentially heart rate sensing***, but comparing the amplitude of the signal at two different colors of light or wavelengths of light. And so all of the work that we did to design, develop, and validate heart rate sensors over multiple generations of the watch was a great engineering base for us to build off of."). Both heart rate and blood oxygen saturation sensors are photoplethysmography (PPG) sensors. Tr. [Waydo] 923:12-23. For that reason, Apple was able to draw heavily on its experience building a heart rate sensor to build a blood oxygen saturation sensor. *Id.*

(2) Claim 27

Limitation [20P]: Series 0 has ***"[a] system configured to measure one or more physiological parameters of a user, the system comprising: a physiological monitoring device comprising***." A watch is a system, and Series 0 discloses the remaining requirements of limitation [20P] for the same reasons described regarding limitation [1P]. Tr. [Sarrafzadeh] 1095:3-6.

[redacted]

Limitations [20A]-[20F]: Limitations [20A]-[20F] are identical to limitations [1A]-[1F], so Series 0 discloses limitations [20A]-[20F] for the same reasons explained above regarding [1A]-[1F]. Tr. [Sarrafzadeh] 1094:18-1095:2.

Limitation [20G]: Series 0 has "***a processing device configured to wirelessly receive physiological parameter data from the physiological monitoring device, wherein the processing device comprises a user interface, a storage device, and a network interface configured to wirelessly communicate with the physiological monitoring device, and wherein the user interface includes a touch-screen display configured to present visual feedback responsive to the physiological parameter data***." Series 0 wirelessly communicates with an external iPhone, wherein the iPhone comprises the components necessary for wireless communication, such as a user interface, storage device, and network interface. Tr. [Sarrafzadeh] 1095:17-1096:5. An iPhone has a touch-screen display that can present visual feedback responsive to physiological parameter data via apps. *Id.*

Limitation [27]: Series 0 has "***[t]he system of claim 20, wherein at least one of the plurality of light-emitting diodes is configured to emit light of a first wavelength and at least one of the plurality of light-emitting diodes is configured to emit light of a second wavelength, the second wavelength being different than the first wavelength***." RX-0392C.0006 shows the green and infrared LEDs of Series 0, wherein green and infrared are different wavelengths of light. Tr. [Land] 959:3-13 (LEDs of different wavelengths were used in Series 0); Tr. [Venugopal] 819:1-7 (green and infrared LEDs); Tr. [Sarrafzadeh] 1096:6-10.

[redacted]

c. Iwamiya In View of Sarantos Render Claim 9 Obvious

U.S. Patent No. 8,670,819 ("Iwamiya") (RX-0130) in combination with U.S. Patent No. 9,392,946 ("Sarantos") (RX-0366) renders claim 9 obvious. Tr. [Sarrafzadeh] 1098:5-7. Claim 9 depends from independent claim 1.

Limitation [1P]: Complainants do not dispute that Iwamiya discloses "***[a] physiological monitoring device comprising***." Tr. [Madisetti] 1359:8-1365:6. As described in its Abstract, Iwamiya discloses an "optical biological information detecting apparatus," which is a physiological monitoring device. Tr. [Sarrafzadeh] 1098:8-12.

Limitation [1A]: Complainants do not dispute that Iwamiya discloses "***a plurality of light-emitting diodes configured to emit light in a first shape***." Tr. [Madisetti] 1359:8-1365:6. Figure 4 of Iwamiya shows the light emitting units 6. RX-0130 [Iwamiya] at 6:7-11; Tr. [Sarrafzadeh] 1098:13-18.

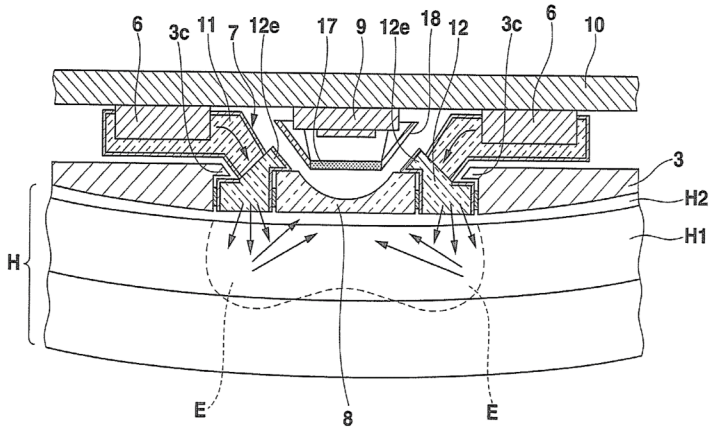

FIG.4

RX-0130 [Iwamiya] at Fig. 4.

Limitation [1B]: Complainants do not dispute that Iwamiya discloses "***a material configured to be positioned between the plurality of light-emitting diodes and tissue on a wrist***

[redacted]

of a user when the physiological monitoring device is in use, the material configured to change the first shape into a second shape by which the light emitted from one or more of the plurality of light-emitting diodes is projected towards the tissue." Tr. [Madisetti] 1359:8-1365:6. Iwamiya discloses annular light guide 7, which as shown in Figure 4 is positioned between LEDs 6 and the tissue H of the wrist of a user. RX-0130 [Iwamiya] at 6:22-31 (LEDs and photodiodes are mounted on a circuit board that is part of a wristwatch). Light guide 7 is a material that diffuses and irradiates light from the light's initial emitted shape into a second annular shape, wherein the light is projected toward the tissue in an annular shape. RX-0130 [Iwamiya] at 6:11-14; Tr. [Sarrafzadeh] 1098:19-1099:2.

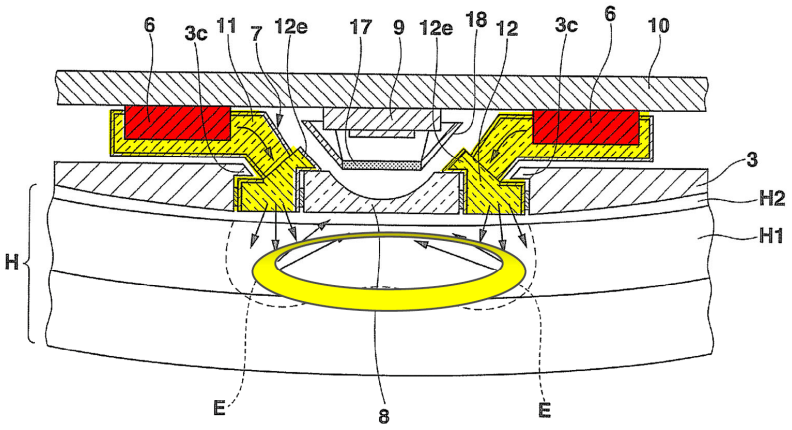

FIG.4

RDX-7.101C (excerpt) (annotated Fig. 4 from RX-0130)

<u>Limitation [1C]</u>: Complainants do not dispute that Iwamiya discloses "***a plurality of photodiodes configured to detect at least a portion of the light after the at least the portion of the light passes through the tissue, the plurality of photodiodes further configured to output at least one signal responsive to the detected light***." Tr. [Madisetti] 1359:8-1365:6. Iwamiya teaches plural light receiving units 9, which are silicon photodiodes that output a signal responsive

[redacted]

to light reflected from a user's tissue. RX-0130 [Iwamiya] at 8:20-23, 14:36-39, Fig. 4; Tr. [Sarrafzadeh] 1099:3-6 (silicon photodiodes), 1105:12-16 (multiple photodiodes).

Limitation [1D]: Iwamiya alone or in combination with Sarantos discloses "***a surface comprising a dark-colored coating, the surface configured to be positioned between the plurality of photodiodes and the tissue when the physiological monitoring device is in use, wherein an opening defined in the dark-colored coating is configured to allow at least a portion of light reflected from the tissue to pass through the surface***." Iwamiya discloses light shielding frame 18, which a POSITA would have found obvious to implement with a dark-colored coating. RX-0130 [Iwamiya] at 8:38-42, Fig. 4; Tr. [Sarrafzadeh] 1099:7-15. For example, Sarantos specifically discloses such a surface with a dark-colored coating: Sarantos discloses an in-mold label or other black or opaque coating, such as a painted mask, which is used to prevent stray light from reaching photodiodes. RX-0366 [Sarantos] at 17:6-16, Fig. 22; Tr. [Sarrafzadeh] 1099:7-15.

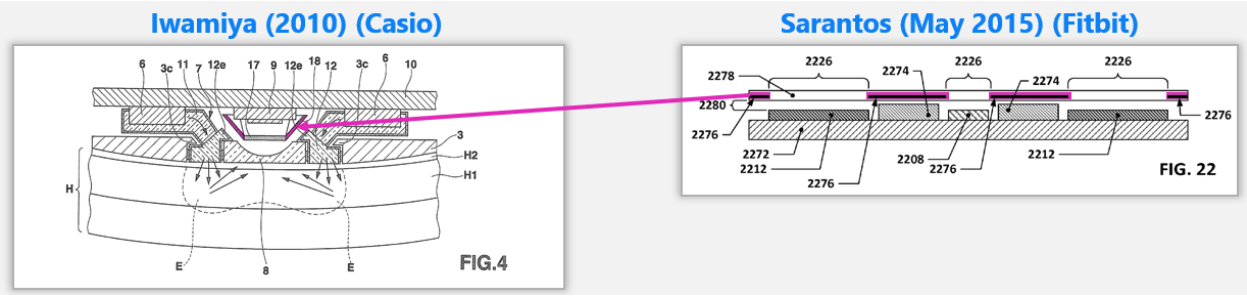

RDX-7.103C (excerpt) (annotated figures from RX-0130, RX-0366)

A POSITA would have been motivated to combine Iwamiya with Sarantos because they are both physiological monitoring devices in the same field as the '745 patent. Tr. [Sarrafzadeh] 1100:15-20. Furthermore, the sensors of Iwamiya and Sarantos are both wrist-worn physiological devices. RX-0130 [Iwamiya] at 25:47-49; RX-0366 [Sarantos] at Fig. 2; Tr. [Sarrafzadeh] 1100:15-20 (explaining fields and wrist-worn devices of Iwamiya and Sarantos), 1096:15-22 (explaining Iwamiya), 1096:23-1097:3 (explaining Sarantos).

[redacted]

A POSITA would have been motivated to use Sarantos's surface with a dark-colored coating in Iwamiya at the time of the application for the '745 patent. Specifically, a POSITA would have been motivated to implement light shielding frame 18 of Iwamiya as a surface with a dark-colored coating to enhance the light shielding function. Tr. [Sarrafzadeh] 1100:21-1101:4; RX-0130 [Iwamiya] at Fig. 4 (showing light shielding frame 18); RX-0366 [Sarantos] at 17:12-16 ("Regardless of which technique is used, the in-mold label 2276 or ***the masking may prevent stray light from other sources, e.g., ambient light, from reaching the HAR photodetector elements 2212 and affecting the heart rate signal obtained by the PPG sensor***."). As Webster explains, dark materials should be used to prevent unwanted transmission of light and improve the accuracy of oximetry readings. Tr. [Sarrafzadeh] 1100:21-1101:4; RX-0035 [Webster] at 0202 ("***Oximeter probes should be manufactured of black opaque material that does not transmit light***, or enclosed in an opaque plastic housing. Although there is no substitute for continual vigilance, ***shielding the probes from excessive ambient light, as strongly recommended by the manufacturer, will reduce the possibility of false readings***.").

A POSITA would have been motivated to use Sarantos' surface with a dark-colored coating in Iwamiya at the time of the application for the '745 patent and would have had a reasonable expectation of success because incorporating a surface with a dark-colored coating into a light shield is a low cost and low-tech addition that was known, as shown by Webster and Sarantos. RX-0366 [Sarantos] at 17:12-16; RX-0035.0202 [Webster]; Tr. [Sarrafzadeh] 1101:5-10.

Limitation [1E]: Complainants do not dispute that Iwamiya discloses "***a light block configured to prevent at least a portion of the light emitted from the plurality of light-emitting diodes from reaching the plurality of photodiodes without first reaching the tissue***." Tr. [Madisetti] 1359:8-1365:6. First and second reflection layers 13 and 15 are light blocks that

[redacted]

prevent light emitted from LEDs 6 from leaking from portions of annular light guide 7. RX-0130 [Iwamiya] at 6:67-7:3, 7:45-49, Fig. 3. Professor Sarrafzadeh explained that the reflection layers prevent light from reaching the photodiodes without first reaching the tissue. Tr. [Sarrafzadeh] 1099:16-21.

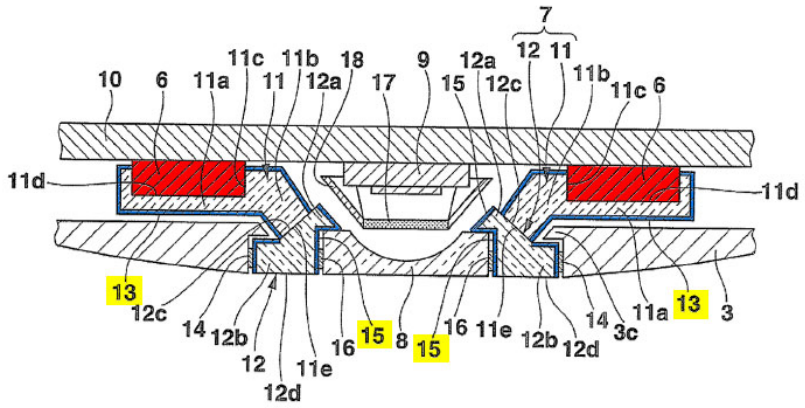

FIG.3

RDX-7.104C (excerpt) (annotated Fig. 3 from RX-0130)

Limitation [1F]: Complainants do not dispute that Iwamiya discloses "***a processor configured to receive and process the outputted at least one signal and determine a physiological parameter of the user responsive to the outputted at least one signal***." Tr. [Madisetti] 1359:8-1365:6. Iwamiya discloses CPU 20, which receives a signal from the photodiodes and determines biological information of a user based on the signal. RX-0130 [Iwamiya] at 9:40-43, Fig. 10; Tr. [Sarrafzadeh] 1099:22-1100:1.

[redacted]

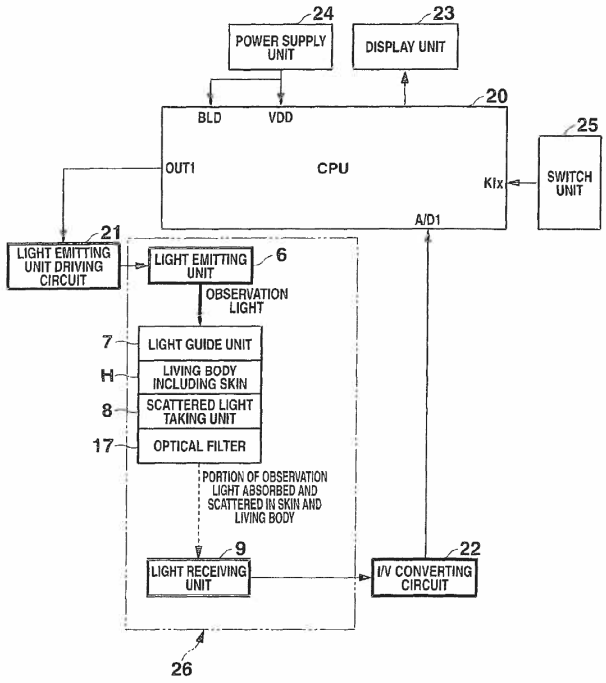

FIG.10

RX-0130 [Iwamiya] at Fig. 10

Claim 9: Iwamiya alone or in combination with Sarantos discloses *"**[t]he physiological monitoring device of claim 1, wherein the physiological parameter comprises oxygen saturation**."* Iwamiya renders claim 9 obvious because Iwamiya teaches measuring biological information, and oxygen saturation is one type of biological information. RX-0130 [Iwamiya] at 9:1-7; Tr. [Sarrafzadeh] 1100:2-8.

Iwamiya in combination with Sarantos also discloses claim 9 because Sarantos explicitly teaches a sensor that can measure oxygen saturation. Specifically, Sarantos discloses both a heart rate sensor and an oxygen saturation sensor, explaining that PPG techniques "may also be used to measure other physiological parameters besides heart rate, such as ***blood oxygenation levels***." RX-0366 [Sarantos] at 13:44-47; Tr. [Sarrafzadeh] 1100:9-14.

[redacted]

A POSITA would have been motivated to combine Sarantos and Iwamiya for the reasons described above regarding limitation [1D]. Tr. [Sarrafzadeh] 1100:15-20 (Iwamiya and Sarantos are physiological wrist-worn devices in the same field as the '745 patent). Specifically, a POSITA would have been motivated to combine Sarantos's teaching of a blood oxygen measurement with Iwamiya's teaching of measuring biological information, such as a pulse wave (*i.e.*, a heart rate), at the time of the application for the '745 patent: Sarantos teaches that a PPG sensor that is used to determine a heart rate can be used to determine a blood oxygenation level, and using Iwamiya's sensor to measure a blood oxygenation level would enhance Iwamiya's sensor. Tr. [Sarrafzadeh] 1101:11-19; RX-0130 [Iwamiya] at 9:1-7; RX-0366 [Sarantos] at 13:44-47.

A POSITA would have a reasonable expectation of success in combining Sarantos's teaching of a blood oxygen measurement with Iwamiya's teaching of measuring biological information at the time of the application for the '745 patent because pulse oximeters, including reflectance wrist-worn pulse oximeters, for measuring blood oxygen were known by the time of the application for the '745 patent, as shown by Sarantos and other literature. Tr. [Sarrafzadeh] 1101:20-1102:1; RX-0366 [Sarantos] at 13:44-47. As described by Sarantos and Apple engineers, PPG techniques were known to measure both a heart rate and a blood oxygen level, and a blood oxygen measurement comprises taking a heart rate measurement at different wavelengths. Tr. [Sarrafzadeh] 1101:11-19 (Sarantos explains that feature of taking a blood oxygen level can be added to a PPG sensor); RX-0366 [Sarantos] at 13:44-47; Tr. [Mehra] 852:7-17 ("pulse oximetry as a feature is essentially heart rate sensing"); Tr. [Waydo] 923:12-23 (both heart rate and blood oxygen saturation sensors are PPG sensors).

[redacted]

d. Iwamiya In View of Sarantos and Venkatraman Render Claims 18 and 27 Obvious

Iwamiya in combination with Sarantos and U.S. Patent No. 8,998,815 ("Venkatraman") (RX-0368) renders claims 18 and 27 obvious. Tr. [Sarrafzadeh] 1102:13-18.

(a) Claim 18

Claim 18 depends from independent claim 15.

Limitation [15P]: Complainants do not dispute that Iwamiya discloses "***[a] physiological monitoring device comprising.***" Tr. [Madisetti] 1359:8-1365:6. Iwamiya discloses [15P] for the reasons given above for the preamble of claim 1. Tr. [Sarrafzadeh] 1102:24-1103:3.

Limitation [15A]: Complainants do not dispute that Iwamiya discloses "***a plurality of light-emitting diodes configured to emit light proximate a wrist of a user.***" Tr. [Madisetti] 1359:8-1365:6. Iwamiya discloses [15A] for the reasons given above with respect to limitation [1A]. Tr. [Sarrafzadeh] 1103:4-8. Additionally, Iwamiya teaches a wrist-worn physiological device, so the LEDs emit light proximate a user's wrist. *Id.*, RX-0130 [Iwamiya] at Fig. 4, 5:54-56.

Limitation [15B]: Complainants do not dispute that Iwamiya discloses "***a light diffusing material configured to be positioned between the plurality of light-emitting diodes and a tissue measurement site on the wrist of the user when the physiological monitoring device is in use.***" Tr. [Madisetti] 1359:8-1365:6. Iwamiya discloses [15B] for the reasons given above with respect to limitation [1B] regarding light guide 7, which diffuses light. Tr. [Sarrafzadeh] 1103:9-15.

Limitation [15C]: Complainants do not dispute that Iwamiya discloses "***a light block having a circular shape***." Tr. [Madisetti] 1359:8-1365:6. For the reasons explained above for limitation [1E], Iwamiya's reflection layers 13 and 15 are a light block. Tr. [Sarrafzadeh] 1103:16-21. Reflection layers 13 and 15 have a circular shape, as shown in Iwamiya's Figures 2 and 3. *Id.*

[redacted]

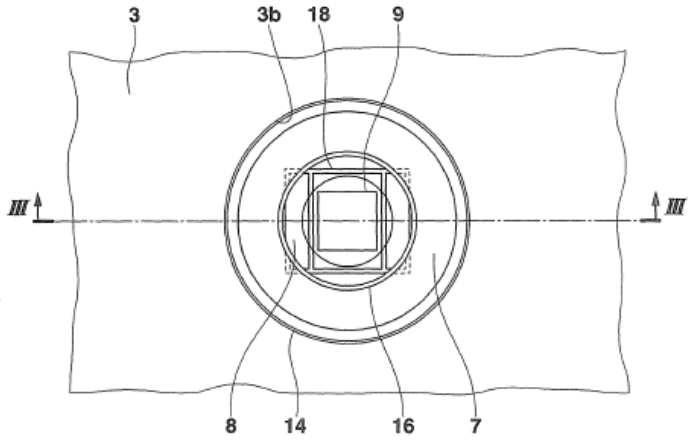

FIG.2

RX-0130 [Iwamiya] at Fig. 2

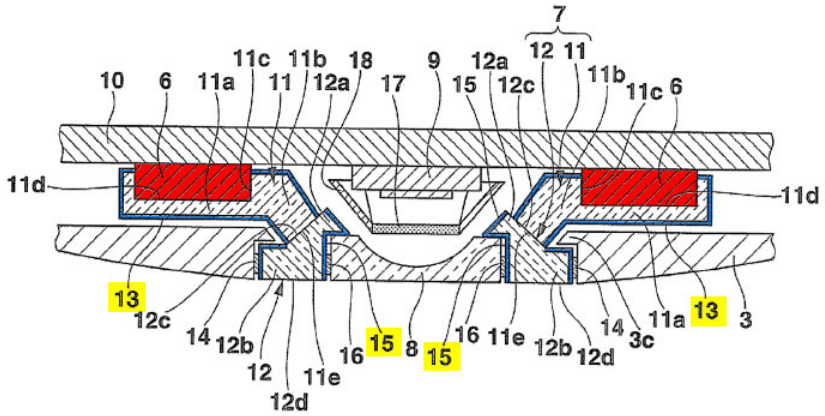

FIG.3

RDX-7.117C (excerpt) (annotated Fig. 3 of RX-0130)

Limitation [15D]: While limitation [15D] is indefinite, under Complainants' interpretation, Iwamiya discloses "***a plurality of photodiodes configured to detect at least a portion of the light emitted from the plurality of light-emitting diodes after the light passes through the light diffusing material and a portion of the tissue measurement site encircled by the light block, wherein the plurality of photodiodes are arranged in an array having a spatial***

[redacted]

configuration corresponding to a shape of the portion of the tissue measurement site encircled by the light block." Tr. [Sarrafzadeh] 1103:22-1104:5. As explained above for limitation [1E], Iwamiya discloses a plurality of photodiodes that detect light that has passed through diffusing material and the tissue measurement site. Under Complainants' interpretation of limitation [15D], Iwamiya's photodiodes are arranged in a shape that corresponds to the shape of the portion of tissue measurement encircled by the light block. *Id.*; RX-0130 [Iwamiya] at 8:20-23 (disclosing photodiodes); 14:39-41 (explaining that, as seen in Figure 3 above, photodiodes are "***disposed on the same circumference*** centered on an optical axis of the scattered light taking unit 8").

Limitation [15E]: Complainants do not dispute that Iwamiya discloses "***wherein the plurality of photodiodes are further configured to output at least one signal responsive to the detected light.***" Tr. [Madisetti] 1359:8-1365:6. Iwamiya discloses limitation [15E] for the same reasons described above for limitation [1C]. Tr. [Sarrafzadeh] 1104:6-9.

Limitation [15F]: Complainants do not dispute that Iwamiya discloses "***wherein the plurality of light-emitting diodes and the plurality of photodiodes are arranged in a reflectance measurement configuration***." Tr. [Madisetti] 1359:8-1365:6. Referring to Figure 4 of Iwamiya, Professor Sarrafzadeh explained that the photodiodes and LEDs are on the same side of the tissue and thereby arranged in a reflectance measurement configuration. Tr. [Sarrafzadeh] 1104:10-17.

Limitation [15G]: Complainants do not dispute that Iwamiya discloses "***wherein the light block is configured to optically isolate the plurality of light-emitting diodes from the plurality of photodiodes by preventing at least a portion of light emitted from the plurality of light-emitting diodes from reaching the plurality of photodiodes without first reaching the portion of the tissue measurement site.***" Tr. [Madisetti] 1359:8-1365:6. Iwamiya discloses [15G] for the same reasons

[redacted]

as limitation [1E]; reflection layers 13 and 15 serve as light blocks that provide the recited optical isolation. Tr. [Sarrafzadeh] 1104:18-23.

Limitation [15H]: Complainants do not dispute that Iwamiya discloses "***a processor configured to receive and process the outputted at least one signal and determine a physiological parameter of the user responsive to the outputted at least one signal.***" Tr. [Madisetti] 1359:8-1365:6. Iwamiya discloses [15H] for the reasons given above with respect to limitation [1F], wherein Iwamiya discloses a CPU that determines biological information of a user based on signals received from photodiodes. Tr. [Sarrafzadeh] 1104:24-1105:4.

Limitation [15I]: Complainants do not dispute that Iwamiya in combination with Venkatraman discloses "***wherein the physiological monitoring device is configured to transmit physiological parameter data to a separate processor.***" Tr. [Madisetti] 1359:8-1365:6. Professor Sarrafzadeh explained that Venkatraman discloses a generic secondary electronic device, which can be a cell phone such as an iPhone, and discusses how the physiological monitoring device transmits data to a secondary device. Tr. [Sarrafzadeh] 1105:5-11.

A POSITA would have found it obvious to combine Iwamiya with Venkatraman at the time of the application for the '745 patent because both references teach a wrist-worn physiological device. Tr. [Sarrafzadeh] 1105:17-23 (both Iwamiya and Venkatraman are wristwatches), 1096:15-22 (Iwamiya is a physiological sensor); RX-0130 [Iwamiya] at 25:47-49 (wristwatch), 9:1-7 (physiological measurements of biological information, including a heart rate); RX-0368 [Venkatraman] at Fig 7 (wristwatch). Venkatraman describes a wristwatch wearable heart rate sensor and a secondary device, such as a smartphone, that communicates with the wristwatch. Tr. [Sarrafzadeh] 1102:1-12 (describing Venkatraman); RX-0368 [Venkatraman] at Title, Abstract. A POSITA would have been motivated to combine Iwamiya with Venkatraman at the time of the

[redacted]

application for the '745 patent in order to enhance the wristwatch of Iwamiya by adding an external connection to a smartphone or other processing device. Tr. [Sarrafzadeh] 1105:24-1106:7; RX-0368 [Venkatraman] at 57:42-44 ("An app on the smart phone may facilitate and/or enable the smartphone to act as a user interface to the biometric monitoring device.").

A POSITA would have had a reasonable expectation of success in combining Iwamiya with Venkatraman at the time of the application for the '745 patent because using an external device with a separate processor with a physiological monitoring device was known. Tr. [Sarrafzadeh] 1106:8-11; RX-0368 [Venkatraman] at 57:42-44.

Claim 18: Iwamiya alone or in combination with Sarantos discloses "***[t]he physiological monitoring device of claim 15, wherein the physiological parameter comprises oxygen saturation***" for the same reasons described regarding claim 9. Tr. [Sarrafzadeh] 1106:12-17 (Iwamiya alone); Tr. [Sarrafzadeh] 1106:18-23 (Iwamiya in combination with Sarantos).

(b) Claim 27

Claim 27 depends from independent claim 20.

Limitations [20P]-[20F]: The same analysis described above for limitations [1P]-[1F] applies to limitations [20P]-[20F]. Therefore, Iwamiya alone or in combination with Sarantos discloses limitations [20P]-[20F]. Tr. [Sarrafzadeh] 1107:17-25.

Limitation [20G]: Complainants do not dispute that Iwamiya in combination with Venkatraman disclose "***a processing device configured to wirelessly receive physiological parameter data from the physiological monitoring device, wherein the processing device comprises a user interface, a storage device, and a network interface configured to wirelessly communicate with the physiological monitoring device, and wherein the user interface includes a touch-screen display configured to present visual feedback responsive to the physiological***

[redacted]

parameter data." Tr. [Madisetti] 1359:8-1365:6. Venkatraman discloses a wristwatch sensor that communicates with a smartphone, which includes a touch screen, storage device, network interface, and the other requirements of [20G]. Tr. [Sarrafzadeh] 1108:1-8; RX-0368 [Venkatraman] at 31:7-16 ("The communication between the biometric monitoring device and the secondary device may be provided through wired communication interfaces or though ***wireless communication interfaces and protocols*** . . . ."), 57:42-44 ("An app on the smart phone may facilitate and/or ***enable the smartphone to act as a user interface to the biometric monitoring device***."), 55:36-38 ("Another user input method may be through the use of a button such as, but not limited to, ***capacitive touch buttons***, capacitive screen buttons, and mechanical buttons.").

For the same reasons explained above for claim 18, a POSITA would have found it obvious to use Venkatraman's secondary device, *e.g.*, a smartphone, with Iwamiya's wristwatch sensor, would have been motivated to do so, and would have had a reasonable expectation of success in doing so.

Limitation [27]: Iwamiya in combination with Sarantos discloses "***[t]he system of claim 20, wherein at least one of the plurality of light-emitting diodes is configured to emit light of a first wavelength and at least one of the plurality of light-emitting diodes is configured to emit light of a second wavelength, the second wavelength being different than the first wavelength***." Sarantos explicitly discloses that "it may be desirable to include separate light-emitting devices that are each able to emit different wavelengths of light." RX0366 [Sarantos] at 13:44-58; Tr. [Sarrafzadeh] 1108:24-1109:6.

As explained above regarding limitation [1D], Professor Sarrafzadeh explained why a POSITA would have found it obvious to combine Iwamiya with Sarantos at the time of the '745 patent. A POSITA would have been motivated to combine Sarantos's teaching of emitting

[redacted]

multiple wavelengths with Iwamiya's sensor in order to allow Iwamiya's sensor to emit multiple wavelengths, and a POSITA would have reasonably expected success because biological monitoring devices that emit light at multiple wavelengths was well-known for years and present in literature such as the Webster textbook. Tr. [Sarrafzadeh] 1109:13-17; Webster at Title (disclosing pulse oximeters). As explained above regarding claim 9, a POSITA would have been motivated to use Iwamiya's sensor to measure a blood oxygen level and would have reasonably expected success. Measuring a blood oxygen level requires emitting multiple wavelengths of light. *See* Tr. [Venugopal] 826:21-827:21 (pulse oximetry requires two wavelengths).

e. No Secondary Considerations of Non-Obviousness

No long-felt but unmet need. No long-felt but unmet need existed because the '745 patent disclosed well-known devices and components. Tr. [Sarrafzadeh] 1109:18-1110:5; *see also, e.g.*, RX-0130 [Iwamiya] at 6:11-14; RX-0366 [Sarantos] at 17:6-16, 13:44-47. For example, conventional pulse oximeters, photodiodes, LEDs, materials that change the shape of light, processors, light blocks, and optical shielding using dark-colored coatings were known and disclosed by prior art such as Webster and Iwamiya among others. *Id.*

[redacted]

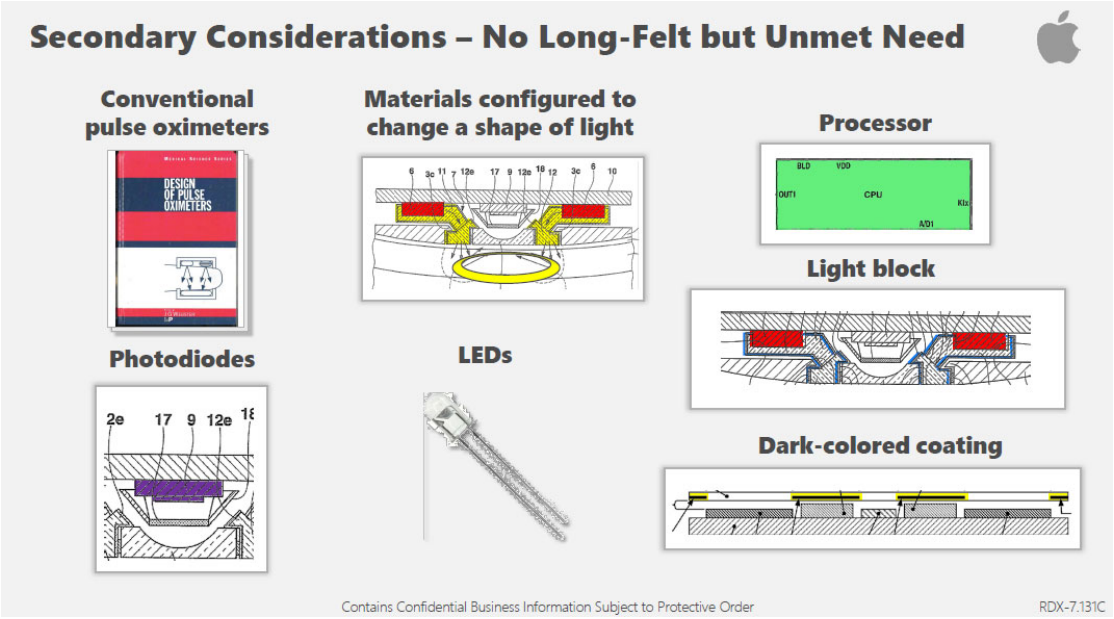

RDX-7.131C (summarizing RX-0130, RX-0366, RX-0458)

No failure of others. Complainants have not shown others had failed to achieve the claimed invention as of the alleged priority date of the '745 patent of July 2, 2015. Tr. [Sarrafzadeh] 1110:11-14. As Series 0 and Iwamiya exemplify, the alleged invention of the '745 patent of reshaping the light was known. *See* Tr. [Al-Ali] 334:9-11 (sole named inventor of '745 patent stating that claimed invention was reshaping the light). As explained above in Section IV.D.1.d, Apple's efforts developing a blood oxygen feature within the context of Apple Watch with all its other features and Apple's exacting aesthetic standards are not indicative of failure of others to achieve the alleged invention of the '745 patent.

No commercial success or industry praise. There is no commercial success or industry praise indicative of non-obviousness as it relates to the '745 patent and the Accused Apple Watches. Tr. [Sarrafzadeh] 1110:6-14; *see* Section IV.D.1.d, *supra* (Apple Watch offers many features and there is no evidence the accused blood oxygen feature drives commercial success; to the extent any commercial success is due to concepts discussed in the '745 patent, those concepts

[redacted]

were present in the prior art). As explained above, Complainants do not allege that the Masimo Watch—the only Masimo product alleged to practice the '745 patent—has been commercially successful. Section IV.D.1.d, *supra*.

No evidence of industry skepticism or unexpected results. Complainants have not shown any relevant skepticism or unexpected results. Tr. [Sarrafzadeh] 1110:11-14. While Dr. Madisetti testified there was industry skepticism "measuring pulse oxygenation at the wrist," wrist-based pulse oximeters were known in the 1990s, and it would have been within the skill of a POSITA to make a wrist-based oximeter before the '745 patent. Tr. [Madisetti] 1371:12-1372:12; Tr. [Sarrafzadeh] 1095:7-16. As Dr. Mannheimer explained, simply adding more LEDs to Series 0 would have enabled the heart rate sensor to measure blood oxygen. Tr. [Mannheimer] 1015:9-19. But doing so would not have achieved the desired levels of reliability and accuracy or fit the design considerations that Apple sought for the Accused Apple Watches. *Id.*

No copying. Complainants have shown no evidence of copying of the '745 patent by Apple, for the same reasons that Complainants have shown no evidence of copying of the Poeze Patents, as explained above. Section IV.D.1.d, *supra*.

2. Invalidity Under 35 U.S.C. § 112

a. Claims 1 and 20 Lack Written Description

Claims 1 and 20 (and dependent claims 9 and 27, respectively) lack adequate written description support, and are invalid under 35 U.S.C. § 112(a). Tr. [Sarrafzadeh] 1110:15-23. Claim 1 and 20 each requires: (A) "a material configured to be positioned between the plurality of light-emitting diodes and tissue on a wrist of a user . . . the material configured to change the first shape into a second shape . . . " (the "Material" limitation); and (B) "a surface comprising a dark-colored coating . . . wherein an opening defined in the dark-colored coating is configured to allow

[redacted]

at least a portion of light reflected from the tissue to pass through the surface" (the "Surface" limitation). '745 patent, cls. 1, 20.

The only embodiments that teach the "Surface" limitation are transmittance oximeters. However, claims 1 and 20 require using a dark-colored coating in a reflectance configuration and the specification disclose no such embodiment. The specification describes a "light-absorbing filter 306" in conjunction with Figure 3, a fingertip sensor, and further states: "Referring to FIG. 4A, a top view of a portion of the 3D sensor 300 is provided. The light-absorbing detector filter 306 is illustrated having a top surface coated with a light-absorbing material. The light-absorbing material can be a black opaque material or coating or any other dark color or coating configured to absorb light." *Id.* at 8:32-35, 9:31-36. This description does not associate transmittance oximeters with wrist-based, or reflectance, monitoring. *See* Tr. [Sarrafzadeh] 1110:15-1111:2. The embodiment in Figure 7A, which could be positioned above a wrist, is a reflectance oximeter and notably lacks a "light absorbing detector filter 306 [] having a top surface coated with a light-absorbing material." '745 patent at 9:31-36. The disparate portions of the specification, separately referring to a reflectance oximeter and transmittance oximeters, do not satisfy 35 U.S.C. § 112(a). Tr. [Sarrafzadeh] 1110:15-1111:2; s*ee also, e.g.*, *Novozymes A/S v. DuPont Nutrition Biosciences APS*, 723 F.3d 1336, 1349 (Fed. Cir. 2013) ("an amalgam of disclosures plucked selectively from" an application does not satisfy 35 U.S.C. § 112 because no disclosure described the claim "as an integrated whole"); *Flash-Control, LLC v. Intel Corp.*, No. 2020-2141, 2021 WL 2944592, at *4 (Fed. Cir. July 14, 2021).

b. Claim 15 is Indefinite

Claim 15, from which claim 18 depends, requires "the plurality of photodiodes are arranged in an array having a spatial configuration corresponding to a shape of the portion of the tissue

[redacted]

measurement site encircled by the light block." The term "a spatial configuration corresponding to a shape of the portion of the tissue measurement site encircled by the light block" is invalid under 35 U.S.C. § 112 as indefinite because it is not explained in the specification, and a skilled artisan could not determine its meaning with reasonable certainty. Tr. [Sarrafzadeh] 1111:3-18.

Section 112 requires that "a patent's claims, viewed in light of the specification and prosecution history, inform those skilled in the art about the scope of the invention with reasonable certainty." *Nautilus, Inc. v. Biosig Instruments, Inc.*, 572 U.S. 898, 910 (2014). The '745 specification merely states that detectors "can be arranged in an array with a spatial configuration corresponding to the irradiated surface area." '745 patent at 9:27-30; *see also id.* at 11:38-43. The specification provides no further guidance for how to determine the spatial configuration of an array of detectors, or when a specific spatial configuration of the array "correspond[s]," or does not correspond, with the portion of the irradiated tissue. Tr. [Sarrafzadeh] 1111:3-18.

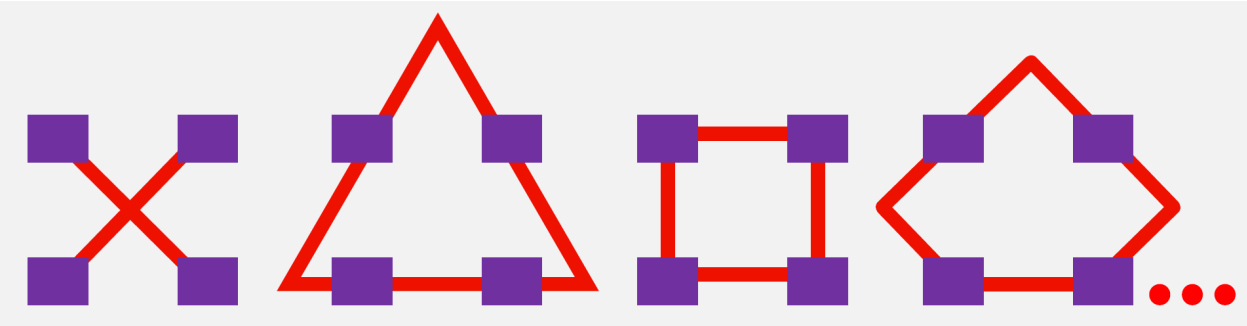

RDX-7.134C (excerpt) (showing shapes)

For example, an array of detectors arranged as four points could be connected by one or more lines forming multiple shapes, *e.g.*, a cross, a triangle, a square, and a skilled artisan would not know how to define the "spatial configuration" of such an array. *Id.* Nor would a skilled artisan know what it means for four points to "correspond[]" to a shape of the portion of the tissue measurement site encircled by the light block. *Id.* Thus, a skilled artisan would not understand the scope of the term "spatial configuration corresponding to a shape of [a/the] portion of the

[redacted]

tissue" and would be unable to "determine whether a particular product or method infringes or not." *Howmedica Osteonics Corp. v. Tranquil Prospects, Ltd.*, 401 F.3d 1367, 1371 (Fed. Cir. 2005).

F. Unenforceability (Prosecution Laches)

Complainants' claim for relief with respect to the '745 patent is barred under the doctrine of prosecution laches. Masimo filed the original provisional application that ultimately formed the basis for the '745 patent starting on July 2, 2015, after the release of the first generation of Apple Watch Series 0. Masimo spaced out its subsequent submissions over the next five years and did not file the application for the '745 patent until March 31, 2020—nearly five years after the initial application to which the '745 patent claims priority and well after Apple had already released several generations of its Watch product. This strategy allowed Masimo to wait until Apple further developed its technology and fostered the market for wearable technology, and enabled Masimo to draft its claims with earlier generations of the Accused Apple Watches in hand. Specifically, Masimo filed the following applications from July 2, 2015 to March 31, 2020:

- ***Release of Apple Watch Series 0*** (April 24, 2015);
- U.S. Patent App'x. No. 62/188,430, "Advanced Pulse Oximetry Sensor" (filed July 2, 2015);
- U.S. Patent App'x. No. 15/195,199, "Advanced Pulse Oximetry Sensor" (filed June 28, 2016);
- ***Release of Apple Watch Series 4*** (Sept. 21, 2018);
- U.S. Patent App'x. No. 16/226,249, "Advanced Pulse Oximetry Sensor" (filed Dec. 19, 2018);
- U.S. Patent App'x. No. 16/532,065, "Advanced Pulse Oximetry Sensor" (filed Aug. 5, 2019);
- ***Release of Apple Watch Series 5*** (Sept. 20, 2019);

[redacted]

- U.S. Patent App'x. No. 16/791,963, "Physiological Monitoring Devices, Systems, and Methods" (filed Feb. 14, 2020);
- U.S. Patent App'x. No. 16/835,772, "Physiological Monitoring Devices, Systems, and Methods" (filed Mar. 31, 2020).

Masimo's conduct from 2015 to 2020 does not merely show that it lacked diligence in prosecuting its patents. By apparently tying its prosecutions to Apple's product releases, Masimo intentionally and methodically delayed prosecution to allow the market for wearable technology to grow and gain the benefit of being able to draft claims following Apple's releases of its new products in that market. The fact that Masimo's delays were not isolated, but instead tracked the releases of Apple Watch products, further demonstrates that Masimo inexcusably delayed its patents. *See Symbol Techs., Inc. v. Lemelson Med., Educ. & Rsch. Found.*, 422 F.3d 1378, 1385-86 (Fed. Cir. 2005). This conduct prejudices Apple: though Masimo first filed its provisional application for the '745 patent on July 15, 2015, it did not bring this action against Apple for infringement until *six years later*. During that time, Apple invested heavily in developing Apple Watch, improving on the technology from generation to generation, and helping grow the wearable technology market.

VI. U.S. PATENT NO. 7,761,127

Years before Complainants' '127 patent, a textbook published in 1997 called *Design of Pulse Oximeters* ("Webster") taught that the operating wavelengths of LEDs can "shift … due to a change in temperature," which may cause "erroneous SpO2 readings" in pulse oximeters. RX-0035.0085 [Webster] at .0074, .0083. An obvious solution, taught by Webster, was to "have a temperature sensor built into the probe along with the LEDs and photodiode" to "compensate for LED temperature." *Id.*; RX-0406 [Cheung] Abstract, Fig. 11, 13:24-33 (teaching oximeter with temperature sensor mounted on board with LEDs "to accurately determine the wavelengths of light

[redacted]

emitted by LEDs"). Even Complainants' expert admitted that, "[b]efore the '127 patent, it was ***known to use a temperature sensor on the LED substrate to compensate for wavelength changes due to temperature***." Tr. [Goldberg] 1407:25-1408:4.

The '127 patent attempted to thread a crowded field by purportedly introducing two new elements in asserted claim 9: (1) "***a thermal mass***" that stabilizes a bulk temperature, and (2) a temperature sensor capable of "***determining a bulk temperature for the thermal mass,***" which is used to determine LED operating wavelengths. '127 patent, cl. 1; 2:59-65. But, as shown below, Complainants failed to meet their burden of showing these limitations are satisfied by the Accused Apple Watches or even their alleged domestic industry products. And, in any event, claim 9 would have been obvious to a POSITA.

First, the Accused Apple Watches do not infringe the asserted claim because they lack (1) "a thermal mass"; and (2) a temperature sensor capable of measuring "a bulk temperature for the thermal mass." Complainants simply identified [redacted] of the [redacted] printed circuit board ("PCB"), but failed to show that any component serves any thermal stabilization function, much less acts as the claimed "thermal mass" by stabilizing a bulk temperature. Both Dr. Mehra and Professor Sarrafzadeh confirmed that the identified [redacted] are too thin to stabilize a temperature. Tr. [Mehra] 883:2-12, 885:18-25; Tr. [Sarrafzadeh] 1066:4-9, 1065:16-20. Dr. Sarrafzadeh also showed that, analytically, the [redacted] of the [redacted] PCB cannot stabilize a temperature because they are [redacted] than Masimo's Early Rainbow Sensor board, which Masimo had designed to be [redacted] Tr. [Sarrafzadeh] 1066:10-1068:25. Complainants also failed to show measurement of "a bulk temperature for the thermal mass." Rather, Dr. Mehra and Professor Sarrafzadeh showed that the thermistor does not measure a "bulk temperature" of the identified [redacted] because

[redacted] CX-0322b-C [Sarrafzadeh Testing]; Tr. [Mehra] 884:7-886:12; Tr. [Sarrafzadeh] 1077:11-1078:22. In contrast, Complainants' expert Mr. Goldberg conducted no experiments to determine whether any bulk temperature is stabilized by "a thermal mass," or to determine that a thermistor measures "a bulk temperature for the thermal mass" as opposed to taking a regular, local temperature measurement just as taught by the prior art.

Second, Complainants failed to satisfy the technical prong of the domestic industry requirement for the '127 patent. Complainants failed to identify, at the hearing, which specific products or articles—that they had asserted in their First Amended Complaint, interrogatory responses, or prehearing brief as domestic industry products—fall in the categories of "Current Rainbow Sensors" or "Early Rainbow Sensors," or show the representativeness of any articles. Even on the evidence presented, Complainants failed to show any "thermal mass" that stabilizes a bulk temperature, and that a thermistor measures "a bulk temperature for the thermal mass." [redacted] *E.g.,* CX-342C at 6 (below).

[redacted]

Instead, for both infringement and domestic industry, Mr. Goldberg simply ***assumed*** that bulk temperature stabilization occurs if there are materials with some thermal properties, and that a "bulk temperature for the thermal mass" is measured if a thermistor measurement is used to compensate for wavelength shift. But such assumptions—as Professor Sarrafzadeh's testing and Mr. Diab's practice showed—are unfounded, unreliable, and insufficient.

Third, claim 9 of the '127 patent would have been obvious. If Complainants' and Mr. Goldberg's cursory approach toward infringement and domestic industry were adopted, it must also read on the prior art. *01 Communique Lab'y, Inc. v. Citrix Sys., Inc.*, 889 F.3d 735, 743 (Fed. Cir. 2018). Pulse oximeters with ceramic substrates and multilayer circuit boards with multiple layers of thermally conductive copper were known before the '127 patent. Tr. [Goldberg] 1403:13-1404:4; Tr. [Diab] 235:6-9. And it was "***known to use a temperature sensor on the LED substrate to compensate for wavelength changes due to temperature***." Tr. [Goldberg] 1407:25-1408:4. Claim 9 also would have been obvious under a proper application of the claim, because it would have been obvious to use printed circuit board with a thermal mass (Tr. [Sarrafzadeh] 1050:25-1051:12), and it would have been obvious to measure a bulk temperature for the thermal mass, for

[redacted]

example by using multiple temperature sensors at multiple locations of the thermal mass (Tr. [Sarrafzadeh] 1053:23-1054:11).

A. Level of Ordinary Skill in the Art

A POSITA at the time of the alleged invention would have possessed a working knowledge of physiological monitoring and thermal management technologies. The person would have had a Bachelor of Science degree in an academic discipline emphasizing the design of electrical and thermal technologies, in combination with training or at least one to two years of related work experience with capture and processing of data or information, including physiological monitoring technologies. Alternatively, the person could have had a Master of Science degree in a relevant academic discipline with less than a year of related work experience in the same discipline. *See* Tr. [Sarrafzadeh] 1047:17-1048:4.

B. Agreed-Upon Claim Construction: "Plurality of Operating Wavelengths" (Claim 7)

Claim Term	Agreed-Upon Construction
"plurality of operating wavelengths"	**"two or more operating wavelengths"**

C. Noninfringement

1. State of the Art

According to *Design of Pulse Oximeters*, a textbook edited by J.G. Webster and published in 1997, pulse oximetry sensors have been commercially available since at least 1983. RX-0035.0016 [Webster]; *see also* Tr. [Sarrafzadeh] 1049:1-6 ("[S]ome of the earlier history [of pulse oximetry] goes back to World War II, and first commercialization in 1973."). The basic arrangement of mounting red and infrared LEDs on a substrate, with multiple photodiodes to collect light that has passed through tissue, to determine blood oxygen saturation based on the light received, was known by at least the 1990s. *See* RX-0458.0024 [Mendelson] (depicting pulse

[redacted]

oximeter with LEDs and photodiodes on substrate); Tr. [Sarrafzadeh] 1049:14-23; 1051:1-4 ("LEDs and photodiodes are mounted on a printed circuit board"); Tr. [Goldberg] 1404:5-8 (admitting pulse oximeters with red and infrared LEDs and a photodetector mounted on same circuit board were known before the '127 patent).

It was also known by the 1990s that LED wavelengths could shift based on temperature, and to use a temperature sensor in a pulse oximeter to measure temperature and more accurately determine the wavelength of light emitted by LEDs. Webster taught that, as a law of physics, there can be "a shift in LED peak wavelength due to a change in temperature," which "can cause erroneous S_pO_2 readings," so "[o]ne way to compensate for LED temperature changes is to have a temperature sensor built into the probe along with the LEDs and photodiode." RX-0035.0085 [Webster]; *id*. at .0074, .0083 ("wavelength of emitted light in an LED depends on the forbidden energy gap E_g" which is "dependent upon temperature"); Tr. [Sarrafzadeh] 1053:8-1054:13; *id*. at 1054:20-1055:3 (dependence of operating wavelengths on temperature is "a fact of physics that has been known for many years"); *see also, e.g.,* CDX-0014.003 (noting RX-0406 [Cheung] was cited by Webster); RX-0406 [Cheung] Abstract, Fig. 11, 13:24-33 (teaching pulse oximeter with temperature sensor mounted on board with LEDs, "to produce a signal that indicates the temperature of sensor assembly 48" and "this signal … allows microcomputer 16 to accurately determine the wavelengths of the light emitted by LEDs 40 and 42 and subsequently produce an accurate determination of oxygen saturation"). Complainants' expert, Mr. Goldberg, agreed that (1) "***oximeters with temperature sensors were known*** before the '127 patent," (2) it was "***known for an oximeter to adjust its determination of oxygen level based on temperature*** before the '127 patent," and (3) "[b]efore the '127 patent, it was ***known to use a temperature sensor on the LED substrate to compensate for wavelength changes due to temperature***." Tr. [Goldberg] 1404:9-

[redacted]

11, 1405:1-4; 1407:25-1408:4. The '127 patent also recites a thermistor, which is a type of temperature sensor that has been known for decades. *Id.* at 1404:12-13; Tr. [Sarrafzadeh] 1055:19-1056:1; *see* Tr. [Mehra] 887:16-887:21 (explaining that thermistors are regularly used in thermometers or thermostats).

In an attempt to thread this crowded field, the '127 patent claimed two allegedly new limitations: (1) "***a thermal mass***" that stabilizes a bulk temperature, and (2) a temperature sensor capable of "***determining a bulk temperature for the thermal mass***." '127 patent, cl. 1; 2:59-65. But, as described below, Complainants failed to show that the Accused Apple Watches satisfy the claimed "thermal mass" or measure "a bulk temperature for thermal mass"—as opposed to simply using a temperature sensor's measurement to compensate for wavelength shift, just as the prior art Webster textbook taught. If Complainants' overbroad application of the claims and conclusory manner of proving limitations were allowed, then the asserted claims of the '127 patent would be invalid. *See 01 Communique Lab'y, Inc. v. Citrix Sys., Inc.*, 889 F.3d 735, 743 (Fed. Cir. 2018) ("[W]hen an accused product and the prior art are closely aligned, it takes exceptional linguistic dexterity to simultaneously establish infringement and evade invalidity," and "if a claim term must be broadly interpreted to read on an accused device, then this same broad construction will read on the prior art"). Complainants admit that pulse oximeters with ceramic substrates and multilayer circuit boards with multiple layers of thermally conductive copper were known before the '127 patent. Tr. [Goldberg] 1403:13-1404:4; Tr. [Diab] 235:6-9 (same). As Dr. Mehra explained, multilayer circuit boards are basic electronic components. Tr. [Mehra] 879:11-15 (learned about multilayer circuit boards in middle school). Multilayer circuit boards are simply used to carry electrical signals from one point to another using multiple layers of metal. *Id.* at 877:17-22. The asserted claims of the '127 patent are also invalid under the proper reading of the claim language.

[redacted]

See Tr. [Goldberg] 1403:24-1404:1 (admitting circuit boards with a thermal core were known before the '127 patent).

2. Claim 9 of the '127 Patent

The '127 patent was designed to fill a "need to non-invasively measure multiple physiological parameters, ***other than, or in addition to, oxygen saturation*** and pulse rate." '127 patent, 2:49-51; *see also* Tr. [Al-Ali] 330:15-20 ("Q. And the '127 patent was ***designed to measure carboxyhemoglobin and methemoglobin***, correct? A. I believe so. Q. The '127 patent does not have anything to do with SpO2, right? A. The patent itself, no."). Named inventor Mr. Diab testified, for example, that his team sought to measure "carboxyhemoglobin … with reasonable accuracy" and "figured out that we can measure [] other parameters, the methemoglobin and total hemoglobin as well." Tr. 192:11-23. Measuring parameters beyond oxygen saturation and pulse rate required using more than the standard "two" red and infrared wavelengths, so Masimo called their project to design a carboxyhemoglobin sensor "rainbow." *Id.* at 193:1-8; *id.* at 195:20-197:12 [redacted] and describing CX-818).

Complainants allege infringement of, and a domestic industry based on, claim 9, which depends from claim 7. Claim 7 requires, *inter alia*:

- [7A] "***a thermal mass***";
- [7F] "a ***temperature sensor*** thermally coupled to the thermal mass and ***capable of determining a bulk temperature for the thermal mass***, the operating wavelengths dependent on the bulk temperature"

'127 patent, cl. 7. Notably, Limitation [7F] recites three distinct elements: (1) the temperature sensor must be thermally coupled to the thermal mass; (2) the temperature sensor must be capable

[redacted]

of measuring a "bulk temperature for the thermal mass"; and (3) the "operating wavelengths" must be "dependent" upon that measurement.

"A Thermal Mass." The Abstract and Summary of Invention state that the "thermal mass" is a component that stabilizes a bulk temperature. JX-007 ['127 patent] at Abstract ("A thermal mass is disposed proximate the emitters so as to ***stabilize a bulk temperature*** for the emitters."); *id*. at 2:59-61 (same in the Summary of Invention). The specification also describes how, and for what use, the stabilization occurs: "The substrate 1200 is configured with a ***relatively significant thermal mass, which stabilizes and normalizes the bulk temperature*** so that the thermistor measurement of bulk temperature is meaningful." *Id.* at 10:67-11:4. In other words, the claimed "thermal mass" stabilizes a bulk temperature, and the thermistor is then able to meaningfully measure that "bulk temperature." *See also* Tr. [Goldberg] 614:19-23 ("[T]he substrate … is also configured with a relatively significant thermal mass, which stabilizes and normalizes the bulk temperature"); *id*. at 618:13-21 (noting "[t]he stabilization and normalization aspect of the thermal mass is [] specifically written in the patent specification to enable the bulk temperature measurement of the thermal mass"); *id*. at 643:4-12 (agreeing "the function of the thermal mass claimed in the '127 patent is to stabilize and normalize a bulk temperature"); CDX-0013C.004; Tr. [Diab] 237:10-15 (agreeing that "the thermal mass of the '127 patent stabilizes a bulk temperature"); RX-1195C [Abdul-Hafiz Dep.] 53:10-54:1 (agreeing that "the thermal mass in the '127 patent stabilizes a bulk temperature"); Tr. [Sarrafzadeh] 1069:2-1070:7 (explaining the "thermal mass … stabilizes and normalizes the bulk temperature").

The claimed "thermal mass" does not refer to the physical property of 'thermal mass' that is possessed by all objects with mass, because that would render the limitation meaningless. *Bicon, Inc. v. Straumann Co.*, 441 F.3d 945, 951 (Fed. Cir. 2006) (rejecting construction that "rendered

[limitation] meaningless" because the "limitation would never exclude any device"). Complainants' expert, Mr. Goldberg, agreed that the claimed "thermal mass" was different from the property of 'thermal mass' as a "scientific principle of physics," and would therefore not include every object in the universe or a "speck of dust." *See* Tr. [Goldberg] 639:24-640:6 (distinguishing "the thermal mass in the context of the patent" and "the thermal mass as described -- as a scientific principle of physics"); *id*. at 642:12-18 ("Q. Now the term "thermal mass" as used in the '127 patent doesn't include every object in the universe that has mass, correct? A. Correct. Q. For example, the term 'a thermal mass' as used in the '127 patent wouldn't cover a speck of dust, correct? A. It would not in my view.").

Since the claimed "thermal mass" cannot be assumed to be present merely because an object has mass, a POSITA would need to verify that an object actually stabilizes a bulk temperature as the specification describes. Mr. Diab testified that one would "need to conduct some form of experiment to determine whether an object in a physiological sensor actually stabilizes the temperature." Tr. [Diab] 238:15-19; *see also* Tr. [Sarrafzadeh] 1069:23-1070:7 (agreeing that "some form of experiment, simulation or emulation, [is needed] to determine whether an object … actually stabilizes the temperature").

"Bulk Temperature for the Thermal Mass." Limitation [7F] requires a temperature sensor capable of "determining a bulk temperature for the thermal mass"—i.e., measuring a certain temperature ***of*** the thermal mass. *See, e.g.,* JX-007 ['127 patent], cl. 7; Tr. [Goldberg] 614:12-615:4 ("The patent also expresses the fact that the thermistor measures a bulk temperature of the thermal mass"); *id*. at 618:13-21 (stabilization enables "bulk temperature measurement of the thermal mass"); CDX-0013C.004 ("The thermistor measures a 'bulk temperature' [] of the thermal

[redacted]

mass," citing '127 patent, 10:22-48); Tr. [Diab] 199:12-16 (describing "a thermistor to measure the temperature of the [] thermal mass").

Specifically, the temperature sensor measures a "***bulk*** temperature" that is different from a regular temperature measurement by a temperature sensor, which is a local temperature measurement. For example, the specification distinguishes a measurement of "bulk temperature" (T_b) from a local temperature measurement at one point on the array, e.g., the temperature of a single light emitter (T_a). *See* '127 patent, 10:32-48; *see also* RX-1195C [Abdul-Hafiz Dep.] 99:1-5 ("Local temperature is where you put the thermostat. That's a local temperature."). The named inventors confirmed the term "bulk temperature" follows the ordinary usage of the adjective "bulk," which is the majority or greater part. *E.g.*, RX-1195C [Abdul-Hafiz Dep.] 99:1-19 ("[T]he bulk temperature means … I call it the representative temperature. … I want to call it ***average***, because they do have [gradient]" or "***a representative temperature of the whole bulk***, and that's what we call bulk temperature."); RX-1200C [Diab Dep.] 137:12-20 ("[L]et's say if you measure the bulk temperature like an ***average temperature of that subject***, and within that subject, there could be variation"); *accord* Markman Hr'g Tr. at 42:6-9 (Complainants' counsel stating: "But I think it is understood … that ***people understand bulk is the vast majority***.").

3. The Accused Apple Watches Do Not Have The Claimed "Thermal Mass" [7A], [7B], [7D], [7F]

Complainants identify the [redacted] in the [redacted] printed circuit board ("PCB")—on which the LEDs and photodiodes for the Blood Oxygen feature are mounted—of being the claimed "thermal mass." *See* Tr. [Goldberg] 617:9-21 (identifying [redacted] But the [redacted] PCB are not a "thermal mass," and Mr. Goldberg failed to show that they act as a "thermal mass" as claimed.

First, Dr. Mehra, an Apple engineer who developed the module, explained that Apple Watch is an "incredibly constrained system" with multiple "different technologies … competing for the space," so his team needed to "pursue industry leading processes and state of the art techniques to make the PCB as thin as [they] did" to fit in "a very, very small overall volume." Tr. [Mehra] 877:23-878:16. Ultimately,

Id. at 880:18-24.

Accordingly, Dr. Mehra testified that, while the served an electrical function, the "were never designed to have any thermal stabilization role" and they "don't" "function to stabilize a temperature" because "[t]hey are too thin." Tr. [Mehra] 883:2-12; 885:18-25.

Professor Sarrafzadeh agreed that

Tr. [Sarrafzadeh] 1066:4-9; 1065:16-20. Professor Sarrafzadeh also compared the relative thickness of the and of the Early Rainbow Sensor copper layers, which Complainants allege practice the "thermal mass" limitation for purposes of the domestic industry, technical prong. The Early Rainbow Sensor copper layers have a thickness of 456 microns, which is

respectively. Tr. [Sarrafzadeh] 1066:10-21; Tr. [Diab] 235:14-236:1 (agreeing the "copper layers 2, 3, 4, and 5 in [the] rainbow sensor are about 456 microns thick"); *accord* Tr. [Mehra] 881:23-

882:21 (testifying that PCBs are than "multilayer circuit boards in the early 2000s").

Notably, Mr. Diab testified that Masimo designed the Early Rainbow Sensor board RX-1200C [Diab Dep.] 108:12-15; Tr. [Diab] 238:9-14 (s"). In other words, Masimo believed But, as Professor Sarrafzadeh observed, the Series 6 and Series 7 have "***more LEDs***" (13 LEDs) than the Early Rainbow Sensor ( ), yet the Series 6 and Series 7 have that are " " than the Early Rainbow Sensors—even though, based on Mr. Diab's testimony and logic, "you would expect the Apple Watches … to be even thicker" "to provide the same level of thermal stability," and "this is not the case." Tr. [Sarrafzadeh] 1066:10-1068:25; RX-0677C.0031 [ ] (depicting 13 LEDs); CX-0025.0031 [(same); *see also* CDX-0013.026C [Goldberg Demonstratives] (citing CX-397C [Early Rainbow Sensor drawing],); Tr. [Diab] 196:3-6 Therefore, the "relative thickness and relative number of LEDs" confirm that the Accused Apple Watches "do not have a thermal mass." Tr. [Sarrafzadeh] 1068:9-25.

Lastly, as further described below, Professor Sarrafzadeh performed a thermal imaging experiment and determined that the

[redacted]. [Sarrafzadeh] 1078:23-1079:14. Thus, Professor Sarrafzadeh concluded his experiment "shows that there is no thermal mass in these [redacted] boards." *Id*.

a. Complainants failed to show the Accused Apple Watches have a "thermal mass"

Mr. Goldberg failed to show that the [redacted] PCB act as the claimed "thermal mass." Despite the testimony from Mr. Diab stating that "some form of experiment" was needed "to determine whether an object in a physiological sensor actually stabilizes the temperature," Tr. [Diab] 238:15-19, Mr. Goldberg neither performed nor analyzed any such tests or experiments for the Accused Apple Watches. *See also* Tr. [Sarrafzadeh] 1069:23-1070:9 (agreeing that "some form of experiment, simulation or emulation, [is needed] to determine whether an object … actually stabilizes the temperature" but Mr. Goldberg "performed no tests, no simulation [and] no emulation"); Tr. [Goldberg] 657:4-7 (admitting he "never performed any simulation to determine whether the PCB in the [redacted] … stabilizes a bulk temperature"); *see also Yoon Ja Kim v. ConAgra Foods, Inc*., 465 F.3d 1312, 1320 (Fed. Cir. 2006) (rejecting "conclusory testimony" that expert "did not support [] with any examinations or tests of the actual accused products" and where she "did not conduct any test … to determine whether those [elements] had the required effect"); *infra* VI.D.1.a.[30] Instead, Mr. Goldberg simply observed there are [redacted]

[30] Mr. Goldberg did describe certain "Tests Showing ***Thermal Coupling***" for Limitation [7E], but did not cite those tests for Limitation [7A] or to show "a thermal mass." *See* CDX-0013C.013 [Goldberg Demonstratives] (citing test results in CX-839C at 1-3); Tr. [Goldberg] 620:17-621:15; Tr. [Sarrafzadeh] 1070:22-1071:9 ("these tests are related to thermal conductivity"); 1080:11-1081:18 (explaining Mr. Goldberg's tests at most show [redacted] but that "the tests are not reliable" because he "takes some parts out and/or he does not operate the system based on real operating conditions"). And [redacted] to the thermal mass doesn't show that the temperature sensor measures a bulk temperature," as Mr. Goldberg admitted. Tr. [Goldberg] 644:24-645:2.

[redacted] Tr. [Goldberg] 617:9-21. But Mr. Goldberg did not opine on ***what "materials"*** are relevant, ***which "thermal properties"*** are relevant, or whether and how the [redacted] PCB layers have ***sufficient "thermal properties"*** to perform a thermal function, much less show that they are sufficient to stabilize a bulk temperature. *See* Tr. [Sarrafzadeh] 1070:19-21 (concluding that Mr. Goldberg "has not" "shown that the [redacted] … stabilize a bulk temperature"); *cf. In re Mihalich*, 980 F.2d 744 (Fed. Cir. 1992) ("Because metals have widely varying thermal conductivities, the mere assertion that [component] is metal does not necessitate a conclusion that [it] discloses sufficient thermal interchange," as limitation required). Masimo simply has a complete failure of proof.

Mr. Goldberg also did not rebut Professor Sarrafzadeh's analysis. Mr. Goldberg only stated that there is a "***stabilization and normalization aspect of the thermal mass … specifically written in the patent specification*** to enable the bulk temperature measurement of the thermal mass to be used to determine the operating wavelengths of the light emitters[,] [a]nd that ***requires a balance of thermal properties***." Tr. [Goldberg] 618:6-21. But even under that view, Mr. Goldberg did nothing to show any stabilization or normalization, or what is a sufficient "balance of thermal properties" and whether they are sufficiently present in the [redacted] PCB layers.

4. The Accused Apple Watches Do Not Determine A "Bulk Temperature" [7F]

Complainants argue that the thermistor on the [redacted] module measures a "bulk temperature for the thermal mass," because it is "a single temperature that is used to estimate the operating wavelengths of all the infrared and red LEDs." Tr. [Goldberg] 621:16-622:1. [redacted] *e.g.*, RX-0414C.0015; Tr. [Mehra] 889:14-8901:6, and Complainants did not show that it measures a "bulk temperature for the thermal mass."

First, Dr. Mehra and Professor Sarrafzadeh testified that a thermistor measures temperature at an instantaneous time and in "very small" localized space. Tr. [Mehra] 888:20-24 ("measures temperature at an instantaneous moment of time when it's read out in the area where it's placed"); *id.* at 892:5-10 (thermistor measures temperature at [redacted] Apple's [redacted] Hardware Requirement Specification firmly corroborates that testimony, and it states that the [redacted] Tr. [Mehra] 890:18-23. Even Mr. Goldberg admitted that the thermistor [redacted]" Tr. [Goldberg] 645:19-646:3; *id*. at 647:17-20 (thermistors "measure the temperature in the region in which they're located").

Second, Dr. Mehra and Professor Sarrafzadeh explained that the thermistor cannot measure a bulk temperature for the thermal mass [redacted]

[redacted]

[redacted]

[redacted]

a. Complainants failed to show the Accused Apple Watches measure a "bulk temperature for the thermal mass"

Mr. Goldberg failed to identify (1) any "temperature values [measured by the thermistor] as being the measured bulk temperature for [redacted]," or (2) "a bulk temperature for the [redacted]" at any point. Tr. [Sarrafzadeh] 1083:11-22. Mr. Goldberg could not have shown that the thermistor measures a "bulk temperature" because he ***never***

conducted any thermal simulations or temperature measurements of the accused thermal mass. Tr. [Goldberg] 648:1-650:9 (agreeing none of his tests involved "thermal imaging" or measured "the temperature of multiple locations on the PCB," "showed the temperature throughout the PCB," "showed the average temperature of the PCB," or "show whether an object stabilizes and normalizes a bulk temperature"). And, therefore, Mr. Goldberg could not offer an opinion on what the "bulk temperature" of the is, and that the "bulk temperature" is the same as the local temperature measured by the thermistor. *Cf.* Tr. [Mehra] 892:11-893:6 (Complainants' counsel arguing that Dr. Mehra "has no foundation" to testify whether the thermistor measures "the average temperature of the board" because "he would need to establish that he has knowledge of the average temperature of the board and that he has made such measurements").

Instead, Mr. Goldberg cited a formula used in the operation of the Accused Apple Watches to estimate the operating wavelengths of LEDs, and asserts

Mr. Goldberg also suggests the "thermistor's measurement is a single temperature used to estimate the operating wavelengths of all the LEDs." Tr. [Goldberg] 632:17-633:12; *see also* 621:16-622:1 (similar); 661:24-662:10 (similar). That assertion has no relevance to whether the thermistor measurement is a "bulk temperature for the thermal mass"—at best, it appears to address the separate requirement that the operating wavelengths be "dependent" on the measured temperature—and moreover it is factually unsupported. While "temperature is used as one of the inputs into the algorithm that estimates the wavelength" (Tr. [Waydo] 929:14-23), Mr. Goldberg cites no evidence stating that a "single temperature" measurement is used to estimate the wavelengths "***of all*** the LEDs." Apple's engineers testified that, during a blood oxygen measurement,

D. No Domestic Industry – "Technical Prong"

Complainants rely on two categories of devices to meet the technical prong of the domestic industry requirement for the '127 patent, which Complainants term the "Current Rainbow Sensors" and the "Early Rainbow Sensors" (together, "Rainbow Sensors"). *See, e.g.,* Tr. [Goldberg] 612:20-613:3; 627:3-13; CDX-0013C [Goldberg Demonstratives] at 21 (listing two designs). At the outset, Complainants fail to describe any "articles protected by the patent." 19 U.S.C. § 1337(a)(3). The categories "Current Rainbow Sensors" and "Early Rainbow Sensors" are litigation terms, and "Rainbow" itself is just a brand name—they are not names of products or

[redacted]

articles. Complainants' First Amended Complaint listed the names of the actual products and articles on which they based their claimed domestic industry: *e.g.*, "RD rainbow® Set-2, rainbow® R1, rainbow® R25, rainbow® R20, rainbow® DCI SC 200." DocID 746189 (First Amended Complaint ("Complaint")) ¶¶ 87-89; Complaint Ex. 27 [Muhsin Decl.] ¶ 25 ("Masimo sells the following rainbow® sensors" and listing, e.g., "RD rainbow® 8 λ SpCO Adhesive Sensor" and "LNCS-II™ rainbow® DCI® 8λ SpHb"); *see also id*. ¶ 31, n.1 (noting "Masimo markets a few additional sensors under the rainbow brand" that are ***not*** claimed as practicing the '127 patent) But Complainants put forward no evidence at the hearing to: (1) identify which articles are "Early" or "Current"; (2) show that any article identified in Complainants' pleadings or contentions practices the '127 patent; or (3) prove that any particular article is representative of the so-called "Current Rainbow Sensors" or "Early Rainbow Sensors."[31]

Additionally, even on the evidence presented, Complainants fail to show that what they represent to be the "Current Rainbow Sensors" and the "Early Rainbow Sensors" practice claim 9 of the '127 patent. For each category, Complainants fail to show it has: (1) "a thermal mass"; and (2) a temperature sensor "capable of determining a bulk temperature for the thermal mass," as opposed to a regular, local temperature measurement. Named inventor Mr. Al-Ali testified that Masimo "does not have a product out with the techniques described and claimed in the '127 patent for measuring SpO_2 … that we sell." Tr. [Al-Ali] 331:17-21.

[31] Mr. Diab testified that the "RAD-57" is a "rainbow product." Tr. [Diab] 211:7-12; 217:20-24. The "RAD-57" does not suffice to identify an Early or Current Rainbow Sensor because Complainants failed to identify it in their Complaint, their response to Interrogatory No. 2 identifying domestic industry products, or their prehearing brief. CPHB at 25. Moreover, the 2018 Operating Manual for the "RAD-57" states it is a handheld "monitor" not a "sensor," and ***omits the '127 patent*** from its patent marking list. CX-0678C at 3, 15 ("monitor" to which "corresponding sensors are attached").

[redacted]

1. Complainants' "Current Rainbow Sensors" Do Not Practice Claim 9

a. No "Thermal Mass" (Limitation 7[A])

Complainants have not shown that the Current Rainbow Sensors practice the claimed "thermal mass." Mr. Goldberg's testimony regarding the Current Rainbow Sensors is as cursory as his testimony regarding the Accused Apple Watches. The sum total of Mr. Goldberg's testimony was that the [redacted] Tr. [Goldberg] 627:23-628:7 (describing CX-0590C and CX-1635C). He offered no testimony that the [redacted] And, once again, Mr. Goldberg [redacted]" as Mr. Diab testified would be necessary. Tr. [Diab] 238:19; *see also* Tr. [Sarrafzadeh] 1069:23-1070:9 (agreeing that "some form of experiment, simulation or emulation" is needed); Tr. [Goldberg] 655:9-657:7 ([redacted]); *see also Yoon Ja Kim*, 465 F.3d at 1320 (rejecting expert's conclusory testimony where expert "did not conduct any test … to determine whether [accused elements] had the required effect").

Mr. Goldberg vaguely alluded to "other supporting evidence" comprising documents that [redacted] documents that [redacted]" and unspecified "deposition testimony of Mohamed Diab." Tr. [Goldberg] 628:8-9. But Mr. Goldberg did not explain what information [redacted]

[redacted] Simply put, having [redacted] Tr. [Sarrafzadeh] 1085:3-11, but the "thermal mass" limitation "doesn't include every object" and "wouldn't cover a speck of dust," Tr. [Goldberg] 642:12-18. Mr. Goldberg consistently failed to show—experimentally or analytically—that a specific combination, amount, and configuration of properties in an identified component actually achieves a thermal function and stabilizes a bulk temperature. Mr. Goldberg's allusions to "other supporting evidence," without offering any analysis of the same, are nothing more than "[c]onclusory expert testimony … inadequate as substantial evidence." *See TQ Delta, LLC v. CISCO Sys., Inc.*, 942 F.3d 1352, 1359 n.5 (Fed. Cir. 2019). As Professor Sarrafzadeh concluded, Mr. Goldberg [redacted] Tr. [Sarrafzadeh] 1084:22-1085:10.

Mr. Goldberg's superficial observations about the Current Rainbow Sensors—and, equally, about the Early Rainbow Sensors and the Accused Apple Watches—stand in sharp contrast to Mr. Diab's testimony [redacted] Mr. Diab testified [redacted] Tr. [Diab] 200:14-201:20 (describing CX-342C at 6, below left).

Mr. Diab concluded, Tr. [Diab] 201:21-203:6 (describing CX-0342C at 30, above right). Notably, Tr. [Diab] 201:10-14 (describing CX-342C at 6), *Id*. at 201:11; 201:25 . If it were enough merely to observe the presence of with some unspecified "thermal conductivity" or unidentified "thermal properties"—as Mr. Goldberg did for the Rainbow Sensors and Accused Apple Watches—then would achieve the desired thermal stabilization. *See* Tr. [Goldberg] 617:9-21, 627:23-628:7, 628:8-9. But, of course, for purposes of showing the Rainbow Sensors or the Accused

Apple Watches satisfy the "thermal mass" limitation. Once again, Mr. Goldberg's "thermal mass" testimony amounts to a complete failure of proof.

b. No "Bulk Temperature" (Limitation 7[E])

Complainants fail to show that the Current Rainbow Sensors' temperature sensor is "capable of determining a bulk temperature for the thermal mass." Mr. Goldberg did not show any measurement of "a bulk temperature for the thermal mass." Instead, Mr. Goldberg cited CX-0430C, Tr. [Goldberg] 632:17-7. Mr. Goldberg did nothing to show that the . *See* RX-1195C-.0034 [Abdul-Hafiz] 99:1-99:5 Tr. [Goldberg] 647:18-20 . Nor could Mr. Goldberg offer sufficient testimony because he conducted . Tr. [Goldberg] 655:23; Tr. [Mehra] 892:11-893:6 (Complainants' counsel arguing that witness "has no foundation" to testify whether thermistor measures "the average temperature of " because "he would need to establish that he has knowledge of the average temperature of the board and that he has made such measurements"). Mr. Goldberg's . The portions of CPX-152C that Mr. Goldberg cites state: CDX-0013C.034 [Goldberg Demonstratives] (excerpting CPX-152C).

Professor Sarrafzadeh confirmed CX-430C shows that ," and that Mr. Goldberg Tr. [Sarrafzadeh] 1086:11-25; CX-0430C at 6

Mr. Goldberg mentioned "[o]ther supporting evidence" comprising two exhibits he did not address, and unidentified "Diab's testimony." Tr. [Goldberg] 633:8-12. Once again, Mr. Goldberg's vague listing of exhibits and testimony is, at most, "inadequate" and "[c]onclusory." *TQ Delta*, 942 F.3d at 1359 n.5. Mr. Goldberg also asserts, without citation to evidence, that Tr. [Goldberg] 633:10-12. Professor Sarrafzadeh confirmed Mr. Goldberg offers "no [] analysis or evidence" for that assertion. Tr. [Sarrafzadeh] 1087:1-4. Nor did Mr. Goldberg explain its relevance to whether "***a bulk temperature for the thermal mass***" is measured—at best, it appears to address Limitation 7[F]'s separate requirement that operating wavelengths be "dependent" on the measured temperature.

Lastly, Mr. Goldberg failed to prove that the documents he identified apply to both the Early Rainbow Sensors and Current Rainbow Sensors. Mr. Goldberg's conclusory assertion that his testimony "includ[ed] both the current and the early DI products" is inadequate. Tr. [Goldberg] 633-634:2; *TQ Delta*, 942 F.3d at 1359 n.5.

2. Complainants' "Early Rainbow Sensors" Do Not Practice Claim 9

a. No "Thermal Mass" (Limitation 7[A])

Complainants have not shown that the Early Rainbow Sensors practice the claimed "thermal mass." Mr. Goldberg's testimony regarding those sensors is equally cursory and fails to show that any component performs a thermal function or show that they stabilize a bulk temperature. Mr. Goldberg identifies Tr. [Goldberg] 628:25-629:13. Mr. Goldberg again Tr. [Diab] 238:19; Tr. [Sarrafzadeh] 1069:23-1070:9 Tr. [Goldberg] 655:9-657:7 *see also Yoon Ja Kim*, 465 F.3d at 1320 (rejecting conclusory testimony and noting failure "to determine whether [accused elements] had the required effect"). Mr. Goldberg's apparent assumption that bulk temperature stabilization —amounts to a total failure of proof. *See* § VI.D.1.a, *supra*.

Mr. Goldberg again alludes to "[o]ther supporting evidence" consisting of a "photograph," unexplained ," unidentified " ," and unspecified "Mohamed Diab's deposition and hearing testimony." Tr. [Goldberg] 629:14-18. Mr. Goldberg did not explain his opinion or reasoning regarding that "other supporting evidence." In particular, he did not explain the identity, relevance, or sufficiency of "thermal properties" for performing a thermal function, or stabilizing a bulk temperature—particularly when every object, including a speck of dust, possesses some thermal properties. *See* § VI.C.3.a, *supra*. Mr. Goldberg's allusions to "other supporting evidence" are, once again, "[c]onclusory expert testimony … inadequate as substantial evidence." *See TQ Delta*, 942 F.3d at 1359 n.5. Professor

Sarrafzadeh rightly concluded that Mr. Goldberg "did not" show that Tr. [Sarrafzadeh] 1084:22-1085:10.[32]

b. No "Bulk Temperature" (Limitation 7[E])

Mr. Goldberg did not differentiate between Current Rainbow Sensors and Early Rainbow Sensors with respect to Limitation [7E]; thus, Mr. Goldberg failed to show that the Early Rainbow Sensors measure "a bulk temperature for the thermal mass" for the same reasons described above with respect to Current Rainbow Sensors. *See* § VI.D.1.b, *supra*.

3. No Doctrine of Equivalents Infringement or Indirect Infringement

Mr. Goldberg did not opine on infringement under the doctrine of equivalents or indirect infringement. Thus, any such arguments are waived.

E. Invalidity

The '127 patent claims a collection of long known, prior art components of physiological sensors arranged in standard and predictable ways. For example, conventional pulse oximeters, photodiodes, thermistors, LEDs, LED substrates, ceramic substrates, multilayered circuit boards, circuit boards with thermal cores, LED wavelength dependence on temperature, and wavelength calibration using a temperature sensor were known. RX-0458 [Mendelson] at Fig. 10.16; RX-0035.0085 [Webster]; RX-0381 [Yamada] at [0111]; RX-0353 [Noguchi] at 1:38-50; RX-Tr. [Goldberg] 1403:13-1404:4 (substrates, circuit boards). As explained below, calibrating LED wavelengths using a thermistor on the LED substrate using a thermal mass was obvious.

---

[32] Tr. [Diab] 196:3-6; Tr. [Goldberg] 629:21-25 CX-0397C [Early Rainbow Sensor drawing] ( ). Moreover, Mr. Diab did not link his simulations to "bulk temperature" stabilization.

[redacted]

1. Invalidity Based on Obviousness Under 35 U.S.C. § 103(a)

a. Mendelson in View of Webster Render Claim 9 Obvious

"Invasive and Noninvasive Blood Gas Monitoring," an article published in 1991 by Mendelson ("Mendelson") (RX-0458) in combination with Webster, a well-known textbook in the field of pulse oximetry, renders claim 9 obvious. Tr. [Sarrafzadeh] 1056:24-1057:1, 1048:24-25 (describing Webster). As Professor Sarrafzadeh explained, the references have been known for decades; he became aware of the Mendelson and Webster publications roughly twenty years ago. *Id.* at 1048:15-16, 22-23.

Limitation [7P]: Complainants do not dispute that Mendelson discloses "***a physiological sensor capable of emitting light into tissue and producing an output signal usable to determine one or more physiological parameters of a patient, the physiological sensor comprising***." Tr. [Goldberg] 1392:12-1393:1. As shown in Fig. 10.16 below, Mendelson discloses a noninvasive reflectance SpO2 sensor. Tr. [Sarrafzadeh] 1049:9-13.

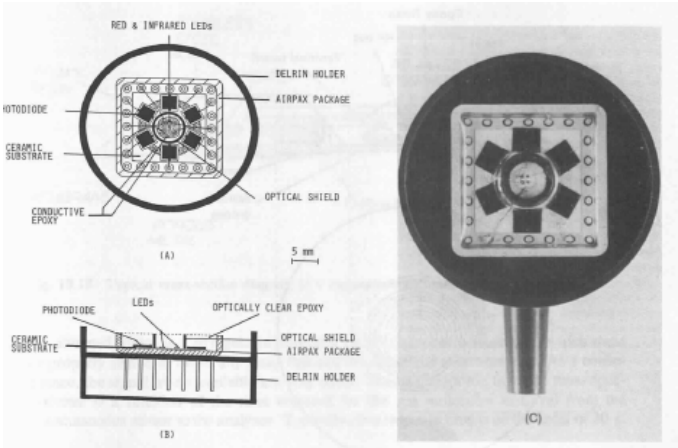

Fig. 10.16 Noninvasive reflection SaO_2 sensor.

RX-0458 [Mendelson] at Fig. 10.16

Professor Sarrafzadeh explained that pulse oximeters work by emitting red and infrared light into tissue. Tr. [Sarrafzadeh] 1049:14-23. Light shields are used around the light emitters.

[redacted]

Id. Photodiodes receive the emitted light after it has passed through the tissue, and the pulse oximeter then determines a physiological parameter based on the light received by the photodiodes. *Id.*

Limitation [7A]: Mendelson renders obvious "***a thermal mass***." As shown above in Figure 10.16, Mendelson discloses LEDs and photodiodes mounted on a ceramic substrate. Tr. [Sarrafzadeh] 1049:24-1050:3. Professor Sarrafzadeh explained that a substrate is another name for a circuit board or printed circuit board. *Id.* at 1050:4-6. A POSITA would have found it obvious to implement Mendelson's ceramic substrate as a multilayered printed circuit board with a thermal core, *i.e.* a thermal mass. *Id.* at 1050:25-1051:12. Circuit boards with thermal cores were known for many years before the '127 patent. *Id.* at 1050:7-10. For example, "The Multilayer Printed Circuit Board Handbook," a textbook from 1985 published by Scarlett ("Scarlett") (RX-0397), teaches adding an aluminum core to multilayer circuit boards for thermal management. *Id.* at 1050:11-24; RX-0397.0122 [Scarlett].

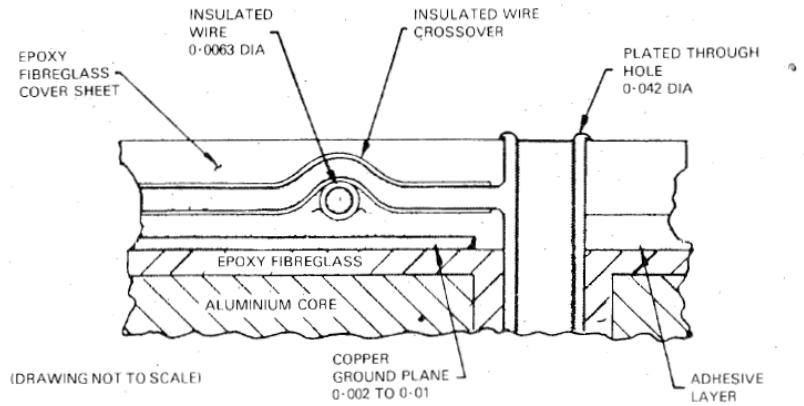

Fig. 24.30 Cross-section of a metal core MW board.

RX-0397 [Scarlett] at Fig. 24.30

Complainants' application of [7A]. Complainants contend that the [redacted] of the printed circuit boards of the Accused Apple Watches are the claimed thermal mass. Tr. [Goldberg]

617:9-21. Under that view, metal layers in Mendelson's circuit board are a thermal mass and as discussed above, Mendelson renders obvious a printed circuit board with multiple layers. Tr. [Sarrafzadeh] 1050:25-1051:12. Complainants also contend that the [redacted] of the Masimo Rainbow sensors are the claimed thermal mass. Tr. [Goldberg] 627:23-628:11 (current Rainbow sensors), 628:25-629:18 (early rainbow sensors). Again, under that view, Mendelson's metal and ceramic layers are a thermal mass and Professor Sarrafzadeh explained that Mendelson's ceramic substrate renders obvious a board with metal and/or ceramic layers. Tr. [Sarrafzadeh] 1051:17-1052:2.

Limitation [7B]: Mendelson discloses "***a plurality of light emitting sources, including a substrate of the plurality of light emitting sources, thermally coupled to the thermal mass***. Complainants do not dispute that Mendelson discloses a plurality of LEDs and a LED substrate. Tr. [Goldberg] 1392:12-1393:1. Mendelson at Figure 10.16 shows red and infrared LEDs mounted on a ceramic substrate. Tr. [Sarrafzadeh] 1052:3-8. The ceramic substrate or circuit board provides electricity to the LEDs via electrical connections, and it would have been obvious that those electrical connections also thermally couple the LEDs to the substrate, which acts as a thermal mass. *Id.* at 1050:25-1051:12; 1052:3-13. For example, the LEDs are connected by wires to the printed circuit board, and those wires provide a thermal connection between the LEDs and the board. *Id.* at 1052:9-13.

[redacted]

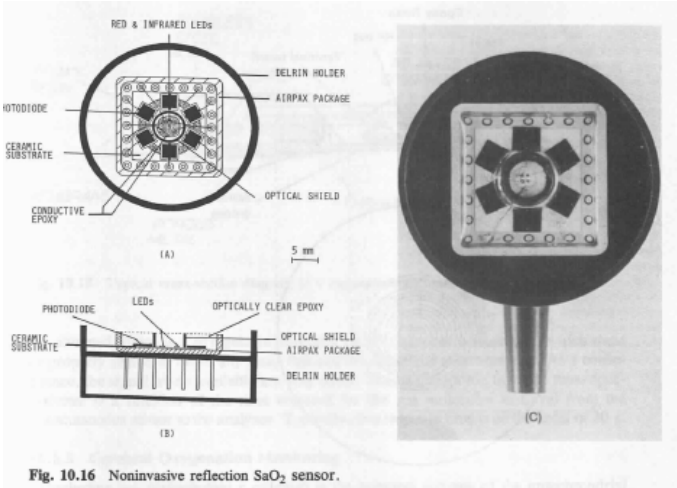

Fig. 10.16 Noninvasive reflection SaO_2 sensor.

RX-0458 [Mendelson] at Fig. 10.16.

Limitation [7C]: Complainants do not dispute that Mendelson discloses "***the sources having a corresponding plurality of operating wavelengths***." Tr. [Goldberg] 1392:12-1393:1. Mendelson at Figure 10.16 discloses red and infrared LEDs, wherein red and infrared light are at different operating wavelengths. Tr. [Sarrafzadeh] 1052:18-22.

Limitation [7D]: Mendelson renders obvious "***the thermal mass disposed within the substrate***" for the same reasons described regarding limitation [7A]. Professor Sarrafzadeh reiterated that Mendelson discloses LEDs and photodiodes mounted on a printed circuit board, and a POSITA would have known to implement the printed circuit board with multiple layers and/or a thermal core disposed within it. Tr. [Sarrafzadeh] 1053:1-7.

Limitation [7E]: Mendelson in combination with Webster renders obvious "***a temperature sensor thermally coupled to the thermal mass***." Webster discloses using a temperature sensor near LEDs. Tr. [Sarrafzadeh] 1053:8-15; RX-0035.0085 [Webster] ("One way to compensate for LED temperature changes is to have ***a temperature sensor built into the probe along with the LEDs*** and photodiode."). The temperature sensor disclosed by Webster would be thermally coupled to the thermal mass disclosed by Mendelson because the temperature sensor would need

[redacted]

to be mounted using thermally conductive electrical connections, as also disclosed by Mendelson, in order to function. Tr. [Sarrafzadeh] 1053:16-22.

Limitation [7F]: Mendelson in combination with Webster renders obvious "***[the temperature sensor] capable of determining a bulk temperature for the thermal mass, the operating wavelengths dependent on the bulk temperature.***" Webster discloses using a temperature sensor built into the probe to compensate for errors in SpO2 readings that can occur due to shifts in LED wavelengths caused by temperature changes. Tr. [Sarrafzadeh] 1053:23-1054:11; RX-0035.0085 [Webster]. In view of Webster, a POSITA would have found it obvious to measure a bulk temperature for the thermal mass, for example by using multiple temperature sensors at multiple locations of the thermal mass. Tr. [Sarrafzadeh] 1053:23-1054:11.

Mr. Goldberg argues that the thermistor in the Accused Apple Watches measures a bulk temperature for the thermal mass because it is used to calibrate LED wavelengths for multiple LEDs, when the thermistor measures a local temperature. Tr. [Goldberg] 621:16-622:3; Tr. [Mehra] 889:25-890:6 (explaining that the thermistor measures the temperature of the thermistor itself in the local area where the thermistor is placed), 890:18-20 (explaining that it's not possible for the thermistor in the Accused Apple Watches to measure the temperature of [redacted] of the printed circuit board as a whole). Under that view, Webster's thermistor would also measure a bulk temperature of the thermal mass. Webster similarly teaches using a temperature sensor built into a probe for use in estimating LED wavelengths and compensating for wavelength changes due to temperature. Tr. [Sarrafzadeh] 1054:14-18, 1053:23-1054:11.

Webster also teaches that operating wavelengths are dependent on temperature, *e.g.*, a bulk temperature for the thermal mass. *Id.* at 1054:20-1055:3. As a property of physics that has been known for many years, the operating wavelengths of LEDs depend on temperature, which results

[redacted]

in the claimed limitation of "the operating wavelengths dependent on the bulk temperature." *Id.* Webster explains in more detail that LED wavelengths depend on an energy gap which in turn depends on temperature. *Id.*, RX-0035.0074, .0083 [Webster].

A POSITA would have been motivated to combine Mendelson and Webster. Tr. [Sarrafzadeh] 1056:6-10. Mendelson and Webster are both related to physiological monitoring systems and are in the same field as the '127 patent. Tr. [Sarrafzadeh] 1056:6-10, RX-0458 [Mendelson] at Fig. 1016 (describing a noninvasive reflection blood oxygen sensor), RX-0035 [Webster] at Title ("Design of Pulse Oximeters"). A POSITA would have been motivated to use the temperature sensor of Webster to improve the functionality of the pulse oximeter of Mendelson by increasing the accuracy of the wavelength estimation. Tr. [Sarrafzadeh] 1056:11-15. A POSITA would have had a reasonable expectation of success because temperature sensors are very simple, low-tech, and have been known for many years prior to the '127 patent. *Id.* at 1056:16-23. A POSITA would also have been able to successfully incorporate a temperature sensor as taught by Webster into the pulse oximeter of Mendelson in a straightforward manner. *Id.*

Limitation [7G]: Complainants do not dispute that Mendelson teaches "***a detector capable of detecting light emitted by the light emitting sources after tissue attenuation***." Tr. [Goldberg] 1392:12-1393:1. Mendelson discloses photodiodes, as shown above in Fig. 10.16, which perform as the claimed detector. Tr. [Sarrafzadeh] 1055:4-8.

Limitation [7H]: Complainants do not dispute that Mendelson teaches "***wherein the detector is capable of outputting a signal usable to determine one or more physiological parameters of a patient based upon the operating wavelengths***." Tr. [Goldberg] 1392:12-1393:1, 1393:10-1394:6 (arguing that figures from Mendelson and Webster apply to 1970's ear oximeters without disputing that Mendelson discloses limitation [7H]). Mendelson explains that oximeters

[redacted]

work by collecting optical signals, processing them, such as with a processor, and displaying a physiological parameter of a patient such as an SpO2 level. Tr. [Sarrafzadeh] 1055:11-18; RX-0458.0021 [Mendelson].

Claim 9: Mendelson in combination with Webster renders obvious "***[t]he physiological sensor according to claim 7 wherein the temperature sensor comprises a thermistor***." Tr. [Sarrafzadeh] 1055:20-1056:1. Thermistors are a type of resistive circuit that have been known for many years. Tr. [Sarrafzadeh] 1055:20-1056:1; RX-0419.0003 [McGraw-Hill Dictionary]. For example, "Light Probe, Measuring System Using the Same, and Reflected Light Detecting Method Using the Same," a patent application from 2004 applied for by Yamada ("Yamada") (RX-0381), describes a pulse oximeter that uses a thermistor. Tr. [Sarrafzadeh] 1055:20-1056:1; RX-0381 [Yamada] at [0111].

b. Yamada in View of Noguchi Render Claim 9 Obvious

Yamada in combination with Noguchi (RX-0353) ("Noguchi"), a patent granted in 1994 entitled "Apparatus and Method for LED Emission Spectrum Control," renders claim 9 obvious. Tr. [Sarrafzadeh] 1057:2-1062:24.

Limitation [7 Preamble]*:** Complainants do not dispute that Yamada discloses "a physiological sensor capable of emitting light into tissue and producing an output signal usable to determine one or more physiological parameters of a patient, the physiological sensor comprising***." Tr. [Goldberg] 1396:12-21. Yamada discloses a pulse oximeter. Tr. [Sarrafzadeh] 1058:2-7; RX-0381 [Yamada] at [0041], Fig.1, Fig. 5.

Limitation [7A]: Yamada discloses "***a thermal mass***." Fig. 5 of Yamada shows LEDs and photodiodes mounted on a printed circuit board. Tr. [Sarrafzadeh] 1058:8-19. Electrical connections throughout the board provide power to the LEDs and photodiodes and also serve to

[redacted]

thermally couple the components. *Id.* A POSITA would have understood to implement the circuit board of Yamada with a thermal core, *i.e.*, a thermal mass. *Id.* For example, a POSITA would use a thermal core to provide thermal management for the circuit board, as taught by "The Multilayer Printed Circuit Board Handbook" (Scarlett) (RX-0397). *Id.; id.* at 1059:17-25. A POSITA would have understood to implement the circuit board of Yamada as a multilayer printed circuit board, which is what Complainants allege is the claimed thermal mass in the Accused Apple Watches. Tr. [Goldberg] 617:9-21.

(FIG. 5)

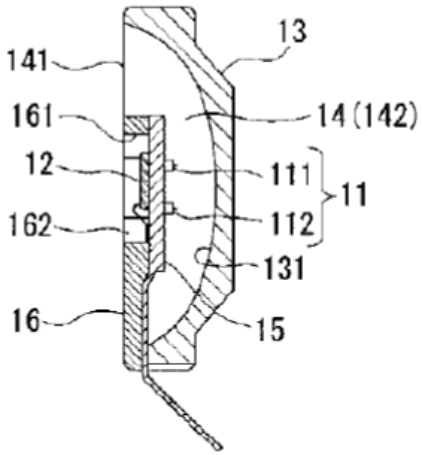

RX-0381 [Yamada] at Fig. 5

Limitation [7B]: Yamada discloses "***a plurality of light emitting sources, including a substrate of the plurality of light emitting sources, thermally coupled to the thermal mass***." Complainants do not dispute that Yamada discloses a plurality of light emitting sources and a substrate of the light emitting sources. Tr. [Goldberg] 1396:12-21. Yamada discloses a first light-emitting component 111 and a second light-emitting component 112 which are LEDs mounted on a substrate as shown above in Fig. 5. Tr. [Sarrafzadeh] 1058:20-25. The LEDs are thermally coupled to the thermal mass because the electrical connections between the LEDs and the rest of

[redacted]

the circuitry and metal within the substrate, *i.e.* the circuit board, thermally couple the LEDs and the metal within the circuit board. *Id.* at 1059:1-6.

Limitation [7C]*:** Complainants do not dispute that Yamada discloses "the sources having a corresponding plurality of operating wavelengths***." Tr. [Goldberg] 1396:12-21. Yamada explains that the first light-emitting component can emit red light and the second light-emitting component can emit infrared light, wherein red and infrared light are at different wavelengths. Tr. [Sarrafzadeh] 1059:10-16; RX-0381 [Yamada] at [0043].

Limitation [7D]: Yamada discloses "***the thermal mass disposed within the substrate***" for the same reasons disclosed regarding limitation [7A]. Tr. [Sarrafzadeh] 1059:18-25.

Limitation [7E]*:** Yamada discloses "a temperature sensor thermally coupled to the thermal mass***." Tr. [Sarrafzadeh] 1069:1-7. Yamada discloses a temperature sensor attached to light probe 1. RX-0381 [Yamada] at [0109], Fig. 5. Professor Sarrafzadeh explained that the attachment requires an electrical attachment between the temperature sensor and light probe, wherein the electrical attachment would provide thermal coupling between the temperature sensor and the thermal mass. Tr. [Sarrafzadeh] 1060:1-7.

Limitation [7F]*:** Yamada in combination with Noguchi discloses "[the temperature sensor] capable of determining a bulk temperature for the thermal mass, the operating wavelengths dependent on the bulk temperature***." Yamada discloses a temperature sensor capable of determining a bulk temperature for the thermal mass. Tr. [Sarrafzadeh] 1060:8-17. Yamada discloses a temperature sensor attached to the light probe on the surface of the LED substrate. *Id.*, RX-0381 [Yamada] at [0109]. In view of Yamada's disclosure, a POSITA would have found it obvious to measure a bulk temperature for the thermal mass, for example by using multiple temperature sensors. Tr. [Sarrafzadeh] 1060:8-17.

[redacted]

As discussed above regarding Mendelson and limitation [7F], Mr. Goldberg argues that the thermistor in the Accused Apple Watches measures a bulk temperature for the thermal mass, wherein the thermistor measures a local temperature at point where it is mounted on the substrate. Professor Sarrafzadeh explained that Yamada similarly teaches using a temperature sensor on the LED substrate. Tr. [Sarrafzadeh] 1060:8-24.

As discussed above regarding Mendelson and limitation [7F], the limitation of "the operating wavelengths dependent on the bulk temperature" is disclosed because LED wavelengths depend on temperature as a property of physics. Noguchi also explains this phenomenon. *Id.* at 1057:21-1058:1; RX-0353 [Noguchi] at 2:59-68 (showing emission wavelength energy is related to temperature). Noguchi teaches using a temperature measurement means or a plurality of temperature measurement means to measure "the temperature of an LED" or "the temperature in the environment in which the LED is disposed." Tr. [Sarrafzadeh] 1060:25-1061:9; RX-0353 [Noguchi] at 1:38-50. A POSITA would have used Noguchi's teachings that LED wavelength is a function of temperature in order to provide better wavelength estimation for the pulse oximeter of Yamada. Tr. [Sarrafzadeh] 1061:10-15.

A POSITA would have found it obvious to combine Yamada with Noguchi because Yamada is related to using a pulse oximeter and performing physiological measurements, while Noguchi explains the impact of temperature on LED wavelengths in a sensor. *Id.* at 1061:17-22, 1057:21-1058:1; RX-0353 [Noguchi] at 1:7-12 (describing the invention being used in "an LED light source for a sensor"). A POSITA would have been motivated to improve the functionality of Yamada's pulse oximeter by using Noguchi's teachings. Tr. [Sarrafzadeh] 1061:23-1062:2; RX-0035.0122 [Webster] ("As the wavelengths of the LED depend on the temperatures, for accurate measurements the effects of the temperatures must be known, for adequation

[redacted]

compensation . . ."), .0085 ("One way to compensate for LED temperature changes is to have a temperature sensor built into the probe along with the LEDs . . .); RX-0353 [Noguchi] at 1:7-12 ("The present invention relates to an apparatus and method for controlling the emission spectrum of an LED . . ."). A POSITA would have had a reasonable expectation of success in combining Noguchi's teachings regarding the use of a temperature sensor with Yamada's pulse oximeter. Tr. [Sarrafzadeh] 1062:2-8.

Limitation [7G]*:** Complainants do not dispute that Yamada teaches "a detector capable of detecting light emitted by the light emitting sources after tissue attenuation***." Tr. [Goldberg] 1396:12-21. Yamada discloses that light that has "traversed body tissue is received by the light-receiving component 12." Tr. [Sarrafzadeh] 1062:9-14; RX-0381 [Yamada] at [0062], Fig. 5.

Limitation [7H]*:** Complainants do not dispute that Yamada teaches "wherein the detector is capable of outputting a signal usable to determine one or more physiological parameters of a patient based upon the operating wavelengths.*"** Tr. [Goldberg] 1396:12-21. Yamada discloses that light-receiving component 12 outputs an electrical signal that is used by the CPU to determine a physiological parameter based on the detected red and infrared wavelengths. Tr. [Sarrafzadeh] 1062:15-20; RX-0381 [Yamada] at [0062] (disclosing that "a strength signal for the light is sent to the analysis component 2 in the form of an electrical signal"), [0065] (describing how the CPU determines a ratio between the red and infrared light to determine a blood oxygen saturation).

Claim 9: Complainants do not dispute that Yamada discloses "***[t]he physiological sensor according to claim 7 wherein the temperature sensor comprises a thermistor***." Tr. [Goldberg] 1396:12-21. Yamada discloses using a thermistor as the temperature sensor on the LED substrate. Tr. [Sarrafzadeh] 1062:21-25; RX-0381 [Yamada] at [0111].

[redacted]

2. No Secondary Considerations of Non-Obviousness

No long-felt but unmet need. Before the '127 patent, various methods of compensating for wavelength shift due to temperature in pulse oximeters were known. Tr. [Goldberg] 1405:1-4. Specifically, calibrations using a temperature sensor on a substrate were known. *Id.* at 1407:25-1408:4. Multilayered circuit boards were known, and multilayered circuit boards with a thermal core, *i.e.* the claimed thermal mass, were known. *Id.* at 1403:13-1404:1; RX-0397.0122 [Scarlett], .0037. LEDs, LED substrates, thermistors, and photodetectors were known. Tr. [Goldberg] 1404:5-13. In sum, the claimed invention of the '127 patent was known. Tr. [Sarrafzadeh] 1063:8-21.

No commercial success. No industry praise. There is no evidence of commercial success or industry praise that has a nexus to the '127 patent. Tr. [Sarrafzadeh] 1063:21-1064:3, 1135:4-24 (explaining that Complainants failed to prove that any industry awards are related to the claimed invention). Mr. Goldberg also was unaware of any licenses to the '127 patent. Tr. [Goldberg] 1407:7-9.

No copying. Complainants have shown no evidence of copying of the '127 patent by Apple, because as explained above, there is no nexus between Complainants' alleged evidence and the claimed invention. Section IV.D.1.d, *supra* (allegedly recruited employees from Complainants did not work on the accused blood oxygen feature; using products for comparison does not show copying; Apple engineers did not copy any other company's technology). Professor Sarrafzadeh opined that Apple did not copy the invention of the '127 patent, and Mr. Goldberg did not offer any opinion to rebut that statement. Tr. [Sarrafzadeh] 1064:4-7; Tr. [Goldberg] 1407:10-24.

No failure of others. ***No unexpected results.*** ***No industry skepticism.*** There is no evidence of failure of others, unexpected results, or industry skepticism indicative of non-obviousness. Tr. [Sarrafzadeh] 1064:4-7.

VII. DOMESTIC INDUSTRY – ECONOMIC PRONG

Complainants' economic prong assertions fail on multiple grounds. As Apple's economic expert, Vincent Thomas, explained during the evidentiary hearing, Complainants are claiming that are—by their own admission—not specific to the alleged domestic industry products. Tr. [Young] 516:12-16. Moreover, every dollar of Complainants' claimed expenditures depends on data and calculations from Complainants' source appendices, documents created specifically for this Investigation by interested Masimo employees and their attorneys. Those appendices suffer from a wide range of methodological flaws (discussed in detail below) which, taken individually or collectively, render them unreliable. The remaining evidence is insufficient to show that ***any*** specific dollar amount should be attributed to the domestic industry products. As a result of these and other flaws, Complainants have failed to carry their burden under the economic prong.

A. Lack of Significant Investment in Plant and Equipment

1. Masimo Watch

a. Complainants' Source Appendices Are Unreliable.

Complainants' entire economic-prong claim for the Masimo Watch rests on spreadsheets created for this litigation by Complainants' finance group and submitted as appendices to Complainants' interrogatory responses (which were never verified). Tr. [Young] 485:20-25, 486:8-15; CX-0623C-0625C, CX-0628C-0629C, CX-0631C-0635C, CX-0637C-0649C [Appendices]. While some of the data contained in the appendices allegedly relate to

Complainants' financial records, they also contain numerous critical estimates and assumptions, for both past and projected expenditures, for which there is neither any explanation nor supporting documentation. Tr. [Thomas] 1285:15-1286:24; Tr. [McGavock] 561:9-562:19; Tr. [Young] 486:1-7; RX-1202C [Kaufman Dep.] 33:3-33:8, 44:22-46:3, 51:1-51:9, 55:15-55:18, 57:4-11, 58:16-60:13, 61:6-61:15, 106:2-106:7. Although Complainants called Messrs. Al-Ali, Muhsin, Scruggs, and Young—all of whom provided input during the creation of the appendices—none detailed ***how*** the expenditures were calculated or ***why*** the claimed investments should be found reliable. The critical denoted in the appendices are unsupported by any contemporaneous records or even any documentation or testimony regarding the process by which the estimates were collected and recorded.

Despite these glaring issues, Complainants' economic expert, Daniel McGavock, did virtually nothing to substantiate or validate either the underlying data or the allocations. Instead, he simply assumed the accuracy of Complainants' financial inputs and calculations. Tr. [McGavock] 564:23-566:17. Mr. McGavock did not speak to any of Complainants' employees before preparing his expert report or review relevant deposition testimony from the employees who provided key inputs. Tr. [McGavock] 557:14-558:2, 576:13-19. Mr. McGavock admitted that he considered ***fewer than twenty*** Masimo documents outside of the appendices. Tr. [McGavock] 558:3-559:5; RDX-13.2. Although Mr. McGavock purports to have "independently verified" the expenditures (Tr. [McGavock] 535:24-536:5)—no doubt after he had drafted the entirety of his . Tr. [Thomas] 1322:3-24.

Complainants' unsubstantiated estimation methodology stands in stark contrast to prior estimates that have been found to be reliable. For instance, the ALJ recently considered and credited certain "good faith" estimated expenditures of employee time by complainant Amphenol in the 1241 Investigation. *Certain Electrical Connectors and Cages, Components Thereof, and Products Containing Same*, Inv. No. 337-TA-1241, ID at 362 (March 11, 2022). But unlike the estimates relied upon by Complainants here, Amphenol's estimates were admittedly supported by specific testimony from individual managers about their estimation methodology. *Id.* That methodology included reliance on contemporaneous documents such as "project documents and presentations," which were part of the evidentiary record. *Id.* at 363; *see also Certain Solid State Storage Drives, Stacked Elecs. Components & Prods. Containing Same,* Inv. No. 337-TA-1097, Comm'n Op. at 20-21 (Jun. 29, 2018) (relying on estimates provided by managers corroborated by sworn testimony that he utilized "emails, calendar entries, customer proposals, and invoices" in preparing estimates). Here, there is no such testimony concerning specific estimation methodology or sources.

Complainants' failure to proffer corroborating documents is especially dubious here because it is unfathomable that would not be well documented. *See, e.g.*, *Woodland Trust v. Flowertree Nursery, Inc.*, 148 F.3d 1368, 1373 (Fed. Cir. 1998) (a "paper trail of virtually all commercial activity" is now "ubiquitous," such that it is "rare indeed that some physical record … does not exist").

These made-for-litigation appendices and the calculations they contain are replete with flaws and overstatements that render them unreliable. The table below identifies the major shortcomings in the appendices as well as the effect that those issues have on the claimed

investments. The table also includes a cross reference to the following sections where these issues are discussed in more detail.

Flaws in Complainants' Economic Prong Calculations	Effect on Economic Prong Analysis
Tr. [Young] 516:1-16; Tr. [Thomas] 1289:20-1292:16.	Complainants claimed should not be counted. Sections VII.A.1.c.(1), VII.B.1.d.(1), *infra*.
Tr. [Thomas] 1293:13-1295:10; Tr. [McGavock] 538:4-15.	Complainants claimed expenditures for should not be counted. Sections VII.A.1.c.(2), VII.B.1.d.(2), *infra*.
No basis or documentary support for . Tr. [Thomas] 1291:1-9 1295:11-1296:18 (executive time estimates), 1298:4-1299:5 Tr. [McGavock] 560:6-561:12.	Claimed Sections VII.A.1.c.(1), VII.B.1.d.(1), (3), (6), *infra*.
Cost models used to project future expenditures for lack any supporting basis or documentation. Tr. [Thomas] 1294:21-1295:10.	Expenditures for the identified categories should not be counted. Sections VII.A.1.c.(3), VII.B.1.d.(2), (4), (5), (8), *infra*.
Appendices (and the estimates they contain) were prepared for this Investigation by Masimo and Cercacor executives Tr. [Young] 486:8-15, 493:14-494:17; RX-1211C [Young] 97:4-97:17.	Underscores the need for independent validation and contemporaneous documentation to support the calculations.

Accordingly, because the accuracy and reliability of Complainants' appendices are unsubstantiated and Mr. McGavock admittedly did almost nothing to independently validate those calculations, the ALJ should find that Complainants have failed to establish a significant investment in plant and equipment under subsection (A). Satisfaction of the economic prong should not be based solely on litigation-created documents without even a modicum of supporting contemporaneous documentation, testimony, or independent expert validation.

b. Complainants Improperly Rely on Post-Complaint Evidence.

As set forth above in Section III, Complainants neither alleged in their pre-hearing brief nor presented evidence at the hearing of the requisite "significant and unusual developments" to justify consideration of post-complaint activities and investments. *Thermoplastic Motors*, Inv. No. 337-TA-1073, Comm'n Op. at 7. Accordingly, all activities and developments after July 7, 2021 should be disregarded (under both subsections (A) and (B)). Apple nonetheless identifies additional substantive reasons to disregard those expenditures below.

c. Complainants' Claimed Expenditures Are Overstated.

As discussed above in Section VII.A.1.a, the source appendices are rife with unsupported calculations that markedly overstate Complainants' investments in plant and equipment. Flaws with each of Complainants' calculations (reflected in the upper half of Mr. Thomas's Schedule 3 (RX-1462C)) are discussed below.

(1)

Complainants claim amounts for expenditures RX-1462C; Tr. [Young] 497:1-20, 517:2-8, CDX-0006C.021; Tr. [McGavock] 560:6-10; CDX-15C.006. But these alleged expenditures are unreliable and should not be counted. Tr. [Thomas] 1289:20-1292:16, 1301:6-1302:2.

Although Complainants attribute of these costs to the "Masimo Watch" articles, Complainants present no evidence indicating that any of these undocumented and unexplained Tr. [McGavock] 560:11-15. Instead, Complainants' CFO, Mr. Young, confirmed that the claimed

Tr. [Young] 515:16-25. Mr. Young likewise confirmed that the claimed Tr. [Young] 515:12-516:16; *see also* Tr. [Thomas] 1289:20-1292:16.

Additionally, although Complainants characterized their (Tr. [Opening] 19:12-20), none of Complainants' witnesses offered any explanation of the relationship between had any bearing on the development of the Masimo Watch. To the contrary, Complainants' chief engineer, Mr. Al-Ali, could not even identify which products or projects were encompassed by Complainants' (RX-1196C [Al-Ali Dep.] 162:9-163:1; Tr. [McGavock] 561:2-12) and confirmed that Masimo (Tr. [Al-Ali] 337:17-21). Nor is there any evidence outside of a line item in an appendix to support the amounts that Complainants are claiming for or that identifies the activities that Complainants claim comprise "." *See* Tr. [Young] 517:2-23; CX-0640C [Appendix M], Summary tab, row 11 (using hard-coded allocation percentages).

Accordingly, because the amounts identified as attributable to and because Complainants failed to allocate any portion of those expenditures to , none of Complainants' should be counted under subsection (A). *See, e.g.*, *Certain Digital Media Devices*, Inv. No. 337-TA-882, ID at 450 (July 7, 2014) (rejecting claimed investments attributed to "product lines that include, but are not limited to the DI Products.").

(2) Manufacturing

Complainants claim a portion of the . *See* RX-1462C; CDX-15C.006; Tr. (McGavock) 539:16-24. The pre- and post-complaint amounts are unreliable and should not be counted. *See* Tr. [Thomas] 1292:17-1294:20, 1301:6-1302:2.

With respect to the manufacturing expenditures from Q1 2021, Complainants have failed to identify any evidence that they conducted Instead, Complainants appear to have derived Tr. [Young] 489:10-16. But outside of a single tab of an appendix using hard-coded values (CX-0629C [Appendix A],), there is no documentary support . Complainants did not explain how the utilized square footages identified in the appendix were determined or whether the space was actually used for RX-1202C [Kaufman Dep.] 71:12-19. The source appendix indicates that CX-0629C [Appendix A], Nor is there any documentation supporting

For claimed Complainants rely on Although Complainants did offer testimony about Masimo's , there is again no documentary evidence that More fundamentally, Complainants' *See* CX-0629C [Appendix A], Summary tab, rows 4-5 As Mr. Thomas explained (Tr. [Thomas] 1293:13-1294:20) and Mr. McGavock conceded (Tr. [McGavock] 562:20-563:25), Yet Complainants and Mr. McGavock inexplicably failed to adjust or even validate their . *Id.*

(3) Clinical Lab, Quality, and R&D

Complainants claim amounts for pre- and post-complaint expenditures relating to "Clinical Lab," "Quality," and "R&D." RX-1462C. Once again, these amounts are unreliable and should not be counted.

Turning first to the claimed expenditures , neither Complainants nor Mr. McGavock ever explained what specific activities were occurring during this time period, how the . Nor did Complainants identify any documentary evidence that

substantiates or otherwise explains the identified expenditures, This failure is significant, because the methodology by which Complainants arrived at the specific claimed dollar amount involves an allocation . Tr. [Young] 490:2-13. Although Complainants acknowledged that Masimo (Tr. [Young] 586:22-25), that does not excuse Complainants from justifying and validating Outside of litigation-driven appendices, Complainants have no documentation of ***any kind***—not even of the process by which the retrospective estimates were collected and recorded.

Complainants' claimed expenditures for are also flawed for the same reasons. Moreover, as with other categories of Complainants' . *See* Tr. [Thomas] 1294:21-1295:3. For the amounts attributed to the for instance,

d. Complainants Have Failed to Demonstrate "Significance" in an Appropriate Context.

Complainants fail to show how either their claimed pre-complaint investments in plant and equipment or their projected investments are qualitatively or quantitatively significant in an appropriate context. *Certain Carburetors and Products Containing Such Carburetors*, Inv. No. 337-TA-1123, Comm'n Op. at 23 (Oct. 28, 2019). As set forth above, due to the methodological flaws in their analysis, Complainants have failed to demonstrate that they have invested any

[redacted]

specific amount for plant and equipment attributable to the Masimo Watch. That failure eliminates the need for any significance analysis.

Nonetheless, even under an assumption that Complainants' claimed investments are cognizable under subsection (A), those amounts are neither qualitatively nor quantitatively significant. In his testimony, Mr. McGavock identified different factors that he suggested demonstrate the qualitative and quantitative significance of Complainants' alleged investments. But, as Mr. Thomas explained, none of those factors demonstrate that Complainants' expenditures are significant. Tr. [Thomas] 1302:3-1306:18.

With respect to qualitative significance, Mr. McGavock suggested that Complainants' claimed investments could be considered significant based on an [redacted]" Tr. [McGavock] 543:16-544:1. But Complainants have adduced no evidence demonstrating that any portion of the claimed investments (much less any specific amount) [redacted]. And testimony from Mr. Scruggs concerning the performance of the domestic industry articles indicates that [redacted]. Tr. [Thomas] 1302:16-1303:2; RDX-11.2, Tr. [Scruggs] 448:2-452:14; *see also* Tr. [Sarrafzadeh] 1124:12-23; Tr. [Warren] 1256:5-25 [redacted] 1254:11-1256:1, 1258:9-17.

Mr. McGavock also asserted the investments are significant because they represent Masimo's [redacted]." Tr. [McGavock] 544:2-3. But Mr. McGavock failed to put that assertion in perspective, as he neither pointed to any comparative analysis or documentary evidence to support that claim, nor explained why such a comparison would be informative, [redacted] (Tr. [Kiani]

[redacted]

140:8-11). Moreover, the inability of Masimo's CFO to confirm [redacted] Tr. [Young] 514:10-19 [redacted] *see also* Tr. [Thomas] 1303:3-10.

With respect to Mr. McGavock's reliance on Complainants' allegedly "[redacted] absent substantiating testimony, there is no indication that Complainants' facility is meaningfully distinct. Tr. [Thomas] 1303:11-16.

With respect to quantitative significance, Mr. McGavock's analysis relied on the claimed [redacted] But that figure simply represents an ***allocation method*** used by Complainants (and relied on by Mr. McGavock) for particular costs (Tr. [Young] 489:10-16); it is circular to use the allocation ratio to demonstrate the significance of the calculated amount. Tr. [Thomas] 1305:22-1306:13. Moreover, that ratio applies to just the one element, and does not relate to the ***totality*** of Complainants' claimed investments under subsection (A). Complainants' own spreadsheets show that the combined domestic plant and equipment investments claimed for the Masimo Watch articles [redacted] *See* CX-0635C [Appendix B], R&D Summary, [redacted]

Finally, Mr. McGavock's reliance on the Sound United acquisition as an indicator of qualitative and quantitative significance is highly misleading. ***First***, the acquisition was first

[redacted]

announced on February 15, 2022 (CX-1637), long after the Complaint was filed. As such, the acquisition has no bearing on evaluation of Complainants' asserted domestic industry as of the time of the Complaint. ***Second***, Mr. McGavock's description of it as [redacted] (Tr. [McGavock] 544:9-14) implausibly attributes the full acquisition cost as an investment in distribution for the Masimo Watch. Mr. Young acknowledged that Masimo obtained multiple "premium audio brands like Denon, Marantz, Bowers & Wilkins, as well as Polk Audio" as part of the deal. Tr. [Young] 483:1-9. Masimo's own financial summary shows those brands generate some $900 million in annual revenue and a $125 million earnings stream. CX-1637 at 19; Tr. [Thomas] 1303:17-1304:21. Mr. McGavock provided no analysis of the amount of the acquisition cost that could be plausibly attributed to commercialization of the Masimo Watch. Accordingly, Complainants' acquisition of Sound United is not an appropriate indicator of either quantitative or qualitative significance for the Masimo Watch.

e. Complainants Improperly Aggregated Domestic Industry Expenditures.

Under the technical prong, Complainants have identified five articles as practicing the '501, '502, '648, and '745 patents, one article practicing only the '501, '648, and '745 patents, and two more articles as practicing only the '745 patent. *See* RDX-9.5C; Tr. [Madisetti] 676:4-12, CDX-0011C.0008. Complainants' economic prong analysis (under both subsections (A) and (B)) addresses a singular "Masimo Watch Product," improperly considering all eight articles in the aggregate. Tr. [McGavock] 538:20-539:1 ("I organized my analyses around the Masimo Watch, which I understand is covered by four patents …"); Tr. [Thomas] 1306:20-1307:18; *Certain Electronic Stud Finders*, Inv. No. 337-TA-1221, Comm'n Op. at 48 (Mar. 14, 2022) (expenditures may not be aggregated across products practicing different asserted patents). Nor do Complainants

[redacted]

provide the information necessary to allocate expenditures to the different articles. Tr. [Thomas] 1306:20-1307:18. In the absence of a reliable basis for attributing the aggregated expenditures to the distinct set of claimed DI products, no quantification is possible. *Electronic Stud Finders, supra.*

[redacted]

f. Complainants' Claim of a Domestic Industry "in the Process of Being Established" Is Not Supported by the Evidentiary Record.

Complainants allege, in the alternative, a domestic industry "in the process of being established" (Complaint ¶ 86) but fail to adduce sufficient and reliable evidence demonstrating that (i) they have taken the necessary "tangible steps" to establish a domestic industry and (ii) there is a likelihood that a qualifying domestic industry will be "likely to exist 'within a *reasonable* period of time.'" *Certain Road Construction Machines*, Inv. No. 337-TA-1088, Order No. 30 at 5 (July 26, 2018) (emphasis in original).

Complainants have provided little pre-complaint documentation to evidence steps taken to establish an industry or readiness to commence full-scale production. As explained throughout this section, the evidentiary basis for all of Complainants' claimed expenditures is unreliable and unsubstantiated. Moreover, Complainants have pointed to no documentation of a [redacted] The one "[redacted]" document cited by Complainants at the hearing, CX-0783C [redacted], is an [redacted]. At the time of the Complaint, Complainants [redacted] *Compare* CX-0783C at 7 [redacted] *with* Tr. [Muhsin] 371:21-24 [redacted]

Nor have Complainants provided the types of documents typically generated by a company for a major investment initiative, such as business plans or board presentations, or documentation

[redacted]

showing actual or committed expenditures, such as equipment orders, internal capex approvals, or labor plans. Tr. [Thomas] 1309:5-8; RX-1211C [Young Dep.] 201:5-15. Instead, Complainants and Mr. McGavock rely exclusively on the appendices as support for Complainants' claimed domestic industry investments, which, as discussed above, contain speculative, estimated figures unsupported by any contemporaneous business records.

For the reasons set forth above in Section III, evidence concerning post-complaint developments should be disregarded. To the extent it is considered, it weighs heavily against finding a domestic industry in the process of being established. Throughout this Investigation, Complainants provided a moving target as to the "product" to be considered for the technical prong analysis, including, at best, [redacted]. Tr. [Muhsin] 124:25-125:5. At the hearing, Complainants presented witness testimony concerning the purported state of the Masimo Watch development. But at best, Complainants' witnesses explained that following the filing of the Complaint, Masimo [redacted] Although Complainants claim to now be months into a "limited market release,"[33] Masimo's CFO, Micah Young, admitted on cross-examination that [redacted]. Tr. [Young] 514:10-19. Nor did Masimo [redacted]. Mr. Kiani acknowledged that Complainants [redacted] Tr.

[33] Complainants' alleged limited market release requires a customer to submit to certain conditions, including signing a nondisclosure agreement and committing to providing feedback, in order to participate. Tr. [Muhsin] 372:3-10; Tr. [Kiani] 178:15-21.

[redacted]

[Kiani] 123:21-124:24, 179:17-22 [redacted]). Complainants' COO, Bilal Muhsin, similarly [redacted] Tr. [Muhsin] 372:11-17. And although Mr. McGavock offered the conclusory opinion that future projected expenditures should be considered due to "the tangible steps Masimo is taking to expand its business" (Tr. [McGavock] 542:14-20), the only "step" he specifically identified was Masimo's purchase of Sound United (Tr. [McGavock] 544:9-14). But as explained above, although the purchase price of Sound United was large, that investment is attributable to Sound United's ongoing business and millions of dollars of annual earnings, and Mr. McGavock provided no analysis quantifying what amount, if any, can be considered related to the Masimo Watch articles. *See* Section VII.A.1.d, *supra*. Accordingly, even with consideration of post-complaint evidence, Complainants have failed to demonstrate that they will establish a significant, qualifying domestic industry related to the Masimo Watch articles within a reasonable period of time.

2. Rainbow Sensors

As Mr. Thomas explained during the evidentiary hearing, Complainants' economic prong evidence for the rainbow sensor(s) "suffer from many of the same issues as the DI watch products." Tr. [Thomas] 1309:16-1310:3. Complainants' claimed expenditures again rely almost exclusively on their made-for-litigation appendices; Complainants do not offer sufficient corroborating documents or testimony supporting either the data contained in the appendices, the methods employed in preparing them, or the reliability of the information, including the calculations and allocations used. And Mr. McGavock—who again simply accepts Complainants' information and calculations without any independent verification—offers only a sparse significance analysis that fails to place the claimed investments in the appropriate context. Complainants and Mr.

[redacted]

McGavock seem to believe that simply because their litigation-driven appendices contain large numbers, they automatically satisfy the economic prong. Not so.

a. Claimed Expenditures Are Not Tied to Article(s) Identified Under the Technical Prong.

Complainants alleged in their Complaint that "at least" twenty rainbow products practice at least one claim of the '127 patent. DocID 746189 [Complaint] ¶ 87.[34] But, as discussed above in Section VI.D, during the evidentiary hearing Complainants never once identified the specific rainbow sensor(s) that constitute the domestic industry article(s) covered by the '127 patent under the domestic industry technical prong. This failure is fatal to Complainants' economic prong allegations as well. The statute requires a showing of a domestic industry "relating to the articles protected by the patent." 19 U.S.C. §1337(a)(2). "A company seeking section 337 protection must therefore provide evidence that its substantial domestic investment—*e.g.*, in research and development—relates to ***an actual article that practices the patent*** …." *Microsoft Corp. v. ITC*, 731 F.3d 1354, 1361-62 (Fed. Cir. 2013) (emphasis added). Absent identification of the specific products alleged to practice the '127 patent under the technical prong, Complainants cannot meet their burden of showing the requisite investments relate to products "protected by the patent." Moreover, to the extent that Complainants are found to have satisfied the technical prong for the '127 patent for some, but not all the rainbow products relied on by Mr. McGavock and by Complainants in creating the source appendices, the analysis fails. Complainants' rainbow-related expenditures have been calculated and considered in the aggregate, without any analysis or

[34] The Complaint is the only reference in the record that even purports to identify the universe of rainbow sensor(s) that are supposedly covered by the '127 patent; no document or testimony was offered during the evidentiary hearing that indicates which rainbow sensor(s) Complainants contend are the domestic industry articles. Complainants cannot rely on the Complaint allegations as substantive evidence. *Certain LED Lighting Devices*, Inv. No. 337-TA-1081, Order No. 55 at 19 (Aug. 1, 2018).

allocation to the individual domestic industry article(s). Tr. [McGavock] 538:19-539:1 ("I organized my analysis around … the rainbow sensor products, which are related to the '127 patent."). An economic prong analysis that aggregates expenditures across practicing and non-practicing products is insufficient. *Electronic Stud Finders,* Inv. No. 337-TA-1221, Comm'n Op. at 48.

b. Complainants' Claimed Expenditures Are Based On Unreliable Evidence and Allocations.

Complainants rely on unreliable evidence and allocations, which make it impossible to determine whether any specific amount was invested in plant and equipment for the rainbow DI article(s). As with the "Masimo Watch" articles, Complainants' domestic industry claims for the rainbow article(s) rest almost entirely on their source appendices. Tr. [Young] 488:2-17, 497:21-500:7 (offering conclusory testimony that Complainants generally spent money on rainbow product(s) and providing uncorroborated amounts purportedly invested); Tr. [McGavock] 546:12-18 ("I used the same methodology applied or described by Mr. Young"), 548:13-20. The ***only*** investments about which Complainants offered any "substantive" testimony concerns R&D expenditures, for which Mr. Young testified that they employed the ***same*** approach of using uncorroborated, annual, department-wide time estimates to allocate overall R&D expenses as reported on Masimo's 10-K. Tr. [Young] 500:8-22; Tr. [Thomas] 1309:16-1310:3). Because Complainants fail to demonstrate that the methodologies used to create the rainbow-related appendices were reasonable or accurately depict their domestic industry

activities and associated costs with respect to the rainbow article(s), the calculations provided within the appendices should be disregarded.

c. Complainants' Claimed Expenditures Are Overstated.

(1) R&D Facilities – 52 Discovery and 50 Parker

Complainants claim expenditures for facilities at 52 Discovery and 50 Parker associated with Masimo's R&D activities. Tr. [Young] 546:5-11. As with the Masimo Watch, Complainants fail to explain on what these R&D employees were actually working, how those activities relate to the rainbow domestic industry article(s), or whether Complainants' allocation methodologies are reasonable. For example, like the Masimo Watch, Complainants did not offer any floor plans or other documents that would corroborate Complainants' allocation based on square footage estimates. Nor have Complainants provided any documentation to support their time-based estimates for the claimed Rainbow R&D activities. As discussed above, the only testimony provided was that the approach used for rainbow R&D was the ***same*** unreliable approach used to calculate . Tr. [Young] 500:8-22; Tr. (Thomas) 1309:16-1310:3. Those estimates, . *See, e.g.*, CX-0644C [Appendix K], Rainbow Chart tab. And, unlike for the Masimo Watch, Complainants have not even attempted to offer any testimony regarding who compiled these estimates, much less how the time allocations were determined.

(2) Manufacturing

The only testimony regarding manufacturing offered during the evidentiary hearing was a threadbare explanation that Complainants pulled production volumes for rainbow "adhesives and

reusables" and then applied "U.S. standard costs" as their estimated total manufacturing expenditures. Tr. [Young] 498:2-10. Complainants offered no testimony regarding how the "adhesives and reusables" products relate to the rainbow domestic industry article(s) or why this allocation methodology is appropriate. And Complainants fail to offer any evidence showing the expenses included in the "standard costs" or what portion relates to domestic plant and equipment expenditures.

(3)

Complainants referenced claimed (CDX-0015C.014 [McGavock]), but provided no testimony explaining Complainants use (CX-0641C [Appendix I], but fail to explain why that methodology is reasonable or why they did not simply use the actual financial records for each of those other years.

d. Complainants Have Failed to Demonstrate "Significance" in an Appropriate Context.

Complainants have not shown that the claimed expenditures are quantitatively or qualitatively significant in an appropriate context. ***First***, Mr. McGavock did not offer ***any*** analysis to support his significance opinions. McGavock offered ***no*** opinion on qualitative significance for the rainbow article(s). And the sum total of Mr. McGavock's quantitative significance opinion was stating his understanding of Complainants' rainbow-related investments—without any independent validation—and simply concluding that those expenditures were significant. Tr. [McGavock] 549:3-550:2. ***Second***, Mr. McGavock made no attempt to contextualize Complainants' claimed expenditures. For example, Complainants ignore

[redacted] *Compare* CX-0649C [Appendix T], column O [redacted] *with* CX-1630.94 [2/23/2021 Masimo Form 10-K] [redacted] Furthermore, Mr. McGavock fails to address that the rainbow products [redacted]. RX-1211C [Young Dep.] 54:12-54:18 (Q. [redacted] Yet Complainants and Mr. McGavock provide no description of [redacted]

B. Lack of Significant Employment of Labor or Capital

1. Masimo Watch

a. Complainants' Source Appendices Are Unreliable.

As explained above in Section VII.A.1.a, Complainants' claimed investments related to the Masimo Watch articles should be disregarded due to severe methodological flaws. This problem applies equally, if not with greater force, to Complainants' claimed investments under subsection (B). The table above in Section VII.A.1.a identifies the most significant flaws in Complainants' assertions, the effect of those flaws on the claimed investments, and identifies where those flaws are discussed in greater detail.

Mr. McGavock tacitly admitted that these flaws dramatically alter the total amounts claimed for Complainants' domestic industry. In his direct testimony, Mr. McGavock presented an alternative analysis, which excludes the entirety of Complainants' [redacted] CDX-0015C.10; Tr. [McGavock] 542:4-13; *see also*

Tr. [Thomas] 1289:2-9. But as explained below, even those expenditures should not be counted due to the significant flaws in how they were determined. Tr. [Thomas] 1289:10-19.

b. Complainants Improperly Rely on Post-Complaint Evidence.

As discussed above, Complainants have neither alleged nor shown the circumstances necessary to justify consideration of post-complaint developments. All activities and developments after July 7, 2021 should be disregarded.

c. Complainants Improperly Rely on Non-Qualifying Expenditures.

Complainants improperly include in their calculations expenditures that are not cognizable as "employment of labor or capital."

First, Complainants claim over CDX-0006C.020; Tr. [Young] 496:20-25; CX-0628C [Appendix G]. Tr. [Thomas] 1300:17-25; *see also, e.g.*, Tr. [Kiani] 123:7-16. But more fundamentally, , and thus are not properly cognizable as domestic industry investments. *See Certain Stringed Musical Instruments*, Inv. No. 337-TA-586, Comm'n Op. at 16 (May 16, 2008). Complainants' expert, Mr. McGavock, appears to concede the impropriety of these expenses, as he did not reference or otherwise include them in his hearing testimony.

Second, Complainants claim expenditures associated with which Mr. Young described as representing "," but failed to explain the underlying activities, how they are related to the Masimo Watch articles, or whether they are qualifying domestic industry investments. Tr. [Young] 492:11-15. The record is devoid of any definitive evidence about . Moreover, Mr. McGavock did not even address whether as required by *Lelo Inc, v. ITC*, 786 F.3d 879, 885 (Fed. Cir. 2015). And although Mr. Scruggs testified that he was knowledgeable about his testimony did not provide any information that would address the concerns set forth above. Tr. [Scruggs] 435:11-20.

d. Complainants' Claimed Expenditures Are Overstated.

As discussed above in Section VII.A.1.a, the source appendices are rife with unsupported calculations, markedly overstating Complainants' investments in labor and capital. Flaws with each of Complainants calculations (reflected in the lower half of Mr. Thomas's Schedule 3 (RX-1462C)) are discussed below.

(1)

Complainants claim more than CDX-0006C.021, Tr. [Young] 497:1-20. As discussed above in Section VII.A.1.c.(1), Complainants , but presented no evidence linking any of these undocumented and unexplained R&D activities to any aspect of the "Watch" articles. Mr. Young's testimony suggests that the claimed R&D expenses were related

Tr. [Young] 515:12-516:16; Tr. [Thomas] 1289:20-1291:17. And again, Complainants' witnesses could not explain how the undocumented, time-based allocation methodology was implemented. RX-1196C [Al-Ali Dep.] 162:9-163:1; Tr. [McGavock] 561:2-12; Tr. [Young] 517:2-23; Tr. [Thomas] 1289:20-1291:17.

(2)

Complainants improperly claim amounts for pre- and post-complaint As Mr. Thomas explained, the manufacturing estimates provided by Complainants are fundamentally flawed for several reasons. Tr. [Thomas] 1292:17-1294:20. ***First***, the . *See, e.g.,* CX-0629C [Appendix A], ; Tr. [McGavock] 518:17-23 (acknowledging no documentary sources for cost estimates).

Second, and compounding the reliability issues, Complainants arrive at their specific claimed dollar amount by combining the unsupported expenditure information with But those *See* CX-0629C [Appendix A], ; Tr. [Young] 517:24-519:9. Mr. McGavock acknowledged the unreliability of these estimates by revising (Tr. [McGavock] 562:20-563:7). Yet despite

[redacted]. Tr. [Thomas] 1292:17-1294:20; Tr. [McGavock] 538:4-10. As Mr. Thomas explained, [redacted] calls into question the entirety of Complainants' post-complaint expenditures for manufacturing. Tr. [Thomas] 1292:17-1294:20.

(3) Executive Labor

Complainants improperly claim expenditures for pre- and post-complaint compensation for their entire executive team. Complainants' "Executive Labor" expenditures are based on an estimated [redacted], with no underlying support showing actual labor expenditures or documentation of the time estimates. CX-0624C [Appendix C]; Tr. [Thomas] 1295:11-1298:3. Other than cursory testimony by Mr. Young, no Masimo employee explained how these expenses or time-based estimates were determined or what types of activities are accounted for in the estimates. Tr. [Young] 493:14-494:6. In fact, the deposition testimony of Masimo's personnel indicates that there was no consistent methodology used to determine the executive time estimates. *Id.*; RX-1206C [Muhsin Dep.] 129:23-130:2 [redacted] RX-1202C [Kaufman Dep.] 158:7-160:14 [redacted] Finally, given the lack of detail regarding the [redacted] Complainants have not explained how they avoided including non-cognizable expenditures, such as administrative overhead, in their calculations. *See Certain Bone Cements*, Inv. No. 337-TA-1153, Comm'n Op. at 22 (Jan. 25, 2021). There is no evidence in the record to justify including [redacted]

[redacted] Tr. [Thomas] 1297:11-1298:3.

(4) Customer Support Labor

Complainants claim expenditures for as many as [redacted] CX-0632C [Appendix F], [redacted] *id.*, Summary tab, row 11 [redacted] Tr. [Thomas] 1294:21-1295:10. But that figure was derived from a model for which there is no identified source or accompanying explanation. *Id.* Complainants offer no evidence detailing how their projected costs were determined, [redacted]. Moreover, Complainants' projected expenditures are also untethered to reality since they fail to account for [redacted] Tr. [Thomas] 1294:21-1295:10.

(5) [redacted]

Complainants claim amounts for [redacted] fees but, like the categories of expenditures discussed above, Complainants are simply [redacted] based on undocumented estimates without any corroborating data supporting the reasonableness of the estimates at the time, nor updated to reflect [redacted] Tr. [Thomas] 1294:21-1295:10. Complainants also have not offered any evidence showing that the [redacted] or that the costs are cognizable under *Lelo* without evidence of an "increase of investment or employment in the United States."

(6)

Like the claimed plant and equipment expenses (Section VII.A.1.c.(3), *supra*), Complainants claim amounts for R&D expenditures allocated to the Masimo Watch while failing to offer any evidence or explanation on what these R&D employees were actually working, how those activities relate to the Masimo Watch Devices, or whether Complainants' allocation methodologies are reasonable. Tr. [Thomas] 1298:4-1299:17. Complainants admittedly brought no one to the hearing to explain how the underlying time estimates were generated. Tr. [McGavock] 564:23-566:17; Tr. [Young] 519:21-520:7. Additionally, Complainants cite no documentary evidence indicating the R&D projects involved, nor how that work differed from the claimed R&D , which were simultaneously quantified over the same time period. Complainants likewise fail to explain how or why amounts for future R&D expenditures . *Compare* CDX-0006C.032, Tr. [Young] 502:7-18 ( ) *with* Tr. [Kiani] 179:25-180:7 , Tr. [Muhsin] 372:18-24

(7)

Complainants claim expenditures for . Tr. [Young] 495:11-18. One component consists of . Tr. [Young] 496:3-6. There is no evidence that such work was conducted in the United States, nor did

Complainants attempt to allocate US vs. non-US expenditures. Another component consists of claimed post-complaint CX-0620C ( ); Tr. [Young] 495:11-18. Complainants offered no evidence that Complainants also include " ," (Tr. [Young] 494:23-495:2) but fail to provide any supporting documentation. Complainants' witnesses testified at the hearing that Masimo *See, e.g.*, Tr. [Muhsin] 385:11-14; Tr. [Scruggs] 468:24-469:2.

(8) HR Recruiting Labor

Complainants claim projected expenditures for recruiting engineers for work on the "Masimo Watch," based on conclusory testimony at the hearing, unsupported by any documentation or other evidence for Tr. [Thomas] 1299:18-1300:3; Tr. [Young] 495:3-7. Instead, Complainants merely relied on an (RX-1202C [Kaufman Dep.] 187:4-15), with no documentation that *Id.* 188:13-17.

e. Complainants Have Failed to Demonstrate "Significance" in an Appropriate Context.

As discussed above in Section VII.A.1.d, Mr. McGavock's significance opinion simply assumes Complainants' claimed expenditures are valid—without any independent verification—and fails to demonstrate significance in an appropriate context. Even if the ALJ were to determine that all of Complainants' claimed investments are cognizable under subsection (B), those amounts are neither qualitatively nor quantitatively significant

Mr. McGavock opined that Complainants are Tr. [McGavock] 545:5-6. But even if the ALJ were to credit every dollar that Complainants are claiming for the Masimo Watch, Tr. [Thomas] 1305:2-9. Given the myriad issues with Complainants' calculations of the claimed investments, discussed above, the actual figure is certainly far lower.

Mr. McGavock also relied on Complainants' claim that Tr. [McGavock] 545:8-9. But that represents only the undocumented , which, as Mr. Thomas explained, does not provide an appropriate basis for assessing the significance of a complainant's domestic industry. Tr. [Thomas] 1305:10-19. In the same calculations Complainants projected a CX-0629C [Appendix A], RX-1211C [Young Dep.] 84:14-17; *see also* Tr. [McGavock] 570:7-10. Masimo's own calculations indicate . *See, e.g.*, CX-0629C [Appendix A], ; CX-1630.35 [2/23/2021 Masimo Form 10-K] (Masimo has 333,400 square feet of manufacturing facilities in Mexico, 70,700 square feet in Irvine).

[redacted] Tr. [Thomas] 1293:13-20. Complainants' claimed domestic manufacturing expenditures do not represent a meaningful amount of investment in the United States.

Additionally, Mr. McGavock pointed to Masimo's [redacted] *See* CDX-0015C.012. But as discussed above in Section VII.B.1.d.(6), these figures are based on time allocations that are unsupported and unreliable. Further, as Mr. Thomas explained, they do not provide a reliable measure of significance. Tr. [Thomas] 1306:7-13 ("[U]sing allocation percentages to arrive at a number and then circularly using those percentages to represent significance, I think, is misleading and inappropriate.").

Finally, the fact that Complainants [redacted] does not indicate significance. [redacted] are common components in consumer electronics, and simply [redacted] to develop such a component is not a measure of quantitative significance. Tr. [Thomas] 1306:14-18. Moreover, [redacted].

f. Complainants Improperly Aggregated Domestic Industry Expenditures.

As discussed above in Section VII.A.1.e, Complainants have improperly aggregated claimed expenditures for all eight asserted DI articles, despite their technical prong contentions that the articles practice different sets of patents. Without information in the evidentiary record to allow quantification of expenditures properly attributable to each set of domestic industry articles, Complainants cannot satisfy the economic prong for any of the articles. *Electronic Stud Finders, supra.*

[redacted]

g. Complainants' Claim of a Domestic Industry "in the Process of Being Established" Is Not Supported by the Evidentiary Record.

For the same reasons discussed above in Section VII.A.1.f, Complainants have failed to demonstrate that a domestic industry was in the process of being established as of the date of the Complaint. To the extent it is appropriate to consider post-complaint developments, these developments demonstrate that Complainants are nowhere near a wide commercial launch of the Masimo Watch. *See id.*

2. Rainbow Sensors

a. Complainants' Claimed Expenditures Are Based On Unreliable Evidence And Allocations.

As with subsection (A) (Section VII.A.2.b, *supra*), Complainants' domestic industry claims under subsection (B) also rely almost entirely on spreadsheets prepared for this Investigation, with little or no supporting documentation to corroborate the claimed expenditures or to identify the sources of critical assumptions. Nor did Mr. McGavock consider or opine on the reasonableness of the allocation methodologies. Tr. [McGavock] 548:13-20 (testifying that he used "the same categories and employ[ed] the same methodology that Mr. Young described"). These failures are fatal and infect each of Complainants' claimed expenditures.

b. Complainants' Claimed Expenditures Are Overstated.

(1) Masimo R&D Labor

Complainants claim expenditures for [redacted] that they attribute to the rainbow line of products. As discussed above, Complainants fail to explain on what the R&D employees were actually working, how those activities relate to the rainbow products, or whether Complainants' allocations are reasonable. As discussed above, the ***only*** testimony offered during the evidentiary hearing regarding Complainants' R&D expenditures was from Mr. Young

who stated only that the method employed to calculate the rainbow R&D expenditures was the same faulty approach used to calculate for the Masimo Watch. Tr. [Young] 500:8-22; Tr. [Thomas] 1309:16-1310:3. Moreover, by using overall R&D expenses from Masimo's Form 10-K (Tr. [Young] 500:8-22), Complainants appear to include allocated plant and equipment expenses, overstating the labor and capital expenses cognizable under subsection (B).

(2) Cercacor R&D Labor

Complainants claim expenditures for R&D conducted by Cercacor, which they attribute to the rainbow line of products, are quantified by repurposing calculations prepared as part of Cercacor's . Tr. [Hammarth] 523:22-524:2; RX-1201C [Hammarth Dep.] 86:6-10. Complainants, however, offer no corroborating documentation or explanation of how this exercise provides a reliable basis for allocations necessary for the economic prong requirement. All that was offered during the hearing was Mr. Hammarth's conclusion that the "data [shown in CX-0644C (Appendix K)] is still good." Tr. [Hammarth] 524:16-525:15. Complainants also fail to show that the R&D projects identified in Cercacor's R&D expenditures are exclusively related to the rainbow DI article(s), as opposed to non-DI products and projects. For example, Complainants' expenditures Tr. [Hammarth] 532:5-13. Mr. Hammarth also identified RX-1201C [Hammarth Dep.] 81:21-83:5; Tr. [Hammarth] 527:12-528:22. Complainants allocate the costs associated with each of these products and projects to rainbow,

without (i) any allocation for the

(3) Manufacturing Labor

Complainants rely on but offer no evidence or testimony to support those claimed investments. Complainants' calculations are based on a COGS analysis for sample products that have not been shown to be representative of the rainbow DI products. Tr. [Young] 505:19-506:15; CDX-0006C.037. Mr. McGavock failed to perform any analysis or cite to any corroborating evidence supporting the reliability of this methodology, *id.*; Tr. [McGavock] 571:2-22, despite the wide variability the claimed U.S. portion of the ***just the selected products***: . *See* CX-0642C [Appendix U], Summary tab, column E.

(4)

As discussed above, with respect to claimed plant and equipment expenses, Complainants rely on a flawed and unreliable methodology to quantify claimed labor expenses for . CDX-0015C.016. Complainants provided no explanation for the or how those activities relate to the rainbow DI article(s), and they use (CX-0641C [Appendix I], , without explaining why they did not simply use the relevant records for those years.

c. Complainants Improperly Rely on Non-

Apart from the unreliability of the claimed manufacturing expenses, Complainants fail to show that are domestically sourced or otherwise properly cognizable, in absence of any evidence of an

[redacted]

accompanying "increase of investment or employment in the United States." *Lelo*, 786 F.3d at 885.

d. Complainants Have Failed To Demonstrate "Significance" in an Appropriate Context.

As with plant and equipment, Complainants have not shown that the claimed labor or capital expenditures are quantitatively or qualitatively significant in an appropriate context. ***First***, as discussed above in Section VII.A.2.d, Mr. McGavock did not offer any qualitative significance opinion and Complainants ignore that rainbow [redacted] ***Second***, with respect to quantitative significance, Mr. McGavock provides no quantitative comparison including all his claimed investments under subsection (B). Tr. [McGavock] 549:8-550:2. Instead, Mr. McGavock's significance analysis for subsection (B) rests solely on a comparison of COGS incurred in and outside the U.S. and an [redacted]. *Id.* However, as discussed above in Section VII.A.2.d, the COGS analysis on which Mr. McGavock relies—without any independent verification—[redacted]. The calculation also includes the [redacted], which is necessary to support a finding of a domestic industry. *Lelo*, 786 F.3d at 885; *Certain Television Sets*, Inv. No. 337-TA-910, Comm'n Op. at 63-64 (Oct. 30, 2015) ("Cresta's evidence of payments to domestic suppliers is insufficient to meet the requirements set out by the Federal Circuit in *Lelo*[.]"). And Complainants, including Mr. McGavock, offer no evidence that [redacted] was indeed dedicated to the rainbow DI article(s).

[redacted]

VIII. REMEDY AND BONDING

A. Any Remedy Should Be Narrowly Tailored To Permit Service, Repair, and Replacement For Existing Customers and Contain a Certification Provision.

If a violation is found, any remedial order should permit the continued service, repair, or replacement of previously purchased products, including software maintenance and updates. The Commission has broad discretion in determining the scope of remedial orders, *Hyundai Elec. Indus. Co. v. USITC,* 899 F.2d 1204, 1208-09 (Fed. Cir. 1990), and has frequently adopted service and repair exceptions to protect consumers. *See*, *e.g.*, *Certain Electronic Devices,* Inv. No. 337-TA-794, Comm'n Op. at 114-15 (July 5, 2013) (excepting imports of replacement handsets); *Certain Mobile Devices,* Inv. No. 337-TA-744, Comm'n Op. at 21-22 (June 5, 2012) (exempting service and replacement parts). Complainants did not address the warranty exception in their Prehearing Brief, and therefore waived any argument on the issue. *Compare* CX-1248C (2/11/22 Apple Interrogatory Responses) at 33-35 (contention regarding warranty exception) *with* CPHB at 237-38 (no argument on warranty exception).

The Accused Apple Watches are sold with a standard warranty providing for repair or replacement of articles with manufacturing defects (Tr. [Land] 968:11-18; RX-0929 [standard warranty]; RX-0930 [same]) and customers may purchase an extended warranty through the AppleCare program. RX-0926 [AppleCare]. Apple also provides repair services for units that are beyond the warranty period. RX-0927 [Apple Service and Repair]. Apple Watch customers depend on Apple for service and repair, [redacted] Tr. [Land] 968:19-969:1; RX-0928C [Product Warranty Data].

Any exclusion order should also include a standard certification provision. *Certain Composite Aerogel Insulation Materials*, Inv. No. 337-TA-1003, Comm'n Op. at 62 (Feb. 22, 2018) (adopting standard certification provision).

[redacted]

B. No Bond Should Be Imposed During The Presidential Review Period.

If the Commission issues a remedial order, it should set a zero bond rate. The complainant "bears the burden of establishing the need for a bond amount in the first place," *Certain Electronic Devices*, Inv. No. 337-TA-794, Comm'n Op. at 117, and the bond should not exceed an amount sufficient to "offset any competitive advantage ***resulting from the unfair method of competition*** or unfair act" found by the Commission. S. Rep. No. 1298, 93rd Cong., 2d Sess. 198 (1974). Complainants have not identified any DI products that compete with the accused Apple Watch products, and therefore have not shown the need for any bond. *Certain Electronic Devices*, Inv. No. 337-TA-794, Comm'n Op. at 118-19 (setting bond at zero where no competing DI products).

The Accused Apple Watches are wearable consumer electronic devices with a wide range of functions. Tr. [Land] 971:10-972:13; RX-319 [Watch Series 6 specification]; RX-306 [Watch Series 7 specification]. Masimo's "Rainbow" sensors are designed for and distributed primarily through health care providers for use in conjunction with clinical services (Complaint, ¶¶11-14, 20), and those sensors do not compete with Apple Watch in any stores. Tr. [Kiani] 181:2-7. Complainants' other alleged DI product, the "Masimo Watch," is not available in the U.S. in any store or the open commercial market. Tr. [Kiani] 179:17-22; Tr. [Young] 513:17-23. No price comparison is possible because Complainants have no reported U.S. sales of the "Masimo Watch." Tr. [Thomas] 1310:14-20; Tr. [Young] 514:10-19.

Complainants' novel claim of a "risk of injury" to Masimo from a generalized "harm to consumer perception" concerning watch-based sensors (Tr. [McGavock] 551:15) piles speculation upon speculation: it rests on snippets of news articles, unsupported by any actual consumer surveys or studies, and then projects a purely hypothetical impact on future sales of products not available on the open market through unsubstantiated assumptions regarding consumer behavior. Tr.

[redacted]

[McGavock] 550:20-551:17; Tr. [Thomas] 1310:21-1311:3. Mr. McGavock's theory of ***negative*** consumer perceptions of the pulse oximetry feature in Apple Watch as supporting a bond requirement runs headlong into ***Mr. McGavock's own contradictory*** theory of commercial success, i.e., ***positive*** consumer perceptions, based on ***that same feature*** in Apple Watch. Tr. [McGavock] 1439:2-10. Finally, any such amorphous impact on "consumer perception" is legally irrelevant, as completely unrelated to the alleged "unfair method of competition"—patent infringement—at issue in this Investigation.

[redacted]

Dated: September 2, 2022

Respectfully Submitted,

/s/ Sarah R. Frazier
Mark D. Selwyn
WILMER CUTLER PICKERING
HALE AND DORR LLP
2600 El Camino Real
Suite 400
Palo Alto, CA 94306
Telephone: (650) 858-6031

Joseph J. Mueller
Richard Goldenberg
Sarah R. Frazier
WILMER CUTLER PICKERING
HALE AND DORR LLP
60 State Street
Boston, MA 02109
Telephone: (617) 526-6000

Michael D. Esch
David Cavanaugh
WILMER CUTLER PICKERING
HALE AND DORR LLP
1875 Pennsylvania Ave., NW
Washington, DC 20006
Telephone: (202) 663-6000

Counsel for Respondent Apple Inc.

Appendix A – [redacted] Domestic Industry Exhibits

Exhibit	Description	Document Date[1]
CX-0392C	Masimo Watch Instrument Board Schematic	[redacted]
CX-0494C	Clinical Study Test Results	[redacted]
CX-0536C	CPX-58 Sensor Circuit Board Drawing	[redacted]
CX-0593C	Masimo Watch CAD File	[redacted]
CX-0594C	Masimo Watch Article CAD File	[redacted]
CX-0595C	Masimo Watch Assembly Drawing	[redacted]
CX-0600C	Masimo Watch Article CAD File	[redacted]
CX-0605C	Masimo Watch Article CAD File	[redacted]
CX-0606C	Masimo Watch Article CAD File	[redacted]
CX-0612C	Masimo Watch Go To Market Plan	[redacted]
CX-0626C	US Mix of Rainbow Sales Analysis Spreadsheet	[redacted]
CX-0652C	Photograph of CPX-19 (front)	[redacted]
CX-0653C	Photograph of CPX-19 (back)	[redacted]
CX-0654C	Photograph of CPX-20 (front)	[redacted]
CX-0655C	Photograph of CPX-20 (back)	[redacted]
CX-0656C	Photograph of CPX-21 (back)	[redacted]

[1] Dates in this column are based on document metadata unless otherwise noted.

Exhibit	Description	Document Date[1]
		[redacted]
CX-0665C	Photograph of CPX-58 (front)	
CX-0666C	Photograph of CPX-58 (back)	
CX-0675C	Photograph of CPX-65 (front)	
CX-0676C	Photograph of CPX-65 (back)	
CX-0680C	Masimo Manufacturing Video	
CX-0682C	Purchase Order for Masimo Devices	
CX-0685C	Masimo Watch System Information Guide	
CX-0701C	CPX-52 Sensor Circuit Board Schematic (copy produced earlier at MASITC_00526571)	
CX-0704C	Circuit Board Schematic (copy produced earlier at MASITC_00966488, CX-530C)	
CX-0705C	Sensor Circuit Board Schematic (copy produced earlier at MASITC_00584761)	
CX-0709C	Instrument Board Drawing (copy produced earlier at MASITC_00974668)	

Exhibit	Description	Document Date[1]
CX-0710C	CPX-58 Sensor Circuit Board Schematic (copy produced earlier at MASITC_00584754)	[redacted]
CX-0772C	Photograph of CPX-146	[redacted]
CX-0778C	Photos from Arab Health 2022	[redacted]
CX-0784C	Photographs of Masimo Watch	[redacted]
CX-0789C	Photos from Arab Health 2022	[redacted]
CX-0790C	Photograph of CPX-146 (Masimo W1) on Wrist	[redacted]
CX-0801C	Masimo Watch Component Schematic	[redacted]
CX-0805C	Masimo Watch Component Assembly Drawing (copy produced earlier at MASITC_00584715, cx-0391C and MASITC_00975855)	[redacted]
CX-0806C	Masimo Watch Component BOM	[redacted]
CX-0812C	Photograph of CPX-65 (side profile)	[redacted]
CX-0814C	Photograph of CPX-19 (side profile)	[redacted]
CX-0815C	Photograph of CPX-58 (side profile)	[redacted]
CX-0835C	Photographs of Masimo Facilities	[redacted]
CX-0836C	Photographs of Demonstrations of Masimo Physicals	[redacted]
CX-1038C	Collection of Images from Apple's Inspection of Masimo Physicals, Oct. 20, 2021	[redacted]
CX-1058C	Collection of Images from Apple's Inspection of Masimo Physicals, Nov. 10, 2021	[redacted]
CX-1062C	Collection of Images from Apple's Inspection of Masimo Physicals, Nov. 10, 2021	[redacted]
CX-1068C	Video of Images from Apple's Inspection of Masimo Physicals, Nov. 10, 2021	[redacted]
CX-1069C	Video of Apple's Inspection of Masimo Physicals, Nov. 10, 2021	[redacted]
CX-1072C	Video of Apple's Inspection of Masimo Physicals, Nov. 10, 2021	[redacted]
CX-1074C	Video of Apple's Inspection of Masimo Physicals, Nov. 10, 2021	[redacted]
CX-1128C	Screenshots from MASITC_00976047	[redacted]
CX-1129C	Screenshots from MASITC_00976130	[redacted]
CX-1132C	Screenshots from MASITC_01060793	[redacted]
CX-1137C	Screenshots from MASITC_01060827	[redacted]
CX-1185C	Bill of Materials	[redacted]
CX-1415C	Photograph of CPX-20 (side profile)	[redacted]
CX-1637	Masimo Fourth Quarter & Full Year 2021 Results, February 15, 2022	[redacted]

Exhibit	Description	Document Date[1]
CPX-0020C	Masimo Watch Article	[redacted]
CPX-0019C	Masimo Watch Article	
CPX-0146C	Masimo Watch Article	
CPX-0155C	Masimo Watch Article	
CPX-0157C	Masimo Watch Article	
CPX-0012C	Laptop	
CPX-0021C	Masimo Watch Article	
CPX-0058C	Masimo Watch Article	

Exhibit	Description	Document Date[1]
CPX-0065C	Masimo Watch Article	[redacted]
CPX-0020aC	Photograph of Masimo Watch Article	[redacted]
CPX-0019aC	Photograph of Masimo Watch Article	[redacted]
CPX-0146aC	Photograph of Masimo Watch (W1)	[redacted]
CPX-0155aC	Photograph of Masimo Watch (W1)	[redacted]
CPX-0156aC	Photograph of Masimo Watch (W1)	[redacted]
CPX-0157aC	Photograph of Masimo Watch (W1)	[redacted]
CPX-0012aC	Photograph of Laptop	[redacted]

Exhibit	Description	Document Date[1]
		[redacted]
CPX-0021aC	Photograph of Masimo Watch Article	[redacted]
CPX-0058aC	Photograph of Masimo Watch Article	[redacted]
CPX-0065aC	Photograph of Masimo Watch Article	[redacted]
RX-1467	Masimo, Medical Monitoring Pioneer Announces the Limited Market Release of the Masimo W1 Watch for Consumers, May 2, 2022, https://www.businesswire.com/news/home/20220502005318/en/	[redacted]

CERTAIN LIGHT-BASED PHYSIOLOGICAL MEASUREMENT DEVICES AND COMPONENTS THEREOF

Inv. No. 337-TA-1276

CERTIFICATE OF SERVICE

I, Rebecca L. Middleton, hereby certify that true and correct copies of the foregoing, **PUBLIC VERSION OF RESPONDENT APPLE INC.'S SECOND CORRECTED POST-HEARING BRIEF**, have been filed and served on this 14th day of September 2022, on the following in the manner indicated:

The Honorable Lisa R. Barton Secretary **U.S. International Trade Commission** 500 E Street, S.W. Washington, DC 20436	☒ Via Electronic Filing ☐ Via Hand Delivery (2 Copies) ☐ Via Overnight Delivery
The Honorable Monica Bhattacharyya Administrative Law Judge **U.S. International Trade Commission** 500 E Street, S.W., Room 317 Washington, DC 20436	☐ Via Hand Delivery (2 Copies) ☐ Via Overnight Delivery ☐ Via Facsimile ☒ Via Electronic Mail edward.jou@usitc.gov michael.maas@usitc.gov
Stephen C. Jensen Joseph R. Re Sheila N. Swaroop Ted. M. Cannon Alan G. Laquer Kendall M. Loebbaka **KNOBBE, MARTENS, OLSON & BEAR, LLP** 2040 Main Street Fourteenth Floor Irvine, CA 92614 William R. Zimmerman Jonathan E. Bachand **KNOBBE, MARTENS, OLSON & BEAR, LLP** 1717 Pennsylvania Avenue N.W., Suite 900 Washington, DC 20006 Brian C. Horne **KNOBBE, MARTENS, OLSON & BEAR, LLP** 1925 Century Park East Suite 600 Los Angeles, CA 90067 Karl W. Kowalis	☐ Via Hand Delivery (2 Copies) ☐ Via Overnight Delivery ☐ Via Facsimile ☒ Via Electronic Mail masimo.appleitc@knobbe.com

Matthew S. Friedrichs **KNOBBE, MARTENS, OLSON & BEAR, LLP** 1155 Avenue of the Americas 24th Floor New York, NY 10036 *Counsel for Complainants*	

/s/ Rebecca L. Middleton
Rebecca L. Middleton