US010627783B2

(12) **United States Patent**
Rothkopf et al.

(10) **Patent No.: US 10,627,783 B2**
(45) **Date of Patent: Apr. 21, 2020**

(54) **WEARABLE ELECTRONIC DEVICE**

(71) Applicant: **Apple Inc.**, Cupertino, CA (US)

(72) Inventors: **Fletcher R. Rothkopf**, Cupertino, CA (US); **Jonathan Ive**, San Francisco, CA (US); **Julian Hoenig**, San Francisco, CA (US); **Rico Zorkendorfer**, San Francisco, CA (US)

(73) Assignee: **APPLE INC.**, Cupertino, CA (US)

(*) Notice: Subject to any disclaimer, the term of this patent is extended or adjusted under 35 U.S.C. 154(b) by 0 days.

(21) Appl. No.: **15/261,917**

(22) Filed: **Sep. 10, 2016**

(65) **Prior Publication Data**

US 2016/0378071 A1 Dec. 29, 2016

Related U.S. Application Data

(63) Continuation of application No. 14/842,617, filed on Sep. 1, 2015.

(Continued)

(51) **Int. Cl.**
G04G 17/02 (2006.01)
G04G 21/02 (2010.01)

(Continued)

(52) **U.S. Cl.**
CPC ***G04G 17/02*** (2013.01); ***A61B 5/0205*** (2013.01); ***A61B 5/0261*** (2013.01); ***A61B 5/0295*** (2013.01); ***A61B 5/14551*** (2013.01); ***A61B 5/681*** (2013.01); ***G04B 39/02*** (2013.01); ***G04G 21/025*** (2013.01); ***G06F 1/163*** (2013.01);

(Continued)

(58) **Field of Classification Search**
None
See application file for complete search history.

(56) **References Cited**

U.S. PATENT DOCUMENTS

2,237,860 A 4/1941 Bolle
2,288,215 A 6/1942 Taubert et al.

(Continued)

FOREIGN PATENT DOCUMENTS

CH 1888928 1/1937
CN 1302740 9/2001

(Continued)

OTHER PUBLICATIONS

Author Unknown, "Desirable Android Wear smartwatch from LG," Gulf News, Dubai, 3 pages, Jan. 30, 2015.

(Continued)

Primary Examiner — Brian T Gedeon
(74) *Attorney, Agent, or Firm* — Brownstein Hyatt Farber Schreck, LLP

(57) **ABSTRACT**

A consumer product that is a portable and, in some cases, a wearable electronic device. The wearable electronic device may have functionalities including: keeping time; monitoring a user's physiological signals and providing health-related information based on those signals; communicating with other electronic devices or services; visually depicting data on a display; gather data form one or more sensors that may be used to initiate, control, or modify operations of the device; determine a location of a touch on a surface of the device and/or an amount of force exerted on the device, and use either or both as input.

20 Claims, 26 Drawing Sheets

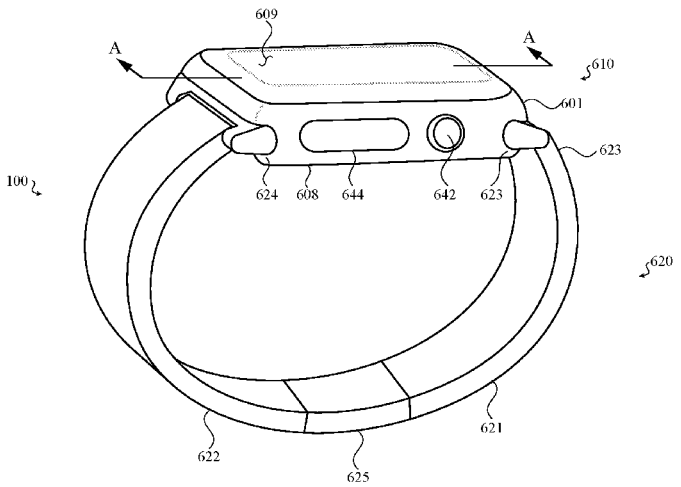

Masimo Ex. 1025
IPR Petition - US D947,842

Related U.S. Application Data

(60) Provisional application No. 62/044,974, filed on Sep. 2, 2014.

(51) **Int. Cl.**

A61B 5/0295	(2006.01)
A61B 5/00	(2006.01)
A61B 5/0205	(2006.01)
A61B 5/026	(2006.01)
A61B 5/1455	(2006.01)
G06F 1/16	(2006.01)
G06F 3/01	(2006.01)
G04B 39/02	(2006.01)
A61B 5/024	(2006.01)
A61B 5/08	(2006.01)
G04B 3/04	(2006.01)
G04G 13/00	(2006.01)

(52) **U.S. Cl.**

CPC ***G06F 1/169*** (2013.01); ***G06F 1/1643*** (2013.01); ***G06F 3/015*** (2013.01); ***G06F 3/016*** (2013.01); *A61B 5/02427* (2013.01); *A61B 5/02438* (2013.01); *A61B 5/0816* (2013.01); *A61B 5/14552* (2013.01); *G04B 3/04* (2013.01); *G04G 13/00* (2013.01)

(56) **References Cited**

U.S. PATENT DOCUMENTS

2,497,935 A 2/1950 Feurer
2,771,734 A 11/1956 Morf
2,788,236 A 4/1957 Kafowi
2,797,592 A 7/1957 Marrapese
3,040,514 A 6/1962 Dinstman
3,056,030 A 9/1962 Kelchner
3,130,539 A 4/1964 Davis
3,355,873 A 12/1967 Morf
3,362,154 A 1/1968 Perret
3,410,247 A 11/1968 Dronberger
3,495,398 A 2/1970 Widmer et al.
3,577,876 A * 5/1971 Spadini G04C 21/34 368/250
3,621,649 A 11/1971 Vulcan et al.
3,662,618 A 5/1972 Kroll et al.
3,733,803 A 5/1973 Hiraga
4,007,347 A 2/1977 Haber
4,031,341 A 6/1977 Wuthrich et al.
4,037,068 A 7/1977 Gaynor
4,077,200 A 3/1978 Schneider
4,133,404 A 1/1979 Griffin
4,170,104 A 10/1979 Yamagata
4,258,096 A 3/1981 LaMarche
4,287,400 A 9/1981 Kitik
4,289,400 A 9/1981 Kubola et al.
4,311,026 A 1/1982 Ochoa
4,311,990 A 1/1982 Burke
4,324,956 A 4/1982 Sakakino et al.
4,345,119 A 8/1982 Latasiewicz
4,364,674 A 12/1982 Tesch
4,379,642 A 4/1983 Meyrat
4,395,134 A 7/1983 Luce
4,396,298 A 8/1983 Ripley
4,417,824 A 11/1983 Paterson et al.
4,520,306 A 5/1985 Kirby
4,581,509 A 4/1986 Sanford et al.
4,600,316 A 7/1986 Besson
4,617,461 A 10/1986 Subbarao et al.
4,634,861 A 1/1987 Ching et al.
4,641,026 A 2/1987 Garcia, Jr.
4,670,737 A 6/1987 Rilling
4,766,642 A 8/1988 Gaffney et al.
4,783,772 A 11/1988 Umemoto et al.
4,884,073 A 11/1989 Souloumiac
4,914,831 A 4/1990 Kanezashi et al.
4,922,070 A 5/1990 Dorkinski
4,931,794 A 6/1990 Haag
4,952,799 A 8/1990 Loewen
4,980,685 A 12/1990 Souloumiac et al.
4,987,299 A 1/1991 Kobayashi et al.
5,034,602 A 7/1991 Garcia et al.
5,177,355 A 1/1993 Branan
5,214,278 A 5/1993 Banda
5,258,592 A 11/1993 Nishikawa et al.
5,288,993 A 2/1994 Bidiville et al.
5,347,123 A 9/1994 Jackson et al.
5,383,166 A 1/1995 Gallay
5,471,054 A 11/1995 Watanabe
5,477,508 A 12/1995 Will
5,509,174 A 4/1996 Worrell
5,572,314 A 11/1996 Hyman et al.
5,583,560 A 12/1996 Florin et al.
5,631,881 A 5/1997 Pessey et al.
5,726,645 A 3/1998 Kamon et al.
5,748,111 A 5/1998 Bates
5,825,353 A 10/1998 Will
5,841,050 A 11/1998 Clift et al.
5,847,335 A 12/1998 Sugahara et al.
5,867,082 A 2/1999 Van Zeeland
5,943,233 A 8/1999 Ebina
5,953,001 A 9/1999 Challener et al.
5,960,366 A 9/1999 Duwaer et al.
5,963,332 A 10/1999 Feldman et al.
5,999,168 A 12/1999 Rosenberg et al.
6,069,567 A 5/2000 Zawilski
6,134,189 A 10/2000 Carrard
6,154,201 A 11/2000 Levin et al.
6,175,679 B1 1/2001 Veligdan et al.
6,241,684 B1 6/2001 Amano
6,246,050 B1 6/2001 Tullis et al.
6,252,825 B1 6/2001 Perotto
6,304,247 B1 10/2001 Black
6,355,891 B1 3/2002 Ikunami
6,361,502 B1 3/2002 Puolakanaho et al.
6,377,239 B1 4/2002 Isikawa
6,392,640 B1 5/2002 Will
6,396,006 B1 5/2002 Yokoji et al.
6,422,740 B1 7/2002 Leuenberger
6,477,117 B1 11/2002 Narayanaswami et al.
6,502,982 B1 1/2003 Bach et al.
6,525,278 B2 2/2003 Villain et al.
6,556,222 B1 4/2003 Narayanaswami
6,575,618 B1 6/2003 Inoue et al.
6,587,400 B1 7/2003 Line
6,646,635 B2 11/2003 Pogatetz et al.
6,661,438 B1 11/2003 Billman
6,672,758 B2 1/2004 Ehrsam et al.
6,794,992 B1 9/2004 Rogers
6,809,275 B1 10/2004 Cheng et al.
6,834,430 B2 12/2004 Worrell
6,846,998 B2 1/2005 Hasumi et al.
6,882,596 B2 4/2005 Guanter
6,888,076 B2 5/2005 Hetherington
6,896,403 B1 5/2005 Gau
6,909,378 B1 6/2005 Lambrechts et al.
6,914,551 B2 7/2005 Vidal
6,961,099 B2 11/2005 Takano et al.
6,963,039 B1 11/2005 Weng et al.
6,967,903 B2 11/2005 Guanter
6,977,868 B2 12/2005 Brewer et al.
6,982,930 B1 1/2006 Hung
6,985,107 B2 1/2006 Anson
6,987,568 B2 1/2006 Dana
6,998,553 B2 2/2006 Hisamune et al.
7,016,263 B2 3/2006 Gueissaz et al.
7,021,442 B2 4/2006 Borgerson
7,034,237 B2 4/2006 Ferri et al.
7,081,905 B1 7/2006 Raghunath et al.
7,102,626 B2 9/2006 Denny, III
7,111,365 B1 9/2006 Howie, Jr.
7,113,450 B2 9/2006 Plancon et al.
7,119,289 B2 10/2006 Lacroix
7,135,673 B2 11/2006 Saint Clair

Masimo Ex. 1025
IPR Petition - US D947,842

(56) **References Cited**

U.S. PATENT DOCUMENTS

7,167,083 B2 1/2007 Giles
7,244,927 B2 7/2007 Huynh
7,255,473 B2 8/2007 Hiranuma et al.
7,265,336 B2 9/2007 Hataguchi et al.
7,274,303 B2 9/2007 Dresti et al.
7,285,738 B2 10/2007 Lavigne et al.
7,286,063 B2 10/2007 Gauthey
7,292,741 B2 11/2007 Ishiyama et al.
7,358,481 B2 4/2008 Yeoh et al.
7,369,308 B2 5/2008 Tsuruta et al.
7,371,745 B2 5/2008 Ebright et al.
7,385,874 B2 6/2008 Vuilleumier
7,404,667 B2 7/2008 Born et al.
7,465,917 B2 12/2008 Chin et al.
7,468,036 B1 12/2008 Rulkov et al.
7,506,269 B2 3/2009 Lang et al.
7,520,664 B2 4/2009 Wai
7,528,824 B2 5/2009 Kong
7,545,367 B2 6/2009 Sunda et al.
7,591,582 B2 9/2009 Hiranuma et al.
7,593,755 B2 9/2009 Colando et al.
7,605,846 B2 10/2009 Watanabe
7,634,263 B2 12/2009 Louch et al.
7,646,677 B2 1/2010 Nakamura
7,655,874 B2 2/2010 Akieda
7,682,070 B2 * 3/2010 Burton G04B 37/0008 368/294
7,708,457 B2 5/2010 Girardin
7,710,456 B2 5/2010 Koshiba et al.
7,732,724 B2 6/2010 Otani et al.
7,761,246 B2 7/2010 Matsui
7,763,819 B2 7/2010 Ieda et al.
7,772,507 B2 8/2010 Orr
7,778,115 B2 8/2010 Ruchonnet
7,781,726 B2 8/2010 Matsui et al.
RE41,637 E 9/2010 O'Hara et al.
7,791,588 B2 9/2010 Tierling et al.
7,791,597 B2 9/2010 Silverstein et al.
7,822,469 B2 10/2010 Lo
7,856,255 B2 12/2010 Tsuchiya et al.
7,858,583 B2 12/2010 Schmidt et al.
7,865,324 B2 1/2011 Lindberg
7,894,957 B2 2/2011 Carlson
7,946,758 B2 5/2011 Mooring
8,063,892 B2 11/2011 Shahoian et al.
8,138,488 B2 3/2012 Grot
8,143,981 B2 3/2012 Washizu et al.
8,167,126 B2 5/2012 Stiehl
8,169,402 B2 5/2012 Shahoian et al.
8,188,989 B2 5/2012 Levin et al.
8,195,313 B1 6/2012 Fadell et al.
8,229,535 B2 * 7/2012 Mensinger A61B 5/7445 600/345
8,248,815 B2 8/2012 Yang et al.
8,263,886 B2 9/2012 Lin et al.
8,263,889 B2 9/2012 Takahashi et al.
8,275,327 B2 9/2012 Yi et al.
8,294,670 B2 10/2012 Griffin et al.
8,312,495 B2 11/2012 Vanderhoff
8,368,677 B2 2/2013 Yamamoto
8,371,745 B2 2/2013 Manni
8,373,661 B2 2/2013 Lan et al.
8,410,971 B2 4/2013 Friedlander
8,432,368 B2 4/2013 Momeyer et al.
8,439,559 B2 5/2013 Luk et al.
8,441,450 B2 5/2013 Degner et al.
8,446,713 B2 5/2013 Lai
8,456,430 B2 6/2013 Oliver et al.
8,477,118 B2 7/2013 Lan et al.
8,493,190 B2 7/2013 Periquet et al.
8,508,511 B2 8/2013 Tanaka et al.
8,525,777 B2 9/2013 Stavely et al.
8,562,489 B2 10/2013 Burton et al.
8,568,313 B2 10/2013 Sadhu
8,576,044 B2 11/2013 Chapman
8,593,598 B2 11/2013 Chen et al.
8,607,662 B2 12/2013 Huang
8,614,881 B2 12/2013 Yoo
8,783,944 B2 2/2014 Doi
8,666,682 B2 3/2014 LaVigne et al.
8,677,285 B2 3/2014 Tsern et al.
8,704,787 B2 4/2014 Yamamoto
8,711,093 B2 4/2014 Ong et al.
8,724,087 B2 5/2014 Van De Kerkhof et al.
8,730,167 B2 5/2014 Ming et al.
8,743,088 B2 6/2014 Watanabe
8,816,962 B2 8/2014 Obermeyer et al.
8,824,245 B2 9/2014 Lau et al.
8,847,741 B2 9/2014 Birnbaum et al.
8,859,971 B2 10/2014 Weber
8,860,674 B2 10/2014 Lee et al.
8,863,219 B2 10/2014 Brown et al.
D717,679 S 11/2014 Anderssen
8,878,657 B2 11/2014 Periquet et al.
8,885,856 B2 11/2014 Sacha
8,895,911 B2 11/2014 Takahashi
8,905,631 B2 12/2014 Sakurazawa et al.
8,908,477 B2 12/2014 Peters
8,920,022 B2 12/2014 Ishida et al.
8,922,399 B2 12/2014 Bajaj et al.
8,928,452 B2 1/2015 Kim et al.
8,954,135 B2 2/2015 Yuen et al.
8,975,543 B2 3/2015 Hakemeyer
8,994,827 B2 3/2015 Mistry et al.
9,001,625 B2 4/2015 Essery et al.
9,024,733 B2 5/2015 Wouters
9,028,134 B2 5/2015 Koshoji et al.
9,030,446 B2 5/2015 Mistry et al.
9,034,666 B2 5/2015 Vaganov et al.
9,039,614 B2 5/2015 Yuen et al.
9,041,663 B2 5/2015 Westerman
9,042,971 B2 5/2015 Brumback et al.
9,052,696 B2 6/2015 Breuillot et al.
9,086,717 B2 7/2015 Meerovitsch
9,086,738 B2 7/2015 Leung et al.
9,101,184 B2 8/2015 Wilson
9,105,413 B2 8/2015 Hiranuma et al.
9,123,483 B2 9/2015 Ferri et al.
9,141,087 B2 9/2015 Brown et al.
9,176,577 B2 11/2015 Jangaard et al.
9,176,598 B2 11/2015 Sweetser et al.
9,202,372 B2 12/2015 Reams et al.
9,213,409 B2 12/2015 Redelsheimer et al.
9,223,296 B2 12/2015 Yang et al.
9,241,635 B2 1/2016 Yuen et al.
9,244,438 B2 1/2016 Hoover et al.
9,256,209 B2 2/2016 Yang et al.
9,277,156 B2 3/2016 Bennett et al.
9,350,850 B2 5/2016 Pope et al.
9,386,932 B2 7/2016 Chatterjee et al.
9,426,275 B2 8/2016 Eim et al.
9,430,042 B2 8/2016 Levin
9,437,357 B2 9/2016 Furuki et al.
9,449,770 B2 9/2016 Sanford et al.
9,501,044 B2 11/2016 Jackson et al.
9,520,100 B2 12/2016 Houjou et al.
9,532,723 B2 1/2017 Kim
9,545,541 B2 1/2017 Aragones et al.
9,552,023 B2 1/2017 Joo et al.
9,599,964 B2 3/2017 Gracia
9,607,505 B2 3/2017 Rothkopf et al.
9,620,312 B2 4/2017 Ely et al.
9,627,163 B2 4/2017 Ely
9,632,318 B2 4/2017 Goto et al.
9,651,922 B2 5/2017 Hysek et al.
9,659,482 B2 5/2017 Yang et al.
9,680,831 B2 6/2017 Jooste et al.
D800,172 S 10/2017 Akana
9,800,717 B2 10/2017 Ma et al.
9,836,025 B2 12/2017 Ely et al.
9,898,032 B2 2/2018 Hafez et al.
9,939,923 B2 4/2018 Sharma
9,946,297 B2 4/2018 Nazzaro et al.
9,971,305 B2 5/2018 Ely et al.

Masimo Ex. 1025
IPR Petition - US D947,842

(56) **References Cited**

U.S. PATENT DOCUMENTS

9,971,405 B2 5/2018 Holenarsipur et al.
9,979,426 B2 5/2018 Na et al.
10,001,817 B2 6/2018 Zambetti et al.
10,092,203 B2 10/2018 Mirov
10,114,342 B2 10/2018 Kim et al.
10,209,148 B2 2/2019 Lyon et al.
10,331,082 B2 6/2019 Ely et al.
2003/0174590 A1 9/2003 Arikawa et al.
2004/0047244 A1 3/2004 Iino et al.
2004/0082414 A1 4/2004 Knox
2004/0130971 A1 7/2004 Ecoffet et al.
2004/0264301 A1 12/2004 Howard et al.
2005/0075558 A1 4/2005 Vecerina et al.
2005/0088417 A1 4/2005 Mulligan
2006/0250377 A1 11/2006 Zadesky et al.
2007/0013775 A1 1/2007 Shin
2007/0050054 A1 3/2007 Sambandam Guruparan et al.
2007/0211042 A1 9/2007 Kim et al.
2007/0222756 A1 9/2007 Wu et al.
2007/0229671 A1 10/2007 Takeshita et al.
2007/0247421 A1 10/2007 Orsley et al.
2008/0130914 A1 6/2008 Cho
2009/0051649 A1 2/2009 Rondel
2009/0073119 A1 3/2009 Le et al.
2009/0122656 A1 5/2009 Bonnet et al.
2009/0146975 A1 6/2009 Chang
2009/0152452 A1 6/2009 Lee et al.
2009/0217207 A1 8/2009 Kagermeier et al.
2009/0285443 A1 11/2009 Camp et al.
2009/0312051 A1 12/2009 Hansson et al.
2010/0033430 A1 2/2010 Kakutani et al.
2010/0053468 A1 3/2010 Havrill
2010/0081375 A1 4/2010 Rosenblatt et al.
2010/0149099 A1 6/2010 Elias
2011/0003665 A1* 1/2011 Burton G04F 10/00 482/9
2011/0007468 A1 1/2011 Burton et al.
2011/0090148 A1 4/2011 Li et al.
2011/0158057 A1 6/2011 Brewer et al.
2011/0242064 A1 10/2011 Ono et al.
2011/0270358 A1 11/2011 Davis et al.
2012/0067711 A1 3/2012 Yang
2012/0068857 A1 3/2012 Rothkopf et al.
2012/0075082 A1 3/2012 Rothkopf et al.
2012/0112859 A1 5/2012 Park et al.
2012/0113044 A1 5/2012 Strazisar et al.
2012/0177237 A1 7/2012 Shukla et al.
2012/0206248 A1 8/2012 Biggs
2012/0272784 A1 11/2012 Bailey et al.
2013/0037396 A1 2/2013 Yu
2013/0087443 A1 4/2013 Kikuchi
2013/0191220 A1 7/2013 Dent et al.
2013/0235704 A1 9/2013 Grinberg
2013/0261405 A1 10/2013 Lee et al.
2013/0335196 A1 12/2013 Zhang et al.
2014/0071050 A1 3/2014 Armstrong-Muntner
2014/0071098 A1 3/2014 You
2014/0073486 A1 3/2014 Ahmed et al.
2014/0132516 A1 5/2014 Tsai et al.
2014/0139486 A1* 5/2014 Mistry G06F 3/0304 345/175
2014/0197936 A1 7/2014 Biggs et al.
2014/0327630 A1 11/2014 Burr et al.
2014/0340318 A1 11/2014 Stringer et al.
2014/0347289 A1 11/2014 Suh et al.
2014/0368442 A1 12/2014 Vahtola
2014/0375579 A1 12/2014 Fujiwara
2015/0049059 A1 2/2015 Zadesky et al.
2015/0098309 A1 4/2015 Adams et al.
2015/0124415 A1* 5/2015 Goyal H05K 1/18 361/749
2015/0186609 A1* 7/2015 Utter, II A61B 5/0022 600/301
2015/0221460 A1 8/2015 Teplitxky et al.
2015/0227217 A1 8/2015 Fukumoto
2015/0320346 A1 11/2015 Chen
2015/0338642 A1 11/2015 Sanford
2015/0341031 A1 11/2015 Marquas et al.
2015/0366098 A1 12/2015 Lapetina et al.
2016/0018846 A1 1/2016 Zenoff
2016/0054813 A1 2/2016 Shediwy et al.
2016/0058375 A1 3/2016 Rothkopf et al.
2016/0061636 A1 3/2016 Gowreesunker et al.
2016/0062623 A1 3/2016 Howard et al.
2016/0069713 A1 3/2016 Ruh et al.
2016/0098016 A1 4/2016 Ely et al.
2016/0103985 A1 4/2016 Shim et al.
2016/0109861 A1 4/2016 Kim et al.
2016/0116306 A1 4/2016 Ferri et al.
2016/0147432 A1 5/2016 Shi et al.
2016/0168178 A1 6/2016 Misra
2016/0170598 A1 6/2016 Zambetti et al.
2016/0170608 A1 6/2016 Zambetti et al.
2016/0170624 A1 6/2016 Zambetti et al.
2016/0241688 A1 8/2016 Vossoughi
2016/0253487 A1 9/2016 Sarkar et al.
2016/0258784 A1 9/2016 Boonsom et al.
2016/0259301 A1 9/2016 Ely
2016/0306437 A1 10/2016 Zhang et al.
2016/0306446 A1 10/2016 Chung et al.
2016/0313703 A1 10/2016 Ely et al.
2016/0320583 A1 11/2016 Hall, Jr.
2016/0327911 A1 11/2016 Eim et al.
2016/0338642 A1 11/2016 Parara et al.
2016/0378069 A1 12/2016 Rothkopf et al.
2016/0378070 A1 12/2016 Rothkopf et al.
2016/0378072 A1 12/2016 Ely et al.
2017/0003655 A1 1/2017 Ely
2017/0010751 A1 1/2017 Shedletsky
2017/0011210 A1 1/2017 Cheong et al.
2017/0027461 A1 2/2017 Shin et al.
2017/0031449 A1 2/2017 Karsten et al.
2017/0045958 A1 2/2017 Battlogg et al.
2017/0061863 A1 3/2017 Eguchi
2017/0069443 A1 3/2017 Wang et al.
2017/0069444 A1 3/2017 Wang et al.
2017/0069447 A1 3/2017 Wang et al.
2017/0090599 A1 3/2017 Kuboyama
2017/0104902 A1 4/2017 Kim et al.
2017/0139489 A1 5/2017 Chen et al.
2017/0192391 A1 7/2017 Ely et al.
2017/0216519 A1 8/2017 Vouillamoz
2017/0216668 A1 8/2017 Burton et al.
2017/0238138 A1 8/2017 Aminzade
2017/0248986 A1 8/2017 Jackson et al.
2017/0251561 A1 8/2017 Fleck et al.
2017/0269715 A1 9/2017 Kim et al.
2017/0285404 A1 10/2017 Kubota et al.
2017/0301314 A1 10/2017 Kim et al.
2017/0307414 A1 10/2017 Ferri et al.
2017/0331869 A1 11/2017 Bendahan et al.
2017/0357465 A1 12/2017 Dzeryn et al.
2018/0018026 A1 1/2018 Bushnell et al.
2018/0024683 A1 1/2018 Ely et al.
2018/0136613 A1 5/2018 Ely et al.
2018/0136686 A1 5/2018 Jackson et al.
2018/0196517 A1 7/2018 Tan et al.
2018/0235491 A1 8/2018 Bayley et al.
2018/0239306 A1 8/2018 Ely
2018/0246469 A1 8/2018 Ely et al.
2018/0299834 A1 10/2018 Ely et al.
2018/0307363 A1 10/2018 Ely et al.
2018/0329368 A1 11/2018 Ely et al.
2018/0335891 A1 11/2018 Shedletsky et al.
2018/0341342 A1 11/2018 Bushnell et al.
2018/0364815 A1 12/2018 Moussette et al.
2019/0017846 A1 1/2019 Boonsom et al.
2019/0163324 A1 5/2019 Shedletsky
2019/0250754 A1 8/2019 Ely et al.

Masimo Ex. 1025
IPR Petition - US D947,842

(56) **References Cited**

U.S. PATENT DOCUMENTS

2019/0294117	A1	9/2019	Ely et al.
2019/0302902	A1	10/2019	Bushnell et al.

FOREIGN PATENT DOCUMENTS

CN	1445627	10/2003
CN	1504843	6/2004
CN	1624427	6/2005
CN	1792295	6/2006
CN	101035148	9/2007
CN	101201587	6/2008
CN	201081979	7/2008
CN	201262741	6/2009
CN	101750958	6/2010
CN	201638168	11/2010
CN	101923314	12/2010
CN	102216959	10/2011
CN	202008579	10/2011
CN	102890443	1/2013
CN	202710937	1/2013
CN	103191557	7/2013
CN	103253067	8/2013
CN	103645804	3/2014
CN	203564224	4/2014
CN	103852090	6/2014
CN	203630524	6/2014
CN	103956006	7/2014
CN	203693601	7/2014
CN	203732900	7/2014
CN	103995456	8/2014
CN	203941395	11/2014
CN	104777987	4/2015
CN	104685794	6/2015
CN	204479929	7/2015
CN	104880937	9/2015
CN	204650147	9/2015
CN	105096979	11/2015
CN	105547146	5/2016
CN	106236051	12/2016
DE	3706194	9/1988
DE	102008023651	11/2009
DE	102016215087	3/2017
EP	0556155	8/1993
EP	1345095	9/2003
EP	1669724	6/2006
EP	1832969	9/2007
EP	2375295	10/2011
EP	2720129	4/2014
EP	2884239	6/2015
FR	2030093	10/1970
FR	2801402	5/2001
GB	2433211	6/2007
JP	S52151058	12/1977
JP	S54087779	6/1979
JP	S5708582	1/1982
JP	S5734457	2/1982
JP	H02285214	11/1990
JP	H04093719	3/1992
JP	H04157319	5/1992
JP	H05203465	8/1993
JP	H05312595	11/1993
JP	H06050927	12/1994
JP	H06331761	12/1994
JP	H06347293	12/1994
JP	H10161811	6/1998
JP	11121210	4/1999
JP	H11191508	7/1999
JP	2000337892	12/2000
JP	2001084934	3/2001
JP	2001167651	6/2001
JP	2001202178	7/2001
JP	2003050668	2/2003
JP	2003151410	5/2003
JP	2003331693	11/2003
JP	2004184396	7/2004
JP	2005017011	1/2005
JP	2005063200	3/2005
JP	2005108630	4/2005
JP	2006164275	6/2006
JP	2007149620	6/2007
JP	2007248176	9/2007
JP	2007311153	11/2007
JP	2008053980	3/2008
JP	2008122124	5/2008
JP	2008122377	5/2008
JP	2008170436	7/2008
JP	2008235226	10/2008
JP	2009070657	4/2009
JP	2009519737	5/2009
JP	2010032545	2/2010
JP	2010165001	7/2010
JP	2010186572	8/2010
JP	2010243344	10/2010
JP	2010244797	10/2010
JP	2011165468	8/2011
JP	2013057516	3/2013
JP	2013079961	5/2013
JP	2014512556	5/2014
JP	2014174031	9/2014
KR	20010030477	4/2001
KR	20070011685	1/2007
KR	20070014247	2/2007
KR	100754674	9/2007
KR	20080045397	5/2008
KR	2020100007563	7/2010
KR	20110011393	2/2011
KR	20110012784	2/2011
KR	20110113368	10/2011
KR	20160017070	2/2016
NL	1040225	11/2014
RO	129033	11/2013
TW	200633681	10/2006
WO	WO2001/022038	3/2001
WO	WO2001/069567	9/2001
WO	WO2010/058376	5/2010
WO	WO2012/083380	6/2012
WO	WO2012/094805	7/2012
WO	WO2014/018118	1/2014
WO	WO2014/200766	12/2014
WO	WO2015/147756	10/2015
WO	WO2016/104922	6/2016
WO	WO2016/155761	10/2016
WO	WO2016196171	12/2016
WO	WO2017/013278	1/2017

OTHER PUBLICATIONS

Author Unknown, "Fossil Q ups smartwatch game with handsome design and build," Business Mirror, Makati City, Philippines, 3 pages, Dec. 20, 2016.

Author Unknown, "MyKronoz ZeTime: World's Most Funded Hybrid Smartwatch Raised over $3M on Kickstarter, Running until Apr. 27th," Business Wire, New York, New York, 3 pages, Apr. 21, 2017.

U.S. Appl. No. 15/627,321, filed Jun. 1, 2017, pending.

U.S. Appl. No. 15/870,718, filed Jan. 12, 2018, pending.

U.S. Appl. No. 15/879,223, filed Jan. 24, 2018, pending.

GreyB, "Google Watch: Convert your arm into a keyboard," http://www.whatafuture.com/2014/02/28/google-smartwatch/#sthash.Yk35cDXK.dpbs, 3 pages, Feb. 28, 2014.

Invitation to Pay Additional Fees, PCT/US2015/047958, 8 pages, dated Dec. 2, 2015.

Author Unknown, "How Vesag Helps Kids Women and Visitors," http://www.sooperarticles.com/health-fitness-articles/children-health-articles/how-vesag-helps-kids-women-visitors-218542.html, 2 pages, at least as early as May 20, 2015.

Author Unknown, "mHealth," http://mhealth.vesag.com/?m=201012, 7 pages, Dec. 23, 2010.

Author Unknown, "mHealth Summit 2010," http://www.virtualpressoffice.com/eventsSubmenu.do?page=exhibitorPage&showId=1551&companyId=5394, 5 pages, Nov. 18, 2010.

Masimo Ex. 1025
IPR Petition - US D947,842

(56) **References Cited**

OTHER PUBLICATIONS

Author Unknown, "RedEye mini Plug-in Universal Remote Adapter for iPhone, iPod touch and iPad," Amazon.com, 4 pages, date unknown.
Author Unknown, "Re iPhone Universal Remote Control—Infrared Remote Control Accessory for iPhone and iPod touch," http://www.amazon.com/iPhone-Universal-Remote-Control-Accessory/dp/tech-data/B0038Z4 . . . , 2 pages, at least as early as Jul. 15, 2010.
Author Unknown, "Vesag Wrist Watch for Dementia Care from VYZIN," http://vyasa-kaaranam-ketkadey.blogspot.com/2011/03/vesag-wrist-watch-for-dementia-care.html, 2 pages, Mar. 31, 2011.
Author Unknown, "Vyzin Electronics Private Limited launches Vesag Watch," http://www.virtualpressoffice.com/showJointPage.do?page=jp&showId=1544, 5 pages, Jan. 6, 2011.
Author Unknown, "Vyzin Unveiled Personal Emergency Response System (PERS) with Remote Health Monitoring That Can Be Used for Entire Family," http://www.24-7pressrelease.com/press-release/vyzin-unveiled-personal-emergency-response-system-pers-with-remote-health-monitoring-that-can-be-used-for-entire-family-219317.php, 2 pages, Jun. 17, 2011.
Author Unknown, "DeskThorityNet, Optical Switch Keyboards," http://deskthority.net/keyboards-f2/optical-switch-keyboards-t1474.html, 22 pages, Jul. 11, 2015.
Epstein et al., "Economical, High-Performance Optical Encoders," Hewlett-Packard Journal, pp. 99-106, Oct. 1988. [text only version].
IBM, "Additional Functionality Added to Cell Phone via "Learning" Function Button," www.ip.com, 2 pages, Feb. 21, 2007.
Kim, Joseph, "2010 mHealth Summit Emerges as Major One-Stop U.S. Venue for Mobile Health," http://www.medicineandtechnology.com/2010/08/2010-mhealth-summit-emerges-as-major.html, 3 pages, Aug. 26, 2010.
Krishnan et al., "A Miniature Surface Mount Reflective Optical Shaft Encoder," Hewlett-Packard Journal, Article 8, pp. 1-6, Dec. 1996.
Rick, "How VESAG Helps Health Conscious Citizens," http://sensetekgroup.com/2010/11/29/wireless-health-monitoring-system/, 2 pages, Nov. 29, 2010.
Sadhu, Rajendra, "How VESAG Helps People Who Want to 'Be There'?," http://ezinearticles.com/?How-Vesag-Helps-People-Who-Want-to-Be-There?&id-5423873, 1 page, Nov. 22, 2010.
Sadhu, Rajendra, "Mobile Innovation Helps Dementia and Alzheimer's Patients," http://www.itnewsafrica.com/2010/11/mobile-innovation-helps-dementia-andalzheimer%E2%80%99s-patients/, 3 pages, Nov. 22, 2010.
Sherr, Sol, "Input Devices," p. 55, Mar. 1988.
Tran et al., "Universal Programmable Remote Control/Telephone," www.ip.com, 2 pages, May 1, 1992.
U.S. Appl. No. 15/055,554, filed Feb. 27, 2016, pending.
U.S. Appl. No. 15/210,917, filed Jul. 15, 2016, pending.
U.S. Appl. No. 15/219,253 filed Jul. 25, 2016, pending.
U.S. Appl. No. 15/465,523, filed Mar. 21, 2017, pending.
U.S. Appl. No. 16/022,563, filed Jun. 28, 2018, pending.
U.S. Appl. No. 16/033,491, filed Jul. 12, 2018, pending.
U.S. Appl. No. 16/048,081, filed Jul. 27, 2018, pending.
U.S. Appl. No. 15/960,487, filed Apr. 23, 2018, pending.
U.S. Appl. No. 15/969,630, filed May 2, 2018, pending.
U.S. Appl. No. 16/010,502, filed Jun. 17, 2018, pending.
U.S. Appl. No. 16/221,549, filed Dec. 16, 2018, pending.
U.S. Appl. No. 16/247,335, filed Jan. 14, 2019, pending.
U.S. Appl. No. 16/255,685, filed Jan. 23, 2019, pending.

* cited by examiner

Masimo Ex. 1025
IPR Petition - US D947,842

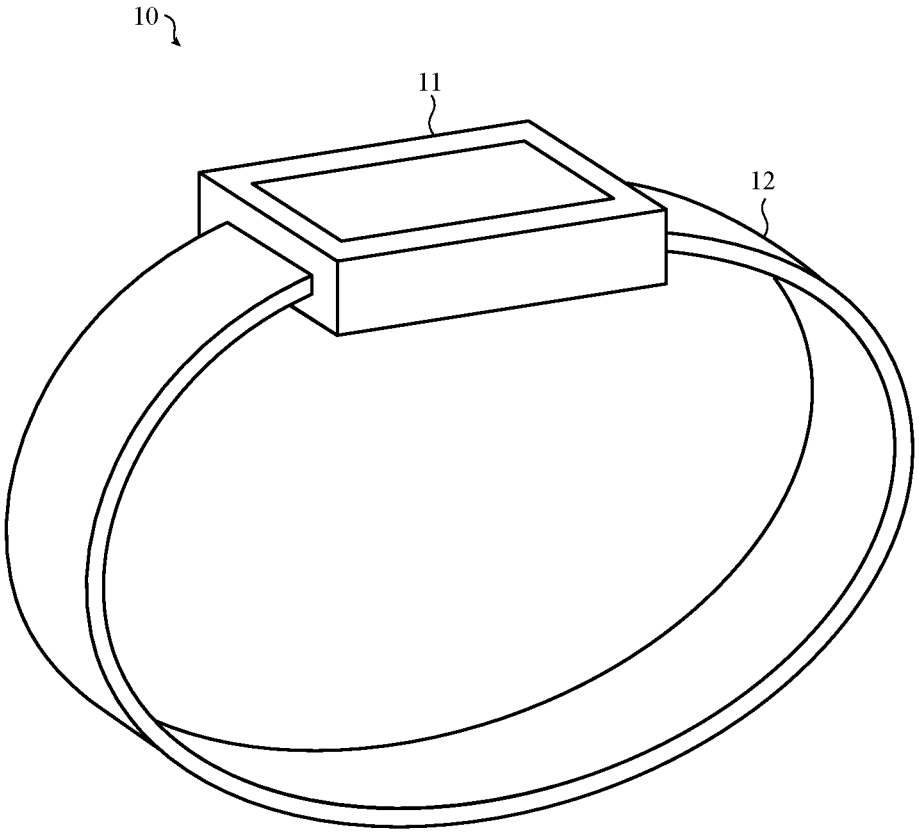

FIG. 1

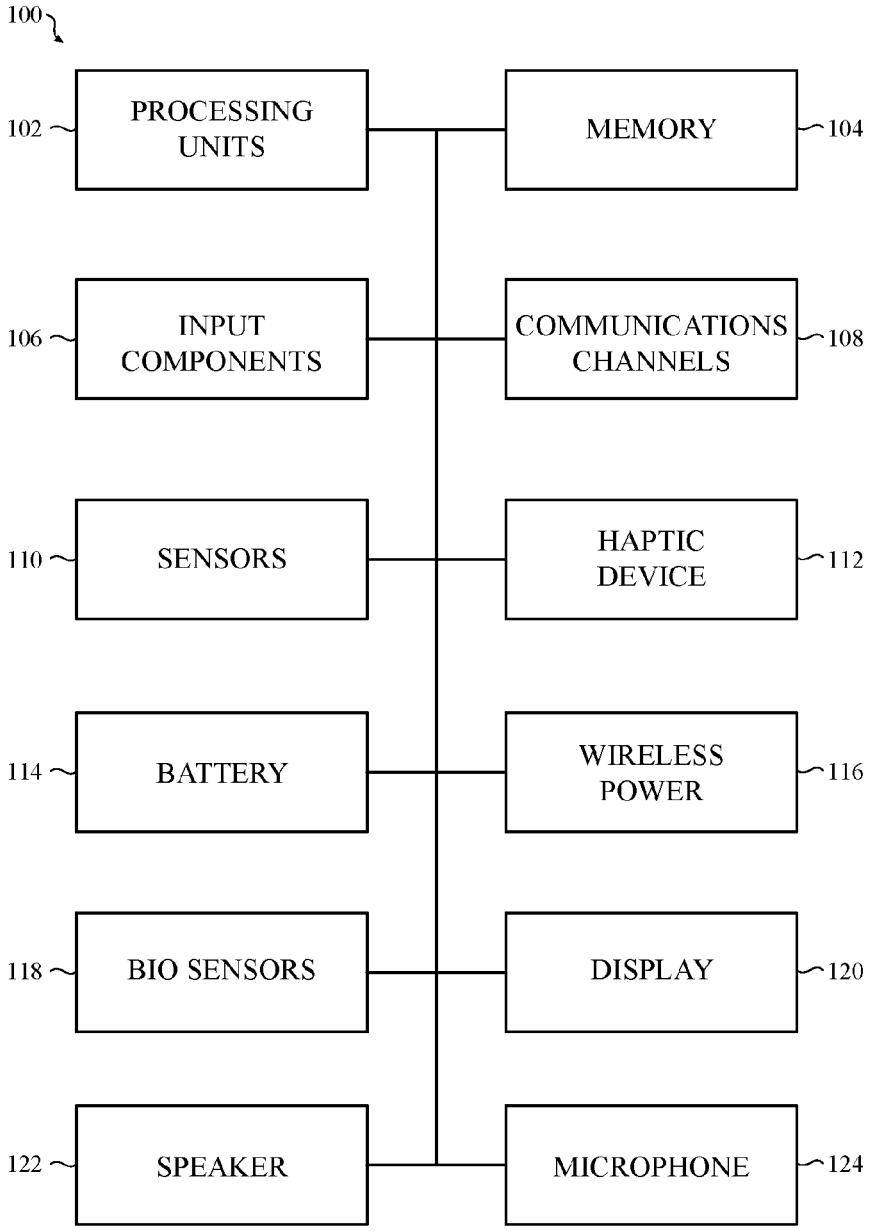

FIG. 2

Masimo Ex. 1025
IPR Petition - US D947,842

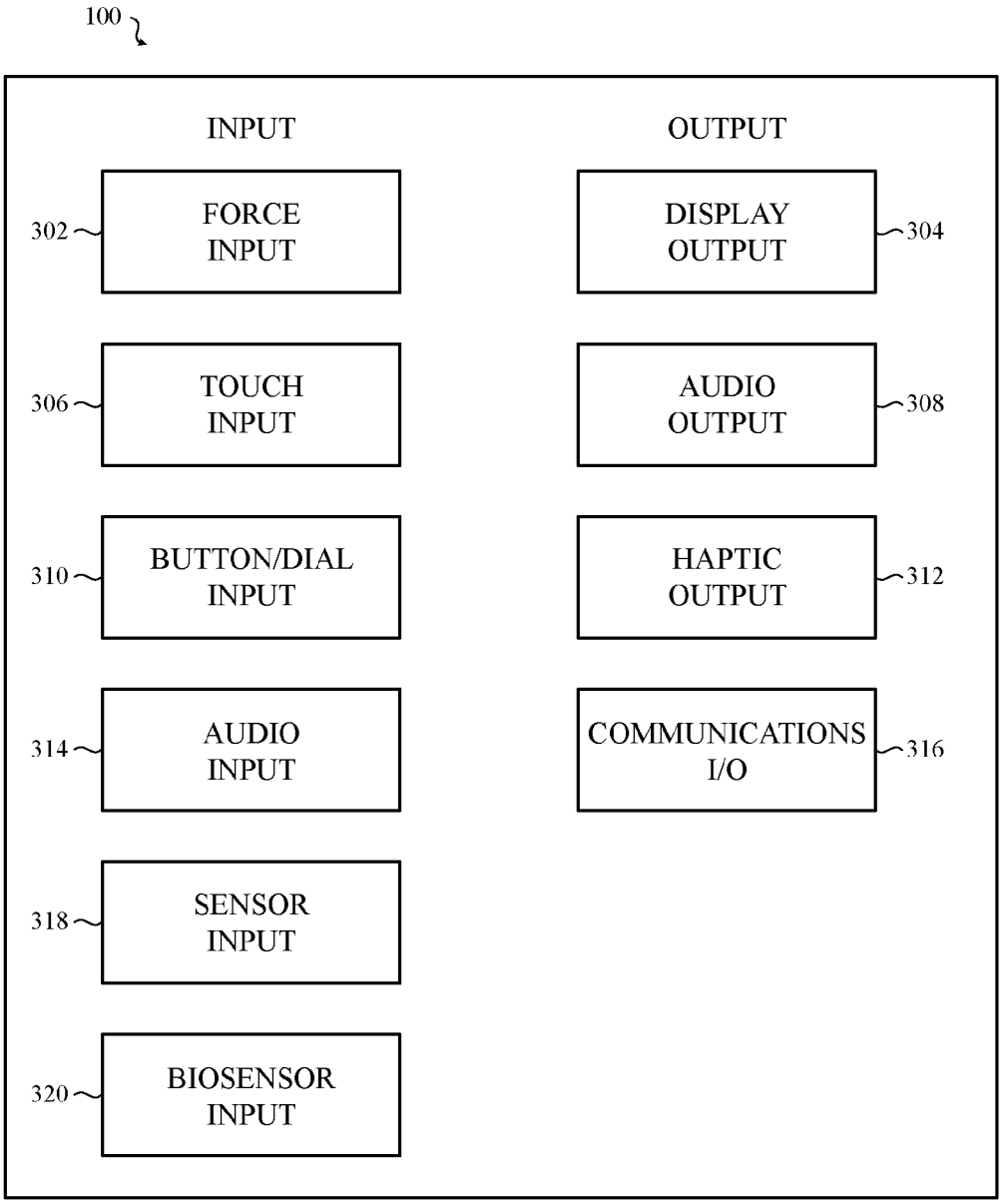

FIG. 3

Masimo Ex. 1025
IPR Petition - US D947,842

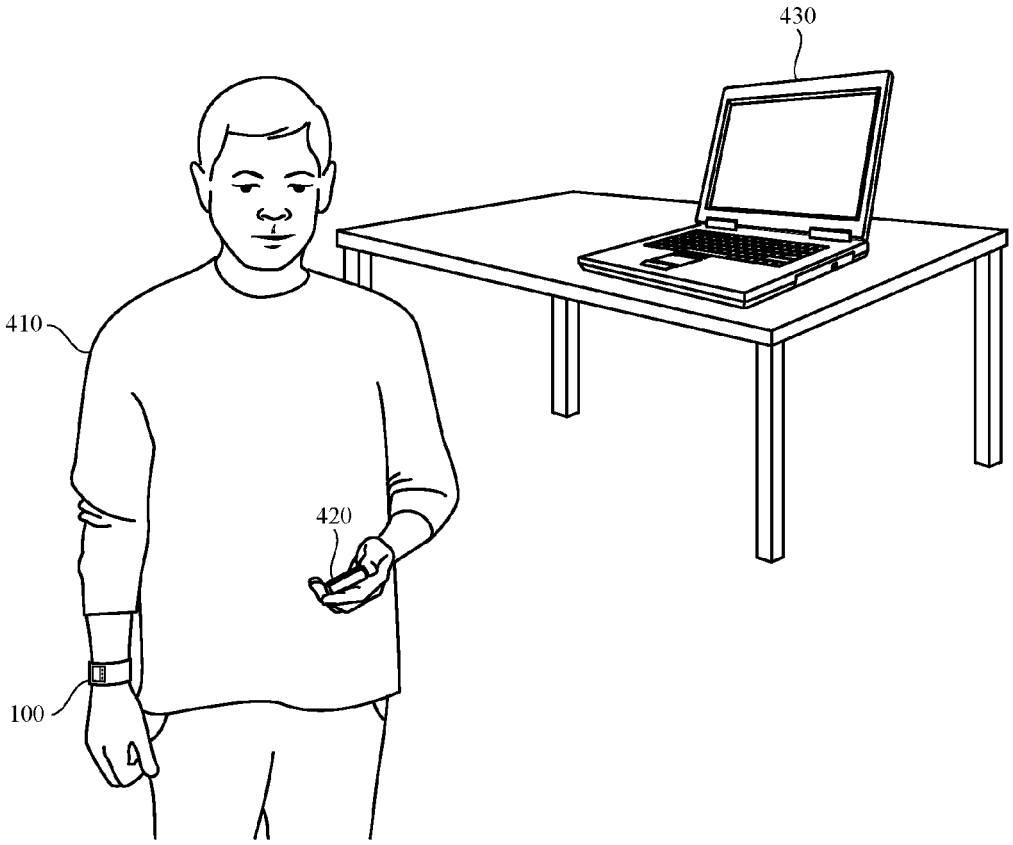

FIG. 4

Masimo Ex. 1025
IPR Petition - US D947,842

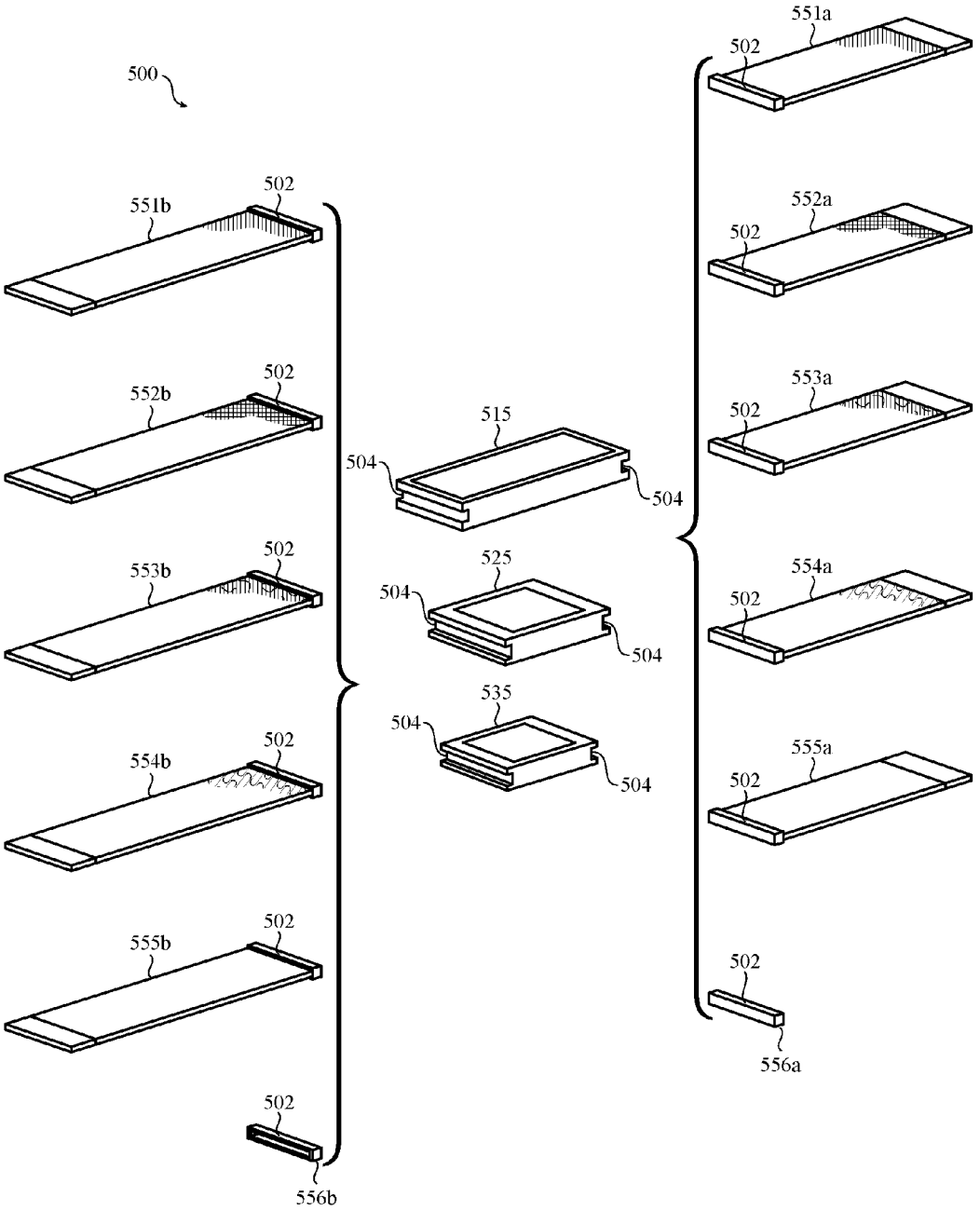

FIG. 5

Masimo Ex. 1025
IPR Petition - US D947,842

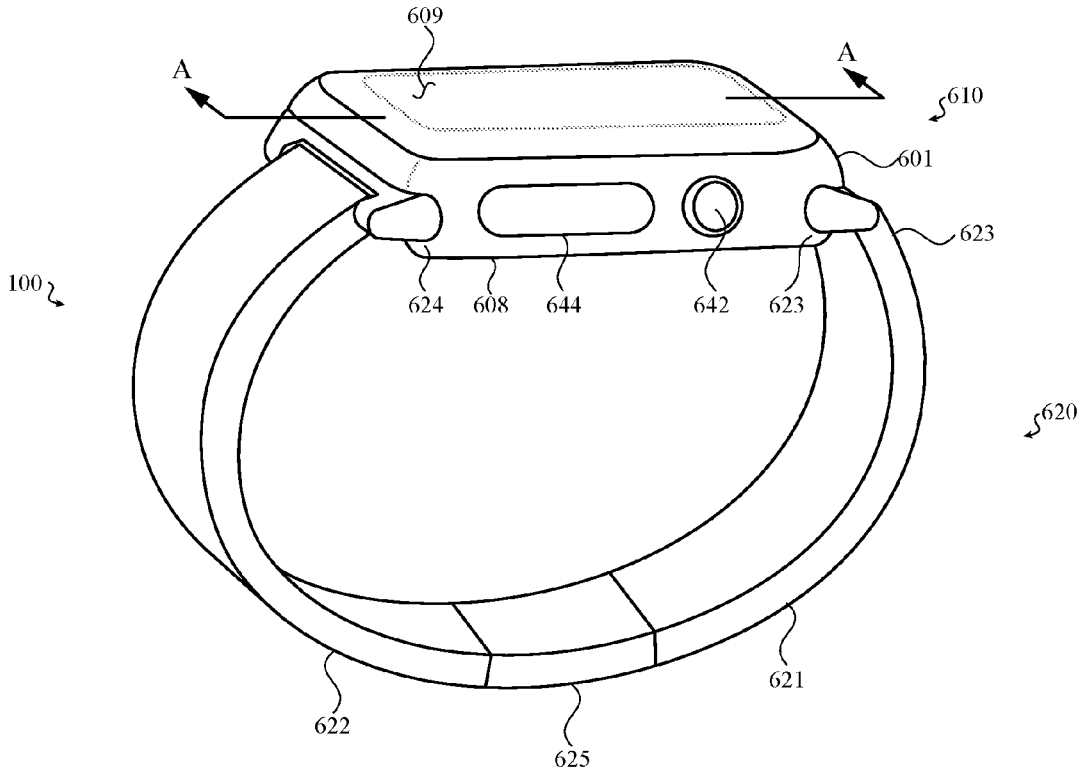

FIG. 6

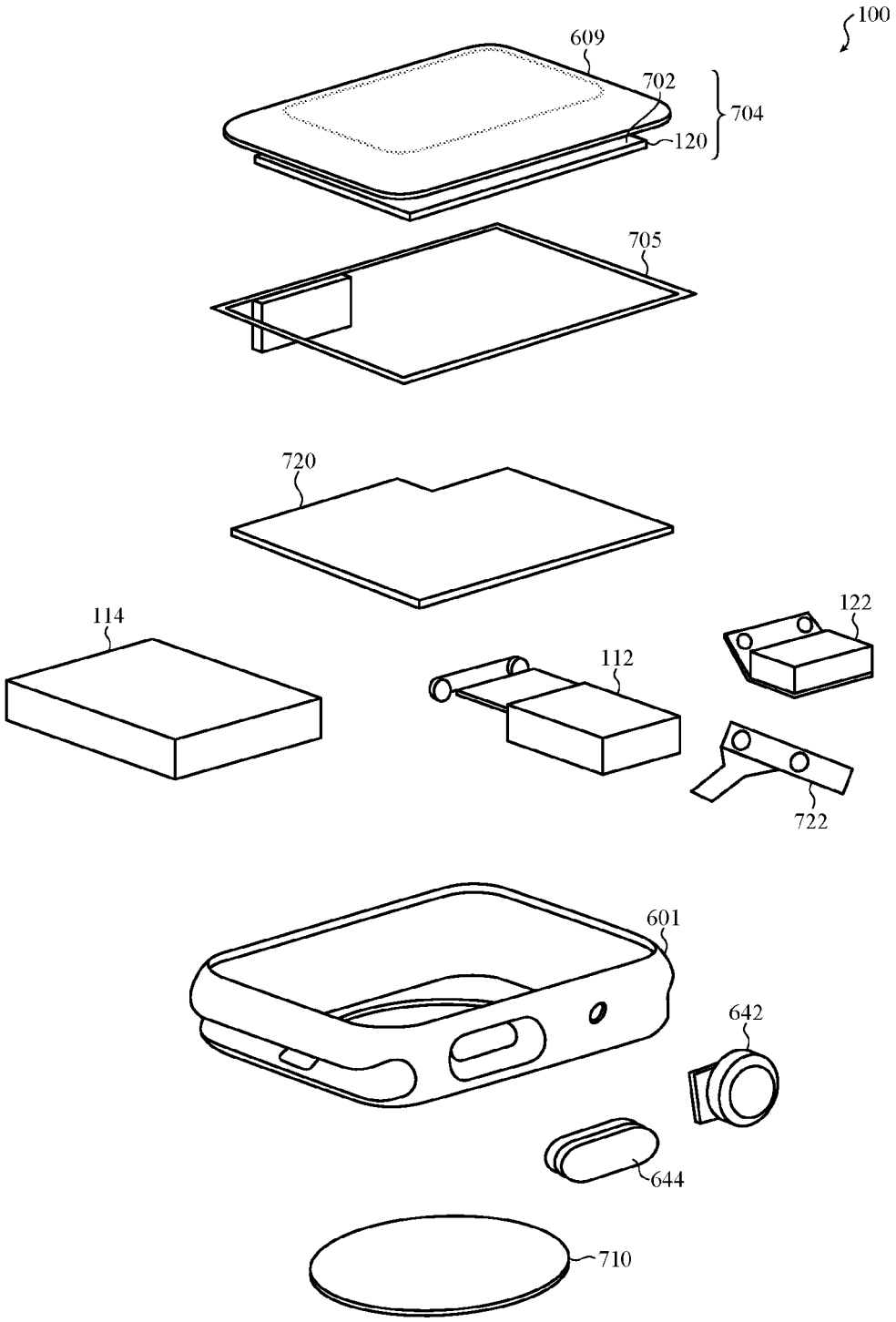

FIG. 7

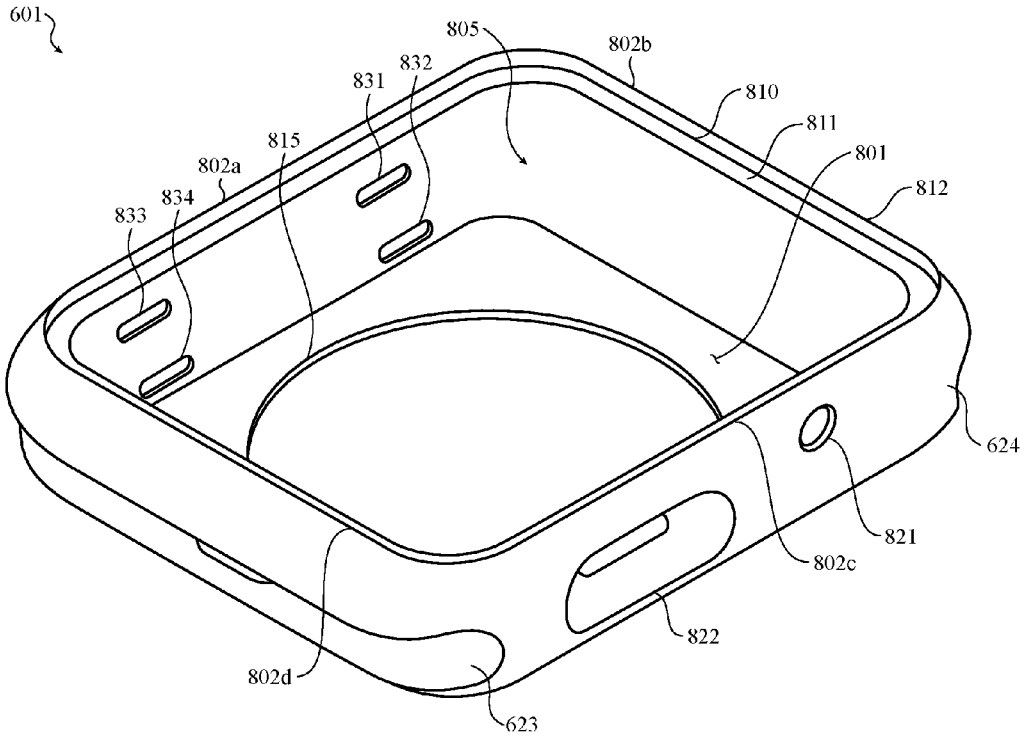

FIG. 8

Masimo Ex. 1025
IPR Petition - US D947,842

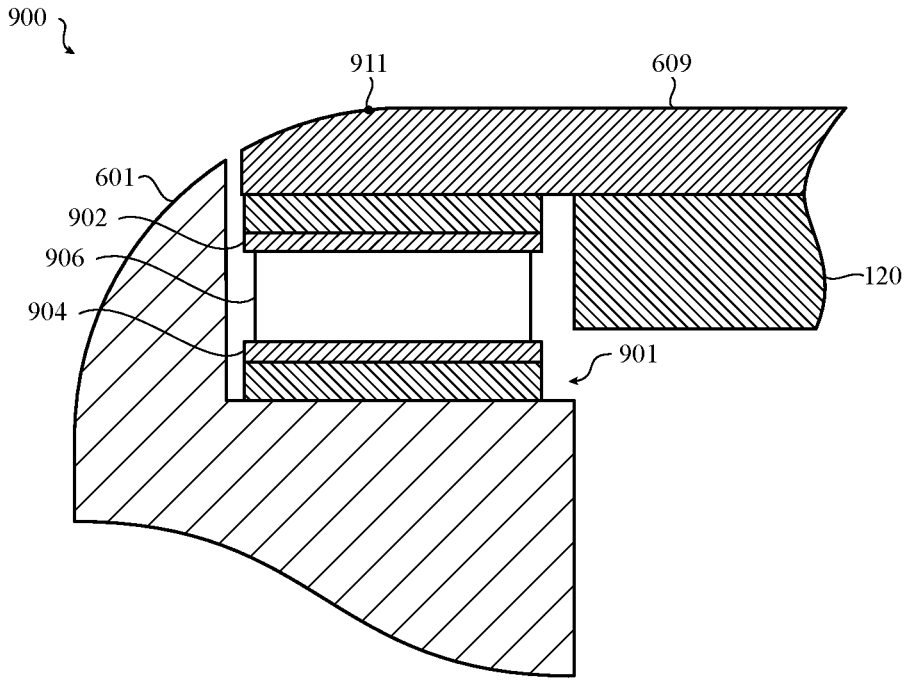

FIG. 9

Masimo Ex. 1025
IPR Petition - US D947,842

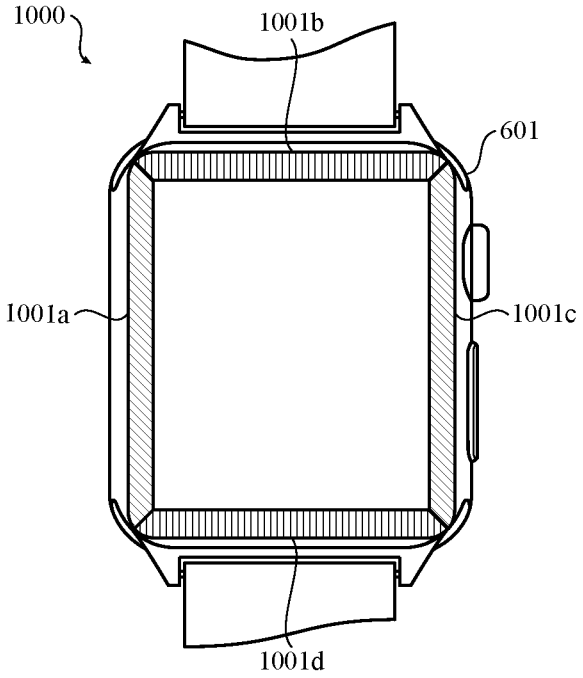

FIG. 10A

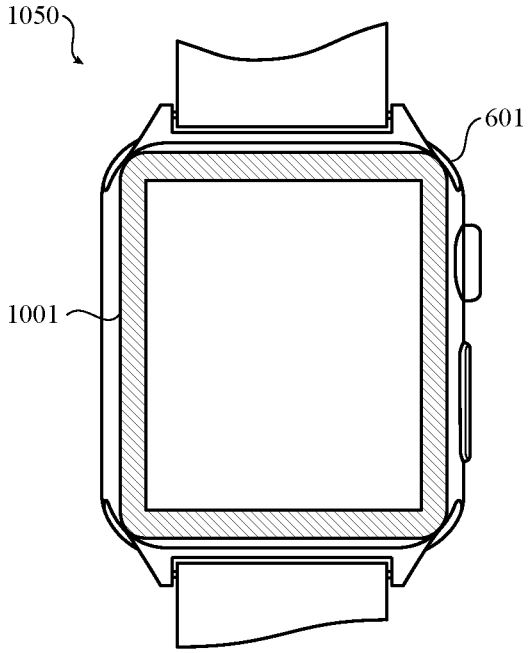

FIG. 10B

Masimo Ex. 1025
IPR Petition - US D947,842

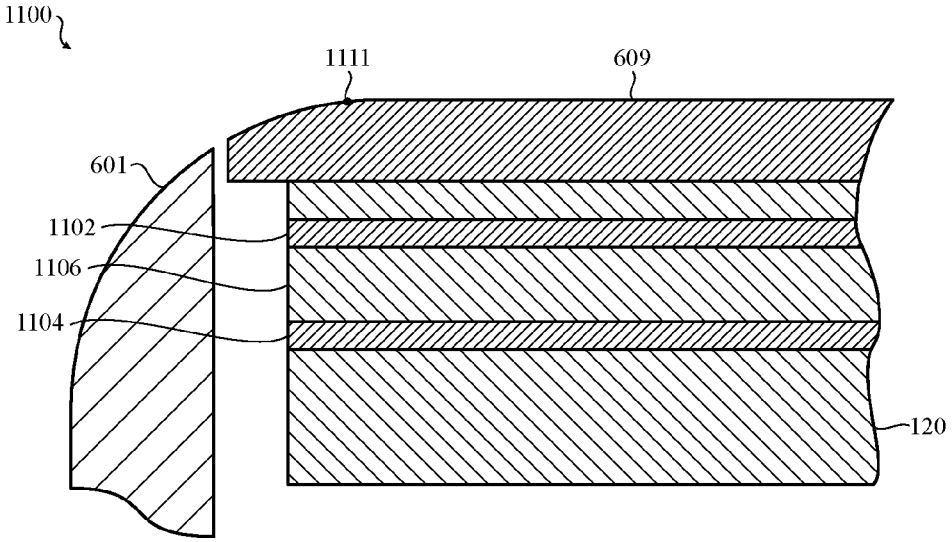

FIG. 11

Masimo Ex. 1025
IPR Petition - US D947,842

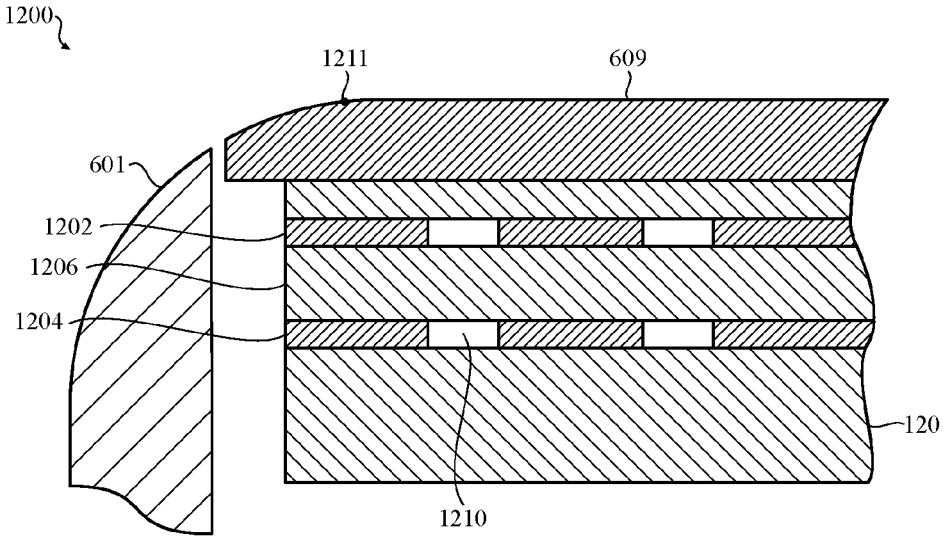

FIG. 12

Masimo Ex. 1025
IPR Petition - US D947,842

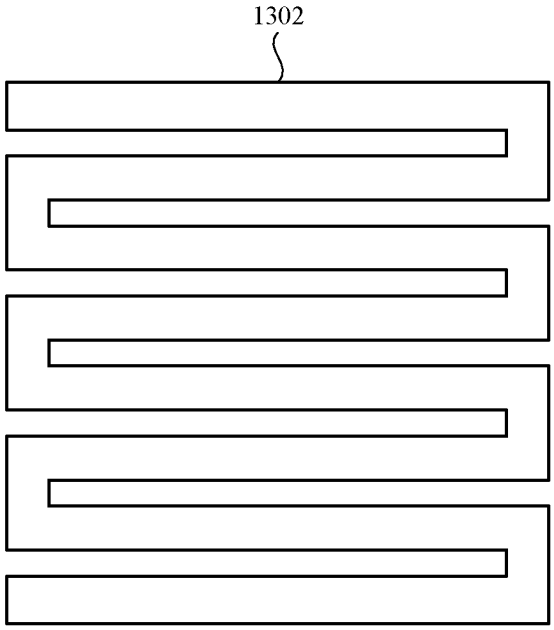

FIG. 13A

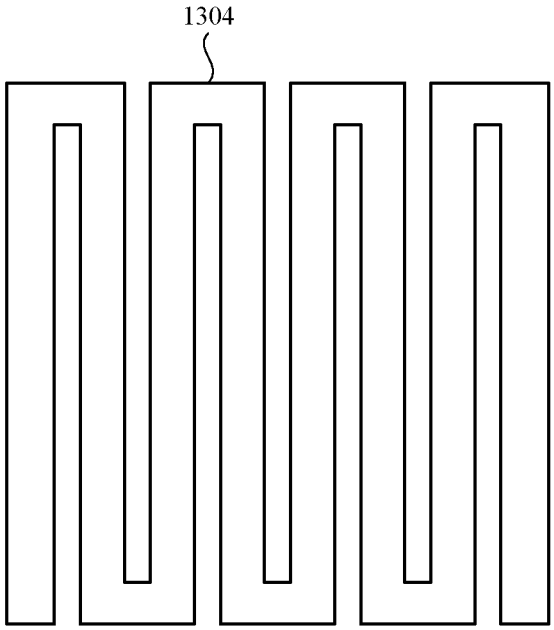

FIG. 13B

Masimo Ex. 1025
IPR Petition - US D947,842

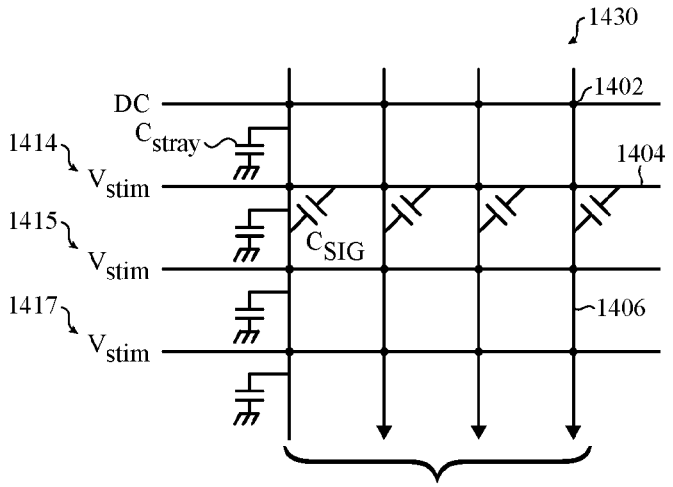

FIG. 14A

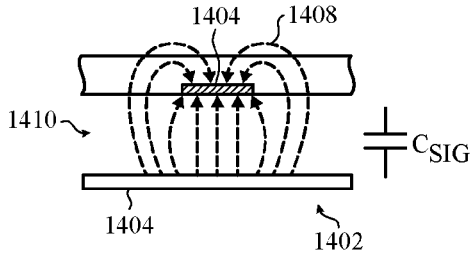

FIG. 14B

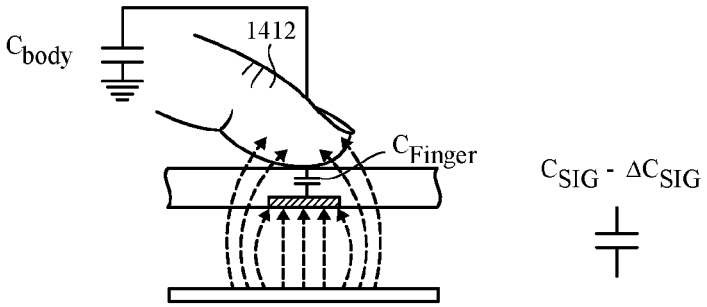

FIG. 14C

Masimo Ex. 1025
IPR Petition - US D947,842

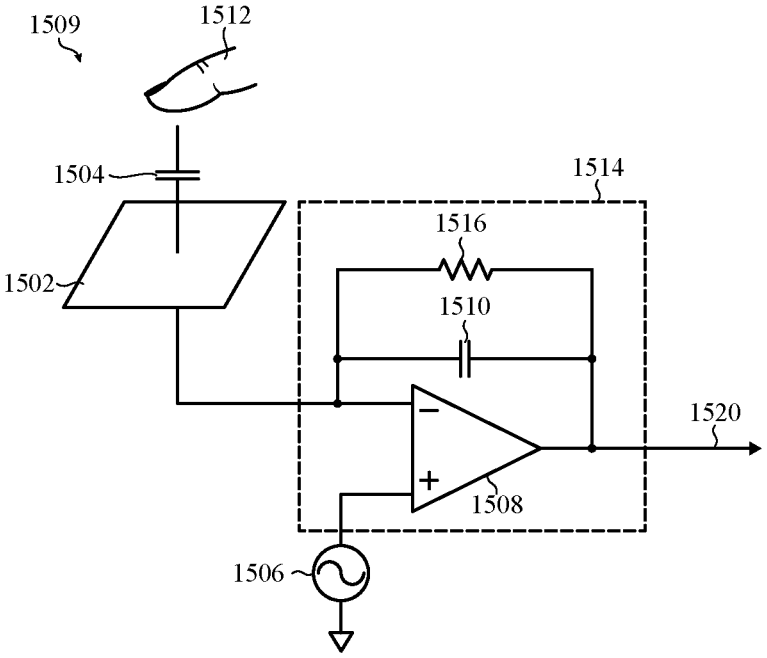

FIG. 15A

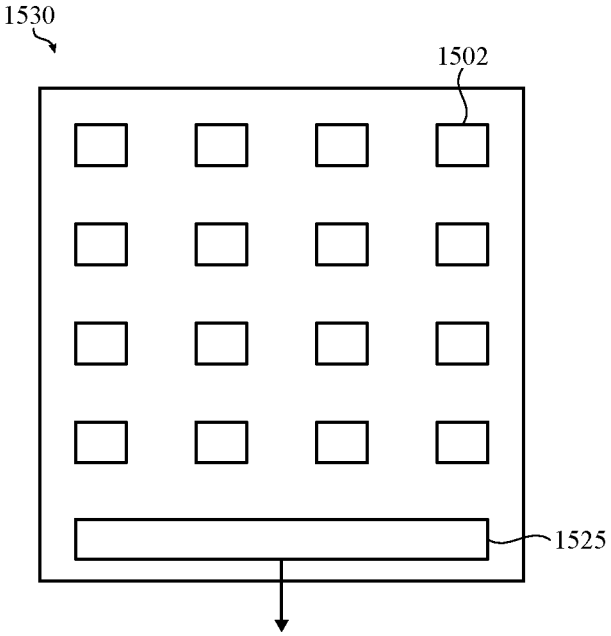

FIG. 15B

Masimo Ex. 1025
IPR Petition - US D947,842

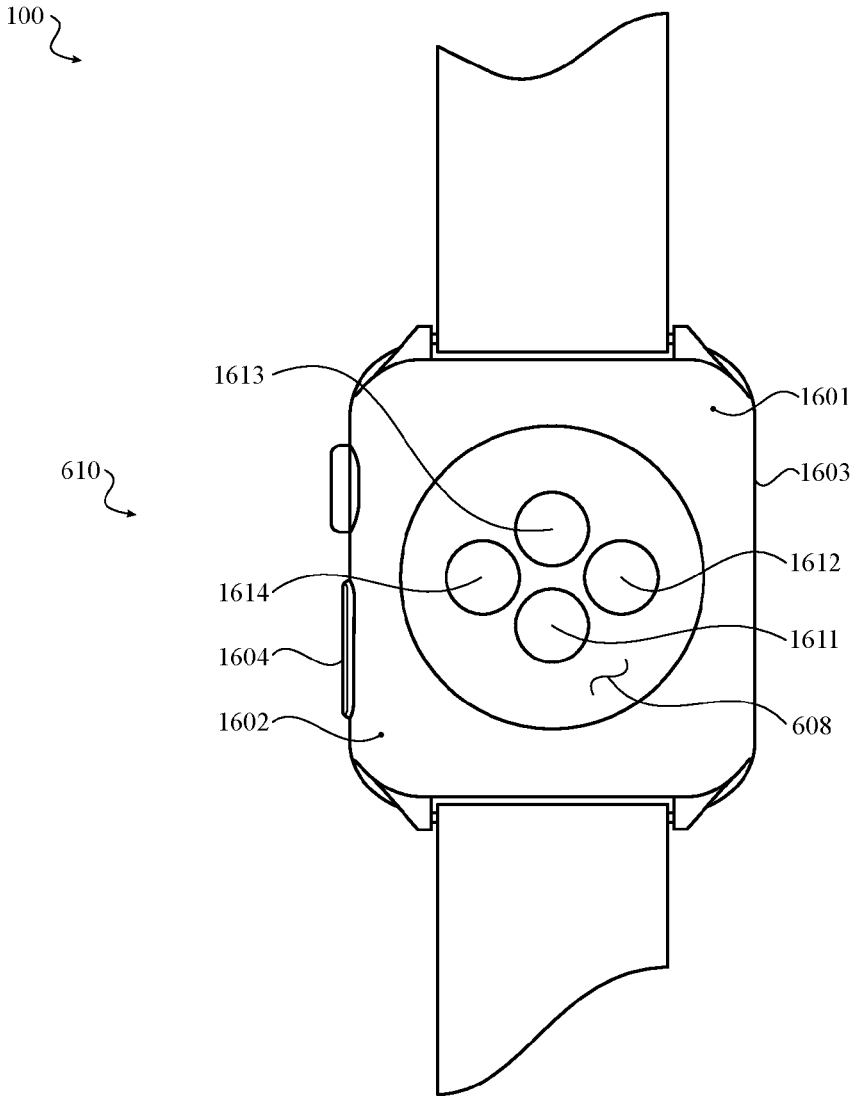

FIG. 16

Masimo Ex. 1025
IPR Petition - US D947,842

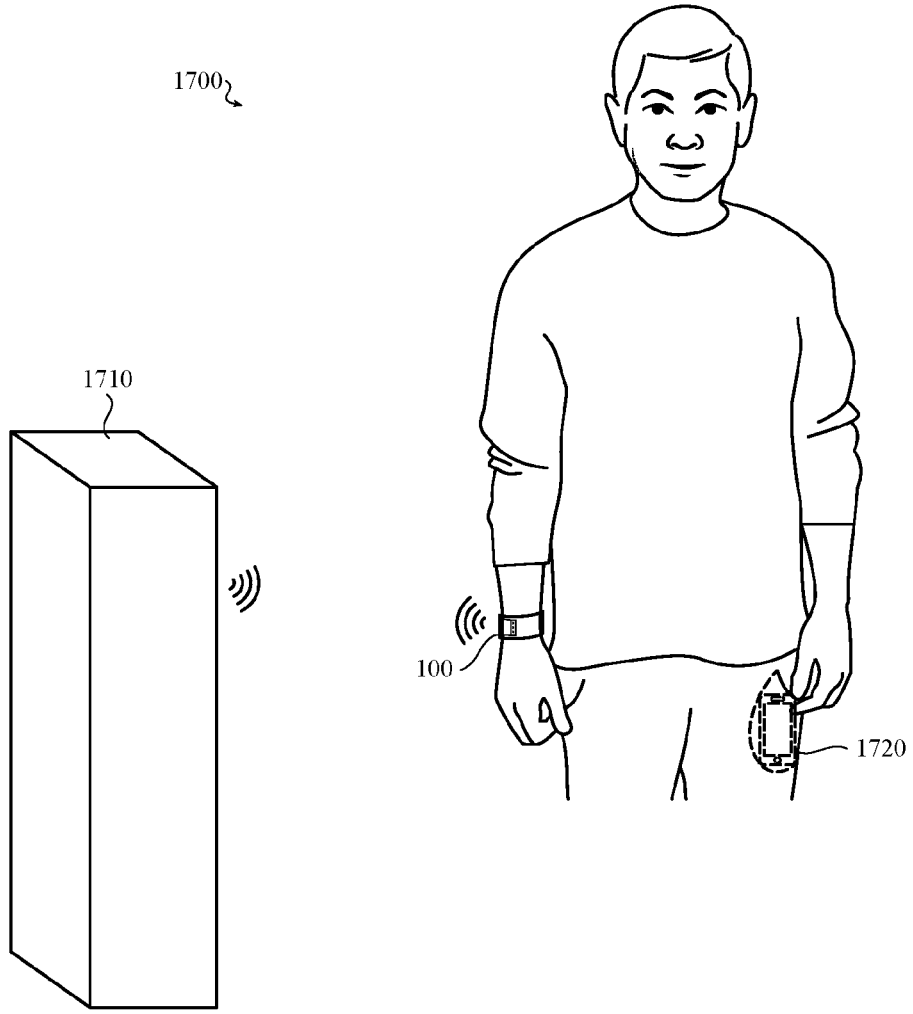

FIG. 17

Masimo Ex. 1025
IPR Petition - US D947,842

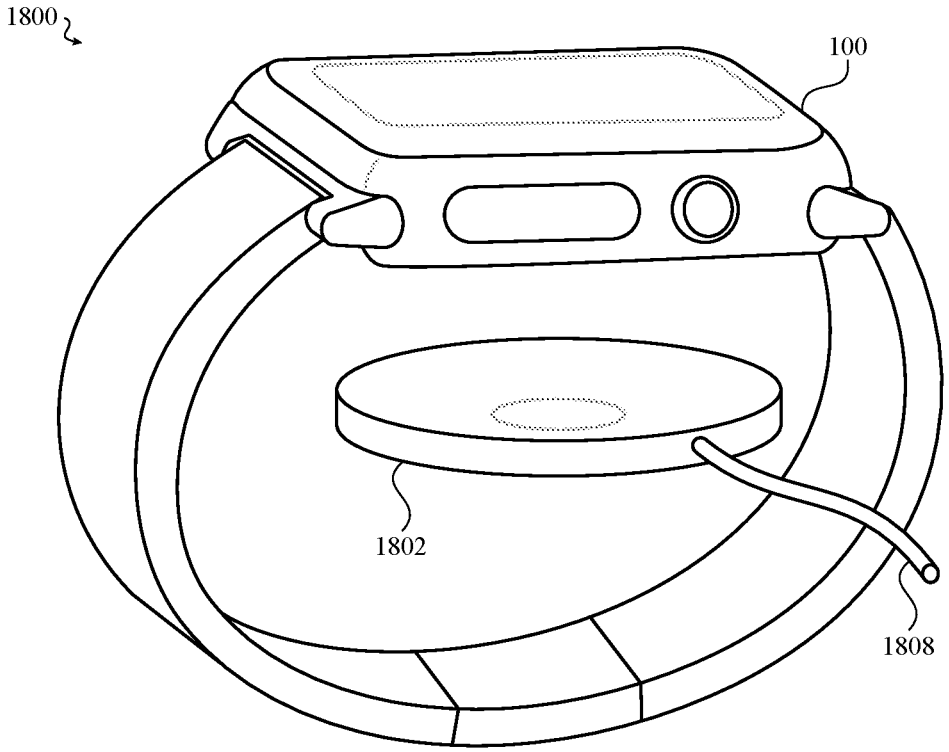

FIG. 18

Masimo Ex. 1025
IPR Petition - US D947,842

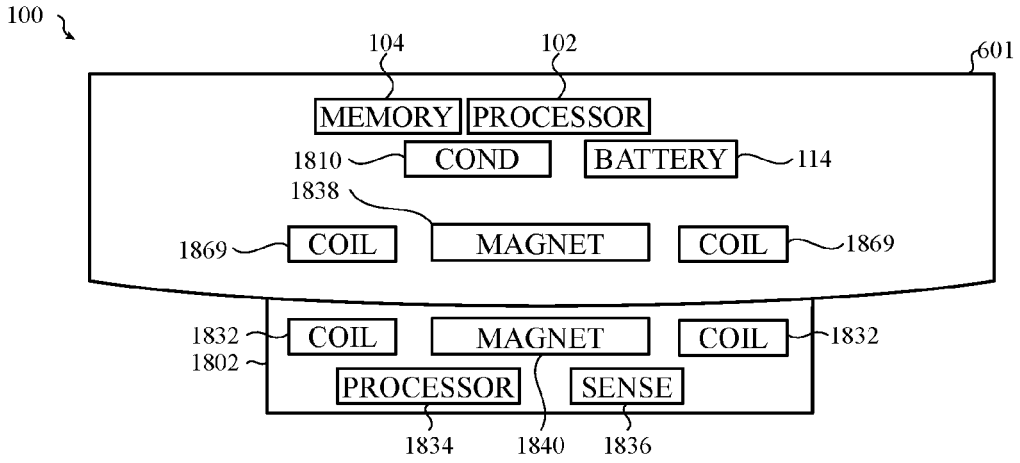
100
104
102
601
MEMORY
PROCESSOR
1810
COND
BATTERY
114
1838
1869
COIL
MAGNET
COIL
1869
1832
COIL
MAGNET
COIL
1832
1802
PROCESSOR
SENSE
1834
1840
1836

FIG. 19

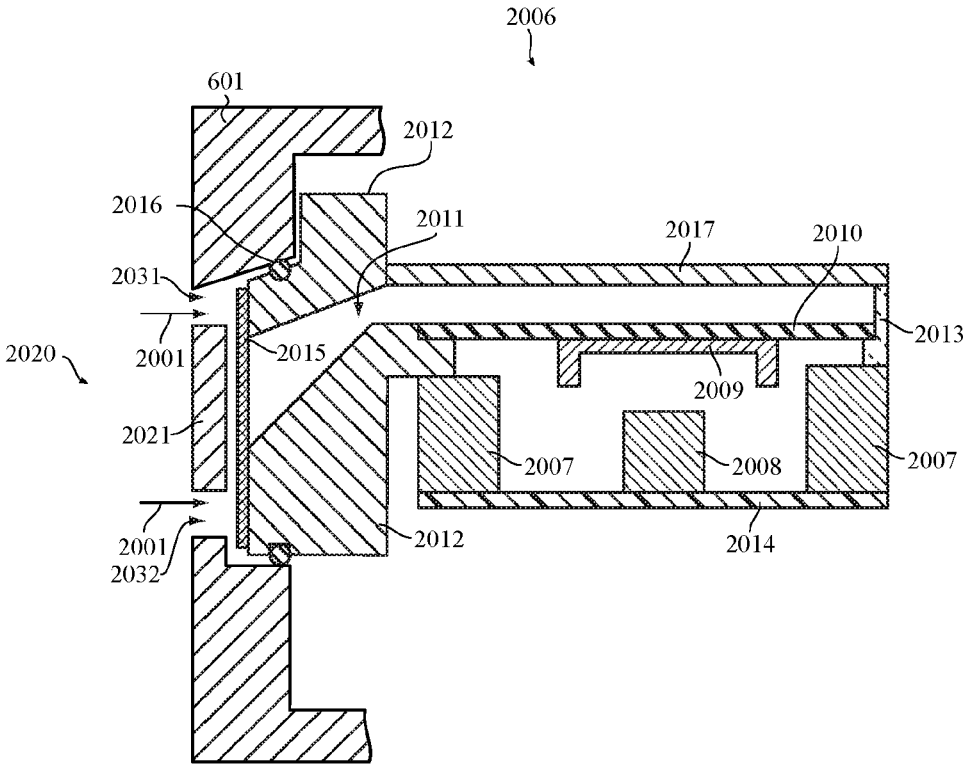

FIG. 20

Masimo Ex. 1025
IPR Petition - US D947,842

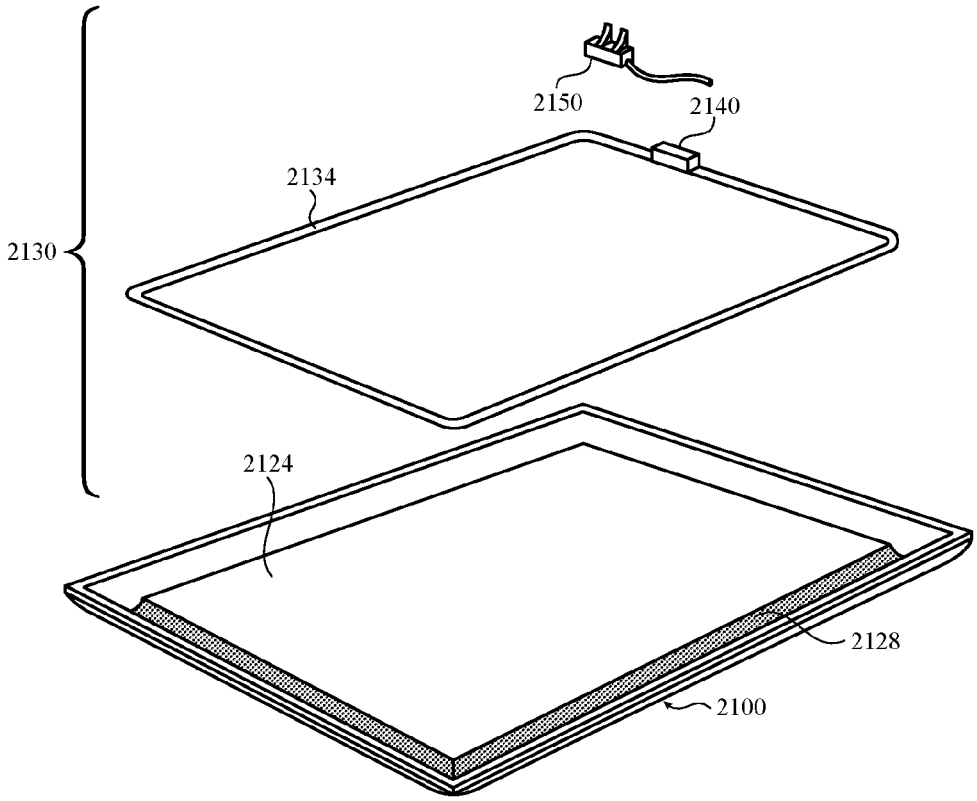

FIG. 21A

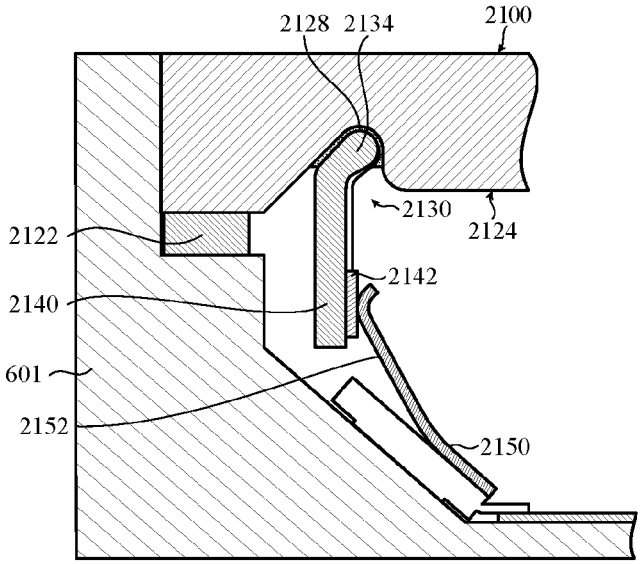

FIG. 21B

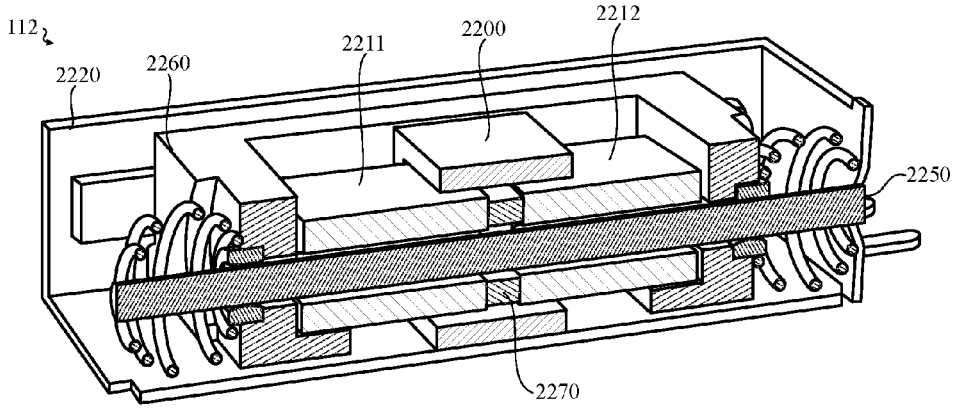

FIG. 22A

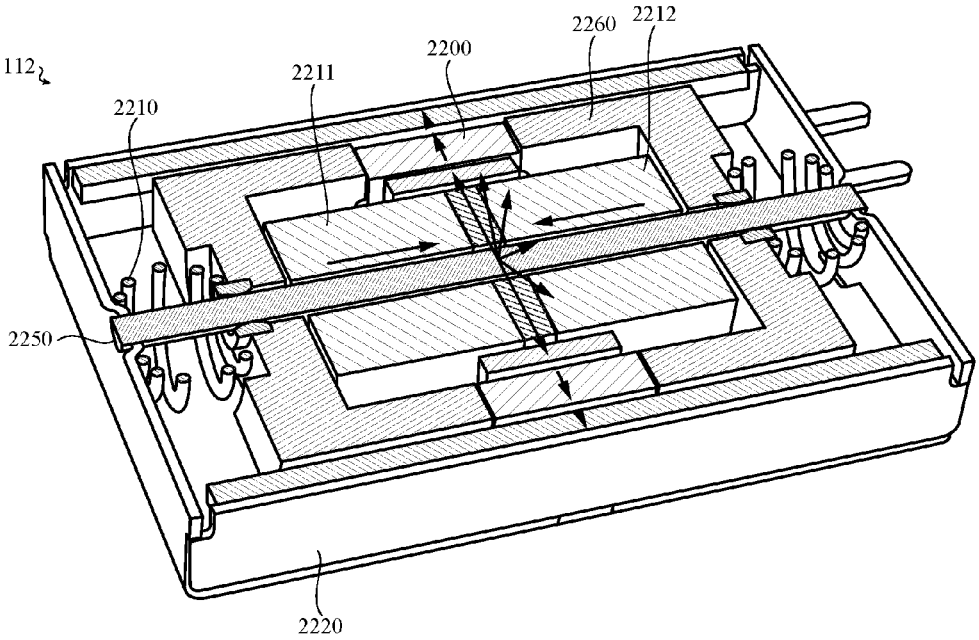

FIG. 22B

Masimo Ex. 1025
IPR Petition - US D947,842

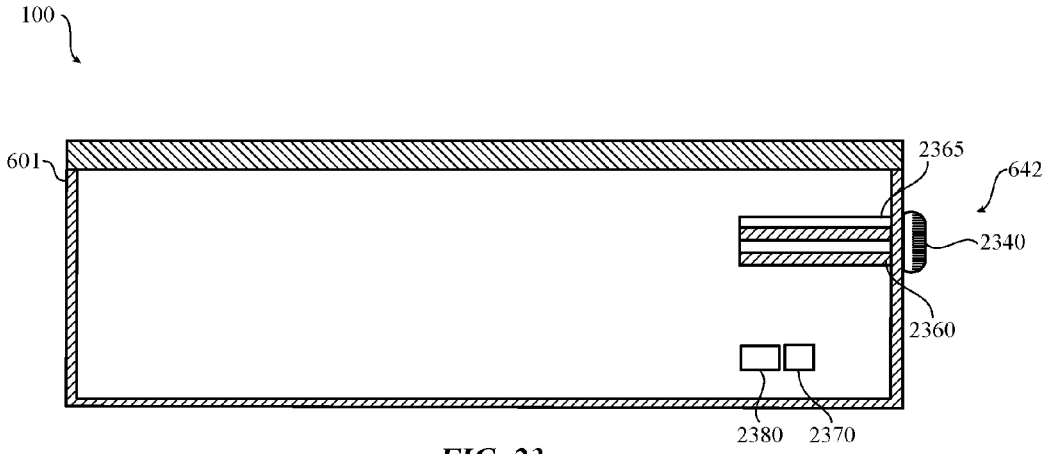

FIG. 23

Masimo Ex. 1025
IPR Petition - US D947,842

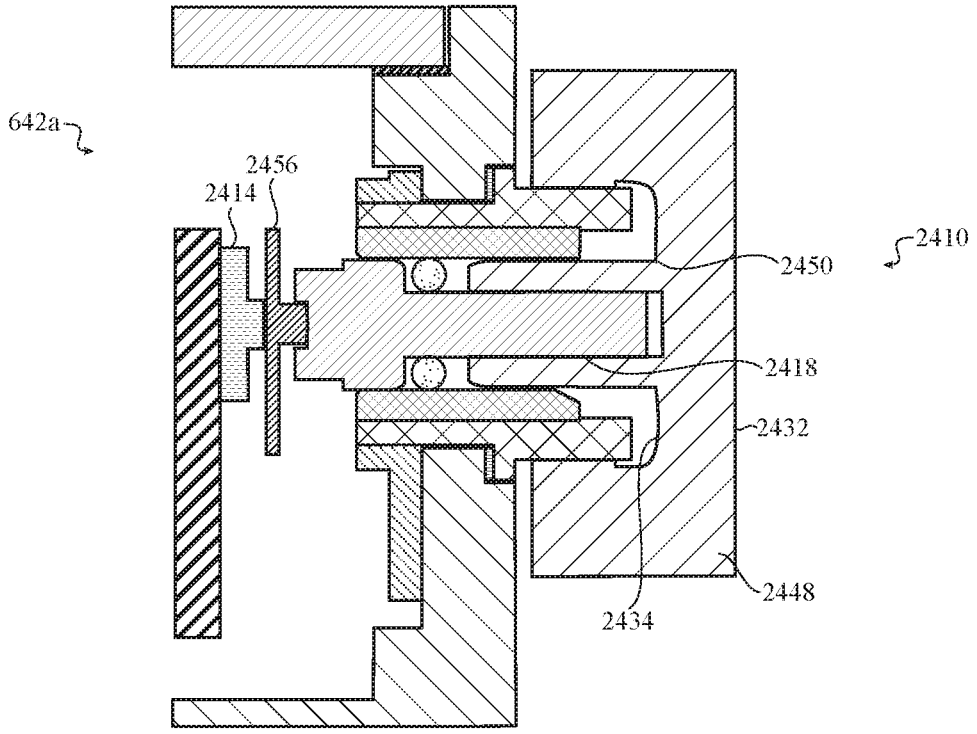

FIG. 24A

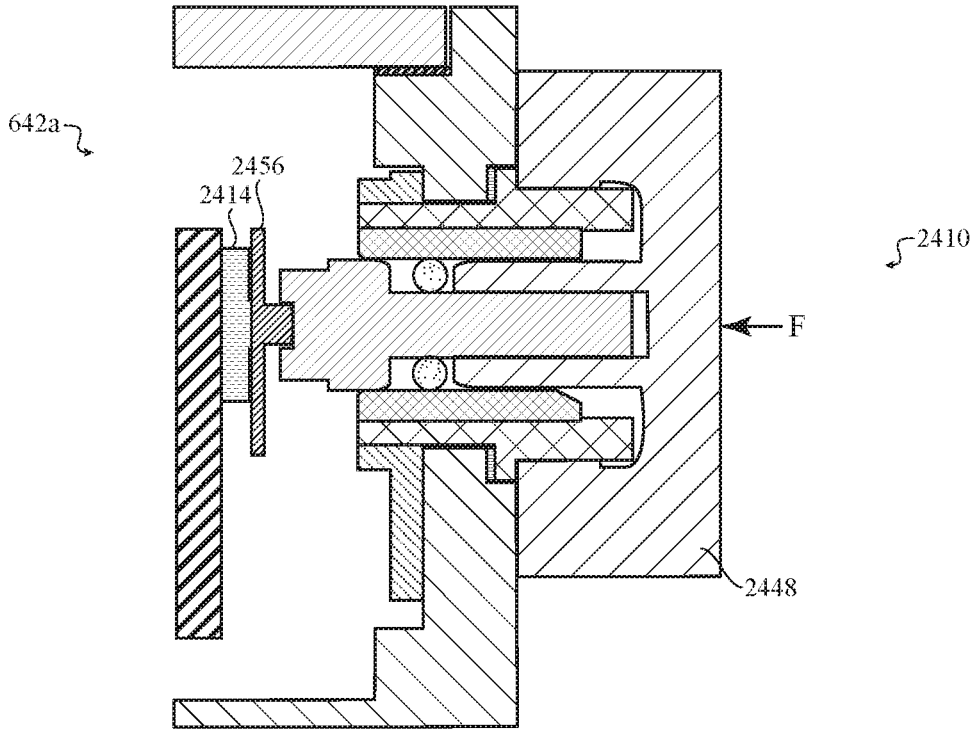

FIG. 24B

Masimo Ex. 1025
IPR Petition - US D947,842

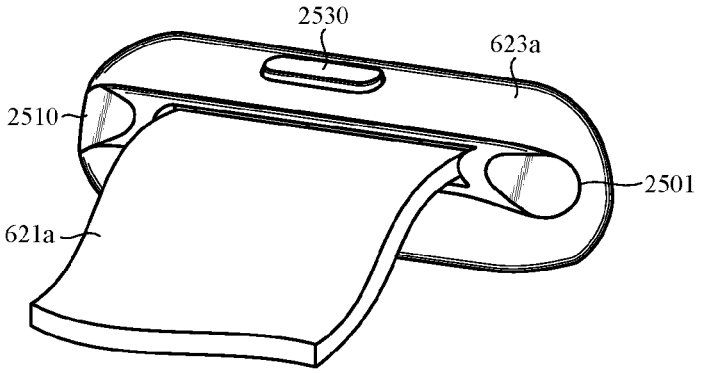

FIG. 25A

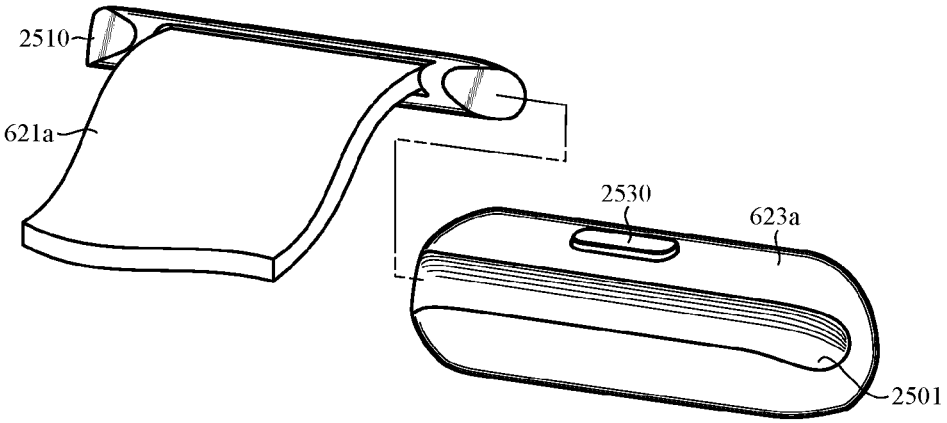

FIG. 25B

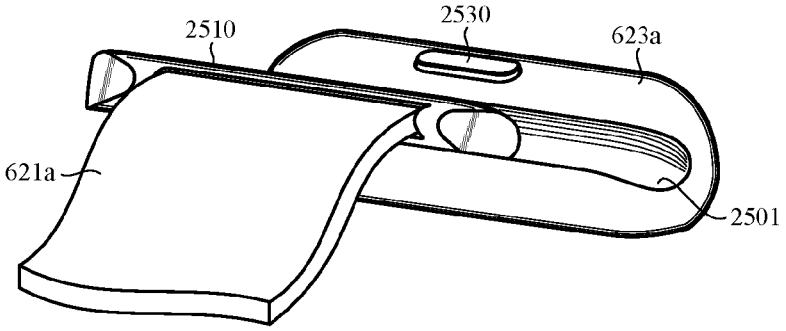

FIG. 25C

Masimo Ex. 1025
IPR Petition - US D947,842

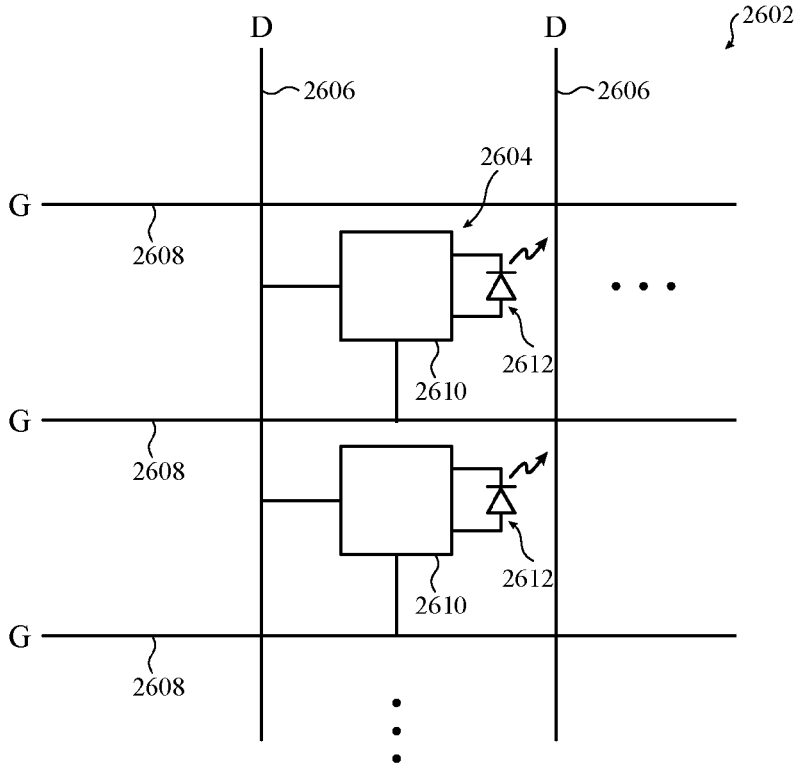

FIG. 26

Masimo Ex. 1025
IPR Petition - US D947,842

WEARABLE ELECTRONIC DEVICE

CROSS-REFERENCE TO RELATED APPLICATION

This application is a continuation patent application of U.S. patent application Ser. No. 14/842,617, filed Sep. 1, 2015 and titled "Wearable Electronic Device," which is a nonprovisional patent application of and claims the benefit of U.S. Provisional Patent Application No. 62/044,974, filed Sep. 2, 2014 and titled "Wearable Electronic Device and Associated Methods of Use and Manufacture," the disclosures of which are hereby incorporated herein by reference in their entireties.

FIELD

The following disclosure generally relates to an electronic device, and more specifically to a wearable electronic device having a range of features, including touch input, force input, an interchangeable attachment system, health monitoring functionality, wireless power charging, wireless authentication and transaction functionality, and other features and functionality.

BACKGROUND

Portable electronic devices have become increasingly popular, and the features and functionality provided by portable electronic devices continue to expand to meet the needs and expectations of many consumers. However, some traditional portable electronic devices, particularly wearable electronic devices, may have relatively limited functionality or are only able to perform a specialized set of functions or tasks. For example, some traditional electronic wristwatches may be configured to perform a relatively limited set of functions, including displaying time, date, and performing basic timing functions. The embodiments described herein are directed to a wearable electronic device that provides a wide range of functionality, as compared to some traditional wearable electronic devices.

SUMMARY

The embodiments included herein are directed to a consumer product, which may include a portable or wearable electronic device that is configured to provide an expansive feature set integrated or incorporated into a compact form factor. In some aspects of the present disclosure, a consumer product may integrate or combine multiple subsystems into a single device to provide a wide range of functionality, including biometric sensing, touch-based user input, near-field communications, and other desirable features. In some aspects, multiple subsystems are integrated into the relatively compact space of a wrist-worn device.

Some example embodiments are directed to wearable electronic device having a housing that includes a flat bottom portion, a top portion defining a cavity, and a curved side portion that extends from the bottom portion to the top portion. A band may be attached to the housing and configured to secure the wearable electronic device to a user. A display may be at least partially disposed within the cavity and may have a viewable area. The device may also include a cover disposed above the display and including a flat middle portion larger than the viewable area of the display, a curved edge portion surrounding the flat middle portion and coinciding with the curved side portion along a perimeter of the cavity to form a continuous contoured surface.

In some embodiments, the continuous contoured surface is tangent with the flat bottom portion of the housing at a first end of the contour. The continuous contoured surface may also be tangent with the flat middle portion of the cover at a second end of the contour. In some embodiments, the continuous contoured surface has a constant radius.

In some embodiments, the cavity has a rectangular shape. The curved edge portion of the housing may have four sides that surround the cavity, each side is orthogonal to two adjacent sides. Each side may be connected to an adjacent side by a rounded corner. In some embodiments, the rounded corners have a curvature that corresponds to a curvature of the continuous contoured surface formed by the curved edge portion of the cover and the curved side portion of the housing.

Some embodiments include a crown module that is positioned at least partially within an aperture formed within the curved side portion of the housing. The crown module may include an outer surface configured to receive a rotary user input. The crown module may be offset with respect to a centerline of the housing between the top portion and the flat bottom portion. The offset may be toward the top portion of the housing. The crown module may include a dial having a portion that is higher than an interface between the cover and the housing.

In some example embodiments, a port is formed in the curved side portion of the housing. An acoustic module may be disposed within the housing and configured to produce an audio output through the port. The acoustic module may include an acoustic element and an acoustic cavity that acoustically couples the acoustic element to the port. The port may include an orifice that is offset with respect to the acoustic cavity to prevent the direct ingress of liquid into the acoustic module.

In some embodiments, the device includes a gasket positioned between the housing and the cover. The housing may also include a ledge formed along a perimeter of the cavity. The gasket may be positioned along the ledge that is formed along the perimeter of the cavity. The gasket, the cover, and the housing may be configured to cooperate to form a substantially water-proof seal.

In some example embodiments, the device includes a biosensor module that is disposed in an opening formed in the flat bottom portion of the housing. The biosensor module may include a chassis positioned in the opening of the housing and defining an array of windows. An array of light sources may be attached to the chassis and configured to emit light into the user through the array of windows. The biosensor module may also include an optically transparent rear cover disposed over the chassis and over the array of windows and operative to pass light emitted from the array of light sources into the user. In some embodiments, the rear cover has a convex outer contour.

Some example embodiments are directed to an electronic device having a housing comprising a bottom portion defining an opening and a band attached to the housing and configured to secure the electronic device to a user. A biosensor module may be disposed within the opening of the housing. A rear cover may be disposed over the biosensor module and may include an edge protruding outwardly from the bottom portion of the housing and an outer surface having a convex curved contour. In some embodiments, the outer surface of the rear cover defines one or more windows that provide operational access to one or more optical components of the biosensor module. The one or more

Masimo Ex. 1025
IPR Petition - US D947,842

windows may have a curvature that matches the convex curved contour of the outer surface.

In some embodiments, the biosensor module includes an array of light sources that are configured to emit light into a body of the user. The biosensor module may also include a photodetector configured to receive light produced by a light source of the array of light sources that is reflected from the body and produce a sensor signal. In some cases, the biosensor module is removably coupled to the housing.

In some embodiments, the device also includes a processing unit configured to compute a health metric associated with the user based on the sensor signal. The device may also include a display disposed within the housing and configured to display the health metric.

Some example embodiments are directed to a wearable electronic device, having a housing including a top portion, a cavity formed within the top portion, and a curved side portion that surrounds the cavity. The device may also include a transparent cover disposed over the cavity of the housing and may include a flat middle portion at a center of the transparent cover, a curved outer portion that emanates from and surrounds the flat middle portion and extends outwardly to an edge of the transparent cover, and a mask positioned relative to an internal surface of the transparent cover. The mask may have an outer boundary located proximate to the edge of the transparent cover and an inner boundary located within the curved outer portion of the transparent cover.

In some embodiments, the device includes a display disposed below the transparent cover. A perimeter portion of a viewable area of the display may be disposed below the mask. The device may also include an antenna having a shape that corresponds to a shape of the cavity formed within the housing. The antenna may be disposed in a groove formed in the internal surface of the transparent cover. The groove may be formed between the outer boundary and the inner boundary of the mask. In some embodiments, the cover is formed from a sapphire material. The antenna may be configured to facilitate wireless communication between the wearable electronic device and an external device.

Some example embodiments are directed to an electronic device having a housing including a first end, a second end opposite the first end, a first side extending between the first and second ends, and a second side opposite to the first side and extending between the first and second ends. The first end may define a first groove extending between the first and second sides and may be configured to receive a first lug portion of a first band. The second end may define a second groove extending between the first and second sides and may be configured to receive a second lug portion of a second band. The first and second grooves may have an inwardly curved concave shape with an undercut feature that retains the first and second lug portions. In some embodiments, the first groove extends through a solid portion of the housing to form a continuous interior shape.

In some embodiments, the device includes a display at least partially disposed within a cavity of the housing. A cover may be disposed above the display and at least a portion of the first groove is disposed below the cover. The first and second grooves may be formed at an angle with respect to a centerline of the housing. The first and second grooves may be angled upward toward a top of the housing and inward toward the center of the housing. The first and second grooves may cross the centerline of the housing.

Some example embodiments are directed to a wearable electronic device including a housing and a band attached to the housing and configured to secure the wearable electronic device to a user. A crown may be disposed relative to the housing and configured to receive a rotational input. An encoder may be operatively coupled to the crown and configured to produce an encoder output that corresponds to the rotational input. A speaker module may be disposed within the housing and configured to produce an audio output that corresponds to the encoder output. A haptic device may be disposed within the housing and configured to produce a haptic output that corresponds to the encoder output. In some embodiments, the haptic output is synchronized with the audio output. The crown may be further configured to translate along an axis and actuate a tactile switch.

In some embodiments, the device also includes a display element within the housing. The device may be configured to display a list of items on the display element and scroll the list of items in response to the encoder output. The device may also be configured to synchronize the audio and haptic outputs with the scrolling of the list of items. In some embodiments, the crown is further configured to translate along an axis and actuate a tactile switch. The crown may be operative to select an item of the list of items when the tactile switch is actuated.

Some example embodiments are directed to a wearable electronic device having a housing that includes a bottom portion and an aperture formed in the bottom portion. A band may be attached to the housing and configured to secure the wearable electronic device to a user. A biosensor module may be disposed in the aperture of the housing. The biosensor module may include an array of light sources configured to emit light into a body of the user, and a photodetector configured to receive light produced by a light source of the array of light sources that is reflected from the body and produce a sensor signal. The device may also include a processing unit that is configured to compute a health metric associated with the user based on the sensor signal. A display may be disposed within the housing and configured to display the health metric.

In some embodiments, the array of light sources and the photodetector are configured to function as multiple photoplethysmography (PPG) sensors. Each PPG sensor may be configured to be used to compute a separate health metric. In some embodiments, a first light source of the array of light sources includes a green LED adapted to detect blood perfusion in the body. A second light source of the array of light sources may include an infrared LED adapted to detect water content of the body. The health metric may include one or more of: a heart rate, a respiration rate, a blood oxygenation level, and a blood volume estimate.

In some embodiments, the device also includes at least one pair of electrodes disposed on an exterior surface of the housing. The at least one pair of electrodes may be configured to produce a signal when the at least one pair of electrodes is in contact with the body. In some case, the signal is used to compute an additional health metric that includes one or more of: a heart function, a body fat estimate, and a body fat estimate.

Some example embodiments are directed to a wearable electronic device including a housing and a band attached to the housing and configured to secure the wearable electronic device to a user. The device may also include an array of light emitting diodes (LEDs) disposed within the housing, the array of LEDs being configured to emit light. A photodetector may be disposed within the housing and configured to receive light produced by an LED of the array of LEDs that is reflected from a body of the user and produce a first sensor signal in response to the received light. The device

Masimo Ex. 1025
IPR Petition - US D947,842

may also include at least one pair of electrodes disposed on an exterior surface of the wearable electronic device. The electrodes may be configured to produce a second sensor signal when the electrodes are in contact with a respective portion of the body. The device may also include a processing unit that is configured to compute one or more health metrics based on the first and second sensor signals. The device may also include a display disposed at least partially within the housing and configured to display the one or more health metrics.

Some example embodiments are directed to a wearable electronic device including a housing and a band attached to the housing and configured to secure the wearable electronic device to a user. A cover may be disposed relative to the housing and a display may be attached to a lower surface of the cover. A force sensor may be positioned between the cover and the housing and attaching the cover to the housing. The force sensor may be configured to detect the force of a touch on the cover. The force sensor may also form a barrier to prevent ingress of liquid into the wearable electronic device. In some embodiments, an antenna may be disposed relative to the cover and external from the housing. The antenna may be configured to facilitate wireless communication with an external device.

In some example embodiments, a wearable electronic device may include a housing and a band attached to the housing and configured to secure the wearable electronic device to a user. A display element may be positioned within the housing and a rechargeable battery may be disposed within the housing and operatively coupled to the display element. The device may also include a receive coil within the housing configured to inductively couple with an external transmit coil. A power conditioning circuit may be configured to recharge the rechargeable battery using power received by the receive coil. The power conditioning circuit may be configured to provide power to the display element. The device may also include a first alignment magnet positioned within the receive coil and configured to align the device with respect to a second alignment magnet positioned within the external transmit coil.

Some example embodiments are directed to a wearable electronic device that includes a housing and a band attached to the housing and configured to secure the wearable electronic device to a user. A cover may be positioned relative to the housing and a display may be disposed within the housing and below the cover. A force sensor may be disposed within the housing and configured to detect a force of a touch on the cover. A touch sensor may be disposed between the display and the cover. The touch sensor may be configured to detect a location of the touch on the cover. In some embodiments, the force sensor is disposed along a perimeter of the display. The device may also include a processing unit and memory disposed within the housing. The processing unit may be configured to interpret a touch gesture on a surface of the cover using a force output from the force sensor and a touch output from the touch sensor.

BRIEF DESCRIPTION OF THE DRAWINGS

The disclosure will be readily understood by the following detailed description in conjunction with the accompanying drawings, wherein like reference numerals designate like structural elements.

FIG. **1** depicts an example wearable electronic device having a device body and band.

FIG. **2** depicts an example schematic diagram of a wearable electronic device.

FIG. **3** depicts an example functional diagram for a wearable electronic device.

FIG. **4** depicts an example wearable electronic device as part of a system of devices.

FIG. **5** depicts a system of interchangeable components for a wearable device.

FIG. **6** depicts an example wearable electronic device having a device body and band.

FIG. **7** depicts an exploded view of components of an example wearable electronic device.

FIG. **8** depicts an example housing for a wearable electronic device.

FIG. **9** depicts an example force sensor configured to use a capacitive measurement.

FIGS. **10**A-B depict plan views of example force sensors.

FIG. **11** depicts an example force sensor configured to use a resistive measurement.

FIG. **12** depicts an example pixelated force sensor configured to use a resistive measurement.

FIGS. **13**A-B depict example force sensor structures.

FIGS. **14**A-C depict an example touch sensor based on mutual capacitance.

FIGS. **15**A-B depict an example touch sensor based on self capacitance.

FIG. **16** depicts an example device having biosensors.

FIG. **17** depicts an example device having wireless communications with an external device.

FIG. **18** depicts an example electronic device and example dock of an inductive charging system.

FIG. **19** depicts a block diagram of an example inductive charging system.

FIG. **20** depicts an example acoustic module.

FIGS. **21**A-B depict an example cover and antenna.

FIGS. **22**A-B depict an example haptic module.

FIG. **23** depicts an example device having a crown module with an encoder.

FIGS. **24**A-B depict an example device having a crown module with a tactile switch.

FIGS. **25**A-C depict an example receiving feature for a band.

FIG. **26** depicts example elements of a display.

DETAILED DESCRIPTION

Provided herein are descriptions and examples of a consumer product, which may include a portable electronic device, a wearable electronic device, or other type of device. By way of example and not by way of limitation, the consumer product may be an electronic device, a mechanical device, or an electromechanical device. Specific example devices include mobile phones, personal digital assistants, music players, timekeeping devices, health monitoring devices, tablet computers, laptop computers, glasses (electronic or otherwise), portable storage devices, and the like.

In one particular embodiment, the consumer product is a portable and, more specifically, a wearable consumer product. A wearable consumer product is one that can be worn by or otherwise secured to a user. For example, the consumer product may be a wearable electronic device including, but not limited to, a wearable computer, a wearable watch, a wearable communication device, a wearable media player, a wearable health monitoring device, and the like. A wearable consumer product may be worn by a user in a variety of ways. In some examples, the consumer product is a wrist-worn product and may include a band that can be wrapped around a user's wrist to secure the consumer product to the user's body. The device may include one or more other types

Masimo Ex. 1025
IPR Petition - US D947,842

of attachments including, for example, an armband, lanyard, waistband, chest strap, and the like.

Some aspects of the disclosure are directed to a wearable electronic device having improved functionality and/or versatility as compared to some traditional wearable devices. For example, some aspects of the disclosure are directed to a consumer product, such as a portable electronic device, having an expansive feature set integrated or incorporated into a compact form factor. In some aspects of the present disclosure, a consumer product may integrate or combine multiple subsystems into a single device to provide a wide range of functionality, including biometric sensing, touch-based user input, near-field communications, and other desirable features. In some aspects, multiple subsystems are integrated into the relatively compact space of a wrist-worn device. Some aspects of the following disclosure are directed to the integration of a variety of subsystems or modules to provide functionality that may not be possible using some traditional device platforms. In some cases, the configuration and/or functionality provided by the various subsystems may be configurable by the end user, the manufacturer, and/or a vendor of the device. Example subsystems or modules of a consumer product and their respective functions are described below with respect to FIGS. **2** and **3**.

Some aspects of the disclosure are directed to a consumer product that is configured to communicate wirelessly with any of a number of other devices, such as a mobile phone, computer, tablet computing devices, personal media players, televisions, networked home appliances, networked home controls, electronic systems in vehicles, and so on. Through wireless communication with other devices, the consumer product may transmit and/or receive various notifications, messages, or other information between devices. The wireless communication may also facilitate the relay of alerts or other device outputs to notify the user of an event or action. In some aspects, the consumer product may communicate wirelessly with any of a number of electronic accessories, including headset devices, portable speaker devices, portable microphone devices, display screens, and so on. An example communication system is described below with respect to FIG. **4** and with respect to other examples provided herein.

In some aspects, the consumer product may include a system of interchangeable components used to attach or secure the consumer product to the user. The system of interchangeable components may include a set of interchangeable bands or attachment devices that are configured to connect or attach to a receiving feature on the body of the product. The receiving feature may be standardized within the system of interchangeable components and allow multiple types of bands or attachment devices to be used with the same housing or body. The system of interchangeable components may also allow for an interchange between different bodies, which may include different types of electronic devices or other consumer products. Each body of the different devices or products may have a similar receiving feature that is standardized within the system of interchangeable components. An example system of interchangeable components is described below with respect to FIG. **5** and with respect to other examples provided herein.

Some aspects of the present disclosure are directed to a consumer product that includes a body that includes a case or housing used to protect as well as support the internal components of the product in their assembled position. The housing may enclose and support various components, including, for example, integrated circuits, subsystems, modules, and other internal components of the device. In some aspects, the housing forms a water-resistant or waterproof barrier and also provides structural rigidity necessary to protect internal components. The housing may be formed as a single piece, which may enhance the structural rigidity, water impermeability, and manufacturability of the housing. An example housing and example internal components for a consumer product are provided below with respect to FIGS. **6-8** and with respect to other examples provided herein.

In some aspects, the consumer product includes a force sensor that is configured to detect and measure the magnitude of a force or pressure on a surface of the product. In some implementations, the force sensor includes a capacitive-based sensor that is configured to estimate the force based on a deflection or movement between capacitive plates that is caused by and correlates to the amount of force caused by a touch. In some implementations, the force sensor is a resistance- or charge-based sensor that is configured to estimate the force based on the deflection of a sheet or film that is positioned relative to the touch-sensitive surface of the product. In some implementations, the output from the force sensor is combined with the output from a touch sensor, which may be self-capacitive or mutually capacitive, or a combination of the two. Example force and touch sensors are described below with respect to FIGS. **9-15**B and with respect to other examples provided herein.

In some aspects, the consumer product includes one or more biosensors. The biosensors may include optical and/or electronic biometric sensors that may be used to compute one or more health metrics. Example health metrics include, without limitation, a heart rate, a respiration rate, blood oxygenation level, a blood volume estimate, blood pressure, or a combination thereof. In some embodiments, the biosensors include an electrical sensor that may be used to measure electrocardiographic (ECG) characteristics, galvanic skin resistance, and other electrical properties of the user's body. An example consumer product having multiple biosensors is described below with respect to FIG. **16** and with respect to other examples herein.

In some aspects, the consumer product is configured to perform wireless communication with an external device. In some implementations, the wireless communication may include a Near Field Communication (NFC) interface. The NFC interface may be used to identify the device and initiate a secure data connection, which may be used to authorize transactions, purchases, or conduct other forms of e-commerce. An example consumer product having wireless communications with an external device is described in more detail below with respect to FIG. **17** and with respect to other examples herein.

In some aspects, the consumer product is configured to recharge an internal battery using a wireless charging system. In some implementations, the consumer product includes one or more receiving inductive coils that are configured to cooperate with one or more transmitting inductive coils that are located in a charging dock or other external device. The wireless charging system may allow the transfer of power and/or wireless communications with the consumer product without the use of an external port or terminal connection. An example consumer product having wireless charging capabilities is described in more detail below with respect to FIGS. **18-19** and with respect to other examples herein.

In some aspects, the consumer product includes one or more acoustic modules that are configured to function as a speaker and/or a microphone for the product. The speaker and/or microphone may include features that enhance the water/liquid resistance or impermeability of the consumer

Masimo Ex. 1025
IPR Petition - US D947,842

product. The consumer product may also include a haptic module or actuator that is configured to produce a haptic output that may be perceived by the user. In some implementations, the output of an acoustic module, such as a speaker, and the haptic module may be used to provide feedback or an alert to the user. In some cases, an acoustic module and the haptic module provide feedback to the user and may be coordinated with a user input, such as user-interface selecting, user-interface scrolling, or other user input command. An example acoustic module is described below with respect to FIG. **20** and an example haptic module is described below with respect to FIGS. **22**A-B.

In some aspects, the consumer product includes a dial or crown that is coupled to an encoder or other rotary sensor for detecting a rotary input. In some implementations, the output from the optical encoder is used to drive an aspect of a user interface or control other functionality of the product. Additionally, the dial or crown may include a tactile switch that can be actuated by pressing inward on the dial or crown. An example consumer product having a crown is described below with respect to FIGS. **23**-**24**B and with respect to other examples herein.

The description that follows includes sample devices, components, modules, systems, methods, and apparatuses that embody various elements of the present disclosure. However, it should be understood that various elements of the described disclosure may be combined and/or practiced in a variety of forms in addition to those described herein. In particular, the modules and components are described in a particular combination with respect to some examples provided below. However other combinations are possible, which may be achieved by adding, removing, and/or re-arranging modules to obtain a device or system having the desired characteristics.

FIG. **1** depicts a wearable consumer product **10**. For example, the consumer product **10** may be a wearable electronic device. In one example, the consumer product **10** may be a wearable multifunctional electronic device including multiple functionalities such as time keeping, health monitoring, sports monitoring, medical monitoring, communications, navigation, computing operations, and/or the like. The functionalities may include but are not limited to: keeping time; monitoring a user's physiological signals and providing health-related information based on those signals; communicating (in a wired or wireless fashion) with other electronic devices or services, which may be different types of devices having different functionalities; providing alerts to a user, which may include audio, haptic, visual and/or other sensory output, any or all of which may be synchronized with one another; visually depicting data on a display; gathering data form one or more sensors that may be used to initiate, control, or modify operations of the device; determining a location of a touch on a surface of the device and/or an amount of force exerted on the device, and using either or both as input; accepting voice input to control one or more functions; accepting tactile input to control one or more functions; capturing and transmitting images; and so on. These and other functions and features will be described in more detail herein.

The wearable consumer product **10** can take a variety of forms. In one example, the consumer product **10** may be a wrist-worn electronic device. The device may include a variety of types of form factors including, wristbands, armbands, bracelets, jewelry, and/or the like.

In the illustrated embodiment, the consumer product **10** includes a device body **11**. The device body **11** may include a housing that carries, encloses and supports both externally and internally various components (including, for example. integrated circuit chips and other circuitry) to provide computing and functional operations for the consumer product **10**. The components may be disposed on the outside of the housing, partially within the housing, through the housing, completely inside the housing, and the like. The housing may, for example, include a cavity for retaining components internally, holes or windows for providing access to internal components, and various features for attaching other components. The housing may also be configured to form a water-resistant or water-proof enclosure for the body **11**. For example, the housing may be formed from as a single unitary body and the openings in the unitary body may be configured to cooperate with other components to form a water-resistant or water-proof barrier.

Examples of components that may be contained in the device body **11** include processing units, memory, display, sensors, biosensors, speakers, microphones, haptic actuators, batteries, and so on. In some cases, the device body **11** may take on a small form factor. In cases such as these, the components may be packaged and/or in order to provide the most functionality in the smallest space. The components may also be configured to take up a minimal amount of space, which may facilitate the device body **11** having a small form factor. Additionally, the integration and assembly of the various components may be configured to enhance the reliability of the consumer product **10**.

The construction of the housing of the device body **11** may be widely varied. For example, housing may be formed from a variety of materials including plastic, rubber, wood, silicone, glass, ceramics, fiber composites, metal or metal alloys, (e.g., stainless steel, aluminum), precious metals (e.g., gold, silver), or other suitable materials, or a combination of these materials.

Also in the illustrated embodiment, the wearable electronic device includes a band **12** or strap or other means for attaching to a user. The band **12** may, for example, be configured to attach to the body and provide a loop for securing to the wrist of the user. The band **12** may be integral with the housing or it may be a separate part. If integral, the band **12** may be a continuation of the housing. In some cases, the integral band may be formed from the same material as the housing. If the band **12** is separate, the band may be fixed or releasably coupled to the housing. In both cases, the band **12** may be formed from similar or different materials as the housing. In most cases, the band **12** is formed from a flexible material such that it can conform to a user's body. Furthermore, the band **12** itself may be a single integral part or it may include attachment ends that provide an open and closed configuration. The attachment ends may, for example, be manifested as a clasp or other similar attachment mechanism or device. This particular configuration allows a user to open the band **12** for placement on the arm and close the band **12** in order to secure the band and body to the arm. The band **12** may be widely varied. By way of example, they may be formed from rubber, silicone, leather, metal, mesh, links and/or the like.

FIG. **2** depicts an example schematic diagram of a wearable electronic device. By way of example, device **100** of FIG. **2** may correspond to the consumer product **10** shown in FIG. **1**. To the extent that multiple functionalities, operations, and structures are disclosed as being part of, incorporated into, or performed by device **100**, it should be understood that various embodiments may omit any or all such described functionalities, operations, and structures. Thus, different embodiments of the device **100** may have

Masimo Ex. 1025
IPR Petition - US D947,842

some, none, or all of the various capabilities, apparatuses, physical features, modes, and operating parameters discussed herein.

As shown in FIG. **2**, the device **100** includes one or more processing units **102** that are configured to access a memory **104** having instructions stored thereon. The instructions or computer programs may be configured to perform one or more of the operations or functions described with respect to the device **100**. For example, the instructions may be configured to control or coordinate the operation of a display **120**, one or more input/output components **106**, one or more communication channels **108**, one or more sensors **110**, a speaker **122**, a microphone **124** and/or one or more haptic feedback devices **112**.

The processing units **102** of FIG. **2** may be implemented as any electronic device capable of processing, receiving, or transmitting data or instructions. For example, the processing units **102** may include one or more of: a microprocessor, a central processing unit (CPU), an application-specific integrated circuit (ASIC), a digital signal processor (DSP), or combinations of such devices. As described herein, the term "processor" is meant to encompass a single processor or processing unit, multiple processors, multiple processing units, or other suitably configured computing element or elements.

The memory **104** can store electronic data that can be used by the device **100**. For example, a memory can store electrical data or content such as, for example, audio and video files, documents and applications, device settings and user preferences, timing and control signals or data for the various modules, data structures or databases, and so on. The memory **104** can be configured as any type of memory. By way of example only, the memory can be implemented as random access memory, read-only memory, Flash memory, removable memory, or other types of storage elements, or combinations of such devices.

In the schematic diagram of FIG. **2**, the one or more input components **106** are represented as a single item within the schematic diagram. However, input components **106** may represent a number of different input components, including buttons, switches, and dials for accepting user input, and so on. More specifically, the input components **106** may correspond to the buttons, dials, crowns or other devices for receiving input. Generally, the input components **106** are configured to translate a user-provided input into a signal or instructions that may be accessed using instructions executed on the processing units **102**. In the present example, the input components **106** may include the hardware configured to receive the user input (e.g., button, switch, crown, and encoder) which is operatively coupled to circuitry and firmware used to generate signals or data that are able to be accessed using processor instructions. Each input component **106** may include specialized circuitry for generating signals or data and, additionally or alternatively, circuitry and firmware for generating signals or data may be shared between multiple input components **106**. In some cases, the input components **106** produce user-provided feedback for application-specific input that corresponds to a prompt or user interface object presented on display **120**. For example, the crown (item **642** of FIG. **6**) may be used to receive rotational input from the user, which may be translated into an instruction to scroll a list or object presented on the display **120**. The input components **106** may also produce user input for system-level operations. For example the input components **106** may be configured to interact directly with hardware or firmware being executed on the device **100** for system-level operations, including, without limitation, power on, power off, sleep, awake, and do-not-disturb operations.

As shown in FIG. **2**, the device **100** may also include one or more acoustic elements, including a speaker **122** and a microphone **124**. The speaker **122** may include drive electronics or circuitry and may be configured to produce an audible sound or acoustic signal in response to a command or input. Similarly, the microphone **124** may also include drive electronics or circuitry and is configured to receive an audible sound or acoustic signal in response to a command or input. The speaker **122** and the microphone **124** may be acoustically coupled to respective ports or openings in the housing that allow acoustic energy to pass, but may prevent the ingress of liquid and other debris. As shown in FIG. **2**, the speaker **122** and microphone **124** are also operatively coupled to the processing units **102**, which may control the operation of the speaker **122** and microphone **124**. In some cases, the processing units **102** are configured to operate the speaker **122** to produce an acoustic output that corresponds to an application or system-level operation being performed on the device **100**. In some cases, the speaker **122** is operatively coupled to other modules, including, for example, input components **106**, such as a crown or button. In some implementations, the device **100** is configured to produce an audible output that corresponds to the operation of the crown or buttons using the speaker **122**. The microphone **124** may be configured to produce an output or signal in response to an acoustic stimulus. For example, the microphone **124** may be operatively coupled to the memory **104** and may be configured to record audio input, including human speech, music, or other sounds. In some cases, the microphone **124** may be configured to receive voice signals, which may be interpreted as voice commands by the processing units **102**.

The one or more communication channels **108** may include one or more wireless interface(s) that are adapted to provide communication between the processing unit(s) **102** and an external device. In general, the one or more communication channels **108** may be configured to transmit and receive data and/or signals that may be interpreted by instructions executed on the processing units **102**. In some cases, the external device is part of an external communication network that is configured to exchange data with wireless devices. Generally, the wireless interface may include, without limitation, radio frequency, optical, acoustic, and/or magnetic signals and may be configured to operate over a wireless interface or protocol. Example wireless interfaces include radio frequency cellular interfaces, fiber optic interfaces, acoustic interfaces, Bluetooth interfaces, infrared interfaces, USB interfaces, Wi-Fi interfaces, TCP/IP interfaces, network communications interfaces, or any conventional communication interfaces.

In some implementations, the one or more communications channels **108** may include a dedicated wireless communication channel between the device **100** and another user device, such as a mobile phone, tablet, computer, or the like. In some cases, output, including audio sounds or visual display elements, are transmitted directly to the other user device for output to the user. For example, an audible alert or visual warning may be transmitted to a user's mobile phone for output on that device. Similarly, the one or more communications channels **108** may be configured to receive user input provided on another user device. In one example, the user may control one or more operations on the device **100** using a user interface on an external mobile phone, table, computer, or the like.

Additionally, as described in more detail below with respect to FIG. **17**, the communications channels **108** may include a Near Field Communication (NFC) interface. The NFC interface may be used to identify the device and initiate a secure data connection, which may be used to authorize transactions, purchases, or conduct other forms of e-commerce.

As shown in FIG. **2**, the device **100** also includes one or more sensors **110** represented as a single item within the schematic diagram. However, the sensors **110** may represent a number of different sensors, including devices and components that are configured to detect environmental conditions and/or other aspects of the operating environment. Example sensors **110** include an ambient light sensor (ALS), proximity sensor, temperature sensor, barometric pressure sensor, moisture sensor, and the like. Thus, the sensors **110** may also be used to compute an ambient temperature, air pressure, and/or water ingress into the device. In some embodiments, the sensors **110** may include one or more motion sensors for detecting movement and acceleration of the device **100**. The one or more motion sensors may include one or more of the following: an accelerometer, a gyroscope, a tilt sensor, or other type of inertial measurement device.

The device **100** also includes one or more biosensors **118** and may include optical and/or electronic biometric sensors that may be used to compute one or more health metrics. As described in more detail below with respect to FIG. **16**, one or more of the biosensors **118** may include a light source and a photodetector to form a photoplethysmography (PPG) sensor. The optical (e.g., PPG) sensor or sensors may be used to compute various health metrics including, without limitation, a heart rate, a respiration rate, blood oxygenation level, a blood volume estimate, blood pressure, or a combination thereof. One or more of the biosensors **118** may also be configured to perform an electrical measurement using one or more electrodes. The electrical sensor(s) may be used to measure electrocardiographic (ECG) characteristics, galvanic skin resistance, and other electrical properties of the user's body. Additionally or alternatively, one or more of the biosensors **118** may be configured to measure body temperature, exposure to UV radiation, and other health-related information.

The device **100** may also include one or more haptic devices **112**. The haptic device **112** may include one or more of a variety of haptic technologies such as, but not necessarily limited to, rotational haptic devices, linear actuators, piezoelectric devices, vibration elements, and so on. In general, the haptic device **112** may be configured to provide punctuated and distinct feedback to a user of the device. More particularly, the haptic device **112** may be adapted to produce a knock or tap sensation and/or a vibration sensation. As shown in FIG. **2**, the haptic device **112** may be operatively coupled to the processing unit **102** and memory **104**. In some embodiments, the haptic device **112** may be directly controlled by the processing unit **102**. In some embodiments, the haptic device **112** may be controlled, at least in part, by the operation of an input component **106**, including, for example, a button, dial, crown, or the like. The operation of the haptic device **112** may also be paired or linked to the operation of one or more other output devices, including, for example, the display **120** or the speaker **122**.

As shown in FIG. **2**, the device **100** may include a battery **114** that is used to store and provide power to the other components of the device **100**. The battery **114** may be a rechargeable power supply that is configured to provide power to the device **100** while it is being worn by the user. The device **100** may also be configured to recharge the battery **114** using a wireless charging system. Accordingly, in some cases, the device may include a wireless power module **116** that may be configured to receive power from an external device or dock. The wireless power module **116** may be configured to deliver power to components of the device, including the battery **114**. The wireless power module **116** and an external charging station or dock may also be configured to transmit data between the device and a base or host device. In some cases, the wireless power module **116** may interface with the wireless charging station or dock to provide an authentication routine that is able to identify specific hardware, firmware, or software on the device in order to facilitate device maintenance or product updates. A more detailed description of an example wireless charging station is provided below with respect to FIGS. **18-19**.

The device **100** may include a variety of other components, including for example, a camera or camera modules. The camera may be configured to capture an image of a scene or subject located within a field of view of the camera. The image may be stored in a digital file in accordance with any one of a number of digital formats. In some embodiments, the device **100** includes a camera, which includes an image sensor formed from a charge-coupled device (CCD) and/or a complementary metal-oxide-semiconductor (CMOS) device. The camera may also include one or more optical components disposed relative to the image sensor, including, for example, a lens, an filter, a shutter, and so on.

FIG. **3** depicts functional elements of the device **100**, in accordance with some embodiments. In particular, FIG. **3** depicts the inputs that may be received and outputs that may be produced on an example device **100**. By way of example, the device **100** may correspond to the devices shown in FIGS. **1** and **2**. As shown in FIG. **3**, the device **100** may include a force input **302** that may be produced using a force sensor that is configured to detect and measure the magnitude of a force of a touch on a surface of the device. The force input **302** may include a non-binary output that is generated in response to a touch. For example, the force input **302** may include a range of values or analog value that corresponds to the amount of force exerted on a surface of the device. Additionally or alternatively, the force input **302** may include binary (e.g., on, off) output in response to the force of a touch. The force input **302** may be used to control various aspects of the device. For example, the force input **302** may be used to control an aspect, such as a cursor or item selection on a user interface presented on the display of the device. The force input **302** may also be used to control the audio output **308**, haptic output **312**, and other functionality of the device. The force input **302** may also be used to distinguish between different types of input from the user. For example, a light touch from the user may be interpreted as a scroll command and used to index or scroll through a list of items on the display. A harder touch from the user may be interpreted as a selection or confirmation of an item on the display. In some embodiments, the force input **302** is used to distinguish an intentional touch from the user from an incidental or accidental touch that may be ignored.

As shown in FIG. **3**, the device **100** may also include a touch input **306** that may be produced using a touch sensor that is configured to detect and measure the location of a touch on a surface of the device. In some implementations, the touch sensor is a capacitive-based touch sensor that is disposed relative to the display or display stack of the device. The touch sensor may be a separate non-integrated sensor relative to the force sensor. In alternative embodiments, the touch sensor may also be physically and/or logically integrated with the force sensor to produce a

Masimo Ex. 1025
IPR Petition - US D947,842

combined output. The touch input **306** may be used to control various aspects of the device. For example, the touch input **306** may be used to control an aspect of the user interface presented on the display of the device. The touch input **306** may also be used to control the audio output **308**, haptic output **312**, and other functionality of the device.

In some cases, the logical integration of the force input **302** and the touch input **306** enhances the versatility or adaptability of device **100** by enabling a more sophisticated user interface than is currently available on some traditional wearable devices. In particular, the force input **302** and the touch input **306** may be combined to interpret a wider range of gestures and input commands than may be possible using, for example, only a touch input. For example, the force input **302** may provide a magnitude of a force of a touch, which may be used to distinguish between two touch input commands that have a similar location or gesture path. An improved touch interface using both force input **302** and touch input **306** may be particularly advantageous when interpreting touch commands on a relatively small area surface, such as a display screen or cover glass of a wearable electronic device.

As shown in FIG. **3**, the device **100** may also include a button/dial input **310** that may be produced using an input device that is configured to receive input from the user. As described previously, the device **100** may include one or more buttons disposed on or near an external surface of the housing and are configured to receive input from a user. The device may also include a dial or crown that is configured to accept rotational input from the user. As described in more detail below with respect to FIGS. **24**A-B, the dial or crown may also include a push feature that is adapted to accept input from the user.

The device **100** may also accept audio input **314** using a microphone or other acoustic sensing device. The audio input **314** may be adapted to accept input from the user, including voice commands and other audio signal input. The audio input **314** may also be adapted to detect and measure ambient audio conditions that may be used to adjust the volume of the audio output **308** or operation of the haptic output **312**. The audio input **314** may also be used to record an audio stream or voice message in accordance with an audio recording application or software program.

As shown in FIG. **3**, the device **100** may include a display output **304** in accordance with some embodiments. The display output **304** includes visual or graphical output that may be produced using the display element of the device. In some embodiments, the display output **304** includes a graphical user interface produced using an operating system or software application executed on one or more processing units of the device. In one example, the display output **304** includes a graphical depiction that resembles a watch face or other timekeeping device. In other examples, the display output **304** includes a graphical interface for an e-mail, text messaging, or other communication-oriented program. The display output **304** may also present visual information that corresponds to one of the other functional aspects of the device **100**. For example, the display output **304** may include information that corresponds to the biosensor input **320**, sensor input **318**, force input **302**, touch input **306**, and others.

As shown in FIG. **3** the device **100** may include an audio output **308** that may be produced with a speaker or acoustic module. The audio output **308** may include sounds or audio signals that are associated with the operation of the device. For example, the audio output **308** may correspond to the operation of an input device to provide audio feedback to the user. For example the audio output **308** may correspond to an input received in the form of a force input **302**, touch input **306**, and/or button/dial input **310**. In some cases, the audio output **308** may also include a portion of an auditory alert that may be produced alone or combined with a haptic output **312** and/or display output **304** of the device **100**.

The device **100** may also include a sensor input **318** produced using one or more sensors that may be configured to monitor and detect various environmental conditions. For example, the sensor input **318** may include signals or data produced using an ambient light sensor, proximity sensor, temperature sensor, barometric pressure sensor, or other sensor for monitoring environmental conditions surrounding or near the device. In general, the sensor input **318** may be used to adapt the functionality of the device **100** to conform to the one or more environmental conditions. For example, the brightness of the display output **304**, the volume of the audio output **308**, and/or the operation of the input to the device **100** may be based on the sensor input **318**.

In some embodiments, the sensor input **318** includes input produced by one or more motion sensors. The motion sensors may include one or more of the following: an accelerometer, a gyroscope, a tilt sensor, or other type of inertial measurement device. A sensor input **318** produced using one or more motion sensors may be used to monitor and detect changes in motion of the device **100**. Changes in linear and angular motion may be used to determine or estimate an orientation of the device relative to a known location or fixed datum. The sensor input **318** produced from the one or more motion sensors may also be used to track the movement of the user. The movement of the user may be used to facilitate navigation or map-guided functionality of the device. Additionally, input related to the gross movement of the user can be used as a pedometer or activity meter, which may be stored and tracked over time to determine health metrics or other health-related information. Additionally, in some embodiments, sensor input **318** from the one or more motion sensors may be used to identify motion gestures. For example, the motion sensors can be used to detect an arm raise or the position of a user's body (within a predetermined confidence level of certainty).

The device **100** may also include a biosensor input **320** produced using one or more biosensors or biosensor modules that are configured to monitor physiological and/or health conditions of a user. As discussed above with respect to FIG. **2**, the device may include one or more optical sensors for measuring heart rate, blood pressure, oxygen saturation, or a combination thereof. The device may also include one or more sensors having electrical contacts that are disposed to contact the user's body. The sensors may be configured to measure electrocardiographic (ECG) characteristics, galvanic skin resistance, and other electrical properties of the user's body. Additionally or alternatively, sensors may be configured to measure body temperature, exposure to UV radiation, and other health related information. The biosensor input **320** may be combined with other aspects of the device to provide heath-monitoring functionality. For example, the biosensor input **320** may be used to compute data that is presented using the display output **304**. The operation of the biosensor input **320** may also be controlled using the force input **302**, touch input **306**, or other user input **310** to provide an interactive health monitoring function or application.

As shown in FIG. **3**, the device may include a haptic output **312** that may be produced using one or more haptic devices that are configured to provide haptic feedback to the user. In particular, the haptic output **312** may be produced

Masimo Ex. 1025
IPR Petition - US D947,842

using one or more electromechanical subassemblies that are configured to induce motion or vibration in the device, which may be perceived or sensed by the user. In some cases, the haptic actuator or device is tuned to operate based on a resonance or near resonance with respect to the device, which may enhance haptic output. In some cases, the haptic actuator or device is configured to operate based on a resonance or near resonance with respect to some components of the device, such as the band or clasp of the device.

In some embodiments, the haptic output **312** may correspond to the operation of one or more other modules or subsystems. For example, the haptic output **312** may include a vibration or haptic feedback that corresponds to an audio alert or visual alert or signal produced by the acoustic module or display, respectively. Additionally or alternatively, the haptic output **312** may be operated in conjunction with an input from the user. The haptic output **312** may include haptic or force feedback that confirms that the user input was or is being received. By way of example, a haptic output **312** may include a click or vibration when the crown of the device is turned or a button is depressed. The haptic output **312** may also be coordinated with other functionality of the device including, for example, message transmission operations, power management operations, force sensor operations, biosensor operations, to provide a notification, to provide an alert, and others.

As shown in FIG. **3**, the device **100** may also include communications input/output (I/O) **316**, which may facilitate communication with an external device or system. The communications I/O **316** may be produced using one or more wireless interfaces, including radio frequency cellular interfaces, fiber optic interfaces, acoustic interfaces, Bluetooth interfaces, Near Field Communication interfaces, infrared interfaces, USB interfaces, Wi-Fi interfaces, TCP/IP interfaces, network communications interfaces, or any conventional communication interfaces. In some cases, the communications I/O **316** may include signals and data received from an external device that has been paired or is otherwise in electronic communication with the device **100**. The external data included in the communications I/O **316** may include, for example, message data associated with an electronic communication, notification data associated with an event, and/or data related to audio or visual content. The communications I/O **316** may also include an authorization or identification of external devices in communication with the device **100** or users associated with one or more external devices. Similarly, the communications I/O **316** may be used to output various forms of data or signals to one or more devices or systems that are external to the device **100**. For example, the communications I/O **316** may include data or computations that are produced using the biosensor input **320** and/or the sensor input **318**.

FIG. **4** depicts an example wearable electronic device **100** as part of a system of devices. By way of example, the wearable electronic device **100** of FIG. **4** may correspond to the devices shown in any of the previous figures. Generally, the wearable electronic device **100** may communicate wirelessly with any of a number of other devices, such as mobile phone **420**, computer **430**, tablet computing devices, personal media players, televisions, networked home appliances, networked home controls, electronic systems in vehicles, and so on. Additionally, the wearable electronic device **100** may communicate wirelessly with any of a number of electronic accessories, including headset devices, portable speaker devices, portable microphone devices, display screens, and so on. Communication may be through a wired or wireless connection, including any technology mentioned herein.

In some embodiments the wearable electronic device **100** may accept a variety of bands, straps, or other retention mechanisms (collectively, "bands"). These bands may be removably connected to the electronic device by a feature formed into the band or band assembly that is accepted in a recess or other aperture within the device and locks thereto. An example band interface is described in more detail below with respect to FIGS. **25**A-C.

In general, a user may change combinations of bands and electronic devices, thereby permitting mixing and matching of the two categories. It should be appreciated that devices having other forms and/or functions may include similar recesses and may releasably mate with a lug and/or band incorporating a lug. In this fashion, a system of bands and devices may be envisioned, each of which is compatible with another. A single band may be used to connect to devices, as one further example; in such embodiments the band may include electrical interconnections that permit the two devices to transmit signals to one another and thereby interact with one another.

Insofar as the electronic device **100** may connect either physically or through a data communication link with other computing devices, the combination of devices and bands may be thought of as an ecosystem having multiple parts that interact with one another, may intelligently communicate with one another, may share functionality and/or may substitute for one another in terms of operations, output, input and the like. Examples of devices existing in such an ecosystem follow, but are illustrative rather that limiting.

As one example, a number of electronic devices **100**, **420**, **430** may each have identical or similar attachment structures that permit them to share a band or connector. A user may thus change the interconnected band and device(s) with respect to one another, permitting a number of different physical connections between different ecosystem components. In some embodiments, a band that serves to retain an electronic device only may be swapped for bands having additional functionalities, such as transmitting data between devices connected to the band, adding functionality to a connected device that the device lacks, providing additional power to a connected device, and so on. Further, different bands may look different, so that the appearance of the electronic device(s) in combination with a band(s) may change by changing the band(s) and/or device(s) with respect to one another.

As another example, electronic devices **100**, **420**, **430** may communicate with one another as part of the overall ecosystem. Data may be passed from one device **420** to another **100**. This may be useful if the user **410** is wearing one electronic device **100** but is not near another device **430** that wishes to notify the user or interact with the user in some fashion. Continuing the example, the computer **430** may transmit a reminder or message to the wearable device **100** to gain the user's attention. As another example, the computer **430** (or any other electronic device in the ecosystem) may transmit a state of an application or even the device itself to the wearable device **100**. Thus, for example, if an application operating on the computer needs the user's attention, it may be gained through an alert issued by the wearable device.

Data communication between devices in an ecosystem may also permit the devices to share functionality. As one non-limiting example, electronic devices may share sensor data with one another to permit one device access to data it

Masimo Ex. 1025
IPR Petition - US D947,842

normally would not have, from a sensor it does not physically incorporate. Thus, any given device **100**, **420**, **430** may draw on the abilities of other devices in the ecosystem to provide an enhanced and relatively seamless experience for a user **410**.

FIG. **5** depicts a system **500** of interchangeable components for a wearable device. By way of example, one or more of the devices of FIG. **5** may correspond to the devices shown in any of the previous figures. FIG. **5** depicts a system **500** including a variety of interchangeable components, including multiple device bodies **515**, **525**, **535** that are configured to connect via a standard interface to any one of a number of different bands **551***a-b*, **552***a-b*, **553***a-b*, **554***a-b*, and **555***a-b*. In addition, each of the three devices may be configured to connect via a standard interface to another type of non-band component, such as a lug **556***a-b*, non-band component, or other device.

As shown in FIG. **5**, the system **500** may include a body or device that is adapted to attach to one or more bands, straps, or other similar component that may be used to attach the device to the body of a user. In some embodiments, the device may be interchangeable or interchanged to provide a different set of functions or features. In some embodiments, the bands or attachment components may be interchangeable or interchanged to provide desired functionality or features.

In the example depicted in FIG. **5**, each of the devices includes at least one receiving feature **504** that is configured to interconnect with a corresponding feature **502** that is attached to or integrally formed with the end of each of the bands or other mating parts. In some embodiments, receiving feature **504** includes a channel or groove that is formed in one end of the device body. The mating feature **502** of a respective band or component may be configured to slidably engage with the receiving feature **504** of a respective device body to attach the band or component. An example receiving feature is described in more detail below with respect to FIGS. **25**A-C. In some embodiments, the receiving feature **504** and the mating feature **502** are standardized in the system **500** and, thus, any of the bands (**551***a-b*, **552***a-b*, **553***a-b*, **554***a-b*, and **555***a-b*) can be interchangeably used with any of the device bodies **515**, **525**, **535**.

With respect to FIG. **5**, each of the bands may be formed from a different material or using a different construction. In the present example, bands **551***a-b* may be formed from a textile material that may be constructed from a pattern of thread or fiber material. The textile material may include a variety of materials, including natural fibers, synthetic fibers, metallic fibers, and so on. The bands **552***a-b* may be formed from a woven material and may be constructed from an array of warp fibers or threads interwoven with one or more weft fibers or threads. Similarly, the warp and weft fibers may include a variety of materials, including natural fibers, synthetic fibers, metallic fibers, and so on. The bands **553***a-b* may be formed from leather material **553***a-b*. In one example, the bands **553***a-b* are formed from a sheet or strip of cowhide; however, the bands **553***a-b* may also be formed from one of any number of types of animal hide. The leather material **553***a-b* may also include a synthetic leather material, such as vinyl or plastic. The bands **554***a-b* may be formed from a metallic mesh or link construction. For example the bands **554***a-b* may be formed from a Milanese mesh or other similar type of construction. The bands **555***a-b* may be formed from a silicone or other elastomer material.

In some cases, the band is a composite construction including various materials, which may be selected based on the end use or application. In some embodiments, a first band strap, or a first portion of the first band strap, may be made up of a first material and a second band strap, or a second portion of the second band strap, may be made from a second, different material. The band may also be made up of a plurality of links and, as such, the band may be resizable by, for example, adding or removing links. Example bands and band constructions are provided below in Section 12.

In the system **500**, an interchangeable band may allow for individual customization of the device or to better adapt the device for a range of uses or applications. In some instances, the type of band that is selected and installed can facilitate a particular user activity. For example, band **551***a-b* may be formed from a textile material and include a durable clasp that may be particularly well suited for exercise or outdoor activities. Alternatively, as discussed above the band **554***a-b* may be formed from a metallic material and include a thin or low-profile clasp that may be well suited for more formal or fashion-focused activities.

In some embodiments, the band may be coupled to a separate component having the mating feature **502**. The band may be coupled using pins, holes, adhesives, screws, and so on. In yet other embodiments, the band may be co-molded or overmolded with at least a portion of the component having the mating feature **502**. In some embodiments, the band is coupled to the component via a pin that allows the straps to rotate with respect to the component. The pin may be formed integrally with or disposed in a loop formed in the end of the band.

In the example system **500**, each of the bands is shown as having a generic band clasp. However, the type of band clasp that is used may vary between embodiments. On example band clasp may include a first band strap having a buckle or tang assembly which is configured to interface with a second band strap having a series of apertures or holes formed with the strap. Additionally or alternatively, the bands may include a magnetic clasp having one or more magnetic elements on a first band strap that is configured to mate to one or more magnetic or ferromagnetic elements on a second band strap.

As shown in FIG. **5**, the system may include multiple device bodies **515**, **525**, **535** that may vary in size, shape, and composition. The device body **515**, **525**, **535** may include one or more of the embodiments described herein and may include, but is not limited to a wearable computer, a wearable watch, a wearable communication device, a wearable media player, a wearable health monitoring device, and/or the like. In particular, the device body may correspond to the device body described with respect to device body **610** of device **100** (shown in FIG. **6**).

1. Example Wearable Electronic Device

FIG. **6** depicts an example wearable electronic device, which may include various aspects of the device(s) described above. In some embodiments, multiple modules or subsystems are physically and operationally integrated together to provide particular functionality or device features. In particular, the interaction between the subsystems, or the subsystems themselves, may be configurable by the user, manufacturer, or vendor to adapt the device to produce certain functionality. Some example combinations and interactions between the various modules and subsystems are expressly provided in the present description. However, the combinations and interactions provided herein are merely illustrative in nature and are not intended to be limiting on the scope of the disclosure.

FIG. **6** depicts an example configuration of a wearable electronic device **100**. In particular, FIG. **6** depicts an electronic wearable device **100** including a device body **610**

Masimo Ex. 1025
IPR Petition - US D947,842

that may be configured to be attached to the wrist of a user using a band assembly **620**. This configuration may also be referred to herein as a wearable device, a device, an electronic wristwatch, or an electronic watch. While these terms may be used with respect to certain embodiments, the functionality provided by the example electronic wearable device **100** may be substantially greater than or vary with respect to many traditional electronic watches or timekeeping devices.

In the present example, the exterior surface of the device body **610** is defined, in part, by the exterior surface of the housing **601** and the exterior surface of the cover **609**. In the example depicted in FIG. **6**, the device body **610** is substantially rectangular with round or curved side portions. The outer surfaces of the cover **609** and the housing **601** coincide at a joint interface and cooperate to form a continuous contoured surface. The continuous contoured surface may have a constant radius and may be tangent to a flat middle portion of the cover **609** and/or a flat bottom portion of the housing **601**. In some embodiments, the cover **609** has substantially the same shape as a flat bottom portion and at least a portion of the curved side portions of the housing **601**. A more complete description of the geometry of the cover **609** and the housing **601** is provided below with respect to FIGS. **7** and **8**.

In the example of FIG. **6**, the device **100** includes a display (item **120** of FIG. **2**) that is disposed at least partially within an opening or cavity defined within a top portion of the housing **601** of the device body **610**. The display may be formed from a liquid crystal display (LCD), organic light emitting diode (OLED) display, organic electroluminescence (OEL) display, or other type of display device. The display may be used to present visual information to the user and may be operated in accordance with one or more display modes or the software applications being executed on the device **100**. By way of example, the display may be configured to present the current time and date similar to a traditional watch or timepiece. The display may also present a variety of other visual information that may correspond to or be produced using one of the other modules in the device **100**. For example, the display may be configured to display one of a variety of notification messages, which may be generated based on data received from the one or more sensors, the wireless communication system, or other subsystem of the device **100**. The display may also be configured to present visual information or data that is based on the output of one or more sensor outputs. The display may also provide status or information related to a wireless charging process or battery power. The display may also present visual output or information related to media being produced using a speaker or acoustic module of the device **100**. Accordingly, a variety of other types of visual output or information may be presented using the display.

In the current example, the display includes or is integrated with a cover **609** that helps to protect the display from physical impact or scratches. In the field of wearable devices, the cover **609** may also be referred to generically as a crystal or cover glass, regardless of the material that is used to form the cover **609**. In some cases, the cover **609** is formed from a sheet or block of sapphire material. Sapphire may provide superior optical and surface hardness properties as compared to other materials. In some cases, the sapphire material has a hardness of approximately 9 on the Mohs scale. In alternative embodiments, the cover **609** is formed from a glass, polycarbonate, or other optically transparent material. The cover **609** may also be coated with one or more optical or mechanical enhancing materials or surface treatments. For example, interior and/or exterior surfaces of the cover **609** may be coated with an anti-reflective (AR), oleophobic or other coating to enhance the visible or functional properties of the display. Additionally, in some cases, the cover **609** may be configured to cooperate with an antenna used to facilitate wireless communication with an external device. FIGS. **21**A-B, described in more detail below, provide one example embodiment of a cover configured to cooperate with an antenna.

In the example depicted in FIG. **6**, the cover **609** is formed from a transparent material and, when assembled has an external surface and an internal surface. The cover **609** is disposed above the display and encloses a cavity or opening formed in the top portion of the housing **601**. In some embodiments, the external surface of the cover **609** cooperates with the external surface of the housing to form a substantially continuous external peripheral surface of the electronic device. As shown in FIG. **6**, the external surface of the cover **609** has a flat middle portion at the center of the cover, which extends outwardly. The cover **609** also includes a curved edge portion that emanates from and surrounds the flat middle portion and extends outwardly to an edge at the side of the cover **609**. In some embodiments, the cover **609** also includes an opaque mask disposed relative to the internal surface of the transparent cover. The opaque mask may correspond to or otherwise define the viewable area of the display **120**. The mask may have an outer boundary that is located proximate the edge of the side of the cover **609** and has an inner boundary located within the curved edge portion of the cover **609**.

As shown in FIG. **6**, the cover **609** is disposed relative to a top portion of the housing **601**. The housing **601** includes a top portion defining an opening, which is surrounded by a curved side portion. In the present example, the curved edge portion of the cover **609** coincides with the curved side portion of the housing **601** to form a continuous external surface of the electronic device **100**. In some instances, the cover **609** may have a contour that follows or otherwise corresponds to a similar contour of the housing **601** to form a substantially continuous surface at the interface between the two components. As shown in FIG. **6**, the cover **609** protrudes above the housing **601**.

In some instances, the cover **609** is disposed relative to a touch sensor (item **702** of FIG. **7**). In some embodiments, the touch sensor may be integrated with the display or other element of the device **100**. The touch sensor may be formed from one or more capacitive sensor electrodes or nodes that are configured to detect the presence and/or location of an object or the user's finger that is touching or nearly touching the surface of the display. In some cases, the touch sensor includes an array of sensing nodes formed in accordance with a mutual capacitance sensing scheme.

In one example, the touch sensor may include an array of mutual capacitance touch nodes that can be formed by a two-layer electrode structure separated by a dielectric material. One layer of electrodes may comprise a plurality of drive lines and another layer of electrodes may comprise a plurality of sense lines, and where the drive lines and the sense lines cross, mutual capacitive sense nodes are formed (also referred to as coupling capacitance). In some implementations, the drive lines and sense lines may cross over each other in different planes separated from one another by a dielectric. Alternatively, in other embodiments the drive lines and sense lines can be formed substantially on a single layer. An example touch sensor and touch-sensing node are described in more detail below with respect to FIGS. **14**A-C and **15**A-B.

Alternatively or additionally, the touch sensor may include one or more self-capacitive nodes or electrodes that are configured to detect a discharge of electrical current or charge when an object, such as a user's finger, contacts or nearly contacts a surface of the housing **601** or other surface of the device **100**. Other types of electronically sensing nodes, including resistive, inductive, or the like, may also be integrated into a surface of the device **100**.

In some embodiments, the device **100** may also include a force sensor (item **705** of FIG. **7**). The force sensor may be disposed relative to the display **120** or integrated with other elements of the device **100**. In some cases, the force sensor includes one or more force sensing structures or force-sensing nodes for detecting and measuring the magnitude of a force or pressure due to a touch on a surface of the device **100**. The force sensor may be formed from or implement one or more types of sensor configurations. For example, capacitive and/or strain based sensor configurations may be used alone or in combination to detect and measure the magnitude of a force or pressure due to a touch. As described in more detail below, a capacitive force sensor may be configured to detect the magnitude of a touch based on the displacement of a surface or element on the device. Additionally or alternatively, a strain-based force sensor may be configured to detect the magnitude of a touch based on the deflection. Example force sensor and force-sensing modules are described in more detail below with respect to FIGS. **9-12**.

As shown in FIG. **6**, the device **100** also includes device body **610** including a housing **601** that upon which may be mounted or integrated with various components of the device **100**. The housing **601** serves to surround at a peripheral region as well as support the internal components of the product in their assembled position. In some embodiments, the housing **601** may enclose and support internally various components (including for example integrated circuit chips and other circuitry) to provide computing and functional operations for the device **100**. The housing **601** may also help define the shape or form of the device. That is, the contour of the housing **601** may embody the outward physical appearance of the device. As such, it may include various ornamental and mechanical features that improve the aesthetical appearance and tactile feel of the device. For example, the housing **601** may include a contoured surface that includes rectilinear contours, curvilinear contours, or combinations thereof. The housing **601** may also include various surface features, including textures, patterns, decorative elements, and so on.

In the present example, the housing **601** is formed from a single piece, which may also be referred to as single-body, unitary, or uni-body design or construction. By utilizing a single-body construction, the structural integrity of the device may be improved as compared to a multi-piece construction. For example, a single body may be more easily sealed from contaminants as compared to a multi-piece enclosure. Additionally, a single-body enclosure may be more rigid due, in part, to the absence of joints or seams. The rigidity of the housing **601** may be further enhanced by increasing the material thickness in areas where mechanical stress may be greatest, while also maintaining or thinning other areas where mechanical stress may be lower or reduced. Variations in the thickness of the housing **601** may be possible by machining or casting the housing **601** as a single piece. Additionally, a single-body housing **601** may include one or more features for mounting or integrating the internal components of the device **100**, which may facilitate manufacturing and/or assembly of the device **100**.

An example housing **601** is described in more detail below with respect to FIG. **8**. The housing **601** may be formed from a variety of materials, including, without limitation plastic, glass, ceramics, fiber composites, metal (e.g., stainless steel, aluminum, magnesium), other suitable materials, or a combination of these materials. Further, the housing **601** may include a surface treatment or coating, which may be formed from a variety of materials, including, without limitation aluminum, steel, gold, silver and other metals, metal alloys, ceramics, wood, plastics, glasses, and the like.

As discussed above, the display, the touch sensor, and force sensor may be disposed within the housing **601**. In this example, one or more buttons **644** and a crown **642** used to receive user input may also be disposed within or relative to the housing **601**. Other types of user input, including for example, one or more dials, slides, or similar user input devices or mechanisms may also be disposed within or relative to the housing **601**. As described in more detail with respect to FIGS. **7** and **8**, the housing **601** may include various features for attaching and mounting the subassemblies and modules of the device **100**. In particular, the housing **601** may have one or more openings for receiving the cover **609**, the display, the force sensor, or other components. The housing **601** may also include one or more holes or openings for receiving the button **644** and crown **642** that are located around the perimeter of the device **100**. In some embodiments, the housing **601** also includes internal features, such as bosses and threaded portions, that can be used to attach modules or components within the housing **601**.

The device **100** may also include an ambient light sensor (ALS) that is configured to detect and measure changes in ambient lighting conditions. The ALS may include a photodiode and one or more optical elements or lenses for collecting light. An ALS may be located on an external facing surface that is less likely to be blocked when the device is worn or in use. The ALS may be used to adjust settings, including screen brightness and other visual output depending on the overall lighting conditions.

The housing **601** may also include one or more motion-sensing elements or devices for detecting motion of the device **100**. For example, the device **100** may include one or more accelerometers that are configured to sense acceleration or changes in motion. Additionally or alternatively, the device **100** may include one or more gyroscopic sensors that are configured to detect changes in direction. In some cases, the one or more gyroscopic sensors may include a spinning mass that can be used to detect changes in angular velocity. Multiple motion-sensing elements may be used to detect motion along multiple directions or axes. The motion sensors may also be used to identify motion gestures. For example, the motion sensors can be used to detect an arm raise or the position of a user's body (within a predetermined confidence level of certainty). The one or more motion-sensing elements may be used to determine an orientation of the device relative to a known or fixed datum. For example, the device may include a compass and/or global positioning system (GPS) that can be used to identify an absolute position. The one or more motion sensing elements may then measure deviation or movement with respect to the absolute position to track movement of the device or the user wearing the device. In some implementations, the one or more motion-sensing elements are used to detect gross movement of the device or user. The gross movement may be used as

Masimo Ex. 1025
IPR Petition - US D947,842

a pedometer or activity meter, which may be tracked over time and used to calculate a health metric or other health-related information.

Described in more detail with respect to FIG. **8**, the housing **601** may also include one or more openings or orifices coupled to an acoustic module or speaker **122**, which may include a speaker and/or a microphone subassembly. Although the housing **601** may include one or more openings or orifices, the housing **601** may still be substantially waterproof/water resistant and may be substantially impermeable to liquids. For example, the opening or orifice in the housing or enclosure may include a membrane or mesh that is substantially impermeable to liquid ingress. Additionally or alternatively, the geometry of the opening or orifice and other internal features of the housing **601** may be configured to reduce or impede the ingress of liquid or moisture into the device **100**. In one example, the opening is formed from one or more orifices that are offset with respect to an internal acoustic chamber or cavity, which may prevent a direct path from the outside of the housing **601** into the acoustic module.

As shown in FIG. **6**, the device **100** includes a device body **610** that may be attached to a user's wrist using a band **620**. In the present example, the band **620** include a first band strap **621** attached to a first receiving feature **623** and a second band strap **622** attached to a second receiving feature **624**. In some embodiments, the first and second band straps **621**, **622** include a lug feature that is configured to attach to the first and second receiving features **623**, **624**, respectively. As shown in FIG. **6**, the free ends of the band straps **621**, **622** are connected with a clasp **625**.

The band straps **621**, **622** are formed from a flexible or compliant material that may be specially configured for a particular application. The band straps **621**, **622** may be formed from a variety of materials, including, for example, leather, woven textiles, or metallic mesh materials. The material and construction of the band straps **621**, **622** may depend on the application. For example, the band straps **621**, **622** may be formed from a woven textile material configured for exposure to impact and moisture typically associated with outdoor activities. In another example, the band straps **621**, **622** may be formed from a metallic mesh material that may be configured to have a fine finish and construction that may be more appropriate for professional or social activities.

Similarly, the clasp **625** of the band **620** may be configured for a particular application or to work with a particular style of band. For example, if the band straps **621**, **622** are formed from a metallic mesh material, the clasp **625** may include a magnetic clasp mechanism. In the present example, the device **100** is configured to be attached to the wrist of a user. However, in alternative embodiments, the device may be configured to be attached to the arm, leg or other body part of the user.

The housing **601** includes one or more features for attaching the band straps **621**, **622**. In the present example, the housing **601** includes a first receiving feature **623** and a second receiving feature **624** for attaching the first band strap **621** and the second band strap **622**, respectively. In this example, the band straps **621**, **622** include a lug portion that is adapted to mechanically engage with the receiving features **623**, **624**. A more detailed description of the receiving features and lugs is provided below with respect to FIGS. **25**A-C. As shown in FIG. **6**, the first **623** and second receiving features **624** may be integrally formed into the housing **601**. In alternative embodiments, the receiving features may be formed from separate parts and may be attached to the housing **601** during manufacturing. In some embodiments, the receiving features **623**, **624** may be configured to release the band straps **621**, **622** from the device body **610** (e.g., the housing **601**). For example, one or both of the receiving features **623**, **624** may include a button or slide, which may be actuated by the user to release a corresponding band strap **621** and **622**. One advantage of a releasable lug is that the user can swap between a variety of bands that may be specially configured for a particular use scenario. For example, some bands may be specially configured for sport or athletic activities and other bands may be configured for more formal or professional activities.

The device **100** may also include a rear cover **608** located on the rear-facing surface of the housing **601** of the device body **610**. The rear cover **608** may improve the strength and/or scratch resistance of the surface of the device **100**. For example, in some embodiments, the rear cover **608** may be formed from a sapphire sheet, zirconia, or alumina material having superior scratch resistance and surface finish qualities. In some cases, the sapphire material has a hardness greater than 6 on the Mohs scale. In some cases, the sapphire material has a hardness of approximately 9 on the Mohs scale. Due to the superior strength of the sapphire material, a cover glass formed from a sapphire sheet may be very thin. For example, the thickness of a sapphire cover sheet may be less 300 microns thick. In some cases, the thickness of a sapphire cover sheet may be less than 100 microns thick. In some cases, the thickness of a sapphire cover sheet may be less than 50 microns thick. In some embodiments, the rear cover **608** is contoured in shape. For example, the rear cover **608** may have a convex curved surface.

FIG. **7** depicts an example exploded view of various modules and subassemblies of the device **100**. As shown in FIG. **7**, multiple components are configured to be disposed within and/or attached to the housing **601**. The exploded view provided in FIG. **7** depicts one example arrangement of the components of the device **100**. However, in other embodiments, arrangement, placement, and/or grouping of the subassemblies and the components of the subassemblies may vary.

In the present example, a main cavity of the housing **601** houses an electronics subassembly **720** and the battery **114** of the device. The electronics subassembly **720** includes one or more electrical circuit assemblies for coupling the various electrical components of the device **100** to each other and to power supplied by the battery **114**. The electronics subassembly **720** may also include structural elements or components that provide structural rigidity for the electronics subassembly **720** and/or structural mounting or support for other components disposed within the housing **601**. As shown in FIG. **7**, within the cavity of the housing **601**, the speaker **122**, the crown module **642**, and the battery **114** are all disposed above the electronics subassembly **720**. In the present embodiment the top surface of the speaker **122**, the crown module **642**, and the battery **114** have a substantially similar height. In some embodiments, the speaker **122**, the crown module **642**, and the battery **114**, when assembled in the housing **601**, define an area for the display **120** within the cavity. Thus, as shown in FIG. **7**, the display **120** may overlay the speaker **122**, the crown module **642**, and the battery **114**, which overlay the electronics subassembly **720**.

As shown in FIG. **7**, the cover **609** is configured to fit within a corresponding recess formed within the housing **601**. In particular, the cover **609** includes a vertical portion having a height that corresponds to the depth of the recess formed within the housing **601**. In this example, the device **100** includes a force sensor **705** disposed between the housing **601** and a cover subassembly **704**. As described in

more detail below with respect to FIGS. **9** and **10**A-B, the force sensor **705** may be configured to detect a force placed on a surface of the cover **609** by detecting a relative deflection between the cover **609** (or cover subassembly **704**) and the housing **601**. In the present example, the force sensor **705** also forms a gasket or seal between the cover subassembly **704** and the housing **601**. In some implementations, the seal is a water-proof or water-resistant seal that helps to prevent water or liquid ingress into the internal cavity of the housing **601**. The force sensor **705** may also be used to join the cover subassembly **704** to the housing **601** using an adhesive or film.

In some embodiments, the cover subassembly **704** includes the cover **609** which is disposed above the touch sensor **702** and display **120**. In the present example, the touch sensor **702** and the display **120** are attached to each other by an optically clear adhesive layer (OCA). Similarly, an OCA layer is used to attach the touch sensor **702** to the cover **609**. Other adhesives or bonding techniques may be used to attach the display **120** and the touch sensor **702** to the cover **609**. In some embodiments, the touch sensor **702** is integrated into the display **120** and the display **120** (and integrated touch sensor **702**) are attached to the cover **609**.

As shown in FIG. **7**, the speaker **122** is also disposed within the cavity of the housing **601**. The speaker **122** is adapted to mechanically and acoustically interface with a port formed in the side of the housing **601**. In some embodiments, the port is configured to prevent a direct path for water or liquid into an acoustic chamber or cavity of the speaker **122**. In some embodiments, the device **100** also includes a microphone that is similarly coupled to another port formed in the side of the housing **601**. A more detailed description of the speaker **122** and microphone is provided below with respect to the acoustic module of FIG. **20**.

In the present example, the haptic device **112** is also disposed within the cavity of the housing **601** proximate to the speaker **122**. In some embodiments, the haptic device **112** is rigidly mounted to a portion of the housing **601**. A rigid mounting between the housing **601** and the haptic device **112** may facilitate the transmission of vibrations or other energy produced by the haptic device **112** to the user. In the present example, the haptic device **112** includes a moving mass that is configured to oscillate or translate in a direction that is substantially parallel with a rear face of the housing **601**. In some implementations, this orientation facilitates the perception of a haptic output produced by the haptic device **112** by a user wearing the device **100**. While this configuration is provided as one example, in other implementations, the haptic device **112** may be placed in a different orientation or may be configured to produce a haptic response using a rotating mass or other type of moving mass.

As shown in FIG. **7**, the device also includes an antenna subassembly **722**. In this example, a portion of the antenna subassembly **722** is disposed within the housing **601** and a portion of the antenna subassembly **722** is disposed within the cover assembly. In some implementations, a portion of the antenna subassembly **722** is disposed relative to a feature formed within the cover **609**. An example embodiment is described in more detail below with respect to FIGS. **21**A-B.

In the example depicted in FIG. **7**, the device **100** also includes a crown module **642** which is disposed in an aperture or hole in the housing **601**. When installed, a portion of the crown module **642** is located outside of the housing **601** and a portion of the crown module **642** is disposed within the housing **601**. The crown module **642** may be configured to mechanically and/or electrically cooperate with the electronics subassembly **720**. A more detailed description of an example crown module is provided below with respect to FIGS. **23** and **24**A-B. The housing **601** also includes a button **644**, which is disposed in an opening of the housing **601** and may be configured to mechanically and/or electrically cooperate with the electronics subassembly **720**.

In the example depicted in FIG. **7**, a biosensor module **710** is disposed in an opening formed in the rear surface of the housing **601**. In some embodiments, the biosensor module **710** includes the rear cover **608** and may also include a chassis or plate that facilitates attachment of the biosensor module **710** to the housing **601**. The chassis or plate or the cover sheet **608** may also include features or elements that facilitate a watertight seal between the biosensor module **710** and the housing **601**. For example, the rear cover **608** may include a shelf or flange that may be used to form a seal between the biosensor module **710** and the housing **601**. As described in more detail below with respect to FIG. **16**, the biosensor module **710** may include one or more light sources, one or more photodetectors, and one or more electrodes or conductive elements that are configured to detect and measure a physiological condition or property of the user.

In some embodiments, the rear cover **608** has an edge that protrudes outwardly from the back surface of the housing **601**. The rear cover **608** may also have a convex curved area located between the edges of the rear cover **608**. The convex curved area of the rear cover **608** may include one or more windows or apertures that provide operational access to one or more internal components located within the housing **601**. In some embodiments, the windows have a curvature that matches the curvature of the convex curved area of the rear cover.

2. Example Housing

As described above, a wearable electronic device may include a device body that includes a housing or enclosure shell. As previously described, the housing may function as a chassis that physically integrates the various components of the device. The housing may also form a protective shell or housing for the components and function as a barrier against moisture or debris. In the present examples, the housing is formed as a uni-body, unitary, or single body or component. A single-body construction may be advantageous by providing mounting features directly into the housing, which may reduce space, reduce part count, and increase structural rigidity as compared to some alternative configurations. Additionally, a single-body construction may improve the housing's ability to prevent the ingress of moisture or debris by reducing or eliminating seams or joints between external components.

FIG. **8** depicts an example housing **601** in accordance with some embodiments. In the present example, the housing **601** is formed as a single body or component. As shown in FIG. **8**, the housing **601** is formed as a single part or body. The housing **601** may be formed, for example, by machining or shaping a solid or cast blank having the approximate shape of the housing **601**. In some implementations, the housing **601** may be configured to provide structural integrity for potentially delicate internal components and also withstand a reasonable impact.

In the present embodiment, the housing **601** is formed as a uni-body, unitary, or single-body construction having a flat bottom portion **801** and a top portion including flange **812**. The top portion defines an internal cavity **805**, which is surrounded by four sides **802***a-d* that are integrally formed with the bottom portion **801**. The internal cavity **805** can also be described as being defined by the top portion, the four

sides **802***a-d* and the bottom portion **801**. In this example, the internal cavity **805** has a rectangular (square) shape, although the specific shape may vary with different implementations. In the present example, the four sides **802***a-d* define a curved side portion of the housing **601** that extends from the bottom portion **801** to the top portion of the housing **601**. Each side **802***a-d* is orthogonal to an adjacent side and each side **802***a-d* is connected to an adjacent side by a rounded corner. For example, side **802***a* is orthogonal to two adjacent sides **802***b* and **802***d* and is connected to those sides by respective rounded corners. The shape or contour of the rounded corners may correspond to the curvature of the curved portion of the housing **601**. Specifically, the curvature of the rounded corners may match or correspond to the curvature of the continuous external surface formed by the housing **601** and the cover **609**, as described above with respect to FIG. **6**.

The sides **802***a-d* may vary in thickness in order to provide the structural rigidity for the device. In general, areas of high stress may have an increased material thickness as compared to areas of low stress, which may have a reduced material thickness. In particular, portions of the sides **802***a-d* near the bottom portion **801** may have an increased thickness as compared to portions of the sides **802***a-d* located further away from the bottom portion **801**. This configuration may improve the structural rigidity and overall stiffness of the housing **601**.

As shown in FIG. **8**, one or more mounting features may be formed directly into the housing **601**, which may reduce the number of parts and also enhance the structural integrity of the device. As shown in FIG. **8**, receiving features **623**, **624** may be formed as channels or openings that are configured to receive an end of a band (e.g., a lug) having a mating feature. As described above with respect to FIG. **5**, the receiving features **623**, **624** may be standardized and configured to work with a system of interchangeable components. Forming the receiving features **623**, **624** directly into the housing **601** may reduce parts and also facilitate structural rigidity of the device.

In the example depicted in FIG. **8**, the housing **601** can be described as having two ends (a first end and a second end opposite the first end), and a first side and a second side opposite the first side, the sides being continuous with the ends. In this example, the first and second ends and the first and second sides having an outwardly curved three-dimensional shape. In this example, the receiving feature **623** is formed from a first groove situated in the first end. Similarly, the receiving feature **624** is formed from a second groove situated in the second end. In the present example the grooves have openings at the interface of the first and second sides and first and second ends. As shown in FIG. **8** the groove also has an inwardly curved concave three-dimensional shape with an undercut feature. For example, the middle portion of the groove of receiving features **623**, **624** may have a width that is greater than the opening of the receiving features **623**, **624**. In some embodiments, the upper portion of the housing overhangs the lower portion of the housing at the groove opening. In the example depicted in FIG. **8**, the groove is cut into a solid portion of the housing such that the groove forms a continuous interior shape.

The geometry of the receiving features may be located with respect to other features or components of the device. In the example depicted in FIG. **8**, at least a portion of the groove of the receiving features **623**, **624** may be disposed underneath the cover (item **609** of FIGS. **6-7**). With respect to FIG. **6**, the groove of the receiving features **623**, **624** is located underneath the opening for the cover, which is defined by the sealing ledge **810** and flange **812** formed in the upper portion of the housing **601**. In some embodiments, the length of the groove extends further than the width of the opening configured to receive the cover (and thus the cover, when assembled). In some embodiments, the grooves are formed at an angle relative to the centerline of the housing. In some cases, the angle is approximately 5 degrees. In some embodiments, the groove is located underneath the centerline of the housing **601**. In some embodiments, the groove is angled upward toward the top of the housing **601** and inward toward the center of the housing **601**. The groove may angle upward and cross the centerline of the housing. In some cases, the groove crosses the vertical centerline of the housing **601**.

In the present embodiment, the housing **601** also includes an aperture **821** formed into the side **802***c* of the housing **601** for attaching a crown or crown module (item **642** of FIGS. **6-7**). In some embodiments, the aperture **821** for the crown is offset upwardly from the centerline of the housing **601**. In some embodiments, the aperture **821** for the crown is positioned such that an upper portion of a crown (when installed) is higher than the interface of cover **609** and housing **601**. With respect to FIG. **6**, the interface may correspond to the upper edge of the flange **812**.

The housing **601** also includes an opening **822** formed into the side **802***c* of the housing **601** for attaching the button (item **644** of FIGS. **6-7**). In some embodiments, the aperture **821** for the crown and the opening **822** for the button are disposed with the length defined by a flat part of the cover. In some embodiments, the aperture **821** for the crown is disposed above the centerline of the housing **601** and the opening **822** for the button is disposed below the centerline of the housing **601**. In some embodiments, the aperture **821** for the crown and the opening **822** for the button are disposed on a curved surface of the housing **601**. The housing **601** may also include various other internal features, including threaded features and bosses, for attaching other internal components of the device.

In some cases, the housing **601** may be formed as a single-piece or integral enclosure shell to enhance the structural rigidity and/or liquid-sealing properties of the device. As described above with respect to FIGS. **6** and **7**, the housing **601** may be integrated with a cover (e.g., crystal) and other external components to provide a substantially sealed housing. In the present embodiment, the housing **601**, includes a sealing ledge **810** formed around the perimeter of the main cavity **805** formed within the housing **601**. In some embodiments, the sealing ledge **810** (and thus the cover when installed) is located in the center of the housing **601**. The sealing ledge **810** may be defined by a substantially flat portion **811** that is adapted to form a seal between the housing **601** and another component (e.g., the force sensor **705** or cover **609** of FIGS. **6-7**). The sealing ledge **810** may be formed at a depth that is substantially similar or corresponds to the thickness of the mating cover.

As shown in FIG. **8**, the sealing ledge **810** may also include flange **812** that protrudes from the flat portion and forms a continuous surface with the side walls **802***a-d*. In some cases, the flange **812** is configured to cooperate with the cover (item **609** of FIGS. **6-7**) to form a substantially continuous surface. In some implementations, the sides **802***a-d* and the cover or crystal are configured to cooperate or mechanically interface to improve the strength and the water sealing properties of the device.

As also shown in FIG. **8**, an opening or aperture **815** may be formed in the bottom portion **801** of the housing **601**. In some embodiments, the opening or aperture **815** is located

at the center of the housing **601**. As described above with respect to FIG. **7**, the aperture **815** may be used to integrate a sensor array or other module used to collect measurements that may be used to compute a health metric or other health-related information. The present embodiment may be advantageous by integrating multiple components in a single opening **815**, which may facilitate a water-proof or water-resistant property of the device. Additionally, by integrating a sensor array into a module that attaches via the opening **815**, same housing **601** may be used with a variety of sensing configurations or arrays. For example, the number or sensors or components may be increased or decreased without modifying the housing **601**. This may allow for flexibility in the product development and may facilitate upgrades as new sensing configurations are available.

As previously discussed above with respect to FIGS. **6-7**, the housing **601** may also be configured to serve as a protective housing for one or more acoustic elements, such as a microphone or speaker. Additionally, in some embodiments, the housing **601** may also be configured to inhibit the ingress of foreign particulate or moisture. In particular, the housing **601** may include a speaker port having orifices **831**, **832** that are configured to transmit acoustic signals but also prevent the ingress of liquid or other foreign particulate. In the present example, the speaker port includes orifices **831**, **832** that are offset with respect to an acoustic chamber or cavity to prevent the direct ingress of liquid into the speaker subassembly or acoustic module. In the present example, a shielding or umbrella portion of the housing, which is substantially free of openings, is formed between the orifices **831**, **832**, which helps to prevent the direct ingress of liquid. Similarly, the housing **601** includes a microphone port having orifices **833**, **834** that are offset from a corresponding acoustic chamber or cavity to prevent the direct ingress of liquid into the microphone subassembly or acoustic module.

In the example depicted in FIG. **8**, the orifices **831**, **832** of the speaker port are located on one side of the aperture **821** for the crown and the orifices **833**, **834** for the microphone are located on the other side of the aperture **821**. Both the orifices **831**, **832** of the speaker port and the orifices **833**, **834** for the microphone are located on a curved portion of the housing **601**.

3. Example Force Sensor and Touch Sensor

As discussed previously, a wearable electronic device may include one or more sensors for detecting the location and force of a touch. For the purposes of the following description of the force sensor and touch sensor, the described device **100** is one example of that shown and discussed above with respect to FIGS. **2-7**. However, certain features of the device **100** including the external surface geometry, may be simplified or vary with respect to aspects of the device **100** discussed above.

In some embodiments, a force sensor and a touch sensor may be disposed relative to the display of a wearable electronic device for to form a touch-sensitive surface. The following description is provided with respect to individual force and touch sensors that may be used to determine the force and location of a touch, respectively. However, in some embodiments, a single integrated sensor may be used to detect both the force and location of a touch on the device.

In one embodiment, an output from a force sensor may be combined with a touch sensor to provide both location and force of a single touch or of multiple touches on the surface of a device. In an alternative embodiment, a hybrid or integrated force and touch sensor may be used to sense both touch force and location of a single touch or of multiple touches. In either embodiment, by sensing both the force and location of a touch, multiple types of user input may be generated and interpreted. In one example, a first touch may be correlated with a first force and a first touch location or gesture. Based on the magnitude of the force, the first touch may be interpreted as a first type of input or command. A second touch may be sensed as having a second, different force and a similar location or gesture as the first touch. Based in part on the magnitude of the second force, the second touch may be interpreted as a second type of input or command. Thus, a force sensor (alone or in combination with another touch sensor) may be used to produce different responses or outputs depending on the force of the touch.

The one or more force sensors may be formed from or may be implemented as one or more types of sensor configurations. For example, capacitive and/or strain based sensor configurations may be used alone or in combination to detect and measure the magnitude of a touch. As described in more detail below, a capacitive force sensor may be configured to detect the magnitude of a touch based on the displacement of a surface or element on the device. Additionally or alternatively, a strain-based force sensor may be configured to detect the magnitude of a touch based on a deflection of the surface, such as the cover glass.

By way of example, the force sensor may include a capacitive force sensor, which may be formed from one or more capacitive plates or conductive electrodes that are separated by a compressible element or other compliant member. As a force is applied to a surface of the device, the compressible element may deflect resulting in a predictable change in the capacitance between the plates or electrodes. In some implementations, a capacitive force sensor may be formed from transparent materials and disposed over the display. In other implementations, a capacitive force sensor may be formed from non-transparent materials and disposed beneath or around the perimeter of a display.

FIG. **9** depicts a detail cross-sectional view of a portion of a force sensor **900** that may be arranged around the perimeter of a display **120**. As shown in FIG. **9**, a force-sensing structure **901** of the force sensor **900** may be disposed beneath the cover **609** and along the side of an edge or the perimeter of the display **120**. In this example, the force sensor **900** is configured to detect and measure the force of a touch on the surface **911** of the cover **609**. In the present embodiment, a first capacitive plate **902** is fixed with respect to the cover **609**. A second, lower capacitive plate **904** is fixed with respect to the housing **601** and may be disposed on a shelf or mounting surface located along the perimeter of the device. The first capacitive plate **902** and the second capacitive plate **904** are separated by a compressible element **906**.

In the configuration depicted in FIG. **9**, a touch on the surface **911** of the device may cause a force to be transmitted through the cover **609** of the device and to the force sensor **900**. In some cases, the force causes the compressible element **906** to compress, thereby bringing the first capacitive plate **902** and the second capacitive plate **904** closer together. The change in distance between the first and second capacitive plates **902**, **904** may result in a change of capacitance, which may be detected and measured. For example, in some cases, a force-sensing circuit may measure this change in capacitance and output a signal that corresponds to the measurement. A processor, integrated circuit or other electronic element may correlate the circuit output to an estimate of the force of the touch. Although the term "plate" may be used to describe certain elements, such as the capacitive plates or conductive electrodes, it should be

Masimo Ex. 1025
IPR Petition - US D947,842

appreciated that the elements need not be rigid but may instead be flexible (as in the case of a trace or flex).

FIG. **10**A depicts an example configuration of the force sensor **1000** having four individual force-sensing structures **1001***a-d* arranged around the perimeter of a display in a device. For the sake of clarity, the crystal, display, and other elements of the device are omitted from the depiction of FIG. **10**A. Each of the force-sensing structures **1001***a-d* may be formed from a pair of capacitive plates separated by a compressible element. Additionally, each force-sensing structure **1001***a-d* may be separated by a small gap at or near the corners of the opening in the housing **601**. In the example depicted in FIG. **10**A, the four individual force-sensing structures **1001***a-d* may each be operatively coupled to force-sensing circuitry that is configured to detect a change in the capacitance of each force-sensing structure **1001***a-d*. Using the example arrangement depicted in FIG. **10**A, the approximate location of the touch may be determined by comparing the relative change in capacitance of each force-sensing structure **1001***a-d*. For example, a change in capacitance of structure **1001***b* that is larger as compared to a change in capacitance of structure **1001***d* may indicate that the touch is closer to structure **1001***b*. In some embodiments, the degree of the difference in the change in capacitance may be used to provide a more accurate location estimate.

While the configuration shown in FIG. **10**A depicts the force-sensing structures as individual elements separated by a small gap, in some embodiments, the force-sensing structure may be formed as a single continuous piece. FIG. **10**B depicts a force sensor **1050** formed as a single force-sensing structure **1051** formed as a continuous part along the perimeter of the display. Similar to the example described above, the force-sensing structure **1051** may be operatively coupled to force sensing circuitry that is configured to detect a change in the capacitance of one or more capacitive elements of the force-sensing structure **1051**. While the force-sensing structure **1051** is formed as a continuous structure, there may be multiple sensing elements (e.g., capacitive plates) that are disposed within the structure at different locations, and which may be configured to detect deflection or compression of the structure over a portion of entire area of the force-sensing structure **1051**. In some embodiments, the force-sensing structure **1051** may also function as a seal or gasket to prevent ingress of moisture or other foreign contaminants into the main cavity of the housing. Additionally, the force-sensing structure **1051** may be integrated with one or more sealing or adhesive layers that also function as a barrier for foreign contaminants.

As mentioned previously, the force sensor may additionally or alternatively include a strain-based sensing configuration. The strain-based sensing configuration may include, for example, a charge-based or resistive sensor configuration. FIG. **11** depicts a cross-sectional view of a device having an example force sensor **1100** that uses one or more force-sensitive films to detect and measure the force of a touch on a surface **1111** of the cover **609**. In this example, the force sensitive film **1102** and **1104** are formed from a transparent material and are disposed relative to a viewable portion of the display **120**. As shown in FIG. **11**, the force sensor **1100** includes a first force-sensitive film **1102** and a second force-sensitive film **1104** that are separated by one or more intermediate layers **1106**. The force-sensitive films **1102**, **1104** may be configured to produce different electrical outputs in response to a strain or deflection of the cover **609**. In some cases, the intermediate layer **1106** is compressible to allow the first force-sensitive film **1102** to deflect with respect to the second force-sensitive film **1104**. In other cases, the intermediate layer **1106** may not be compressible and the first force-sensitive film **1102** deflects in a predictable manner with respect to the second force-sensitive film **1104**. While FIG. **11** depicts an example force sensor **1100** having two force-sensitive films, alternative embodiments may include only a single force-sensitive film or, alternatively, include more than two force-sensitive films.

In general, a transparent force-sensitive film may include a compliant material that exhibits an electrical property that is variable in response to deformation or deflection of the film. The transparent force-sensitive film may be formed from a piezoelectric, piezo-resistive, resistive, or other strain-sensitive materials. Transparent resistive films can be formed by coating a substrate with a transparent conductive material. Potential transparent conductive materials include, for example, polyethyleneioxythiophene (PEDOT), indium tin oxide (ITO), carbon nanotubes, graphene, silver nanowire, other metallic nanowires, and the like. Potential substrate materials include, for example, glass or transparent polymers like polyethylene terephthalate (PET) or cyclo-olefin polymer (COP). Typically, when a piezo-resistive or resistive film is strained, the resistance of the film changes as a function of the strain. The resistance can be measured with an electrical circuit. In this way, a transparent piezo-resistive or resistive film can be used in a similar fashion as a strain gauge.

If transparency is not required, then other film materials may be used, including, for example, Constantan and Karma alloys for the conductive film and a polyimide may be used as a substrate. Nontransparent applications include force sensing on track pads or the back of display elements. In general, transparent and non-transparent force-sensitive films may be referred to herein as "force-sensitive films" or simply "films."

In some embodiments, the force-sensitive film is patterned into an array of lines, pixels, or other geometric elements herein referred to as film elements. The regions of the force-sensitive film or the film elements may also be connected to sense circuitry using electrically conductive traces or electrodes. FIG. **12** depicts a cross-sectional view a device having a strain-based force sensor **1200** formed from one or more strain pixel elements **1202** and **1204** separated by intermediate layer **1206**. Each of the pixel elements **1202**, **1204** may be separated by a gap **1210**. In the present example, each pixel element **1202**, **1204** may exhibit a measurable change in an electrical property in response to a force being applied to the device. By way of example, as a force is applied to a surface **1211** on the cover **609**, one or more of the pixel elements **1202**, **1204** is deflected or deformed. Sense circuitry, which is in electrical communication with the one or more pixel elements **1202**, **1204**, may be configured to detect and measure the change in the electrical property of the film due to the deflection. Based on the measured electrical property of the pixel elements **1202**, **1204**, an estimated amount of force can be computed. In some cases, the estimated force may represent the magnitude of a touch on the surface **1211** of the device, and be used as an input to a graphical user interface or other element of the device. Additionally, in some embodiments, the relative strain of the individual pixel elements may be compared to estimate a location of the touch. While FIG. **12** depicts an example force sensor **1200** having two layers of pixel elements, alternative embodiments may include only a single layer of pixel elements or, alternatively, include more than two layers of pixel elements.

The pixel elements **1202**, **1204** may be specifically configured to detect strain along one or more directions. In some

Masimo Ex. 1025
IPR Petition - US D947,842

cases, each pixel element **1202**, **1204** includes an array of traces generally oriented along one direction. This configuration may be referred to as a piezo-resistive or resistive strain gauge configuration. In general, in this configuration the force-sensitive-film is a material whose resistance changes in response to strain. The change in resistance may be due to a change in the geometry resulting from the applied strain. For example, an increase in length combined with decrease in cross-sectional area may occur in accordance with Poisson's effect. The change in resistance may also be due to a change in the inherent resistivity of the material due to the applied strain. For example, the applied strain may make it easier or harder for electrons to transition through the material. The overall effect is for the total resistance to change with strain due to the applied force.

Further, in a piezo-resistive or resistive strain gauge configuration, each pixel may be formed from a pattern of the force-sensitive-film, aligned to respond to strain along a particular axis. For example, if strain along an x-axis is to be measured, the pixel should have a majority of its trace length aligned with the x-axis. By way of example, FIG. **13**A depicts a pixel element **1302** having traces that are generally oriented along the x-axis and may be configured to produce a strain response that is substantially isolated to strain in the x-direction. Similarly, FIG. **13**B depicts a pixel element **1304** having traces that are generally oriented along the y-axis and may be configured to produce a strain response that is substantially isolated to strain in the y-direction.

In some embodiments, the force-sensitive film may be formed from a solid sheet of material and is in electrical communication with a pattern of electrodes disposed on one or more surfaces of the force-sensitive film. The electrodes may be used, for example, to electrically connect a region of the solid sheet of material to sense circuitry. This configuration may be referred to as a piezo-strain configuration. In this configuration, the force-sensitive film may generate a charge when strained. The force-sensitive film may also generate different amounts of charge depending on the degree of the strain. In some cases, the overall total charge is a superposition of the charge generated due to strain along various axes.

As mentioned previously, a force sensor may be combined with a touch sensor that is configured to detect and measure the location of a touch on the surface of the device. FIG. **14**A depicts a simplified schematic representation of an example mutual capacitance touch sensor. As shown in FIG. **14**A, a touch sensor **1430** may be formed by an array of nodes **1402** formed at the intersection of an array of drive lines **1404** and sense lines **1406**. In this example, stray capacitance C_{stray} may be present at each node **1402** (although FIG. **14**A depicts only one C_{stray} for one column for purposes of simplifying the figure). In the example of FIG. **14**A, AC stimuli V_{stim} **1414**, V_{stim} **1415** and V_{stim} **1417** can be at different frequencies and phases. Each stimulation signal on a row can cause a charge $Q_{sig}=C_{sig}\times V_{stim}$ to be injected into the columns through the mutual capacitance present at the affected nodes **1402**. A change in the injected charge (Q_{sig_sense}) can be detected when a finger, palm or other object is present at one or more of the affected nodes **1402**. V_{stim} signals **1414**, **1415** and **1417** can include one or more bursts of sine waves. Note that although FIG. **14**A illustrates rows **1404** and columns **1406** as being substantially perpendicular, they need not be aligned, as described above. Each column **1406** may be operatively coupled to a receive channel of a charge-monitoring circuit.

FIG. **14**B depicts a side view of an exemplary node in a steady-state (no touch) condition according to examples of the disclosure. In FIG. **14**B, electric field lines **1408** between a column **1406** and a row **1404** separated by dielectric **1410** is shown at node **1402**.

FIG. **14**C depicts a side view of an exemplary pixel in a dynamic (touch) condition. An object such as finger **1412** can be placed near node **1402**. Finger **1412** can be a low-impedance object at signal frequencies, and can have an AC capacitance C_{finger} from the column trace **1406** to the body. The body can have a self-capacitance to ground C_{body} of about 200 pF, where C_{body} can be much larger than C_{finger}. If finger **1412** blocks some electric field lines **1408** between row and column electrodes (those fringing fields that exit the dielectric **1410** and pass through the air above the row electrode), those electric field lines can be shunted to ground through the capacitance path inherent in the finger and the body, and as a result, the steady state signal capacitance C_{sig} can be reduced by DC_{sig}. In other words, the combined body and finger capacitance can act to reduce C_{sig} by an amount DC_{sig} (which can also be referred to herein as C_{sig_sense}), and can act as a shunt or dynamic return path to ground, blocking some of the electric field lines as resulting in a reduced net signal capacitance. The signal capacitance at the pixel becomes $C_{sig}-DC_{sig}$, where DC_{sig} represents the dynamic (touch) component. Note that $C_{sig}-DC_{sig}$ may always be nonzero due to the inability of a finger, palm or other object to block all electric fields, especially those electric fields that remain entirely within the dielectric material. In addition, it should be understood that as finger **1412** is pushed harder or more completely onto the touch sensor, finger **1412** can tend to flatten, blocking more and more of the electric fields lines **1408**, and thus DC_{sig} may be variable and representative of how completely finger **1412** is pushing down on the panel (i.e., a range from "no-touch" to "full-touch").

Additionally or alternatively, the touch sensor may be formed from an array of self-capacitive pixels or electrodes. FIG. **15**A depicts an example touch sensor circuit corresponding to a self-capacitance touch pixel electrode and sensing circuit. Touch sensor circuit **1509** can have a touch pixel electrode **1502** with an inherent self-capacitance to ground associated with it, and also an additional self-capacitance to ground that can be formed when an object, such as finger **1512**, is in proximity to or touching the touch pixel electrode **1502**. The total self-capacitance to ground of touch pixel electrode **1502** can be illustrated as capacitance **1504**. Touch pixel electrode **1502** can be coupled to sensing circuit **1514**. Sensing circuit **1514** can include an operational amplifier **1508**, feedback resistor **1516**, feedback capacitor **1510** and an input voltage source **1506**, although other configurations can be employed. For example, feedback resistor **1516** can be replaced by a switch capacitor resistor. Touch pixel electrode **1502** can be coupled to the inverting input of operational amplifier **1508**. An AC input voltage source **1506** can be coupled to the non-inverting input of operational amplifier **1508**. Touch sensor circuit **1509** can be configured to sense changes in the total self-capacitance **1504** of touch pixel electrode **1502** induced by finger **1512** either touching or in proximity to the touch sensor panel. Output **1520** can be used by a processor to determine a presence of a proximity or touch event, or the output can be inputted into a discreet logic network to determine the presence of a touch or proximity event.

FIG. **15**B depicts an example self-capacitance touch sensor **1530**. Touch sensor **1530** can include a plurality of touch pixel electrodes **1502** disposed on a surface and coupled to sense channels in a touch controller, can be driven by stimulation signals from the sense channels through drive/sense interface **1525**, and can be sensed by the sense

channels through the drive/sense interface **1525** as well. After touch controller has determined an amount of touch detected at each touch pixel electrode **1502**, the pattern of touch pixels in the touch screen panel at which touch occurred can be thought of as an "image" of touch (e.g., a pattern of fingers touching the touch screen). The arrangement of the touch pixel electrodes **1502** in FIG. **15**B is provided as one example; however, the arrangement and/or the geometry of the touch pixel electrodes may vary depending on the embodiment.

As previously mentioned, a force sensor may be implemented alone or in combination with another type of touch sensor to sense both touch force and touch location, which may enable more sophisticated user touch input than using touch location alone. For example, a user may manipulate a computer-generated object on a display using a first type of interaction using a relatively light touch force at a given touch location. The user may also interact with the object using a second type of interaction by using a relatively heavy or sharper touch force at the given location. As one specific example, a user may manipulate or move a computer-generated object, such as a window, using a relatively light touch force. Additionally or alternatively, the user may also select or invoke a command associated with the window using a relatively heavy or sharper touch force. In some cases, multiple types of interactions may be associated with multiple amounts of touch force.

Additionally, it may be advantageous for the user to be able to provide an analog input using a varying amount of force. A variable, non-binary input may be useful for selecting within a range of input values. The amount of force may, in some cases, be used to accelerate a scrolling operation, a zooming operation, or other graphical user interface operation. It may also be advantageous to use the touch force in a multi-touch sensing environment. In one example, the force of a touch may be used to interpret a complex user input performed using multiple touches, each touch having a different magnitude or degree of force. As a specific but non-limiting example, touch and force may be used in a multi-touch application that allows the user to play a varying tone or simple musical instrument using the surface of the device. In such a housing, the force of each touch may be used to interpret a user's interaction with the buttons or keys of a virtual instrument. Similarly, the force of multiple touches can be used to interpret a user's multiple touches in a game application that may accept multiple non-binary inputs at different locations.

4. Sensor or Biosensor Module

As described above with respect to FIG. **2**, a wearable electronic device may include one or more sensors that can be used to calculate a health metric or other health-related information. For the purposes of the following description of the biosensor module, the described device **100** is one example of that shown and discussed above with respect to FIGS. **2-7**. However, certain features of the device **100** including the external surface geometry, may be simplified or vary with respect to aspects of the device **100** discussed above.

In some embodiments, a wearable electronic device may function as a wearable health assistant that provides health-related information (whether real-time or not) to the user, authorized third parties, and/or an associated monitoring device. The wearable health assistant may be configured to provide health-related information or data such as, but not limited to, heart rate data, blood pressure data, temperature data, blood oxygen saturation level data, diet/nutrition information, medical reminders, health-related tips or information, or other health-related data. The associated monitoring device may be, for example, a tablet computing device, phone, personal digital assistant, computer, and the like.

In accordance with some embodiments, the electronic device can be configured in the form of a wearable electronic device that is configured or configurable to provide a wide range of functionality. As described above with respect to FIG. **2**, the wearable electronic device **100** may include a processing units **102** coupled with or in communication with a memory **104**, one or more communications channels **108**, output devices such as a display **120** and speaker **122**, one or more input components **106**, and other modules or components. An example wearable electronic device **100** may be configured to provide or calculate information regarding time, health information, biostatistics, and/or status to externally connected or communicating devices and/or software executing on such devices. The device **100** may also be configured to send and receive messages, video, operating commands, and other communications.

With reference to FIG. **16**, an example device **100** may include various sensors for measuring and collecting data that may be used to calculate a health metric or other health-related information. As one example, the wearable communication device can include an array of light sources **1611-1613** and a detector **1614** that are configured to function as an optical sensor or sensors. In one example, an optical sensor or sensors may implemented as a pairing of one or more light sources **1611-1613** and the detector **1614**. In one example implementation, the detector **1614** is configured to collect light and convert the collected light into an electrical sensor signal that corresponds to the amount of light incident on a surface of the detector **1614**. In one embodiment, the detector may be a photodetector, such as a photodiode. In other embodiments, the detector **1614** may include a phototube, photosensor, or other light-sensitive device.

In some cases, the one or more optical sensors may operate as a photoplethysmography (PPG) sensor or sensors. In some instances, a PPG sensor is configured to measure light and produce a sensor signal that can be used to estimate changes in the volume of a part of a user's body. In general, as light from the one or more light sources passes through the user's skin and into the underlying tissue, some light is reflected, some is scattered, and some light is absorbed, depending on what the light encounters. The light that is received by the detector **1614** may be used to generate a sensor signal, which may be used to estimate or compute a health metric or other physiological phenomena.

The light sources may operate at the same light wavelength range, or the light sources can operate at different light wavelength ranges. As one example, with two light sources, one light source may transmit light in the visible wavelength range while the other light source can emit light in the infrared wavelength range. In some cases, a modulation pattern or sequence may be used to turn the light sources on and off and sample or sense the reflected light. With reference to FIG. **16**, the first light source **1611** may include, for example, a green LED, which may be adapted for detecting blood perfusion in the body of the wearer. The second light source **1612** may include, for example, an infrared LED, which may be adapted to detect changes in water content or other properties of the body. The third **1613** light source may be a similar type or different types of LED element, depending on the sensing configuration.

The optical (e.g., PPG) sensor or sensors may be used to compute various health metrics, including, without limitation, a heart rate, a respiration rate, blood oxygenation level,

a blood volume estimate, blood pressure, or a combination thereof. In some instances, blood may absorb light more than surrounding tissue, so less reflected light will be sensed by the detector of the PPG sensor when more blood is present. The user's blood volume increases and decreases with each heartbeat. Thus, in some cases, a PPG sensor may be configured to detect changes in blood volume based on the reflected light, and one or more physiological parameters of the user may be determined by analyzing the reflected light. Example physiological parameters include, but are not limited to, heart rate, respiration rate, blood hydration, oxygen saturation, blood pressure, perfusion, and others.

While FIG. **16** depicts one example embodiment, the number of light sources and/or detectors may vary in different embodiments. For example, another embodiment may use more than one detector. Another embodiment may also use fewer or more light sources than are depicted in the example of FIG. **16**. In particular, in the example depicted in FIG. **16**, the detector **1614** is shared between multiple light sources **1611-1613**. In one alternative embodiment, two detectors may be paired with two corresponding light sources to form two optical sensors. The two sensors (light source/detector pairs) may be operated in tandem and used to improve the reliability of the sensing operation. For example, output of the two detectors may be used to detect a pulse wave of fluid (e.g., blood) as it passes beneath the respective detectors. Having two sensor readings taken at different locations along the pulse wave may allow the device to compensate for noise created by, for example, movement of the user, stray light, and other effects.

In some implementation, one or more of the light sources **1611-1613** and the detector **1614** may also be used for optical data transfer with a base or other device. For example, the detector **1614** may be configured to detect light produced by an external mating device, which may be interpreted or translated into a digital signal. Similarly, one or more of the light sources **1611-1613** may be configured to transmit light that may be interpreted or translated into a digital signal by an external device.

Returning to FIG. **16**, the device **100** may also include one or more electrodes to measure electrical properties of the user's body. In this example, a first electrode **1601** and second electrode **1602** are disposed on the rear face of the device **100**. The first **1601** and second **1602** electrodes may be configured to make contact with the skin of the user's wrist when the device is being worn. As shown in FIG. **16**, a third electrode **1603** and fourth electrode **1604** may be disposed along a periphery of the device body **610**. In the configuration of FIG. **16**, the third **1603** and fourth **1604** electrodes are configured to come into contact with the skin of the user's other hand (that is not wearing the device **100**). For example, the third **1603** and fourth **1604** electrodes may be contacted when the user pinches the device **100** between two digits (e.g., a forefinger and thumb).

FIG. **16** depicts one example arrangement of electrodes. However, in other embodiments, one or more of the electrodes may be placed in locations that are different than the configuration of FIG. **16**. For example, one or more electrodes may be placed on a top surface or other surface of the device **100**. Additionally, fewer electrodes or more electrodes may be used to contact the user's skin, depending on the configuration.

Using the electrodes of the device, various electrical measurements may be taken, which may be used to compute a health metric or other health-related information. By way of example, the electrodes may be used to detect electrical activity of the user's body. In some cases, the electrodes may be configured to detect electrical activity produced by the heart of the user to measure heart function or produce an electrocardiograph (ECG). As another example, the electrodes of the device may be used to detect and measure conductance of the body. In some cases, the measured conductance may be used to compute a galvanic skin response (GSR), which may be indicative of the user's emotional state or other physiological condition. By way of further example, the electrodes may also be configured to measure other health characteristics, including, for example, a body fat estimate, body or blood hydration, and blood pressure.

In some embodiments, the optical sensors and electrodes discussed above with respect to FIG. **16** may be operatively coupled to sensing circuitry and the processing units **102** to define a health monitoring system. In this capacity, the processing units **102** may be any suitable type of processing device. In one embodiment, the processing units **102** include a digital signal processor. The processing units **102** may receive signals from the optical sensor(s) and/or electrodes and process the signals to correlate the signal values with a physiological parameter of the user. As one example, the processing units **102** can apply one or more demodulation operations to the signals received from the optical sensor. Additionally, the processing units **102** may control the modulation (i.e., turning on and off) of the light sources according to a given modulation pattern or sequence. The processing units **102** may also be used to calculate one or more biometrics or other heath related information.

In some implementations, the wearable electronic device may also receive sensor data or output from an external device. For example, an external mobile device having a global positioning system (GPS) may relay location information to the wearable device, which may be used to calibrate an activity metric, such as a pedometer or distance calculator. Similarly, sensor output of the wearable electronic device may be transmitted to an external device to compute health-related information. For example, output from an accelerometer in the wearable electronic device may be used determine a body position or gesture, which may be relayed to an external device and used to compute health-related information, such as activity level.

In some embodiments, some or all of the biosensors may be integrated into a module that is separate from and attached to the housing **601** of the device **100**. As described above with respect to FIG. **6**, in some embodiments, the biosensors are disposed relative to or attached to a rear cover **608** that is formed from an optically transparent material and is configured to be positioned with the opening of the housing **601**. In some embodiments, the rear cover **608** is disposed completely within the area of the cover so that the two components completely overlap when viewed from above. In some embodiments, the rear cover **608** has an edge that protrudes outwardly from the back surface of the housing **601**. In some embodiments, an edge of the rear cover **608** extends past a flat portion of the back surface of the housing **601**. The rear cover **608** may also have a convex, curved outer contour. The rear cover **608** may have a convex shape that is located within the center and surrounded by the edges of the rear cover **608**. The convex curved area of the rear cover **608** may include one or more windows or apertures that provide operational access to one or more internal components located within the housing. For example, the rear cover **608** may include an array of windows, each window including an aperture or opening for a respective light source **1611-1613** and/or the detector **1614**. In some embodiments, the windows have a curvature

that matches the curvature of the convex curved area of the rear cover **608**. In some embodiments, rear cover **608** includes a chamfered edge and a curved bottom surface, the windows being disposed within the curved surface. In some embodiments, two openings of the rear cover **608** are located along a first axis (e.g., an x-axis) and two openings are located along a second axis (e.g., a y-axis) that is transverse to the first axis.

5. Example Wireless Communications with External Devices

A wearable electronic device may include a functionality for performing wireless communications with an external device. For the purposes of the following description, the described device **100** is one example of that shown and discussed above with respect to FIGS. **2-7**. However, certain features of the device **100**, including the external surface geometry, may be simplified or vary with respect to aspects of the device **100** discussed above.

In some embodiments, the wireless communications are performed in accordance with a Near Field Communications (NFC) protocol. The communication may include an identification protocol and a secured data connection that can be used to identify the user, authorize activity, perform transactions, or conduct other aspects of electronic commerce.

FIG. **17** depicts an example system **1700** including a device **100** that is located proximate to a station **1710**. The station **1710** may include a variety of devices, including, without limitation, a payment kiosk, a vending machine, a security access point, a terminal device, or other similar device. In some cases, the station **1710** is incorporated into a larger system or device. For example, the station **1710** may be incorporated into a security gate of a building or a payment center for a vending system.

As shown in FIG. **17**, the device **100** is a wearable electronic device that may be placed proximate to the station **1710**. In this example, a second device **1720** is carried by a user, and may also be placed proximate to the station **1710**. In some embodiments, the device **100** and/or the second device **1720** includes a radio-frequency identification (RFID) system that is configured to enable one-way or two-way radio-frequency (RF) communications with the station **1710**. The one- or two-way communication may include an identification of the device **100** and the station **1710** to initiate a secured data connection between the two devices. The secured data connection may be used to authorize a transaction between the user and an entity that is associated with the station **1710**.

In some embodiments, the user may initiate a communication with the station **1710** by placing the device **100** near an active region on the station **1710**. In some implementations, the station **1710** is configured to automatically detect the presence of the device **100** and initiate an identification process or routine. The RFID system of the device may include a unique identifier or signature that may be used to authenticate the identity of the user. As previously mentioned, the identification process or routine may be used to establish a secure data connection between the device **100** and the station **1710**. The secure data connection may be used to authorize a purchase or download of data to or from the device **100**. In some cases, the secure data connection may be used to authorize the transfer of funds from a credit card or financial institution in exchange for a product that is associated with the station **1710**. Other transactions or forms of electronic commerce may also be performed using the wireless communication between the device **100** and the station **1710**.

6. Example Wireless Power System

As discussed above, a wearable electronic device may include an internal battery that is rechargeable using an external power source. For the purposes of the following description, the described device **100** is one example of that shown and discussed above with respect to FIGS. **2-7**. However, certain features of the device **100**, including the external surface geometry, may be simplified or vary with respect to aspects of the device **100** discussed above.

One challenge associated with small devices is that it may be difficult to incorporate an electrical port for coupling the device to an external power source. Because wearable electronic devices have limited space for an external connector, it may be advantageous to electrically couple to a device without a cable or external connector. In at least some embodiments, the wearable electronic device described herein may be configured to operate as a receiver in a wireless power transfer system.

A wireless power transfer system, one example of which is an inductive power transfer system, typically includes a power-transmitting structure to transmit power and a power-receiving structure to receive power. In some examples, a power-receiving electronic device includes or otherwise incorporates an inductive power-receiving element configured to receive wireless power and/or charge one or more internal batteries. Similarly, a charging device may include or otherwise incorporate an indicative power-transmitting element configured to wirelessly transmit power to the power-receiving electronic device. The charging device may be configured as a base or dock on which the power-receiving electronic device rests or to which it physically connects in some embodiments. In other embodiments, the charging device may be proximate the electronic device but not necessarily touching or physically coupled.

In many examples, the battery-powered electronic device may be positioned on an external surface of the power-transmitting device, otherwise referred to as a dock. In these systems, an electromagnetic coil within the dock (e.g., transmit coil) may produce a time-varying electromagnetic flux to induce a current within an electromagnetic coil within the electronic device (e.g., receive coil). In many examples, the transmit coil may transmit power at a selected frequency or band of frequencies. In one example the transmit frequency is substantially fixed, although this is not required. For example, the transmit frequency may be adjusted to improve inductive power transfer efficiency for particular operational conditions. More particularly, a high transmit frequency may be selected if more power is required by the electronic device and a low transmit frequency may be selected if less power is required by the electronic device. In other examples, a transmit coil may produce a static electromagnetic field and may physically move, shift, or otherwise change its position to produce a spatially-varying electromagnetic flux to induce a current within the receive coil.

The electronic device may use the received current to replenish the charge of a rechargeable battery or to provide power to operating components associated with the electronic device. Thus, when the electronic device is positioned on the dock, the dock may wirelessly transmit power at a particular frequency via the transmit coil to the receive coil of the electronic device.

A transmit coil and receive coil may be disposed respectively within housings of the dock and electronic device so as to align along a mutual axis when the electronic device is placed on the dock. If misaligned, the power transfer efficiency between the transmit coil and the receive coil may

decrease as misalignment increases. Accordingly, in many examples, the wireless power transfer system may include one or more alignment assistance features to effect alignment of the transmit and receive coils along the mutual axis.

FIG. **18** depicts a front perspective view of an example wireless power transfer system **1800** in an unmated configuration. The illustrated embodiment shows an inductive power transmitter dock **1802** that is configured to couple to and wirelessly transmit power to an inductive power receiver accessory, in this case device **100**. The wireless power transfer system **1800** may include one or more alignment assistance features to effect alignment of the device **100** with the dock **1802** along a mutual axis. For example, the housings of the dock **1802** and the device **100** may assist with alignment. In one implementation, a portion of the housing of the device **100** may engage and/or interlock with a portion of the housing of the dock **1802** in order to effect the desired alignment. In some embodiments, a bottom portion of the device **100** may be substantially convex and a top surface of the dock **1802** may be substantially concave. In other examples, the interfacing surfaces of the dock **1802** and the device **100** may be substantially flat, or may include one or more additional housing features to assist with effecting mutual alignment.

In some embodiments, one or more actuators in the dock **1802** and/or device **100** can be used to align the transmitter and receiver devices. In yet another example, alignment assistance features, such as protrusions and corresponding indentations in the housings of the transmitter and receiver devices, may be used to align the transmitter and receiver devices. The design or configuration of the interface surfaces, one or more alignment assistance mechanisms, and one or more alignment features can be used individually or in various combinations thereof.

Alignment assistance can also be provided with one or more magnetic field sources. For example, a permanent magnet within the dock **1802** may attract a permanent magnet within the device **100**. In another example, a permanent magnet within the device **100** may be attracted by a magnetic field produced by the dock **1802**. In further examples, multiple alignment assistance features may cooperate to effect alignment of the transmit and receive coils. Power transfer efficiency may also decrease if the power consumption of the electronic device changes (e.g., the electronic device transitions from a trickle charge mode to constant current charge mode) during wireless power transfer.

As discussed previously with respect to FIG. **2**, the device **100** may include a processor coupled with or in communication with a memory, one or more communication interfaces, output devices such as displays and speakers, and one or more input devices such as buttons, dials, microphones, or touch-based interfaces. The communication interface(s) can provide electronic communications between the communications device and any external communication network, device or platform, such as, but not limited to, wireless interfaces, Bluetooth interfaces, Near Field Communication interfaces, infrared interfaces, USB interfaces, Wi-Fi interfaces, TCP/IP interfaces, network communications interfaces, or any conventional communication interfaces. The device **100** may provide information regarding time, health, statuses or externally connected or communicating devices and/or software executing on such devices, messages, video, operating commands, and so forth (and may receive any of the foregoing from an external device), in addition to communications.

In the example depicted in FIG. **18**, the dock **1802** may be connected to an external power source, such as an alternating current power outlet, by power cord **1808**. In other embodiments, the dock **1802** may be battery operated. In still further examples, the dock **1802** may include a power cord **1808** in addition to an internal or external battery. Similarly, although the embodiment is shown with the power cord **1808** coupled to the housing of the dock **1802**, the power cord **1808** may be connected by any suitable means. For example, the power cord **1808** may be removable and may include a connector that is sized to fit within an aperture or receptacle opened within the housing of the dock **1802**.

Although the device **100** is shown in FIG. **18** as larger than the dock **1802**, the depicted scale may not be representative of all embodiments. For example, in some embodiments the dock **1802** may be larger than the device **100**. In still further embodiments the two may be substantially the same size and shape. In other embodiments, the dock **1802** and device **100** may take separate shapes.

FIG. **19** depicts a simplified block diagram of relevant aspects of the device **100** and dock **1802**. It may be appreciated that certain components of both the dock **1802** and device **100** are omitted from the figure for clarity. Likewise, the positions of the elements that are shown are meant to be illustrative rather than necessarily portraying a particular size, shape, scale, position, orientation, or relation to one another, although some embodiments may have elements with one or more of such factors as illustrated.

As described previously with respect to FIG. **2**, the device **100** may include one or more electronic components located within the housing **601**. For clarity, some of the components and modules described or depicted in various embodiments are omitted from the depiction of FIG. **19**. As shown in FIG. **19**, the device **100** may include an internal battery **114** that may be used to provide power to the various internal components of the device **100**. As described previously, the internal battery **114** may be rechargeable by an external power supply. In the present example, the internal battery **114** is operably connected to a receive coil **1869** via power conditioning circuit **1810**.

In the present example, the device **100** includes a receive coil **1869** having one or more windings for inductively coupling with a transmit coil **1832** of the dock **1802**. The receive coil **1869** may receive power wirelessly from the dock **1802** and may pass the received power to a battery **114** within the device **100** via power conditioning circuit **1810**. The power conditioning circuit **1810** may be configured to convert the alternating current received by the receive coil **1869** into direct current power for use by other components of the device. In one example, the processing units **102** may direct the power, via one or more routing circuits, to perform or coordinate one or more functions of the device **100** typically powered by the battery **114**.

As shown in FIG. **19**, the dock **1802** includes a transmit coil **1832** having one or more windings. The transmit coil **1832** may transmit power to the device **100** via electromagnetic induction or magnetic resonance. In many embodiments, the transmit coil **1832** may be shielded with a shield element that may be disposed or formed around portions of the transmit coil **1832**. Similarly, the receive coil **1869** may also include a shield element that may be disposed or formed around a portion of the receive coil **1869**.

As shown in FIG. **19**, the dock **1802** also includes a processor **1834** that may be used to control the operation of or coordinate one or more functions of the dock **1802**. In some embodiments, the dock **1802** may also include one or more sensors **1836** to determine whether the device **100** is

Masimo Ex. 1025
IPR Petition - US D947,842

present and ready to receive transmitted power from the dock **1802**. For example, the dock **1802** may include an optical sensor, such as an infrared proximity sensor. When the device **100** is placed on the dock **1802**, the infrared proximity sensor may produce a signal that the processor **1834** uses to determine the presence of the device **100**. The processor **1834** may, optionally, use another method or structure to verify the presence of the electronic device via sensor **1836**. Examples of different sensors that may be suitable to detect or verify the presence of device **100** may include a mass sensor, a mechanical interlock, switch, button or the like, a Hall effect sensor, or other electronic sensor. Continuing the example, after the optical sensor reports that the device **100** may be present, the processor **1834** may activate a communication channel to attempt to communicate with the device **100**.

As illustrated in FIG. **19**, a bottom surface of the housing of the device **100** may partially contact a top surface of the dock housing. In some implementations, the interfacing surfaces of the device **100** and the dock **1802** may be formed with complementary geometries. For example, as depicted in FIG. **19**, the bottom surface of the device **100** is convex and the top surface of the dock **1802** is concave, following the same curvature as the bottom surface of the device **100**. In this manner, the complementary geometries may facilitate alignment of the electronic device and dock for efficient wireless power transfer.

In some embodiments, the dock **1802** and device **100** may include other alignment assistance features. For example the device **100** may include an alignment magnet **1838** which is positioned and oriented to attract a corresponding alignment magnet **1840** within the dock **1802**. In some cases, when the device **100** is positioned proximate the dock **1802**, the alignment magnets **1838**, **1840** may be mutually attracted, thereby affecting alignment of the portable electronic device **100** and the dock **1802** along a mutual axis. In other examples, the dock **1802** may include a ferromagnetic material in place of the alignment magnet **1840**. In these examples, the alignment magnet **1838** may be attracted to the ferromagnetic material. In still further cases, the receive coil **1869** or transmit coil **1832** may produce a static magnetic field that either attracts or repels either or both of the alignment magnets **1838**, **1840**.

As shown in FIG. **19**, the alignment magnets **1838**, **1840** may be positioned within a respective coil **1869**, **1832**. When the alignment magnets **1838**, **1840** are drawn together, the coils **1869**, **1832** may be placed into alignment. Additionally, the complementary geometries of the device **100** and the dock **1802** may further facilitate alignment when the alignment magnets **1838**, **1840** are drawn together.

7. Example Acoustic Module

As described above, the device may include one or more devices for transmitting and receiving acoustic energy. For the purposes of the following description of the acoustic module, the described device **100** is one example of that shown and discussed above with respect to FIGS. **2-7**. However, certain features of the device **100**, including the external surface geometry, may be simplified or vary with respect to aspects of the device **100** discussed above. As previously discussed, in some embodiments, the device may include a speaker for transmitting acoustic energy and/or a microphone for receiving acoustic energy. For the purposes of the following description, a speaker device and a microphone are referred to generically as an acoustic module, which may be configured to transmit and/or receive acoustic energy depending on the particular implementation.

FIG. **20** depicts a simplified schematic cross-sectional view of a first embodiment of a device having an acoustic module **2006**. The representation depicted in FIG. **20** is not drawn to scale and may omit some elements for clarity. The acoustic module **2006** may represent either a portion of a speaker and/or microphone device described above with respect to the electronic device **100** of FIG. **2**.

As shown in FIG. **20**, an acoustic port **2020** may be formed in the housing **601** of the electronic device. In the present example, the acoustic port **2020** includes first and second orifices **2031**, **2032** that are formed in the housing **601** and acoustically couple the acoustic cavity **2011** of the acoustic module **2006** to the external environment (external to the electronic device). In the present embodiment, the first and second orifices **2031**, **2032** are offset with respect to the opening of the acoustic cavity **2011**. This configuration may help reduce the direct ingress of liquid **2001** into acoustic cavity **2011** of the acoustic module **2006** Also, as shown in FIG. **20** a shield **2021** or umbrella structure that is formed between the orifices **2031**, **2032** blocks the direct ingress of liquid **2001** into the acoustic cavity **2011**. As shown in FIG. **20**, the acoustic module **2006** also includes a screen element **2015** disposed at one end of the acoustic cavity **2011**, which may also prevent the ingress of liquid or other foreign debris into the acoustic cavity **2011**. The acoustic module **2006** also includes a seal **2016** disposed between the housing **601** and the connector element **2012** of the module, which may also be configured to prevent the ingress of water into the device and/or module.

In the present example depicted in FIG. **20**, the acoustic module **2006** may correspond to the speaker **122** described with respect to some embodiments. As shown in FIG. **20**, the acoustic module **2006** includes various components for producing and transmitting sound, including a diaphragm **2010**, a voice coil **2009**, a center magnet **2008**, and side magnets/coils **2007**. These components may cooperate to form a speaker acoustic element. In one implementation, the diaphragm **2010** is configured to produce sound waves or an acoustic signal in response to a stimulus signal in the center magnet **2008**. For example, a modulated stimulus signal in the center magnet **2008** causes movement of the voice coil **2009**, which is coupled to the diaphragm **2010**. Movement of the diaphragm **2010** creates the sound waves, which propagate through the acoustic cavity **2011** of acoustic module **2006** and eventually out the acoustic port **2020** to a region external to the device. In some cases, the acoustic cavity **2011** functions as an acoustical resonator having a shape and size that is configured to amplify and/or dampen sound waves produced by movement of the diaphragm **2010**.

As shown in FIG. **20**, the acoustic module **2006** also includes a yoke **2014**, support **2013**, connector element **2012**, and a cavity wall **2017**. These elements provide the physical support of the speaker elements. Additionally, the connector element **2012** and the cavity wall **2017** together form at least part of the acoustic cavity **2011**. The specific structural configuration of FIG. **20** is not intended to be limiting. For example, in alternative embodiments, the acoustic cavity may be formed from additional components or may be formed from a single component.

The acoustic module **2006** depicted in FIG. **20** is provided as one example of a type of speaker acoustic module. In other alternative implementations, the acoustic module may include different acoustic elements for producing and transmitting sound, including, for example, a vibrating membrane, piezoelectric transducer, vibrating ribbon, or the like. Additionally, in other alternative implementations, the

acoustic module may be a microphone acoustic module having one or more elements for converting acoustic energy into an electrical impulse. For example, the acoustic module may alternatively include a piezoelectric microphone acoustic element for producing a charge in response to acoustic energy or sound.

As previously mentioned, because the acoustic port **2020** connects the acoustic module **2006** to the external environment, there is a possibility that liquid may accumulate or infiltrate the interior of the module. In some cases, the screen element **2015** or other protective features may not prevent all liquid from entering the acoustic cavity **2011** of the module. For example, if the device is subjected to a liquid under pressure or a directed stream of liquid, some liquid ingress may occur. Additionally, naturally occurring moisture in the air may condense and accumulate over time resulting in the presence of liquid within the module. Thus, in some implementations, the acoustic module **2006** may include one or more elements configured to expel water or liquid that accumulates in, for example, the acoustic cavity **2011** of the module. The liquid expulsion process may include modifying the charge on a portion of the wall of the acoustic cavity **2011** to change the surface energy of the wall and/or producing an acoustic pulse using the diaphragm **2010** to help expel liquid from the acoustic cavity **2011**. In some embodiments, the screen **2015** may also have hydrophilic or hydrophobic properties that may facilitate removal of liquid held within the acoustic cavity **2011**.

8. Example Antenna and Cover

As previously described, a wearable electronic device may be configured to communicate wirelessly with various external devices and communication networks. For the purposes of the following description, the described device **100** is one example of that shown and discussed above with respect to FIGS. **2-7**. However, certain features of the device **100**, including the external surface geometry, may be simplified or vary with respect to aspects of the device **100** discussed above.

In some embodiments, as previously discussed with respect to FIG. **2**, the device may include one or more communication channels that are configured to transmit and receive data and/or signals over a wireless communications network or interface. Example wireless interfaces include radio frequency cellular interfaces, Bluetooth interfaces, Wi-Fi interfaces, or any other known communication interface.

In some implementations an antenna may be disposed with respect to the cover (e.g., crystal) of a device to facilitate wireless communications with an external device or communication network. In some cases, it may be advantageous to integrate an antenna into the cover to improve the transmission and reception of wireless signals from the device. In particular, the cover of the device may have dielectric properties that facilitate the transmission of radio frequency signals while also protecting the antenna from physical damage or interference. Additionally, if the antenna is integrated into a perimeter portion of the cover, the visual appearance or clarity of the cover may be minimized. Furthermore, the embodiments described below with respect to FIGS. **21**A-B may be used to integrate an antenna external to the housing, without increasing the thickness of the device body.

FIG. **21**A depicts a perspective exploded view of a cover **2100** and an antenna assembly **2130**. The cover **2100** depicted in FIG. **21**A is viewed from an inner surface **2124** that is configured to attach to or interface with the opening of the housing (described above with respect to FIG. **1**). As shown in FIG. **21**A, a groove **2128** may be formed within the inner surface **2124**. In this example, the groove **2128** is formed around the periphery of the cover **2100**. As mentioned previously, this may be advantageous in minimizing the visual impact of having the antenna assembly **2130** located within the cover **2100**.

As shown in FIG. **21**A the antenna assembly **2130** includes an antenna ring **2134** and a terminal **2140** which may interface with an electrical connector **2150**. In the present embodiment, the groove **2128** formed in the surface of the cover **2100** may be configured to accept the antenna ring **2134**. In particular, the groove **2128** may receive the entire antenna ring **2134** without a portion of the antenna ring **2134** protruding past the inner surface **2124**, when the antenna ring **2134** is installed. In some cases, the groove **2128** is formed to be a clearance or near clearance fit with the diameter of the antenna ring **2134**. Thus, in some cases, the antenna ring **2134** may substantially fill the groove **2128** when the ring is installed. In some cases, the groove **2128** may be configured to retain the antenna ring **2134** due to a slight interference fit or due to a feature formed within either the cover **2100** and/or the antenna assembly **2130**. In the present embodiment, the antenna assembly **2130** may be installed in the cover **2100** and then connected to other electronics via the terminal **2140** and the connector **2150**, which may protrude into an opening in the case or housing.

FIG. **21**B depicts a cross-sectional view of the cover and antenna at the connection point. In particular, FIG. **21**B depicts a detail cross-sectional view of the cover **2100** installed within the housing **601** at a region near the terminal **2140**. In this example, the cover **2100** is attached to a shelf of the housing **601** via a compressible element **2122**. The compressible element **2122** may provide a seal against water or other contaminates and also provide compliance between the cover **2100** and the housing **601**. The compressible element **2122** may be formed from a nitrile or silicone rubber and may also include an adhesive or other bonding agent.

As shown in FIG. **21**B, the antenna ring **2134** is disposed entirely within the groove **2128**. In this case, the antenna ring **2134** does not protrude past the inner surface **2124**. The antenna ring **2134** is electrically connected to the terminal **2140**, which protrudes into an opening in the housing **601**. As shown in FIG. **21**B, the terminal **2140** includes conductive pads **2142** for electrically connecting to the antenna ring **2134**. In this example, spring clips **2152** are configured to mechanically and electrically connect to the conductive pads **2142** on the terminal **2140**. One advantage to the configuration depicted in FIG. **21**B is that the antenna assembly **2130** may be installed in the cover **2100** before the cover **2100** is installed in the housing **601**. The terminal **2140** and connector **2150** facilitate a blind connection that may assist electrical connection as the cover **2100** is installed. Additionally, the configuration depicted in FIG. **21**B may allow for some movement between the cover **2100** and the housing **601** without disturbing the electrical connection with the antenna ring **2134**.

9. Example Haptic Module

As described above, the device may include one or more haptic modules for providing haptic feedback to the user. The embodiments described herein may relate to or take the form of durable and thin haptic feedback elements suitable to provide a perceivable single pulse haptic feedback. In general, a haptic device may be configured to produce a mechanical movement or vibration that may be transmitted through the housing and/or other component of the device. In some cases, the movement or vibration may be transmit-

ted to the skin of the user and perceived as a stimulus or haptic feedback by the user. In some implementations, the haptic feedback may be coupled to one or more device outputs to alert the user of an event or activity. For example, a haptic output may be produced in combination with an audio output produced by the speaker, and/or a visual output produced using the display.

The space constraints associated with a small wrist-worn device may present unique challenges to integrating a haptic mechanism into wearable electronics. In particular, a haptic mechanism may use a moving mass used to create the movement or vibration of the haptic output. The larger the mass that is moved, the easier it may be to create a perceivable stimulus using the haptic mechanism. However, a large moving mass and the supporting mechanism may be difficult to integrate into the compact space of, for example, the housing of a wearable electronic wristwatch.

Thus, the haptic module implemented in some embodiments may be configured to maximize the mechanical energy that is produced in a very compact form factor. FIGS. **22**A-B depict one example haptic mechanism that may be particularly well suited for use in a wearable electronic device. While the embodiment described with respect to FIGS. **22**A-B is provided as one example, the haptic module is not limited to this particular configuration.

FIG. **22**A depicts a three-quarters perspective view of a haptic device **112**, with a top, front and left sidewall of the housing **2220** removed to expose internal components. FIG. **22**B depicts a cross-sectional perspective view of the haptic device **112** cut in half to expose the internal components. In this example, a coil **2200** is used to induce movement of a frame **2260**, which houses a central magnet array **2210**. As shown in FIGS. **22**A-B, the movement of the frame **2260** is guided by a shaft **2250** that is fixed with respect to a housing **2220**.

In the present example, the coil **2200** may be energized by transmitting a current (e.g., from the battery) along a length of a wire that forms the coil **2200**. A direction of the current along the wire of the coil **2200** determines a direction of a magnetic field that emanates from the coil **2200**. In turn, the direction of the magnetic field determines a direction of movement of the frame **2260** housing the central magnet array **2210**. One or more springs may bias the frame **2260** towards the middle region of the travel. In this example, the frame **2260** and central magnet array **2210**, through operation of the coil **2200**, function as a moving mass, which generates a tap or vibration. The output of the haptic device **112**, created by the moving mass of the frame **2260** and central magnet array **2210**, may be perceived as a haptic feedback or stimulus to the user wearing the device.

For example, when the coil **2200** is energized, the coil **2200** may generate a magnetic field. The opposing polarities of the magnets in the magnet array **2210** generates a radial magnetic field that interacts with the magnetic field of the coil **2200**. The Lorentz force resulting from the interaction of the magnetic fields causes the frame **2260** to move along the shaft **2250** in a first direction. Reversing current flow through the coil **2200** reverses the Lorentz force. As a result, the magnetic field or force on the central magnet array **2210** is also reversed and the frame **2260** may move in a second direction. Thus, frame **2260** may move in both directions along the shaft **2250**, depending on the direction of current flow through the coil **2200**.

As shown in FIG. **22**A, the coil **2200** encircles the central magnet array **2210**, which is disposed near the center of the frame **2260**. As previously described, the coil **2200** may be energized by transmitting a current along the length of the wire forming the coil **2200**, and the direction of the current flow determines the direction of the magnetic flux emanating from the coil **2200** in response to the current. Passing an alternating current through the coil **2200** may cause the central magnet array **2210** (and frame **2260**) to move back and forth along a shaft **2250**. In order to prevent the central magnet array **2210** from being attracted to the shaft **2250**, which could increase friction between the two and thereby increase the force necessary to move the central magnet array **2210** and frame **2260**, the shaft **2250** may be formed from a non-ferrous material such as tungsten, titanium, stainless steel, or the like.

As depicted in FIGS. **22**A-B, the coil **2200** is positioned within a frame **2260** that holds the central magnet array **2210**, but is not affixed to the coil **2200**. Rather, an air gap separates the coil **2200** from the central magnet array **2210** and the frame **2260** is free to move with respect to the coil **2200**, which is generally stationary. Further, the frame **2260** generally moves with the central magnet array **2210**. As illustrated in FIGS. **22**A-B, the frame **2260** may have an aperture formed therein of sufficient size to contain the coil **2200**. Even when the frame and central magnet array are maximally displaced within the housing **2220** (e.g., to one end or the other of the shaft **2250**), the coil **2200** does not contact any portion of the frame **2260**. It should be appreciated that the coil **2200** remains stationary in the housing **2220** while the frame **2260** and central magnet array **2210** move, although in other embodiments the coil **2200** may move instead of, or in addition to, the frame and/or central magnet array. However, by keeping the coil **2200** stationary, it may be easier to provide interconnections for the coil, such as between the coil and the flex, and therefore reduce the complexity of manufacture.

As shown in FIGS. **22**A-B, the central magnet array **2210** may be formed from at least two magnets **2211**, **2212** of opposing polarities. A center interface **2270** may be formed from a ferrous or non-ferrous material, depending on the embodiment. A ferrous material for the center interface **2270** may enhance the overall magnetic field generated by the central magnet array **2210**, while a non-ferrous material may provide at least a portion of a return path for magnetic flux and thus assist in localizing the flux within the housing **2220**. In some embodiments, the magnets **2211**, **2212** are formed from neodymium while the frame is tungsten. This combination may provide a strong magnetic field and a dense mass, thereby yielding a high weight per volume structure that may be used as the moving part of the haptic device **112**.

10. Example Crown Module

As described above, the device may include a crown that may be used to accept user input to the device. For the purposes of the following description, the described device **100** is one example of that shown and discussed above with respect to FIGS. **2-7**. However, certain features of the device **100**, including the external surface geometry, may be simplified or vary with respect to aspects of the device **100** discussed above.

In some embodiments, a crown may be used to accept rotary input from the user, which may be used to control aspects of the device. The crown may be knurled or otherwise textured to improve grip with the user's finger and/or thumb. In some embodiments, a crown may be turned by the user to scroll a display or select from a range of values. In other embodiments, the crown may be rotated to move a cursor or other type of selection mechanism from a first displayed location to a second displayed location in order to select an icon or move the selection mechanism between various icons that are output on the display. In a time

Masimo Ex. 1025
IPR Petition - US D947,842

keeping application, the crown may also be used to adjust the position of watch hands or index digits displayed on the display of the device. The crown may also be used to control the volume of a speaker, the brightness of the display screen, or control other hardware settings.

In some embodiments, the crown may also be configured to accept linear, as well as rotary, input. For example, the crown may be configured to translate along an axis when pressed or pulled by the user. In some cases, the linear actuation may be used as additional user input. The actuation may provide a binary output (actuated/not actuated) or may also provide a non-binary output that corresponds to the amount of translation along the axis of motion. In some instances, the linear input to the crown may be combined with the rotary input to control an aspect of the device.

The embodiments described herein may be used for at least a portion of the crown module integrated into a wearable electronic device. The embodiments are provided as examples and may not include all of the components or elements used in a particular implementation. Additionally, the crown module is not intended to be limited to the specific examples described below and may vary in some aspects depending on the implementation.

In some embodiments, an optical encoder may be used to detect the rotational motion of the crown. More specifically, the example provided below with respect to FIG. **23** may use an optical encoder to detect rotational movement, rotational direction and/or rotational speed of a component of the electronic device. Once the rotational movement, rotational direction and/or rotational speed have been determined, this information may be used to output or change information and images that are presented on a display or user interface of the electronic device.

Integrating an optical encoder into the space constraints of a typical wearable electronic device may be particularly challenging. Specifically, some traditional encoder configurations may be too large or delicate for use in a portable electronic device. The optical encoder described below may provide certain advantages over some traditional encoder configurations and may be particularly well suited for use with a crown module of a wearable electronic device.

As shown in the example embodiment of FIG. **23**, the optical encoder of the present disclosure includes a light source **2370**, a photodiode array **2380**, and a shaft **2360**. However, unlike typical optical encoders, the optical encoder of the present disclosure utilizes an encoding pattern disposed directly on the shaft **2360**. For example, the encoding pattern includes a number of light and dark markings or stripes that are axially disposed along the shaft **2360**. Each stripe or combination of stripes on the shaft **2360** may be used to identify a position of the shaft **2360**. For example, as light is emitted from the light source **2370** and reflected off of the shaft **2360** into the photodiode array **2380**, a position, rotation, rotation direction and rotation speed of the shaft **2360** may be determined. Once the rotation direction and speed are determined, this information may be used to output or change information or images that are presented on the display or user interface of the electronic device.

In other embodiments, the shape or form of the shaft of the encoder may be used to determine a position, rotation, rotation direction and rotation speed of the shaft. For example, the shaft may be fluted or have a number of channels that cause the light to be reflected in a number of different directions. Accordingly, a diffractive pattern may be used to determine the rotation, rotation direction and rotation speed of the shaft.

FIG. **23** illustrates a simplified depiction of the device **100** and crown module **642** in accordance with some embodiments. As shown in FIG. **23**, the crown module **642** may be integrated with the housing **601** of the device **100** and may be formed from a dial **2340** disposed at the end of a shaft **2360**. In the present embodiment, the crown module **642** also forms part of the optical encoder. As discussed above, the crown module **642** includes an optical encoder that includes a shaft **2360**, a light source **2370**, and a photodiode array **2380**. Although a photodiode array is specifically mentioned, embodiments disclosed herein may use various types of sensors that are arranged in various configurations for detecting the movement described herein. For example, the movement of the shaft **2360** may be detected by an image sensor, a light sensor such as a CMOS light sensor or imager, a photovoltaic cell or system, photo resistive component, a laser scanner and the like.

The optical encoder may produce an encoder output that is used to determine positional data of the crown module **642**. In particular, the optical encoder may produce an output that is used to detect that movement of the dial **2340** including the direction of the movement, speed of the movement and so on. The movement may be rotational movement, translational movement, angular movement, and so on. The optical encoder may also be used to detect the degree of the change of rotation of the dial **2340** and/or the angle of rotation of the dial **2340** as well as the speed and the direction of the rotation of the dial **2340**.

The signals or output of the optical encoder may be used to control various aspects of other components or modules of the device. For example, continuing with the time keeping application example discussed above, the dial **2340** may be rotated in a clockwise manner in order to advance the displayed time forward. In one implementation, the optical encoder may be used to detect the rotational movement of the dial **2340**, the direction of the movement, and the speed at which the dial **2340** is being rotated. Using the output from the optical encoder, the displayed hands of a time keeping application may rotate or otherwise move in accordance with the user-provided rotational input.

Referring back to FIG. **23**, the crown module **642** may be formed from dial **2340** that is coupled to the shaft **2360**. In some cases, the shaft **2360** and dial **2340** may be formed as a single piece. As the shaft **2360** is coupled to, or is otherwise a part of the dial **2340**, as the dial **2340** rotates or moves in a particular direction and at a particular speed, the shaft **2360** also rotates or moves in the same direction and with the same speed.

As shown in FIG. **23**, the shaft **2360** of the optical encoder includes an encoding pattern **2365**. As discussed above, the encoding pattern **2365** may be used to determine positional information about the shaft **2360** including rotational movement, angular displacement and movement speed. As shown in FIG. **23**, the encoding pattern **2365** may include a plurality of light and dark stripes.

Although light stripes and dark stripes are specifically mentioned and shown, the encoding pattern **2365** may consist of various types of stripes having various shades or colors that provide surface contrasts. For example, the encoding pattern **2365** may include a stripe or marking that has a high reflective surface and another stripe that has a low reflective surface regardless of the color or shading of the stripes or markings. In another embodiment, a first stripe of the encoding pattern **2365** may cause specular reflection while a second stripe of the encoding pattern **2365** may cause diffuse reflection. When the reflected light is received by the photodiode array **2380**, a determination may be made

Masimo Ex. 1025
IPR Petition - US D947,842

as to the position and movement of the shaft such as described below. In embodiments where a holographic or diffractive pattern is used, the light from the light source **2370** may diffract from the shaft **2360**. Based on the diffracted light, the photodiode array **2380** may determine the position, movement and direction of movement of the shaft **2360**.

In some embodiments, the stripes of the encoding pattern **2365** extend axially along the shaft **2360**. The stripes may extend along the entire length of the shaft **2360** or partially along a length of the shaft **2360**. In addition, the encoding pattern **2365** may also be disposed around the entire circumference of the shaft **2360**. In other embodiments, the encoding pattern **2365** may include a radial component. In yet other embodiments, the encoding pattern **2365** may have both a radial component and an axial component.

In some embodiments, the crown module may also include a tactile switch for accepting translational input from the user. FIGS. **24**A-B depict another example of a crown module **642***a* having a tactile switch assembly **2410**. As shown in FIG. **24**A, the tactile switch assembly **2410** may include a dial **2448** (or button), a coupling **2418**, a shear plate **2456**, and a tactile switch **2414**.

In the embodiment depicted in FIGS. **24**A-B, the dial **2448** is translatable and/or rotatable relative to the housing. The ability of the dial **2448** to translate and rotate relative to the housing allows a user to provide a rotational force and/or translating force to the tactile switch assembly. In particular, the dial **2448** of the present example may be operably coupled to or form part of an optical encoder, in accordance with the example described above with respect to FIG. **23**.

In the present example, the dial **2448** includes an outer surface **2432** that is configured to receive a rotary or rotational user input and a stem **2450** that extends from an interior surface **2434** of the dial **2448**. The stem **2450** may define a coupling aperture that extends longitudinally along a length or a portion of a length of the stem **2450**. In the depicted example, the stem **2450** may be hollow or partially hollow.

In the example depicted in FIGS. **24**A-B, the coupling **2418** may be a linkage, such as a shaft, that couples the dial **2448** to the tactile switch **2414**. The coupling **2418** may be integrally formed with the dial **2448** or may be a separate component operably connected thereto. For example, the stem **2450** of the dial **2448** may form the coupling member that is integrally formed with the dial **2448**. The coupling **2418** may be made of a conductive material, such as one or more metals or metal alloys. Due to the conductive characteristics, the coupling **2418** may further act to electrically couple the dial **2448** to the tactile switch **2414** and shear plate **2456**. In the example depicted in FIGS. **24**A-B, the shear plate **2456** is positioned between the coupling **2418** and the tactile switch **2414**. In some embodiments, the shear plate **2456** may prevent or reduce shearing forces from the coupling from being transmitted to the tactile switch. The shear plate **2456** also allows transfer of linear force input from the dial **2448** to the switch **2414**.

The configuration depicted in FIGS. **24**A-B may be used to accept both rotational and translational input from the user. For example, if a user provides a rotational force to the dial **2448**, the coupling **2418** and dial **2448** may rotate in the direction of the force. The coupling **2418** may be attached to or integrated with one or more sensors that are configured to detect rotational movement. For example the coupling **2418** may be integrated with an optical encoder, similar to the example described above with respect to FIG. **23**. Additionally, if a user provides a translational force to the dial **2448**, the force may be transmitted through the dial **2448** and coupling **2418** to actuate the switch **2414**. In some cases, the switch **2414** includes a metal dome switch that is configured to provide a tactile feedback when actuated. In some cases, the actuation of a dome switch may be perceived by the user as a click or release as the switch **2414** is actuated. Once the force has been removed from the dial **2448**, the dome switch resiliently returns to its original position, providing a biasing force against the coupling **2418** to return both the dial **2448** and the coupling **2418** to their original positions. In some embodiments, the tactile switch **2414** may include a separate biasing element, such as a spring, that exerts a force (either directly or indirectly via the shear plate) against the coupling. FIG. **24**A depicts the tactile switch assembly **2410** when there is no force applied (un-actuated). FIG. **24**B depicts the tactile switch assembly **2410** when there is a translational force applied to the dial **2448** (actuated).

11. Example Band Attachment Mechanism

For the purposes of the following description, the described device **100** is one example of that shown and discussed above with respect to FIGS. **2**-**7**. However, certain features of the device **100**, including the external surface geometry, may be simplified or vary with respect to aspects of the device **100** discussed above.

As described above, a wearable electronic device may include a band that is attached to a device body having one or more receiving features. In particular, the housing may include or form a receiving feature that facilitates an interchange or replacement of different bands that are used to secure the device to the wrist of the user. By replacing or interchanging bands the device may be adapted for multiple uses ranging from sporting activities to professional or social activities.

In some embodiments, the receiving features are configured to be operated without the use of special tools or fixtures. For example, the bands may be interchanged by hand or with the help of a simple tool, such as a pointed object. Additionally or alternatively, a tool or other component, such as a component of the device to which the attachment system is coupled, may be configured to actuate a button or other component of the attachment system to secure and/or release the band from the device. In one embodiment, the lug portion of a band may be configured to be inserted into an opening or channel portion of the receiving feature. Once the lug of the band has been inserted into the opening, the lug may slide within the opening of the device until the band is secured or otherwise coupled to the device. The coupling between the band and the receiving feature may provide a secure attachment of the band to the housing or device body. Just as the band is configured to slide into the channel of the receiving feature, the lug may also slide out of the channel of the receiving feature allowing the band to be detached from the device body.

In one embodiment, the receiving feature includes a locking mechanism, which may be integrated with portions of either the band or the receiving feature. In one example, as the band is inserted into a receiving feature of the device, the locking mechanism interfaces with a portion of the receiving feature to lock or otherwise secure the band within the receiving feature. The locking mechanism may also be configured to interface with a releasing mechanism associated with the receiving feature. For example, a releasing mechanism may be configured to disengage or release the locking mechanism. In some implementations. actuation of the releasing mechanism causes the locking mechanism to be released and allows the band to be removed by sliding within the receiving feature.

Masimo Ex. 1025
IPR Petition - US D947,842

FIG. **25**A depicts a receiving feature and band assembly as viewed from the bottom of the device body. As shown in FIG. **25**A, a receiving feature **623***a* includes an opening or channel **2501** that is formed into the body or housing of the device. The channel **2501** is configured to receive the lug **2510** attached to an end of the band strap **621***a*. The receiving feature **623***a* may also include a locking mechanism **2530** that is configured to maintain the band strap **621***a* within the channel **2501** once it has been installed. As discussed above, the locking mechanism **2530** may be releasable by the user, which may facilitate band replacement. In this example, the locking mechanism **2530** includes a spring-loaded retaining mechanism that engages the lug **2510** to retain the lug **2510** in the channel **2501** and maintain the attachment of the band strap **621***a* to the device. As shown in FIG. **25**A, the locking mechanism **2530** also includes a button located on the bottom of the housing that may be depressed by the user to release the locking mechanism and allow the lug **2510** and the band strap **621***a* to be removed from the channel **2501**. In the present example, the button of the locking mechanism **2530** is located on a curved portion of the case or housing. In some embodiments, the button of the locking mechanism **2530** is located along the centerline of the case or housing.

In some embodiments, the opening or channel **2501** of the receiving feature **623***a* includes a port or connector for receiving a mating electrical component. In some embodiments, the connector or port is covered by a label or sticker so that the inside surface of the opening or channel **2501** appears continuous. The connector or port may be located along the vertical centerline of the case or housing.

FIG. **25**B depicts an example exploded view of the receiving feature **623***a* and the lug **2510** of the band strap **621***a*. As shown in FIG. **25**B, the band strap **621***a* may be formed from a separate part and attached to lug **2510** via a pivot or other type of joint. In other embodiments, the band strap **621***a* may have an end feature that is integrally formed as part of the band strap **621***a*. As also shown in FIG. **25**B, the lug **2510** may be attached to the receiving feature **623***a* by aligning the axis of the lug **2510** with the axis of the channel **2501** and then sliding the lug **2510** into the channel **2501**.

FIG. **25**C depicts an example assembly sequence of the lug **2510** being inserted into the channel **2501** of the receiving feature **623***a*. As shown in FIG. **25**C, the lug **2510** may be positioned along the side of the receiving feature **623***a* having the lug **2510** approximately aligned with the channel **2501** of the receiving feature **623***a*. The lug **2510** (and band strap **621***a*) may then be inserted into the channel **2501** of the receiving feature **623***a* by sliding the lug **2510** along the length of the channel **2501**. Once the lug **2510** is approximately centered in the channel **2501** of the receiving feature **623***a*, the locking mechanism **2530** or other securing feature may engage, thereby retaining the lug **2510** (and band strap **621***a*) within the channel **2501**. As previously discussed, the lug **2510** (and band strap **621***a*) may be removed from the receiving feature **623***a* by depressing the button of the locking mechanism **2530**, which may disengage the lock and allow movement of the lug **2510** within the channel **2501**.

The example described above is provided with respect to one example embodiment. The geometry of the end of the band strap and/or the geometry of the channel may vary depending on the implementation. Additionally, the engagement mechanism may vary depending on the design of the band strap and the device body. The geometry or layout of the features may vary and remain within the scope of the present disclosure. Additionally, while the examples provided above are described with respect to attaching a band strap to a device body, the receiving feature (**623***a*) may be used to attach a variety of other parts to the device body. For example a lanyard, cable, or other accessory may be attached to the device body using the receiving feature and other similar features.

12. Example Bands

As described above, a wearable electronic device may include a band that is used to secure the device to the wrist of a user. In some embodiments, the band may be formed from two band straps that are attached to the housing of the device body. The band straps may be secured around the wrist of a user by a clasp or latching mechanism. As also described above, the device may be configured to facilitate replacement of the band. This feature may allow the use of a variety of types of bands, which may adapt the device for multiple uses ranging from sporting activities to professional or social activities.

In some cases, the band may be formed from a woven textile material. In one example, the band is formed from a woven material that includes one or more strands or threads formed from a natural or synthetic material. The woven material may be formed, for example, from a plurality of warp threads that are woven around one or more weft threads. More specifically, the woven material may include a plurality of warp threads disposed along the length of the band, and at least one weft thread positioned perpendicular to, and coupled to, woven or interlaced between the plurality of warp threads. In some cases, the plurality of warp threads may run the entire length of the woven portion of the band strap. Additionally, in some cases, the at least one weft thread may include a single thread that may be continuously woven between the plurality of warp threads or, alternatively, may include a plurality of threads that may be woven between the plurality of warp threads. A weft thread that is woven between a plurality of warp threads may form consecutive cross-layers with respect to the plurality warp threads in order to form the band.

In some cases, one or more of the strands or threads may be a metallic or conductive material. This may improve the strength of the band and may also facilitate coupling with magnetic elements, such as a metallic clasp. In some cases, other elements may be woven into the band, including, for example, product identifying elements, decorative elements, or functional components.

In other embodiments, the band may be formed from a metallic mesh material. In one example, the metallic mesh is formed from an array of links that are interlocked to form a sheet of fabric. Some or all of the links in the mesh may be formed from a ferromagnetic material, which may facilitate magnetic engagement with a magnetic clasp. In some cases, each link of the mesh is formed from a section of metallic filament that is bent or formed into a closed shape. Each closed shape may be interlocked with one or more adjacent links to form a portion of the sheet or fabric. In some cases, a metallic filament is formed around a series of rods or pins that are disposed at a regular spacing within the mesh. In some cases, one or more strands or filaments that may be formed from a ferromagnetic material are woven or integrated with the links of the mesh.

In other examples, the band may be formed from a sheet of material. For example, the band may be formed from a synthetic leather, leather, or other animal hide. Additionally or alternatively, the band may be formed from a polymer material, an elastomer material, or other type of plastic or synthetic. In some cases, the band is formed from a silicone sheet material.

Masimo Ex. 1025
IPR Petition - US D947,842

The clasp that is used to attach the free ends of the band straps may vary depending on the material that is used and the construction of the band. For example, as mentioned above, a metallic mesh material may use a metallic clasp to join the ends of the band. Additionally, a leather band may be integrated with magnetic and/or ferromagnetic components and may include a magnetic clasp. In some embodiments, the free ends of the band straps are secured using a buckle or tang on a first band strap that is configured to interface with a hole or aperture in a second band strap. A variety of other clasp configurations may also be used.

13. Example Display

For the purposes of the following description, the described device **100** is one example of that shown and discussed above with respect to FIGS. **2-7**. However, certain features of the device **100**, including the external surface geometry, may be simplified or vary with respect to aspects of the device **100** discussed above. As described above, the device includes a display disposed within the housing or enclosure. The device may be formed from a liquid crystal display (LCD), organic light emitting diode (OLED) display, organic electroluminescence (OEL) display, or other type of display device. The display may be used to present visual information to the user, including, for example, a graphical user interface, notifications, health statistics, and the like. In some cases, the display may be configured to present the current time and date similar to a traditional watch or timepiece.

In some embodiments, the display is formed from an organic light emitting diode (OLED) display element. An active region of the display may include an array of light-emitting display pixels **2604** such as array **2602**, shown in FIG. **26**. Pixels **2604** may be arranged in rows and columns in array **2602** and may be controlled using a pattern of control lines. Each pixel may include a light-emitting element such as organic light-emitting diode **2612** and associated control circuitry **2610**. Control circuitry **2610** may be coupled to the data lines **2606** and gate lines **2608** so that control signals may be received from driver circuitry, which may be implemented as an integrated circuit. Although described as an OLED display, certain embodiments may implement other display technology, such as LCD displays and the like.

To the extent that multiple functionalities, operations, and structures are disclosed as being part of, incorporated into, or performed by device **100**, it should be understood that various embodiments may omit any or all such described functionalities, operations, and structures. Thus, different embodiments of the device **100** may have some, none, or all of the various capabilities, apparatuses, physical features, modes, and operating parameters discussed herein

Although the disclosure above is described in terms of various exemplary embodiments and implementations, it should be understood that the various features, aspects and functionality described in one or more of the individual embodiments are not limited in their applicability to the particular embodiment with which they are described, but instead can be applied, alone or in various combinations, to one or more of the other embodiments of the invention, whether or not such embodiments are described and whether or not such features are presented as being a part of a described embodiment. Thus, the breadth and scope of the present invention should not be limited by any of the above-described exemplary embodiments but instead defined by the claims herein presented.

I claim:

1. An electronic device, comprising:

a housing defining a first opening opposite to a second opening;

a band attached to the housing and configured to secure the electronic device to a user;

a display positioned in the first opening;

a ceramic cover disposed over the second opening and forming a portion of an exterior surface of the electronic device;

a biosensor module disposed within the second opening below the ceramic cover; and

a wireless charging receive coil aligned with the second opening and below the ceramic cover;

wherein:

the ceramic cover is configured to pass optical signals generated by the biosensor module; and

the ceramic cover is configured to pass wireless power from an external wireless charging device to the wireless charging receive coil.

2. The electronic device of claim **1**, wherein the biosensor module comprises:

a light source configured to emit light toward a region of skin of the user; and

a detector configured to receive light reflected from the region of skin.

3. The electronic device of claim **2**, wherein:

the ceramic cover defines a first opening to transmit the light from the light source; and

the ceramic cover defines a second opening to receive the light reflected from the region of skin.

4. The electronic device of claim **2**, wherein:

the light source and the detector are configured to measure changes in light absorption by the region of skin;

the electronic device is configured to compute a health metric using the measured change in light absorption; and

the display is configured to display information associated with the health metric.

5. The electronic device of claim **2**, wherein the light source and the detectors are configured to operate as a photoplethysmogram (PPG) sensor.

6. The electronic device of claim **1**, wherein:

the ceramic cover is a disk having a disk diameter that is greater than an opening diameter of the second opening; and

the ceramic cover forms a water-tight seal with the housing along a perimeter of the ceramic cover.

7. The electronic device of claim **1**, wherein:

the second opening has an opening diameter;

the wireless charging receive coil has a coil diameter that is less than the opening diameter; and

the wireless charging receive coil is configured to receive the wireless power through the second opening.

8. The electronic device of claim **1**, wherein:

the ceramic cover has a convex contoured shape that protrudes toward the user; and

the convex contoured shape facilitates alignment between the ceramic cover and a mating surface of the external wireless charging device.

9. A wearable electronic device, comprising:

a housing comprising a bottom portion defining an opening;

a biosensor module aligned with the opening;

a wireless charging receive coil positioned within the housing and aligned with the opening;

a battery operably coupled to the wireless charging receive coil; and

a cover disposed over the biosensor module; wherein:

the cover is configured to pass optical signals to and from the biosensor module; and

the cover is configured to pass wireless power to the wireless charging receive coil.

10. The wearable electronic device of claim **9**, wherein:

the housing is formed from a metal material; and

the cover is formed from a non-metal material.

11. The wearable electronic device of claim **9**, wherein:

the wireless charging receive coil has a coil diameter that is less than a diameter of the biosensor module; and

the wireless charging receive coil is configured to receive the wireless power through the biosensor module.

12. The wearable electronic device of claim **9**, wherein:

the cover is a disk having a convex shape that protrudes away from the housing; and

the convex shape is configured to facilitate alignment with a concave surface of an external inductive power transmitter dock.

13. The wearable electronic device of claim **12**, wherein:

the wearable electronic device is magnetically coupled to the external inductive power transmitter dock through the cover and the biosensor module.

14. The wearable electronic device of claim **9**, wherein:

the biosensor module includes an array of optical components; and

the cover includes an array of windows, each window aligned with a corresponding optical component of the array of optical components.

15. An electronic watch, comprising:

a housing defining an interior cavity and a bottom portion having an opening;

a band attached to the housing and configured to secure the electronic watch to a user;

a biosensor module positioned along the bottom portion of the housing and configured to transmit optical signals and receive reflected optical signals through the opening of the housing; and

a wireless charging receive coil positioned within the interior cavity and configured to receive wireless power through the opening of the housing.

16. The electronic watch of claim **15**, wherein:

the wireless charging receive coil is configured to receive power from an external inductive power transmitter dock; and

the electronic watch is configured to magnetically couple with the external inductive power transmitter dock.

17. The electronic watch of claim **15**, wherein:

the wireless charging receive coil is configured to receive power from an external inductive power transmitter dock;

the electronic watch defines a convex contoured surface along the bottom portion; and

the convex contoured surface is configured to facilitate alignment with a concave contoured surface of the external inductive power transmitter dock.

18. The electronic watch of claim **17**, wherein the convex contoured surface is configured to protrude toward a portion of skin of the user when the electronic watch is worn.

19. The electronic watch of claim **15**, wherein:

the electronic watch is configured to compute a health metric using the biosensor module; and

the health metric is one or more of: a heart rate, a respiration rate, a blood oxygenation level, a blood volume estimate, or blood pressure.

20. The electronic watch of claim **19**, wherein:

the electronic watch includes a display; and

the display is configured to display information associated with the health metric.

* * * * *