University of Zurich[UZH]

**Zurich Open Repository and Archive**
University of Zurich
Main Library
Strickhofstrasse 39
CH-8057 Zurich
www.zora.uzh.ch

Year: 1998

# Reflectance Pulse Oximetry – Principles and Obstetric Application in the Zurich System

König, Volker ; Huch, Renate ; Huch, Albert

Abstract: Transmission and reflectance are the two main modes of pulse oximetry. In obstetrics, due to the absence of a transilluminable fetal part for transmission oximetry, the only feasible option is the reflectance mode, in which sensor and detector are located on the same surface of the body part. However, none of the reflectance pulse oximeters developed for intrapartum use are fully satisfactory, as indicated by the fact that none have entered routine use. We have designed, developed, constructed and tested a reflectance pulse oximeter with the possibility to adjust the electronic circuits and signal processing in order to determine the effects of various parameters on signal amplitude and wave-form and to optimize the sensitivity and spatial arrangement of the optical elements. Following an explanation of the principles of reflectance pulse oximetry, we report our experience with the design, development, construction and field-testing of an in-house reflectance pulse oximetry system for obstetric application

DOI: https://doi.org/10.1023/a:1009983010772

Posted at the Zurich Open Repository and Archive, University of Zurich
ZORA URL: https://doi.org/10.5167/uzh-156078
Journal Article
Published Version

Originally published at:
König, Volker; Huch, Renate; Huch, Albert (1998). Reflectance Pulse Oximetry – Principles and Obstetric Application in the Zurich System. Journal of Clinical Monitoring and Computing, 14(6):403-412.
DOI: https://doi.org/10.1023/a:1009983010772

# REFLECTANCE PULSE OXIMETRY – PRINCIPLES AND OBSTETRIC APPLICATION IN THE ZURICH SYSTEM

*Volker König, Renate Huch, and Albert Huch*

König V, Huch R, Huch A. Reflectance pulse oximetry – principles and obstetric application in the zurich system.
J Clin Monit 1998; 14: 403–412

**ABSTRACT.** Transmission and reflectance are the two main modes of pulse oximetry. In obstetrics, due to the absence of a transilluminable fetal part for transmission oximetry, the only feasible option is the reflectance mode, in which sensor and detector are located on the same surface of the body part. However, none of the reflectance pulse oximeters developed for intrapartum use are fully satisfactory, as indicated by the fact that none have entered routine use. We have designed, developed, constructed and tested a reflectance pulse oximeter with the possibility to adjust the electronic circuits and signal processing in order to determine the effects of various parameters on signal amplitude and wave-form and to optimize the sensitivity and spatial arrangement of the optical elements.

Following an explanation of the principles of reflectance pulse oximetry, we report our experience with the design, development, construction and field-testing of an in-house reflectance pulse oximetry system for obstetric application.

**KEY WORDS.** Oxygen saturation, reflectance pulse oximetry, intrapartum fetal monitoring.

## INTRODUCTION

Pulse oximetry is the combination of spectrophotometry and plethysmography. It permits rapid noninvasive measurement of arterial oxygen saturation with the added advantages of simple sensor application and direct measurement, requiring neither calibration nor pre-adjustment. Pulse oximeters are thus in widespread and fast-increasing use, e.g. in intensive care, anesthetics and neonatology [1]. All these applications employ "transmission" pulse oximetry, so called because the light used to determine blood oxygen saturation is "transmitted" from a light emitter on one side of the body part to a light receiver on the other side; suitable sites are the fingers in adults or hands and feet in neonates or children, which are said to be "transilluminated."

In obstetrics, fetal oxygen status during labor is a crucial parameter. However, no transilluminable fetal part is available. The only option in this case is reflectance oximetry [2], using a sensor with its light emission and detection elements on the same surface of the body part. Various types of such a reflectance pulse oximeter have been developed for intrapartum use at various locations. However, for a wide variety of reasons, all are still experimental and not in full routine use [3–7].

Basically a reflectance measurement can be achieved using planar sensors – which can be produced, for example, by modifying conventional transmission sensors – and a sensitive modern pulse oximeter. However,

From the Perinatal Physiology Research Department, Department of Obstetrics, Zurich University Hospital, CH-8091 Zurich, Switzerland.

Received Nov 13, 1997, and in revised form Jun 23, 1998. Accepted for publication Aug 4, 1998.

Address correspondence to Volker König, Perinatal Physiology Research Department, Department of Obstetrics, Zurich University Hospital, CH-8091 Zurich, Switzerland.
E-mail: vkg@fhk.usz.ch

*Journal of Clinical Monitoring and Computing* **14**: 403–412, 1998.
© 1998 *Kluwer Academic Publishers. Printed in the Netherlands.*



APL_MAS_ITC_00372039
RX-0487.0002
Masimo Ex. 1036
IPR Petition - US D947,842

such instruments come with a "black-box" microprocessor-controlled mode of operation making constructional adjustments to the electronic circuits and signal processing virtually impossible. As a result, it becomes difficult to determine the effect of various parameters on signal amplitude and wave-form, optimize sensor sensitivity to light intensity and the arrangement of the optical elements, and hence assess the dependence of arterial oxygen saturation measurement on key physical, technical and above all physiological variables. This was the aim driving our decision to design, develop and construct in-house a system dedicated to obstetric applications.

Following a brief review of the principles of pulse oximetry, we report our experience with the development of the new device, together with some field-testing results.

## PRINCIPLES OF PULSE OXIMETRY

### *Signal recording*

Light is absorbed on passing through matter. The degree of absorption depends on the nature of the transilluminated material and the wavelength of the light employed. All optical techniques for determining arterial oxygen saturation use the marked difference in the absorption of red light between oxygenated and reduced hemoglobin.

The absorption of light passing through bone or nonpulsatile tissue is constant over time. Oxygenated and reduced hemoglobin in the arterial vascular bed, on the other hand, cause changes in absorption timed by the heart rate due to the pulsatile variation in artery thickness. The total intensity of the light after passing through tissue can be measured, for example, as the photocurrent I(t) of a photodiode, and is obtained from the Lambert-Beer absorption law as:

$$I(t) = I_0 \cdot \exp(-\varepsilon_{tissue} \cdot s) \cdot \exp(-(SO_2 \cdot \varepsilon_{HbO} + (1 - SO_2) \cdot \varepsilon_{Hb}) \cdot d(t)) \quad (1)$$

where

- $I_0$ intensity of incident light
- $\varepsilon_{tissue}$ mean absorption coefficient of tissue (function of wavelength)
- s mean thickness of transilluminated tissue
- $SO_2$ oxygen saturation to be determined (= HbO/(HbO + Hb), i.e. ratio of oxygenated hemoglobin concentration to sum of oxygenated and reduced hemoglobin concentrations)
- $\varepsilon_{HbO}$ absorption coefficient of oxygenated hemoglobin (function of wavelength)
- $\varepsilon_{Hb}$ absorption coefficient of reduced hemoglobin (function of wavelength)
- d(t) time function of mean pulsatile change in artery thickness, with amplitude d = d(diastole) − d(systole)

Measurement may be impaired by light transmitted directly from the light source to the receiver or light which does not pass through arterially perfused tissue. If this "direct light" $I_{dir}$ is taken into account, Equation (1) changes to:

$$I(t) = I_{tissue} \cdot \exp(-(SO_2 \cdot \varepsilon_{HbO} + (1 - SO_2) \cdot \varepsilon_{Hb}) \cdot d(t)) + I_{dir} \quad (1a)$$

where

$$I_{tissue} = I_0 \cdot \exp(-\varepsilon_{tissue} \cdot s)$$

Since the pulsatile component of the absorption is at most a few percent, i.e. the exponent of the second e function in Equation (1) is very small, we can use the approximation:

$$\exp(x) = 1 + x \quad \text{for } |x| \ll 1$$

to obtain the very close approximation:

$$I(t) = I_{tissue} \cdot (1 - (SO_2 \cdot \varepsilon_{HbO} + (1 - SO_2) \cdot \varepsilon_{Hb} \cdot d(t)) + I_{dir} \quad (1b)$$

This light intensity is measured in the photodiodes and can be broken down electronically into two components, a time-independent signal

$$DC = I_{tissue} + I_{dir} \quad (2)$$

with amplitude equal to the value of this signal

$$dc = DC = I_{tissue} + I_{dir} \quad (3)$$

and a signal which varies in time with the pulsatile change in artery thickness

$$AC = I_{tissue} \cdot (SO_2 \cdot \varepsilon_{HbO} + (1 - SO_2) \cdot \varepsilon_{Hb}) \cdot d(t) \quad (4)$$

with amplitude

$$ac = I(\text{diastole}) - I(\text{systole}) = I_{tissue} \cdot (SO_2 \cdot \varepsilon_{HbO} + (1 - SO_2) \cdot \varepsilon_{Hb}) \cdot d. \quad (5)$$

The ratio between the ac and dc amplitudes is then

APL_MAS_ITC_00372040
RX-0487.0003



Masimo Ex. 1036
IPR Petition - US D947,842

$$r = ac/dc = (I_{tissue}/(I_{tissue} + I_{dir}))\cdot (SO_2 \cdot \varepsilon_{HbO} + (1 - SO_2) \cdot \varepsilon_{Hb}) \cdot d. \quad (6)$$

In the case that "direct light" $I_{dir} = 0$, this ratio r is independent of the incident light intensity $I_0$ and of the absorption in the nonpulsating tissue value $I_{tissue}$:

$$r = ac/dc = (SO_2 \cdot \varepsilon_{HbO} + (1 - SO_2) \cdot \varepsilon_{Hb}) \cdot d \quad \text{for } I_{dir} = 0. \quad (6a)$$

This ratio r is then dependent only on the oxygen saturation $SO_2$ to be determined, the known absorption coefficients $\varepsilon_{HbO}$ and $\varepsilon_{Hb}$, and the mean pulsatile change d in the thickness of the arterial vessels in the transilluminated region.

To eliminate this dependence on d, the measurement is performed at two wavelengths with maximally differing absorption coefficients. On the assumption that the d values are the same for both wavelengths, we obtain a variable

$$R = r_{red}/r_{ir} = (ac/dc)_{red}/(ac/dc)_{ir} \quad (7)$$

$$= (SO_2 \cdot \varepsilon_{HbO} + (1 - SO_2) \cdot \varepsilon_{Hb})_{red}/(SO_2 \cdot \varepsilon_{HbO} + (1 - SO_2) \cdot \varepsilon_{Hb})_{ir} \quad (7a)$$

from which the unknown $SO_2$ is readily calculated without knowing the incident light intensity or tissue thicknesses.

Calculation assumes the following physical prerequisites:

- No light must be measured that has not passed through the pulsatile vascular bed e.g. light passing directly from light source to receiver ($I_{dir}$).
- The pulsatile changes in artery thickness must be the same for both wavelengths, i.e. both wavelengths must transilluminate the same tissue region.
- Valid measurement assumes that the pulsatile signal originates only from varying absorption by arterial oxygenated and reduced hemoglobin. The results are falsified by other causes of pulsatile changes in optical thickness, e.g. hemoglobin derivatives, circulating pigments, pulsatile changes in thickness produced mechanically in nonarterially perfused tissue by cardiac action, and, above all, venous pulsation.
- To simplify description of the principle behind measurement and its limitations, the Lambert-Beer law was assumed valid for the passage of light through tissue. However, as light is not only absorbed in tissue but also scattered, the law is of limited applicability [8]. The exact absorption coefficients must be corrected by taking the scattering effect into account. However, despite various theoretical models [9, 10], the scatter coefficients of the various tissue types are not known with sufficient accuracy to permit exact calculation. Experimental calibration thus has to be performed by directly comparing the pulse oximeter readings with arterial blood sample values.

### *Transmission pulse oximetry*

The optical elements are located on opposite sides of a body part. The sensors are applied mainly to the fingers and toes. Ears and nose are used only rarely due to poor perfusion. In neonates the sensor is applied around the hand or foot. This arrangement largely ensures that the optical paths are the same for both wavelengths. Nevertheless, incorrect sensor attachment can give spurious results, e.g. if some of the transmitted light reaches the receiving diodes around the outside of a finger as "direct light."

Signal magnitudes are an important determinant of measurement accuracy: in normal fingertips, the ratio of the signal due to absorption in pulsating blood (ac) to the signal due to absorption in total tissue (dc), r = ac/dc, is 0.02–0.05.

### *Reflectance pulse oximetry*

In this method the light backscattered in the body is used to determine oxygen saturation. The optical elements are thus located on the same plane on the same body surface. Reflection originates from nonhomogeneity in the optical path, i.e. at the interfaces between materials with different refractive indices. This means that on physiological grounds, strong reflections can be expected on the entry of light into bone. The transilluminated tissue must also be well perfused to obtain as strong a signal as possible. Not all body parts are as well perfused as the fingers or hands, but an ac/dc ratio of 0.001–0.005 can be achieved on the forehead. Perfusion is also good over the sternum. One method of signal enhancement is to heat the measurement site to induce hyperperfusion, which can safely be performed up to 42 °C. A rubefacient, e.g. nicotinic acid (Rubriment), can also be applied to the measurement site.

The principal physical limitations are the following:

- The sensor design must eliminate "direct light," i.e. light passing directly from the light sources to the photodiodes or that is only scattered in the outer part of the skin.
- The measured AC signals are some 10 times weaker

APL_MAS_ITC_00372041
RX-0487.0004



Masimo Ex. 1036
IPR Petition - US D947,842

than in the transmission method. The conditions governing the heating of the light-emitting diodes (LED) limit the potential for producing stronger signals by increasing the incident light intensity: not only can high uncontrolled temperatures damage tissue at the measurement site, but the wavelength of the emitted light changes as the LEDs become warmer. For this reason the photodiode area must be as large as possible.

- As in the transmission mode, the principle of measurement is the determination of absorption, except that this now refers to incoming reflected light. The light path is less well defined than in transmission mode, and thus may differ between the two wavelengths. The effective absorption coefficients of the calibration inserted in the Lambert-Beer law must be checked and if necessary corrected by comparison with photometrically measured arterial blood values.

## THE ZURICH REFLECTANCE PULSE OXIMETER

### *Sensors*

In constructing planar reflection sensors, i.e. sensors in which the photoelectric emitting and receiving elements lie next to each other in virtually the same plane, special attention was paid to the following points (Figure 1).

- For maximal independence from local tissue differences, a radially-symmetric pattern was selected for the photoelements. The light source – a chip with two LEDs for the wavelengths red = 660 nm and infrared = 920 nm – was placed in the center of the sensor and surrounded by a radial photodiode array for detecting the reflected light. To obtain a good signal at minimal light intensity, the area of the photodiodes had to be as large as possible. After some preliminary experiments, six BX33 photodiodes (Siemens) were used with a mean radius of 17 mm. Their connections are led outwards individually, so that the sensor as a whole remains operational if a wire breaks or an individual diode is lost. This arrangement gives an external sensor diameter of 22 mm.
- A guard ring around the LEDs acts as a barrier to "direct light." The sensor must also fit snugly to the skin to minimize the risk of ambient light reaching the photodiodes.
- Unlike with transmission sensors, fixation to the measurement site can pose problems. Aluminum sensor units are readily fixed with double-sided adhesive ECG rings. However, these rigid sensor heads are unsuited to the small radii of curvature of the fetal/neonatal head. Experimentation led to the choice of a vacuum system using sensors cast from silicone rubber, with a suction groove for fixation, a guard ring against direct light, and a connector for a suction pump. The photoelectric components are identical in both types of sensor.
- Some metal sensors were fitted with a resistance-wire heating coil of maximal output 200 mW to induce local hyperemia. The temperature was monitored by a negative temperature coefficient (NTC) resistor incorporated in the sensor unit.

Numerous types of sensor meeting the above requirements were built. A sensor used for intrapartum measurements – cast from silicone rubber with suction channel and pump connection – is shown in cross-section in Figure 1. It is attached to the fetal head with a vacuum of approximately 100 mbar.

### *Electronics*

Initially, we decided to separate signal processing in the analog part before the analog/digital converter (ADC), including signal amplification, filtering, and separation into DC and AC signals, all handled electronically ; the post-ADC digital part was handled by software which input the data, averaged and evaluated amplitudes, calculated saturation and heart rate, and produced a somewhat complicated screen display. Now, using modern techniques, we have a system in preparation in which a fast separate microprocessor unit handles most signal processing and digital filtering tasks.

Figure 2 shows the block diagram of the current apparatus with the following individual units:

- Time control of measurement
  From a rectified mains power supply signal (100 Hz), a phase-locked loop (PLL) – connected as a frequency multiplier – generates a square-wave signal of 64 kHz. Coupling to the line frequency eliminates data acquisition faults due to interferences with the line frequency. The 64 kHz from the PLL clock drives a 7-bit counter that addresses an EPROM giving a data cycle of 1 kHz, 64 pulses long. The output pulses of the EPROM control the entire sequence of light emission, signal acquisition and signal processing.
- LED drive
  The oppositely poled red and infrared LEDs are located in the output circuit of a current-stabilized push-pull output stage. They are triggered by digital signals from the control unit via analog switches at the 1 kHz sampling rate in the equally spaced se-

APL_MAS_ITC_00372042
RX-0487.0005



Masimo Ex. 1036
IPR Petition - US D947,842

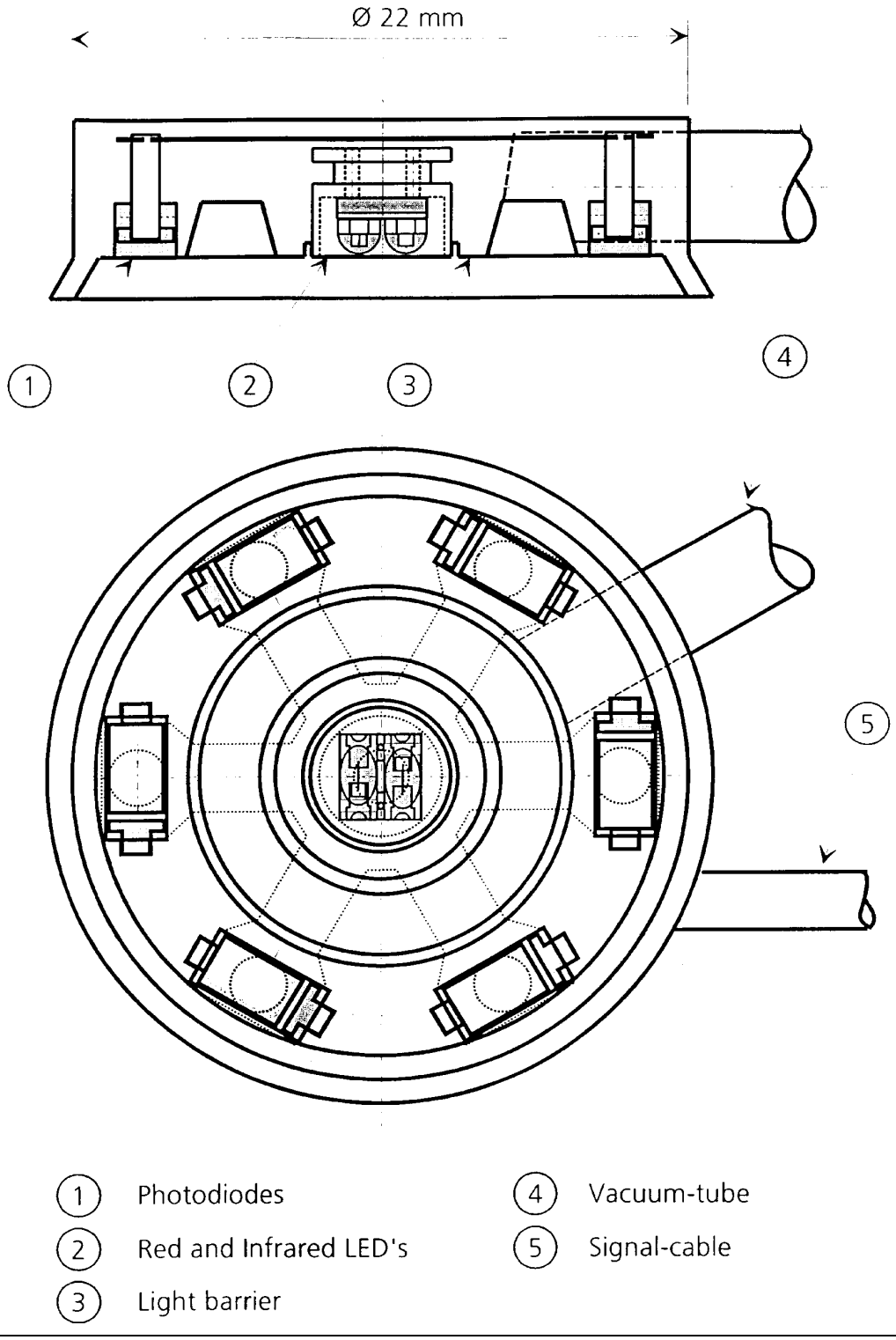


*Fig. 1. Cross-section through a silicone-rubber reflection sensor for intrapartum measurement of oxygen saturation.*

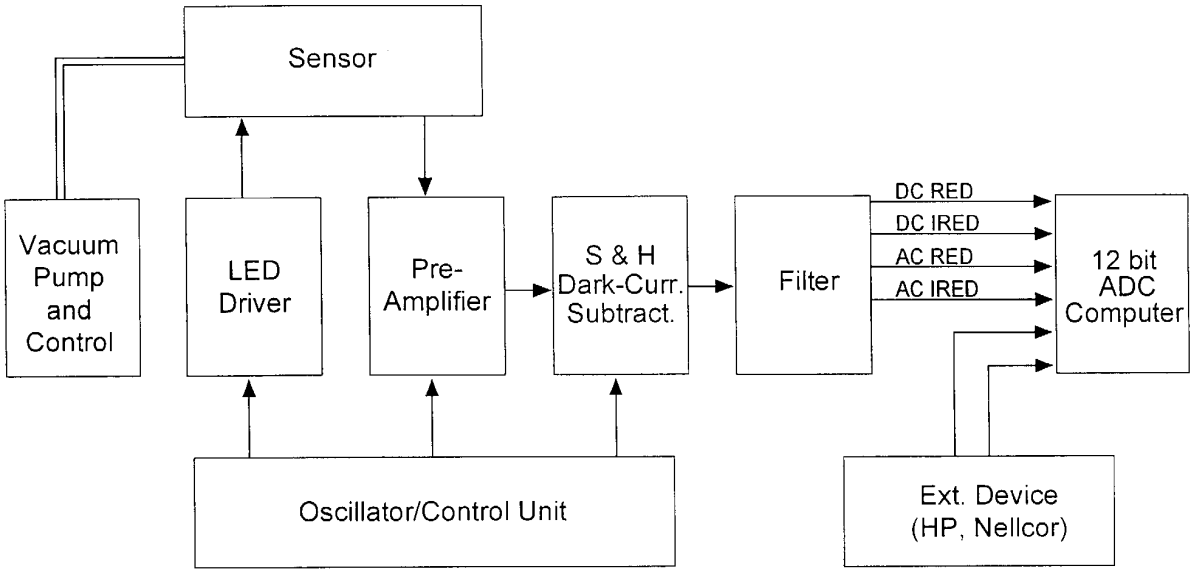


*Fig. 2. Schematic representation of measurement electronics.*

quence: infrared-dark-red-dark (overall length: 1 ms). Light intensity is determined by the amplitude of the signal driving this output stage. Input signal intensity can be selected in two ways:

- Manually: The red and infrared LED intensities can be manually adjusted independently using two potentiometers (Helipot). This permits the use of any desired light intensity within the limits stipulated for test and research purposes.
- Automatically: DC voltage as the input signal controls the LEDs so that the DC voltages at the computer input for both wavelengths are 2.0 ± 0.5 V. Outside this range the control circuit changes the LED currents to reset the DC voltages to 2.0 V. This setting is used for normal clinical applications.

To prevent skin damage from overheating even in the event of electronic component failure, maximal LED intensity is limited by an electronic circuit.

- Input amplifier and sample-and-hold stages
  Using operational amplifiers the photocurrent supplied by the photodiodes is converted to a voltage and then amplified. Six switch positions permit amplifications of 50 mV/nA to 5 V/nA. Afterwards, three sample-and-hold (S&H) stages – switched by the corresponding signals from the control stage – resolve the signals into the three components infrared, red and dark. The dark currents are then subtracted from the red and infrared signals in a subtraction stage which also eliminates small ambient light components that may have reached the photodiodes.
- Filters
  Using low-pass filters the discrete-time signals at the S&H output are reconverted to continuous-time signals and trimmed of high-frequency components using eighth-order Bessel filters with a cut-off frequency of 7 Hz. The DC components are then separated using a low-pass filter with a cut-off frequency of 0.1 Hz. The AC components are passed to a further Bessel high-pass 0.7 Hz filter for separation of slow motion artifacts, and then to a 40-fold amplification stage. The four signals $DC_{ir}$, $DC_{red}$, $AC_{ir}$ and $AC_{red}$ are thus available at the output. As oxygen saturation is calculated from the ratios $(ac/dc)_{ir}$ and $(ac/dc)_{red}$, it was essential to ensure by careful component selection that the amplifications for the amplification and separation stages were as near as possible identical for both wavelengths.
- Patient insulation
  For patient protection, the LED controller output stage and photodiode input stage were electrically isolated from the mains using Burr & Brown isolation amplifiers. These units were powered by an insulated power pack.
- Heating
  Sensors incorporating a resistance coil were fitted with a precision controller stabilizing temperature within the range 38.0–41.0 °C to an accuracy of 0.1 °C.
- Vacuum pump
  The sensor is fixed to the skin using a small pump producing a maximal -300 mbar vacuum. The pump

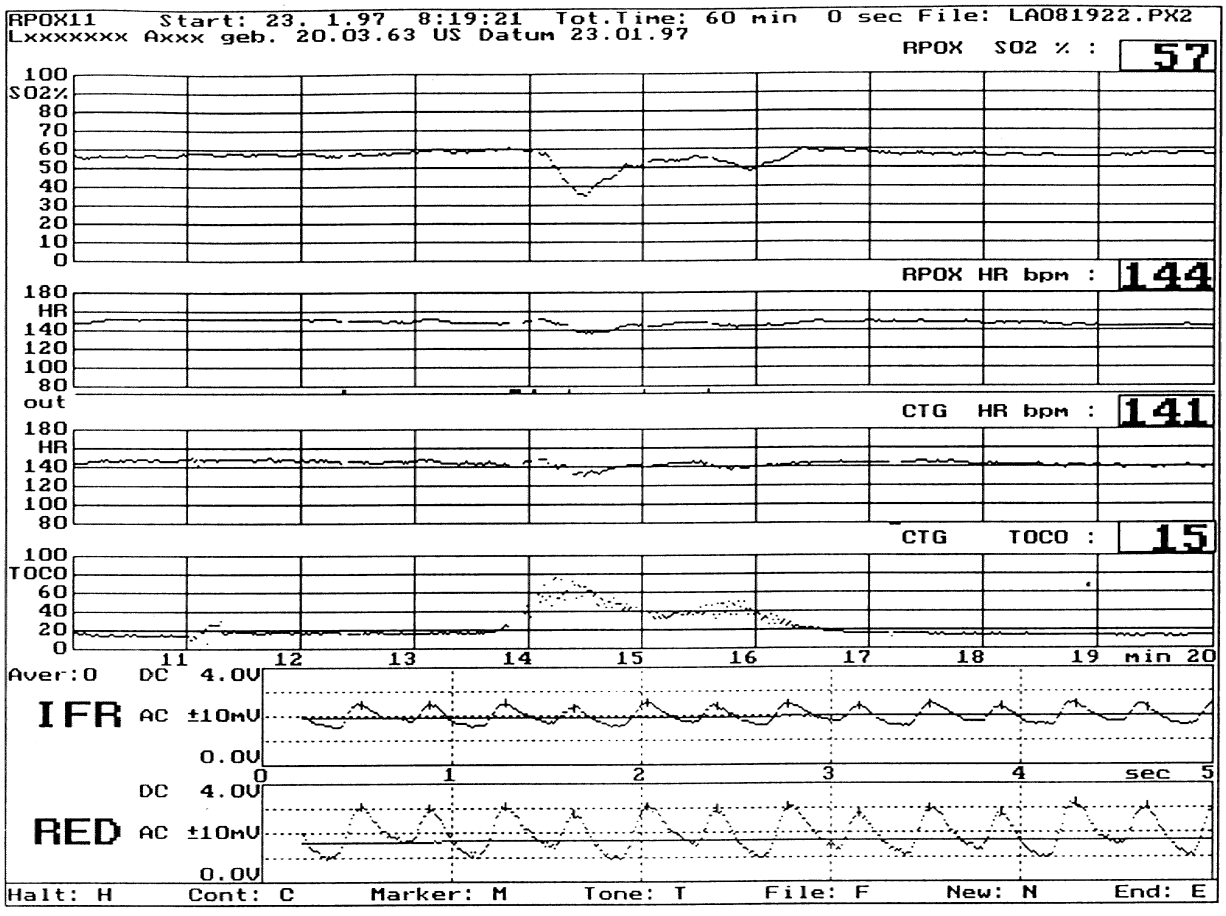


*Fig. 3. Screen display of a 10-minute measurement. From top to bottom: oxygen saturation, heart rate, heart rate from HP CTG monitor, uterine contraction from HP CTG monitor. Underneath the DC and AC signals for infrared and red light for the last 5 seconds (note the different ordinate scales for DC and AC).*

is maintained electronically via a manometer at a preset negative pressure. In normal medical use, adequate fixation is achieved with a vacuum of about −100 mbar.

### *Software*

Apart from various test programs, a program for data acquisition, display, calculation and storage and a program for subsequent data postprocessing were written in PASCAL.

- Signal acquisition, calculation and display
  For data acquisition a 486 DOS computer was equipped with a 12-bit analog/digital conversion (ADC) card (Metrabyte). A counter on this card triggers analog/digital conversion at 400 Hz, which starts an interrupt program in the computer for reading the 4 measured values $DC_{ir}$, $DC_{red}$ and $AC_{ir}$, $AC_{red}$ into a cyclic buffer of 5-second length. From the signal ($AC_{ir}+AC_{red}$) the maxima and minima are determined for each cardiac cycle, and hence the instantaneous heart rate. Oxygen saturations are calculated from the amplitudes ac and dc of the AC and DC signals.
  Saturation is calculated from the Lambert-Beer law using the absorption coefficients [11] for the nominal wavelengths of our LEDs. However, as the actual wavelengths may deviate from these nominal values and the applicability of the Lambert-Beer law is limited by scattering in tissue, experimental

calibration of the measured saturation values is essential.

Saturation and heart rate can be averaged over 1–9 cardiac cycles and are displayed every second. Analog heart rate and uterine contraction signals from any CTG monitor with analog output (e.g. Hewlett Packard model 8040) can be input to the ADC every second and likewise displayed.

The measurement display (Figure 3) shows, along the bottom, the 4 measured values $DC_{ir}$, $DC_{red}$ and $AC_{ir}$, $AC_{red}$, over the last 5 seconds of measurement. This serves to monitor signal quality during acquisition. Poor-signal periods can be marked and excluded from data processing. Along the top, measured arterial oxygen saturation and heart rate values per second are displayed cyclically over a 10-minute interval, with the CTG heart rate and contraction input underneath. Any time point can be marked for subsequent identification and all values and comment stored in a file at any time.

- Data analysis

  The values from a stored file can be redisplayed in measurement mode using an evaluation program. Time intervals can be marked with the arrow keys or mouse. Means and standard deviations – including the CTG data – are then calculated and displayed.

## MEASUREMENTS AND DISCUSSION

Clinical application of any new instrument or measurement system presumes:

– mechanical reliability, accuracy and calibration,
– feasibility in the clinical situation, including acceptance by both medical personnel and patients,
– the ability not only to determine physiological parameters not previously measured in both physiological and pathological situations, but also to evaluate the diagnostic significance of such parameters, in this case oxygen saturation.

For the first two more technical points is to say, that our instrument required calibration before clinical use, together with field tests of the suction device and long-term oximeter performance during birth.

For these points controls and clinical trials were performed in our own unit and with colleagues in Copenhagen (DK), Graz (A), Oulu (SF) and Berlin (D). The major investigations comprised:

### *Calibration*

To calibrate a pulse oximeter, an oxygen saturation value must be assigned to the measured variables

$$R = r_{red}/r_{ir} = (ac/dc)_{red}/(ac/dc)_{ir} \qquad \text{cf (7)}$$

on the basis of an experimental or theoretical relationship. Initially we used the absorption coefficients of Zijlstra *et al* [11]. The general problems of calibrating a pulse oximeter have been discussed elsewhere [12, 13]. For fine calibration we performed the following investigations:

- Tests in the arterial oxygen saturation range 88–100% were conducted in 14 healthy adult volunteers breathing normal air and then air with approximately 80% normal oxygen content for 10 minutes in each case. The reflection sensor was fixed to the forehead or sternum with an adhesive ring. Owing to the invasive nature of arterial catheterization, reference values were provided by a MINOLTA PULSOX 8 transmission pulse oximeter attached to the index finger. Data analysis [13] showed a 4.5% difference in oxygen saturation between the MINOLTA and the preliminary results of our reflectance system based on the absorption coefficents of Zijlstra et al.
- At lower saturation levels, measurements were performed in cyanotic children before surgery. The children had arterial lines, permitting direct comparison with arterial blood readings [14].
- Low saturations *in vivo* can also be measured in the fetal lamb [15]. We used this method to compare our pulse oximeter readings directly with arterial values in the oxygen saturation range 10–80% [16].

Preliminary evaluation of these data shows that our previous calculations of oxygen saturation have to be corrected in the 10-100% saturation range by a factor of 1.045.

### *Fixation*

The first experiments in sensor fixation to the head and other parts of the human body were performed in adults [17] and neonates [18].

Attachment is simple in practice, even during birth. After rupture of the membranes, the sensor can be fixed to the fetal head once the cervix has dilated to at least 2 cm. Initial fixation takes 30–60 seconds and allows full freedom of movement [19].

Approximately 100 mbar is the most suitable pressure

APL_MAS_ITC_00372046
RX-0487.0009



Masimo Ex. 1036
IPR Petition - US D947,842

at which to maintain the sensor as it ensures good sensor-skin contact and reliable continuous fetal oxygen saturation values. Measurements at two different sites of the head of the fetus have shown no significant differences in the oxygen saturation values, indicating no effect of suction on the local blood supply. The same we have observed in the case of caput succedaneum [20].

### *Long-term performance*

Vacuum fixation did not impair oxygen measurement, even over fixation periods of 4.3 hours [20]. Suction marks had disappeared normally within 10 to 20 minutes after removal of the sensor for neonates [18] and for fetuses.

### *Heating*

AC signals at 41.0 °C are twice as strong as in the unheated state [21]. However, the silicone rubber sensors required for vacuum fixation in fetal monitoring cannot be fitted with a heating coil as silicone is a poor conductor of heat.

## CONCLUSIONS

A proprietary reflectance pulse oximeter for obstetric use has been field-tested both in Zurich and several other centers in terms of calibration, stability of fixation, duration of use, and sensor warming. It has also been used to determine the effect of normal birth on fetal arterial oxygen saturation by monitoring throughout the various stages and comparing the results with cord blood and pH. The data demonstrate the reliability of our reflectance pulse oximeter for intrapartum arterial oxygen saturation monitoring, which is the precondition for further clinical evaluation.

Part of this work was supported by the Swiss National Science Foundation No 3200-040306 and by the "YDE-Foundation."

## REFERENCES

1. Severinghaus JW, Astrup PB. History of blood gas analysis, VI. Oximetry. J Clin Monit 1986; 2: 270–288
2. Huch R, Ullrich GJ, König V, Huch A. Reflectance pulse oximetry – potentials and problems. In: Ehrly et al. (eds). Clinical oxygen pressure measurements III. Berlin: Blackwell Ueberreuter Wissenschaft 1992: 14–31
3. Mendelson Y, Kent JC, Yocum BL, Birle MJ. Design and evaluation of a new reflectance pulse oximeter sensor. Med Instr 1988; 22: 167–173
4. Johnson N, Johnson VA, Fisher J, Jobbings B, Bannister J, Lilford RJ. Fetal monitoring with pulse oximetry. Br J Obstet Gynaecol 1991; 98: 36–41
5. Knitza R,Buschmann J, Rall G. Ein neues Verfahren zur kontinuierlichen Messung der fetalem Sauerstoffsättigung sub partu. Geburts Frauenheilk 1992; 52: 319–321
6. Dildy GA, Clark SL, Loucks CA. Preliminary experience with intrapartum fetal pulse oximetry in humans. Obstet Gynecol 1993; 81: 630–635
7. Hypoxische Gefährdung des Fetus sub partu. In: Knitza R (ed). Darmstadt: Steinkopf 1994
8. Wukitsch MW, Petterson MT, Tobler DR, Pologe JA. Pulse oximetry: Analysis of theory, technology and practice. J Clin Monit 1988; 4: 290–301
9. Graaff R. Tissue optics applied to reflectance pulse oximetry. Thesis Rijksuniversiteit Groningen The Netherlands 1993
10. Steinke JM, Shepherd AP. Role of light scattering in whole blood oximetry. IEEE Trans Biomed Eng 1986; BME-33: 294–301
11. Zijlstra WG, Buursma A, Meuwsen-van der Roest WP. Absorption spectra of human fetal and adult oxyhemoglobin, carboxyhemoglobin and methemoglobin. Clin Chem 1991; 37: 1663–1638
12. Yount JE. Practical aspects of calibrating fetal pulse oximetry. In: Knitza R (ed). Hypoxische Gefährdung des Fetus sub partu. Darmstadt: Steinkopff 1994: 45–82
13. König V, Huch R, Huch A. Wie kann ein Pulsoximeter kalibriert werden? In: Knitza R, ed. Hypoxische Gefährdung des Fetus sub partu. Darmstadt: Steinkopff 1994: 111–116
14. Faisst K, König V, Fanconi D, Schmid ER, Huch A, Huch R. Kalibration eines Reflexions-Pulsoximeters. Biomed Tech 1996; 41 (Ergänzungsband): 508–509
15. Dassel AC, Graaff R, Aarnoudse JG, Elstrodt JM, Heida P, Koelink MH, de Mul FF, Greve J. Reflectance pulse oximetry in fetal lambs. Pediatr Res 1992; 31: 266–269
16. Carter AM, Stiller R, König V, Jörgensen JS, Svendsen P, Huch R, Huch A. Calibration of a reflectance pulse oximeter for arterial oxygen saturations below 70% (to be published)
17. König V, Ullrich GJ, Faisst K, Joergensen JS, Huch R, Huch A. Reflexions-Pulsoximetrie – Untersuchungen mit eigenem Mess-System. Biomed Tech 1992; 37: 39–40
18. Faisst K, Hannon W, Jörgensen JS, König V, Bucher HU, Huch A, Huch R. Reflectance pulse oximetry in neonates. Eur J Obstet Gynecol Reprod Biol 1995; 61: 117–122
19. Faisst K, König V, Huch A, Huch R. Reflexions-Pulsoximetrie mit Vakuum – Ein Beitrag zur Fixierung. In: Marius (ed). Fetale Pulsoximetrie sub partu, Bücherei des Frauenarztes. Stuttgart: Enke 1996; 50: 28–32
20. Faisst K, Kirkinen P, König V, Huch A, Huch R. Intrapartum reflectance pulse oximetry: Effects of sensor location and fixation duration on oxygen saturation readings. J Clin Monit 1997; 13: 299–302

21. König V, Ullrich GJ, Huch A, Huch R. Reflection pulse oximetry – experience in Zürich. In: Lafeber HN (ed). Fetal and neonatal physiological measurements. Amsterdam: Elsevier 1991; 111–117