UNITED STATES PATENT AND TRADEMARK OFFICE

BEFORE THE PATENT TRIAL AND APPEAL BOARD

MASIMO CORPORATION,

Petitioner,

v.

APPLE INC.,

Patent Owner.

Case No. *To Be Assigned*
U.S. Patent No. D947,842

DECLARATION OF R. JAMES DUCKWORTH, PH.D

I declare that all statements made herein on my own knowledge are true and that all statements made on information and belief are believed to be true, and further, that these statements were made with the knowledge that willful false statements and the like so made are punishable by fine or imprisonment, or both, under Section 1001 of Title 18 of the United States Code.

I reserve the right to supplement my opinions in the future to respond to any information, arguments, or positions Apple may raise, taking account of new information as it becomes available to me.

Dated: 3/8/2023

R. James Duckworth, Ph.D

TABLE OF CONTENTS

I. INTRODUCTION 1

II. INFORMATION AND MATERIALS CONSIDERED 1

III. EXPERIENCE AND QUALIFICATIONS 7

IV. SUMMARY OF OPINIONS 16

V. THE D'842 PATENT 18

A. Overview of the D'842 Patent 18

B. Photoplethysmography (PPG) Sensors 20

VI. LEVEL OF ORDINARY SKILL IN THE RELEVANT ART 22

VII. APPLICABLE LEGAL STANDARDS 24

A. Claim Construction 24

B. Obviousness 26

VIII. CLAIM CONSTRUCTION FOR THE D'842 PATENT 28

A. The Convex Curvature of the Claimed Arc-Shaped Portions Is Functional 34

B. The Arrangement of the Claimed Arc-Shaped Portions Is Functional 43

C. The Arrangement the Claimed Rectangles Is Functional 52

D. The Overall Circular Shape of the Claimed Sensor Is Functional 56

IX. TECHNICAL OPINIONS REGARDING OBVIOUSNESS FOR THE D'842 PATENT 58

A. Overview of the Prior Art 58

1. Paulke (Exhibit 1006 – PCT Appl. Pub. No. WO 2017/165532) 58

2. Yuen (Exhibit 1007 – U.S. Pat. Appl. Pub. No. 2019/0196411) 62

3. Fong (Exhibit 1008 – U.S. Pat. No. D827,831) 63

4. Bushnell (Exhibit 1009 – U.S. Pat. Appl. Pub. No. 2017/0086743) 65

5. Mendelson (Exhibit 1011 – U.S. Pat. No. 6,801,799) 66

B. GROUND 1: Obviousness Over Paulke and Mendelson 67

1. Motivation to Combine Paulke with Mendelson 68

C. GROUND 2: Obviousness Over Yuen, Mendelson, and Bushnell 75

1. Motivation to Combine Yuen with Mendelson and Bushnell 76

D. GROUND 3: Obviousness Over Fong, Mendelson, and Bushnell 85

1. Motivation to Combine Fong with Mendelson and Bushnell 86

X. CONCLUSION 96

Masimo Ex. 1014
IPR Petition - US D947,842

I, R. James Duckworth, Ph.D, declare and state as follows:

I. INTRODUCTION

1. I have been retained by Knobbe, Martens, Olson & Bear, LLP, counsel for Masimo Corporation ("Masimo"). I am making this declaration at the request of Masimo in connection with Masimo's petition for *inter partes* review ("IPR") of the claimed design (the "Challenged Claim") of U.S. Patent No. D947,842 (the "D'842 Patent"). I understand that this Declaration is being submitted in the above-captioned proceeding as Exhibit 1014.

2. I am being compensated for my work in this matter at my standard hourly rate for expert consulting services. My compensation in no way depends on the outcome of this proceeding. I have no financial interest in any of the parties to these matters.

II. INFORMATION AND MATERIALS CONSIDERED

3. I have been asked to provide technical expert opinions relating to the validity of the Challenged Claim of the D'842 Patent. In conducting the analyses and forming the opinions set forth in this Declaration, I have reviewed and considered the D'842 Patent's claim, specification, and file history, as well as numerous prior art references and other documents. I have reviewed and considered at least the following materials in preparing this Declaration:

- The D'842 Patent, including its claim, specification, and file history;

- Masimo's IPR petition regarding the Challenged Claim of the D'842 Patent;
- The references relied upon herein, including, but not limited to, Paulke, Yuen, Fong, Bushnell, Mendelson;
- The Declaration of Joel Delman (Exhibit 1003);
- The complaint from the parties' parallel design patent litigation in Delaware District Court (Exhibit 1005);
- Apple's public opening post-hearing brief from the parties' parallel ITC Investigation (Exhibit 1017);
- The public hearing transcript from the parties' parallel ITC Investigation (Exhibit 1021);
- The redacted opening expert report of Steve Warren, Ph.D. from the parties' parallel litigation in California District Court (Exhibit 1026);
- Any materials referenced directly or indirectly in my Declaration; and
- The information and materials identified in the following table:

Exhibit No.	Description
1001	U.S. Patent No. D947,842 ("the D'842 Patent")
1002	File History of U.S. Patent No. D947,842
1003	Declaration of Joel Delman
1004	*Curriculum Vitae* of Joel Delman

Exhibit No.	Description
1005	*Apple Inc. v. Masimo Corporation, et al.*, Complaint, No. 1:22-cv-01377 (D. Del.)
1006	PCT Appl. Pub. No. WO 2017/165532 ("Paulke")
1007	U.S. Pat. Appl. Pub. No. 2019/0196411 ("Yuen")
1008	U.S. Pat. No. D827,831 ("Fong")
1009	U.S. Pat. Appl. Pub. No. 2017/0086743 ("Bushnell")
1011	U.S. Pat. No. 6,801,799 ("Mendelson")
1015	*Curriculum Vitae* of R. James Duckworth, Ph.D.
1016	Scott Jung, "Medgadget Joins the Verily Baseline ProjectStudy, Part 2: The Tech," archived on October 27, 2017 by the Internet Organization's "Wayback Machine" at https://web.archive.org/web/20171027221742/https://www.medgadget.com/2017/10/medgadget-joins-verily-baseline-project-study-part-2-tech.html
1017	*Masimo Corp. et al. v. Apple Inc.*, Apple's September 14, 2022 Public Second Corrected Post-Hearing Brief, ITC Inv. No 337-TA-1276
1018	"Apple Watch Series 4: Beautifully redesigned with breakthrough communication, fitness and health capabilities," archived on September 12, 2018 by the Internet Organization's "Wayback Machine" at https://web.archive.org/web/20180912191250/https://www.apple.com/newsroom/2018/09/redesigned-apple-watch-series-4-revolutionizes-communication-fitness-and-health/
1019	"Your heart rate. What it means, and where on Apple Watch you'll find it," archived on January 23, 2019 by the Internet Organization's "Wayback Machine" at https://web.archive.org/web/20190123031906/https://support.apple.com/en-us/HT204666

Exhibit No.	Description
1020	"Apple Watch Series 4 – Health," archived on September 20, 2018 by the Internet Organization's "Wayback Machine" at https://web.archive.org/web/20180920103403/https:/www.apple.com/apple-watch-series-4/health/
1021	*Masimo Corp. et al. v. Apple Inc.*, June 6-10, 2022 Public Hearing Transcript, ITC Inv. No 337-TA-1276
1022	"Charge Apple Watch," https://support.apple.com/guide/watch/charge-apple-watch-apd2b717523a/watchos (last visited Mar. 6, 2023)
1023	"Apple Watch Magnetic Charging Cable (1 m)," https://www.apple.com/shop/product/MX2E2AM/A/apple-watch-magnetic-charging-cable-1m (last visited Mar. 6, 2023)
1024	U.S. Pat. No. 10,610,157 ("'157 patent")
1025	U.S. Pat. No. 10,627,783 ("'783 patent")
1026	*Masimo v. Apple*, Excerpts of Redacted Sept. 23, 2022 Opening Expert Report of Steve Warren, Ph.D., No. 8:20-cv-48 (CD Cal.)
1027	"Apple Watch Series 4 Teardown," https://www.ifixit.com/Teardown/Apple+Watch+Series+4+Teardown/113044 (last visited Mar. 6, 2023)
1029	K192415 510(k) Summary for Verily Study Watch, https://www.accessdata.fda.gov/cdrh_docs/pdf19/K192415.pdf (last visited Mar. 6, 2023)
1030	U.S. Pat. No. 10,912,501 ("the '501 patent")
1031	Y. Mendelson et al., "Measurement Site and Photodetector Size Considerations in Optimizing Power Consumption of a Wearable Reflectance Pulse Oximeter," Proceedings of the 25th IEEE Conference (2003)
1032	U.S. Pat. No. D753,510

Exhibit No.	Description
1033	U.S. Pat. No. D782,537
1034	U.S. Pat. No. D735,131 ("the '131 patent")
1035	Chinese Design Reg. No. 303285726
1036	Konig et al., *Reflectance Pulse Oximetry – Principles and Obstetric Application in the Zurich System*, 1998 ("Konig")
1037	Yitzhak Mendelson, *Invasive and Noninvasive Blood Gas Monitoring*, 1991 ("Mendelson-1991")
1038	*Masimo Corp. et al. v. Apple Inc.*, Public Excerpts of Apple's June 6, 2022 Opening Presentation, ITC Inv. No 337-TA-1276
1039	U.S. Pat. No. D816,524
1040	*Masimo Corp. et al. v. Apple Inc.*, Excerpts of Public Final Initial Determination on Violation of Section 337, ITC Inv. No 337-TA-1276
1041	U.S. Pat. No. 10,912,502 ("the '501 patent")
1042	U.S. Pat. No. 10,945,648 ("the '648 patent")
1043	N. Meziane et al., Dry Electrodes for Cardiography, Physiological Measurement 34 (2013) ("Meziane")
1044	U.S. Pat. No. 6,265,789 ("Honda")
1045	*Apple Inc. v. Masimo Corporation, et al.*, Masimo's (Public) Opposition to Apple's Motion for an Expedited Trial, No. 1:22-cv-01377 (D. Del.)
1046	*Apple Inc. v. Masimo Corporation, et al.*, Public Excerpt of January 30, 2023 Declaration of James Malackowksi in Support of Apple Inc.'s Motion for an Expedited Trial, No. 1:22-cv-01377 (D. Del.)
1047	U.S. Pat. No. 6,091,530 ("Duckworth")
1048	U.S. Pat. No. 6,075,755 ("Zarchan")

Exhibit No.	Description
1049	Y. Mendelson, "A Wearable Reflectance Pulse Oximeter for Remote Physiological Monitoring," Proceedings of the 28th IEEE (2006)
1050	Y. Mendelson, "Wearable Wireless Pulse Oximetry for Physiological Monitoring," PPL Workshop (2008)

4. In preparing this Declaration, I have considered my own knowledge and experience, including my work in the fields of electrical engineering and wearable sensor development; my experience teaching within those subjects; my experience working with others involved in those fields; and the materials identified herein. I understand my analyses and opinions, including my review of any materials cited herein, should be made from the perspective of one of ordinary skill in the art related to the D'842 Patent at the relevant time (i.e., a "POSITA"). I understand the relevant time is June 27, 2018. Accordingly, my analyses and opinions are made from that relevant perspective. My testimony herein refers to the knowledge of a POSITA as of June 27, 2018, unless indicated otherwise. I discuss the level of ordinary skill in the relevant art further in Section VI of this Declaration, below.

5. Any figures appearing in this Declaration were prepared with the assistance of counsel and reflect my understanding of the D'842 Patent and the

materials discussed herein. Coloring and colored annotations to figures in my Declaration have been added unless I have indicated otherwise.

III. EXPERIENCE AND QUALIFICATIONS

6. My academic and professional background is in electrical and computer engineering. I obtained a Bachelor of Engineering degree in Electrical and Electronic Engineering from the University of Bradford and a Ph.D. Degree in Electrical and Electronic Engineering from the University of Nottingham. My Ph.D. thesis work concerned increasing the speed of data processing using multiple processing elements to complete computations in parallel and triggering computations based on the availability of data. After completing my Ph.D., I was a lecturer in the university's Computer Science Department for two years.

7. For more than 40 years, I have studied, designed, and worked in these fields. My experience includes over 35 years of teaching and research, including in the fields of pulse oximetry and other physiological monitoring technologies, low powered wireless sensor design, embedded system design, wearable technology, and indoor location tracking for first responders, among others.

8. I have been a professor of electrical and computer engineering at Worcester Polytechnic Institute ("WPI") for over 35 years. I joined WPI in January 1987 as an Assistant Professor of Electrical Engineering and was an Associate

Professor of Electrical and Computer Engineering from July 1991 to June 2021. Presently, I am a Professor Emeritus of Electrical and Computer Engineering at WPI.

9. More recently, my research work has centered on Precision Personnel Location (PPL) for first responders. This project started as a result of a tragic incident in Worcester in 1999, when six firefighters lost their lives in a warehouse fire. The overall goal of the PPL project is to protect the lives of emergency responders and to enhance their ability to accomplish their missions through research and development of systems for personnel location and tracking, movements, physiological and environment status monitoring, and command and control. The PPL project brought together diverse technical capabilities from other centers and laboratories at WPI to address important problems for emergency responders, the most critical of which is precise location and path tracking for each person in a building.

10. For over 30 years, I developed and taught courses at WPI relevant to wearable health sensors and devices like the one claimed by the D'842 Patent (i.e., Apple Watch Series 4). The classes I developed and taught included associated laboratory exercises and projects, which I also developed. As reflected in my curriculum vitae (Exhibit 1015), I developed and taught at least the following relevant courses: (1) Microprocessor System Design; (2) Modeling and synthesis of digital system using Verilog and VHDL; (3) VHDL for Modeling and Synthesis; (4)

Computer System Design; (5) Multi-processor and Distributed Systems; (6) Advanced Computer System Design; and (7) Advanced Digital System Design with FPGAs. All of these courses pertain to the sensor technology underlying the device (Apple Watch Series 4) depicted in the D'842 Patent. For example, the "Advanced Digital System Design with FPGAs" course required students to interface peripheral sensors such as a light sensor with an analog-to-digital converter to read information from the sensors and a digital-to-analog converter to convert sensed data into waveforms for processing.

11. In the course of my work at WPI, I have advised hundreds of engineering students in B.S. and M.S. programs and advised or co-advised approximately ten Ph.D. students that have completed Ph.D. degrees.

12. Additionally, I have authored or co-authored dozens of technical papers in refereed journals and conference proceedings and given many conference presentations in the fields I have taught, researched, and worked.

13. Aside from my work at WPI, I have years of experience working with portable, battery-powered electronic devices and sensors. During leave in approximately 2000 from WPI, I was the Vice President of Engineering for Adaptive Instruments. At Adaptive Instruments, I was responsible for designing and manufacturing a line of wireless industrial sensors for use in industrial process control. As a consultant, I helped program a small, battery-powered device used to

count the number of times an inhaler had been used. Also as a consultant, I helped design and program a wrist-worn device that reminded the user throughout the day of the medications that needed to be taken. My work on the wrist-worn device led to the patent I obtained on a "Low Power Infrared Communication System," U.S. Patent No. 6,091,530, a copy of which is included as Exhibit 1047. This wearable electronic device had some similar functionality to the consumer product underlying the design claimed in the D'842 Patent (i.e., Apple Watch Series 4). The wearable electronic device in my '530 patent was worn like a watch, provided watch functionality on a display, was battery powered, contained a microcontroller to calculate and display messages, employed an optical data communication system, and incorporated buttons for user control. Exhibit 1047, Abstract, col. 2:7-17. The system included a cradle shaped complimentary to the watch for data communication: "The cradle housing 104 is preferably shaped configured to receive and align the case of the watch 102 so that, when the watch 102 is placed in the shaped nest provided by 104, the watch IR emitter 110 is thereby aligned in close proximity with the cradle IR detector 112." *Id.*, 4:38-42. This device from my '530 patent is shown below.

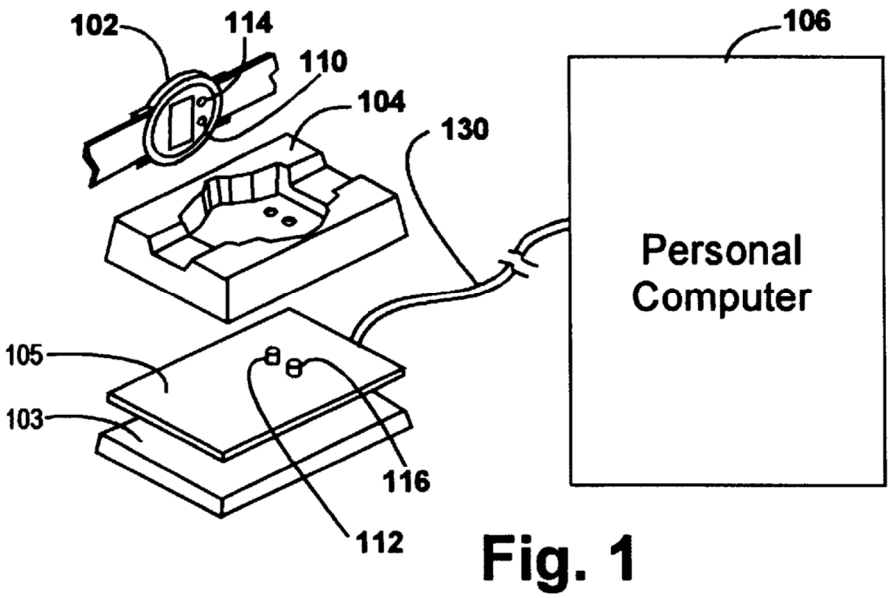

Fig. 1

Id., Fig. 1.

14. My technical work also contributed to features in the same device shown in U.S. Patent 6,075,755, which is titled "Medical Reminder System and Messaging Watch," and a copy of which is included as Exhibit 1048. As in my '530 patent above, the device from the '755 patent incorporated a display with watch functionality (LCD display 110), was battery powered, contained a microcontroller to calculate and display medication reminder messages, employed an optical data communication system (infrared emitter and detector 116), and incorporated buttons (120, 122, 124, 126) for user control. Exhibit 1048, 6:28–65. Figures 1 and 4 from the '755 patent are shown below.

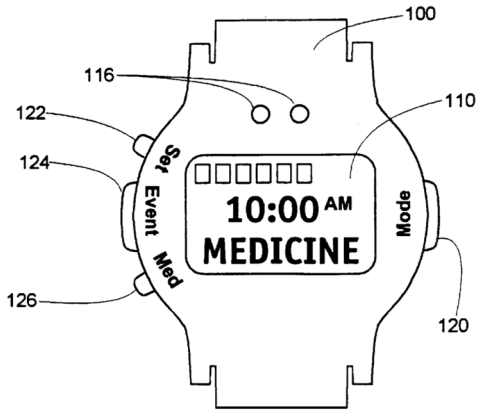

Fig. 1

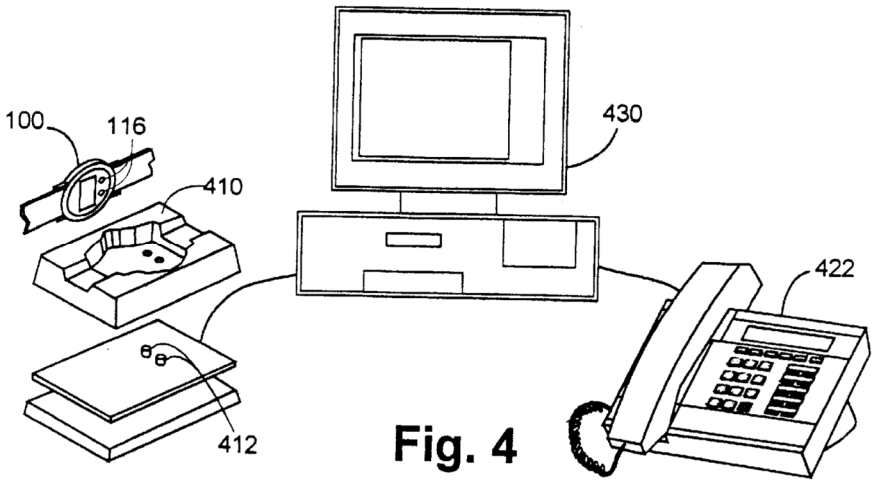

Fig. 4

Id., Figs. 1, 4.

15. From 2005 through 2008, I worked extensively with my colleague at WPI, Professor Yitzhak Mendelson, Ph.D. (the inventor of the Mendelson patent (Exhibit 1011) discussed in Section IX), to research, publish papers about, design, and make, wearable pulse oximetry devices. One publication stemming from this work is titled "A Wearable Reflectance Pulse Oximeter for Remote Physiological Monitoring," a copy of which is included as Exhibit 1049. As stated in that publication, our wearable pulse oximeter measured arterial oxygen saturation (SpO_2)

and utilized the principle of photoplethysmography: "Pulse oximetry also relies on the detection of photoplethysmographic (PPG) signals produced by variations in the quantity of arterial blood that is associated with periodic contractions and relaxations of the heart." Exhibit 1049, 1. As shown below, our pulse oximeter incorporated a photodiode, a red LED, and an infrared LED.

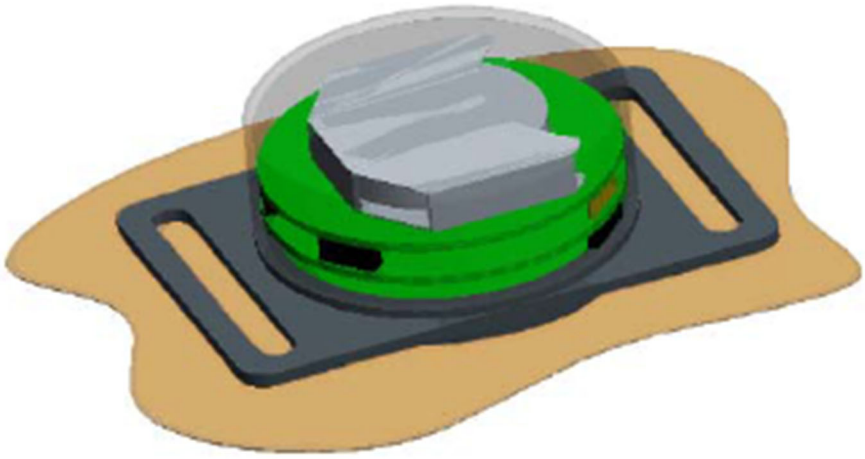

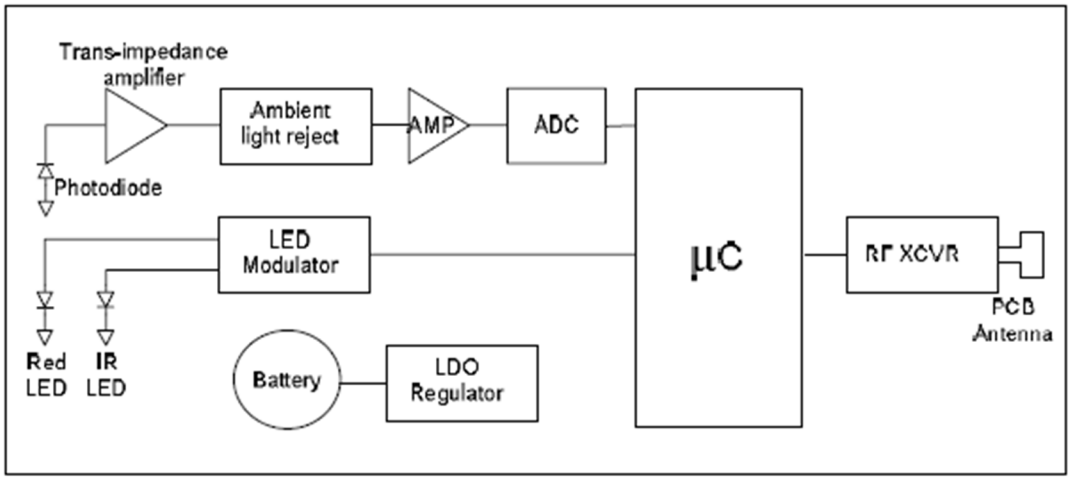

Id., 2.

16. Subsequently, in July 2007, Professor Mendelson and I formed a company together called Advanced Body Sensing to design, develop, and build a

new, wireless, battery powered, forehead-mounted reflectance pulse oximetry device. To meet these design goals, we had to develop a completely new device, as our prior work concerned prototype devices that required an external power supply and additional instrumentation to operate. Together, Professor Mendelson and I developed, along with a small team of engineers, a new housing, optical sensor, and associated electronics, including the design and programming of microprocessor and wireless transmission components. Our design and development process led us to the final forehead-mounted pulse oximetry device shown below.

Exhibit 1050, 24 (annotated).

17. Our device included an optical biosensor with two LED's and a photodetector, as highlighted above. Over the course of 2007 and 2008, Advanced Body Sensing received over $1,000,000 to develop and build the above pulse oximetry devices for the United States Air Force. The device above was designed to be "integrated into a headband or a helmet" (Exhibit 1049, 2), such as for army

use, but the basic principle allows measurements on various skin surfaces of the body. On August 4, 2008, Professor Mendelson presented on our Advanced Body Sensing work, including the above device, at an annual international technology conference held at WPI called the PPL Workshop. A copy of his presentation, titled "Wearable Wireless Pulse Oximetry for Physiological Monitoring," is included as Exhibit 1050.

18. In addition to the patents discussed above, I am a named co-inventor on various other patents, including:

a. U.S. Patent No. 7,292,189, issued in 2007, titled "Methods and Apparatus for High Resolution Positioning";

b. U.S. Patent No. 9,476,963, issued in 2016, titled "Search and Rescue Method and System";

c. U.S. Patent No. 9,658,309, issued in 2017, titled "Precision Location Method and System"; and

d. U.S. Patent No. 9,846,042, issued in 2017, titled "Gyroscope Assisted Scalable Visual Simultaneous Localization and Mapping."

19. Above, I have provided a brief summary of my education and experience that I believe is most relevant to the analyses and opinions I have expressed in this Declaration. A copy of my curriculum vitae, which describes in

further detail my qualifications, responsibilities, employment history, honors, awards, professional associations, presentations, publications, and patents is included as Exhibit 1015.

IV. SUMMARY OF OPINIONS

20. I have conducted analyses leading to the opinions expressed in this Declaration. To summarize those opinions, it is my conclusion, from a technical point of view, that:

- The convex curvature of the arc-shaped portions claimed by the D'842 Patent is a primarily functional design element;
- The arrangement of arc-shaped portions claimed by the D'842 Patent is a primarily functional design element;
- The arrangement of rectangles claimed by the D'842 Patent is a primarily functional design element;
- The overall circular shape of the Apple Watch sensor claimed by the D'842 Patent is a primarily functional design element;
- The PPG sensor in FIG. 7 of Mendelson would be a suitable PPG sensor to use with the devices disclosed in Paulke, Yuen, and Fong;
- By June 2018, a POSITA would have been motivated to use Mendelson's FIG. 7 PPG sensor as the PPG sensor of Paulke, Yuen, and Fong to increase the signal-to-noise ratio, and thus the accuracy,

of the sensor;

- By June 2018, a POSITA would have been motivated to extend the ends of the arc-shaped electrodes of Paulke, Yuen, and Fong to be closer together to maximize the surface area of that arc-shaped electrodes that contacts the user's skin;
- By June 2018, a POSITA would have been motivated to shape the arc-shaped electrodes of Paulke, Yuen, and Fong to avoid overlapping the wireless charging coil of the device and/or the wireless charging coil of prior art wireless chargers;
- By June 2018, a POSITA would have been motivated to combine Bushnell's convex housing component with the devices of Yuen and Fong to improve the signal strength of the device's PPG sensor; and
- By June 2018, a POSITA would have been motivated to combine Bushnell's convex housing component with the devices of Yuen and Fong to improve the contact or coupling between the device's PPG sensor and the user's skin and thereby achieve more accurate measurements.

21. Below, I provide the complete analyses supporting my opinions.

V. THE D'842 PATENT

A. Overview of the D'842 Patent

22. The D'842 Patent is titled "Electronic Device" and claims "[t]he ornamental design for an electronic device, as shown and described" in the solid lines of its nine figures. Exhibit 1001. As shown in the following colorized images, the D'842 Patent claims the design of two arc-shaped portions (gray) surrounding a circular array of rectangles (blue).

D’842 Patent Figures and Descriptions	
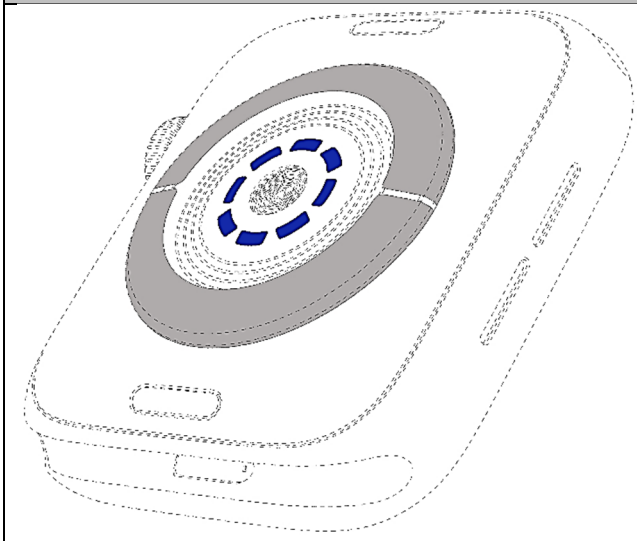 FIG. 2 “FIG. 2 is a bottom rear perspective view [of an electronic device showing the claimed design].”	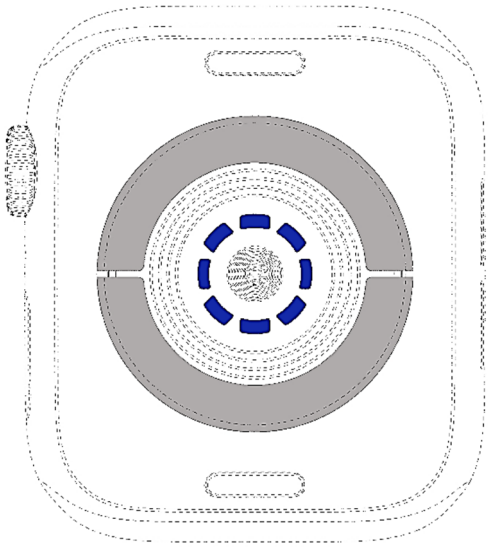 FIG. 4 “FIG. 4 is a rear view thereof.”
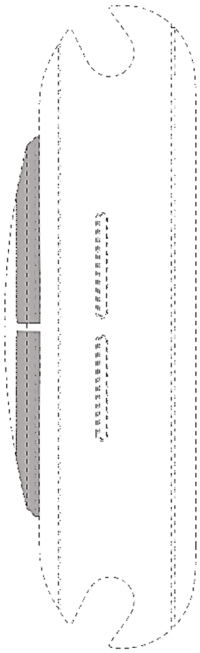 FIG. 5 “FIG. 5 is a left side view thereof.”	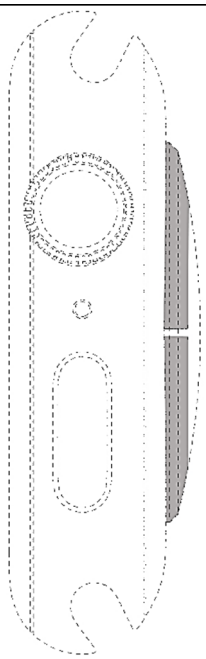 FIG. 6 “FIG. 6 is a right side view thereof.”

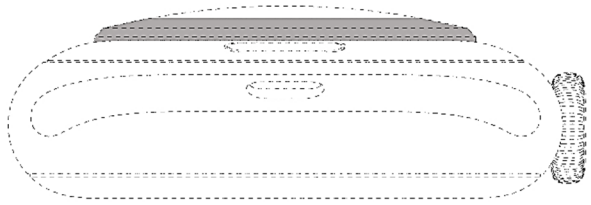 FIG. 7 "FIG. 7 is a top view thereof."	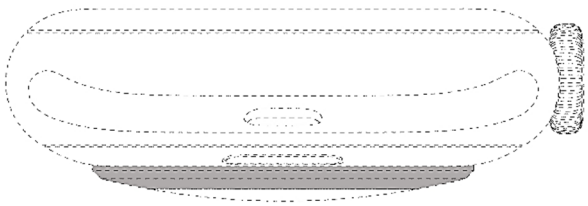 FIG. 8 "FIG. 8 is a bottom view thereof."

I have not included FIGS. 1, 3, or 9 of the D'842 Patent, which show views of the "front" of the electronic device, in the above table because nothing on the front the device is claimed. Exhibit 1001, FIGS. 1, 3, 9, Description.

23. As explained below in Section VIII, the D'842 Patent claims the arc-shaped electrodes and the circular array of eight photodiodes of the Apple Watch Series 4, which was released in September 2018, a few months after the purported June 2018 filing date of the D'842 Patent. The claimed photodiodes are part of the "optical heart sensor" inside the Apple Watch Series 4, which "uses what is known as photoplethysmography," or PPG, to measure a user's heart rate. Exhibit 1019, 2-3. By 2018, PPG sensors were a well-known technology used in wearable devices to measure health parameters like heart rate, as explained below.

B. <u>Photoplethysmography (PPG) Sensors</u>

24. PPG sensors are noninvasive devices for measuring health parameters of the user. PPG sensors commonly include LEDs to emit light at two wavelengths, often red and infrared, into the tissue. Exhibit 1011, 1:15-40. Red and infrared wavelengths are chosen because deoxyhemoglobin absorbs more light (i.e., has a

higher optical extinction coefficient) than oxyhemoglobin in the red region of the spectrum, whereas oxyhemoglobin absorbs more light than deoxyhemoglobin in the infrared region of the spectrum. *Id.*; *see id.*, FIG. 1.

25. The emitted red and infrared light enters the user's tissue, where some of the light is absorbed by the blood or other tissue, and some is not absorbed. The light that is not absorbed either passes through the tissue to a light detector (e.g., a photodiode) on the opposite side of the tissue from where the light entered (i.e., a "transmittance" PPG sensor configuration) or is reflected back to a light detector on the same side of the tissue from where the light entered (i.e., a "reflectance" PPG sensor configuration). *Id.*, 2:8-27. The light detector outputs what is known as a photoplethysmography (PPG) signal for each wavelength of received light—one PPG signal for red light, one PPG signal for infrared light. *Id.*, 1:42-2:7. The amount of blood in the user's arteries changes as the heart beats (systole) and relaxes (diastole). The beating of the heart permits each PPG signal to be separated into (1) a pulsatile (or "AC") signal component that is caused by arterial blood and (2) a non-pulsatile (or "DC") signal component that is primarily caused by bloodless tissue and residual blood when the heart is in diastole (i.e., veinous blood). *Id.* The device applies algorithms to the obtained AC and DC signal components to determine parameters, such as the user's heart rate or oxygen saturation. *Id.*; Exhibit 1007 ¶41

("The PPG sensor 118 may associate changes in light intensity with small variations in blood perfusion, and as a result, heart beats.").

26. I understand the level of skill in the art at the relevant time very well, as I developed and taught courses involving sensor design throughout that time and from my extensive work with my colleague at WPI, Professor Yitzhak Mendelson, Ph.D., the inventor of the Mendelson patent discussed herein (Exhibit 1011), to research, publish papers about, design, and make, wearable PPG sensor devices (specifically, pulse oximetry devices).

VI. LEVEL OF ORDINARY SKILL IN THE RELEVANT ART

27. I understand that the level of ordinary skill in the art for the D'842 Patent is determined as of June 27, 2018, which is the earliest purported filing date of the patent.

28. The field of art relevant to the D'842 Patent is noninvasive wearable devices, like Apple Watch, which measure health parameters (e.g., heart rate, electrical impulses, ECG, etc.). A person of ordinary skill in the art relating to the technical subject matter underlying the D'842 Patent would have had at least a Bachelor or Master of Science degree in electrical or biomedical engineering, or a comparable engineering discipline, in combination with at least two years of related work experience involving wearable physiological sensors. To design and develop wearable physiological sensor designs like the sensor claimed in the D'842 Patent,

a POSITA would have worked closely with a designer of ordinary skill in the art (a "DOSA"), such as an industrial designer or product designer, with a POSITA contributing from a technical perspective and a DOSA contributing from an industrial design perspective. I understand that Joel Delman is an experienced industrial designer that qualifies as a DOSA and is submitting a declaration (Exhibit 1003) in connection with this proceeding. I have therefore relied on Mr. Delman's discussions, analyses, and opinions from the perspective of a DOSA to support the discussions, analyses, and opinions I have set forth in my Declaration.

29. I understand the technical capabilities of a POSITA as of June 2018. Indeed, I possessed those capabilities myself before, during, and after that time. As a professor of electrical and computer engineering for over three decades, I have taught many such POSITAs and understand the level of knowledge and skill that persons with such academic experience would have possessed in June 2018. Through my education and decades of experience, such as teaching relevant engineering courses and working with Professor Yitzhak Mendelson in designing and developing pulse oximetry devices, I am familiar with what a POSITA would have understood in June 2018 and qualified to provide opinions from the perspective of a POSITA at the relevant time.

VII. APPLICABLE LEGAL STANDARDS

30. I am an electrical and computer engineer by training and profession. The opinions I express in this Declaration involve the application of my knowledge and experience to the evaluation of the D'842 Patent and certain prior art to the D'842 Patent.

31. Although I have been involved as a technical expert in patent matters before, I am not an expert in patent law. Therefore, I have been advised of certain principles of patent law applicable in this matter, which I have used in arriving at my determinations and opinions. The paragraphs below express my understanding of the legal requirements I have used in forming my opinions.

A. Claim Construction

32. I understand that in an *inter partes* review, a design claim should be construed in accordance with the ordinary and customary meaning of such claim as understood by one of ordinary skill in the art in view of the solid lines shown in the patent's figures, the description of those figures, and the prosecution history pertaining to the patent.

33. I understand that, while the preferable course for design patent claim construction is not to provide a detailed verbal description, using verbal or written guidance is beneficial in certain circumstances. I understand that using verbal or

written guidance to describe a claimed design is often helpful to point out various features of the claimed design as they relate to the prior art.

34. I understand that a design patent, unlike a utility patent, limits protection to the ornamental design of an article of manufacture. It is my experience that most articles and designs sold into the stream of commerce have some function or purpose. Where a design patent contains functional and ornamental elements, I understand that the scope of the claimed design is limited to the ornamental aspects alone and does not extend to functional elements. I further understand that, where a design contains both functional and non-functional (i.e., ornamental) elements, the scope of the design claim must be construed to identify the non-functional aspects of the claimed design. I understand that using verbal or written guidance to describe a claimed design is helpful to outline the distinction between ornamental and functional elements of the claimed design. I also understand that a claim to a design with numerous functional elements requires a narrow construction. I further understand that functional aspects may be factored out of the claimed design, and that claim construction and the design obviousness analysis should focus on only the non-functional aspects of the claimed design.

35. While I understand that a particular test has not been mandated for assessing the functionality of a claimed design, I understand that there are numerous factors to be considered in evaluating functionality. First, I understand that the

availability of comparable alternative designs is an important if not dispositive factor in evaluating the functionality of a claimed design. I also understand that if other designs would not produce the same or similar functional capabilities, or would not properly function with the claimed design, such other designs are not comparable alternative designs. Second, I understand that there are various other factors useful for assessing claim construction functionality, including: whether the claimed design represents the best design; whether alternative designs would adversely affect the article's utility; whether there are any concomitant utility patents; whether advertising touts particular design features as having specific utility; and whether there are any design elements or an overall appearance clearly not dictated by function. I also understand that where an element of a claimed design has been specifically designed to fit into, or mate with, some other article, the design element has been deemed functional.

B. <u>Obviousness</u>

36. I understand that a patent is invalid as obvious if the differences between the claimed invention and the prior art are such that the claimed invention as a whole would have been obvious, before the effective date of the claimed invention, to a person of ordinary skill in the art. I further understand that the obviousness analysis assesses (1) the scope and content of the prior art; (2) the level of ordinary skill in the art; (3) the differences between the claimed invention and the

prior art; and (4) secondary considerations nonobviousness (if present). For design patents, I understand that the ultimate obviousness inquiry asks whether the claimed design would have been obvious to a designer of ordinary skill in the art who designs articles of the type involved in the design patent at issue (a "DOSA").

37. In a design patent obviousness inquiry, I understand that the first step is to identify a single, "primary" reference with design characteristics that are "basically the same" as the claimed design. I understand that once a primary reference is found, secondary references may be used to modify the primary reference to create a design that has the same overall visual appearance as the claimed design. I understand that secondary references may only be used to modify the primary reference if they are so related to the primary reference that the appearance of certain ornamental features in one would suggest the application of those features to the other. I further understand that when a secondary reference is "so related" to the primary reference, the similarity in appearance among them is enough to motivate a designer of ordinary skill to combine features from one with features from the other. In addition to the relatedness of the prior art and claimed designs, I understand that other reasons could have motivated a designer of ordinary skill in the art to combine the features from a secondary reference with the features of the primary reference. Once the primary and secondary references have been combined, I understand that the design obviousness analysis asks whether the

combination design has the same overall visual appearance as the claimed design. I understand that comparing the prior art and claimed designs as a whole is what is important, and that *de minimis* or trivial differences between the claimed and combination designs cannot prevent a finding of obviousness.

38. Further, I understand that secondary considerations of nonobviousness should be considered if evidence of such considerations is present, and that such secondary considerations cannot overcome a strong case of obviousness.

39. I understand that an assessment of what a reference discloses or teaches—for purposes of an obviousness analysis—must be conducted from the perspective of one of ordinary skill in the art at the time of the invention. I also understand that something is only "inherent in," and therefore taught by, the prior art if it necessarily flows from the explicit disclosure of the prior art.

VIII. CLAIM CONSTRUCTION FOR THE D'842 PATENT

40. Below, I set forth my understanding of the design claimed by the D'842 Patent. My understanding of the claimed design is consistent with the understanding that a designer of ordinary skill in the art would have had at the relevant time. Exhibit 1003 ¶¶24, 39-42.

41. The D'842 Patent claims the design of two arc-shaped portions (gray) that protrude from the back of an electronic device and a circular arrangement of rectangles (blue) surrounded and spaced apart from the arc-shaped portions.

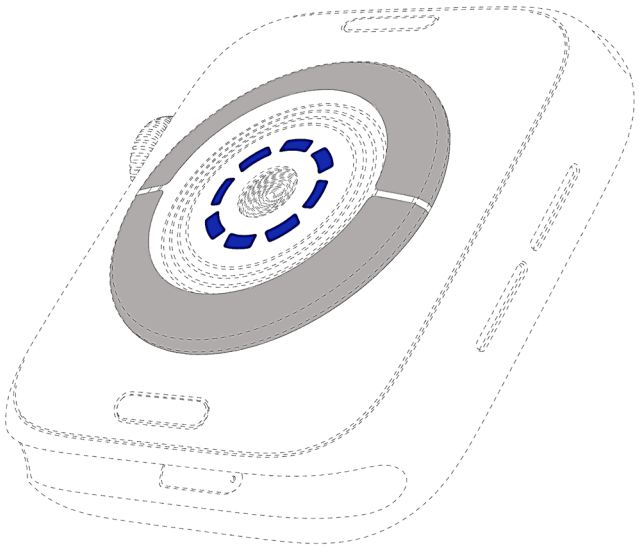

FIG. 2

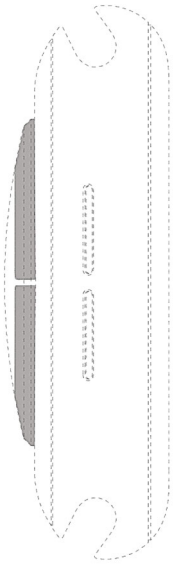

FIG. 5

Exhibit 1001, FIGS. 2, 5; Exhibit 1003 ¶39. As shown in cyan below, the outermost surface of the claimed arc-shaped portions has a convex curvature (i.e., is a convex surface).

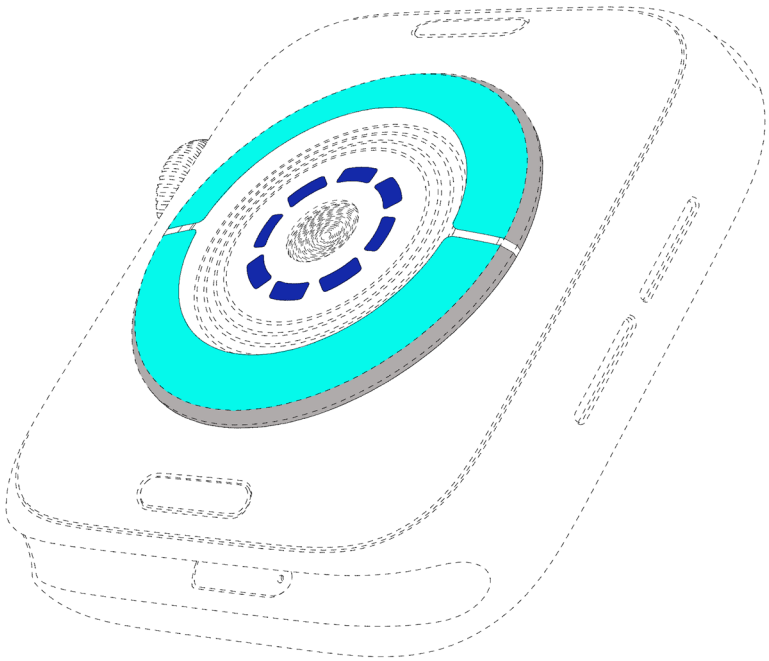

FIG. 2

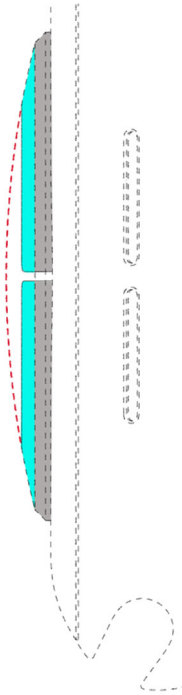

FIG. 5

Exhibit 1001, FIGS. 2 (annotated), 5 (excerpted, annotated); Exhibit 1003 ¶39. As shown above (right), the claimed (cyan) and unclaimed (red dotted line) parts of the convex surface, together, form a convex dome. *Id.* The claimed rectangles (blue) are included below the level of the arc-shaped portions' convex curvature (i.e., the claimed rectangles are included in an interior surface of the electronic device that is below the claimed convex curvature). *Id.*

42. In FIG. 2 of the D'842 Patent, shown below (left), between the convex curvature of each arc-shaped portion and the back of the electronic device, the patent depicts a sidewall consisting of a vertical edge and a chamfered edge. Exhibit 1001, FIG. 2; Exhibit 1003 ¶40. However, I understand that the sidewall of each arc-shaped portion is not claimed because it is drawn in broken lines as shown below (right).

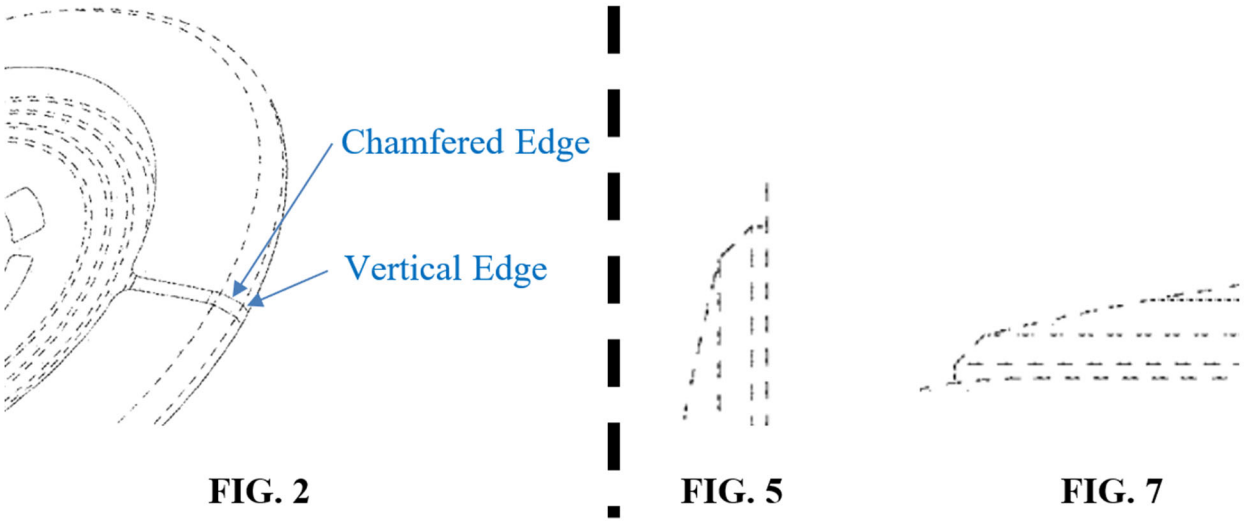

FIG. 2 **FIG. 5** **FIG. 7**

Id., FIGS. 2, 5, 7 (all excerpted and annotated), Description ("The broken lines in the figures … form no part of the claimed design."); Exhibit 1003 ¶40.

43. I understand that the D'842 Patent was purportedly filed in June 2018, Exhibit 1001, 2, and that Apple released the Apple Watch Series 4 in September 2018. Exhibit 1018. As shown in green in the below comparison, the arc-shaped portions claimed by the D'842 Patent depict the arc-shaped electrodes of Apple Watch Series 4; as shown in blue in the below comparison, the circular arrangement of rectangles claimed by the D'842 Patent depicts the circular arrangement of photodiodes of the optical sensor of Apple Watch Series 4.

Claimed Design (Exhibit 1001)	**Apple Watch Series 4**
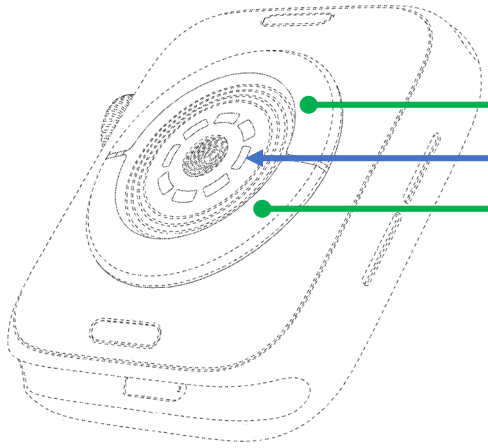 FIG. 2	Exhibit 1020, 5

Claimed Design (Exhibit 1001)	Apple Watch Series 4
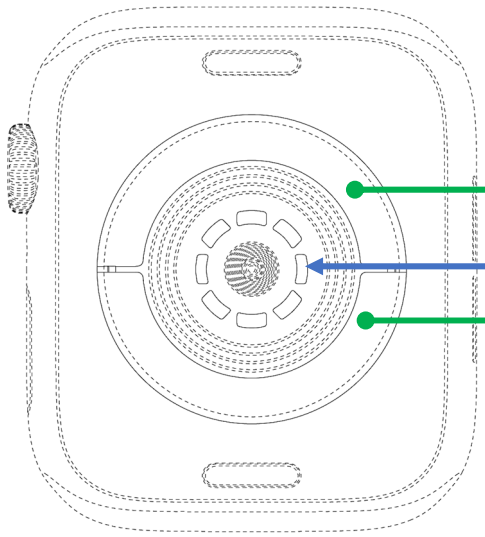 FIG. 4	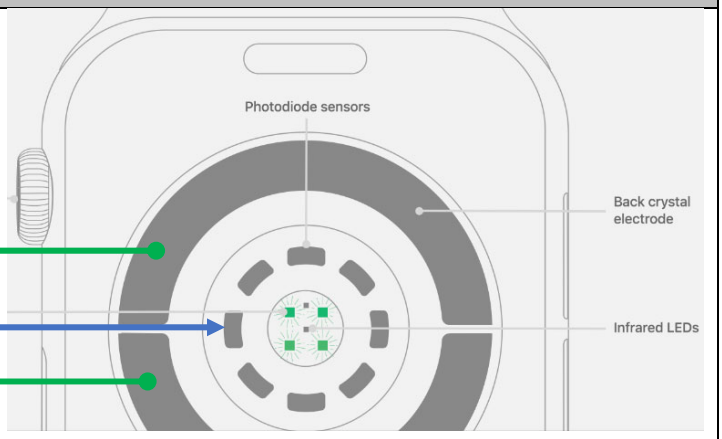 Exhibit 1019, 3
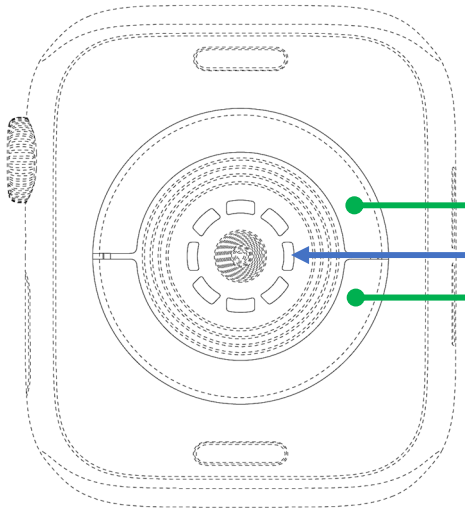 FIG. 4	Exhibit 1005, 2

Exhibit 1003 ¶41. This comparison shows: (1) the arc-shaped portions claimed by the D'842 Patent depict the "built-in electrode[s]" on the back of Apple Watch Series 4; and (2) the circular arrangement of rectangles claimed by the D'842 Patent depicts

the photodiodes that are part of the "optical heart sensor" inside the Apple Watch Series 4. Exhibit 1019, 2-3; Exhibit 1020, 5; Exhibit 1003 ¶41.

44. The arc-shaped electrodes of Apple Watch Series 4 are a functional element of its ECG sensor, and the photodiodes of Apple Watch Series 4 are a functional element of its optical sensor. The function of the arc-shaped electrodes is to measure electrical impulses across the user's chest. Exhibit 1019, 3. Further, the Watch's photodiodes are part of its optical sensor, which is a type of photoplethysmography ("PPG") sensor that is used to measure the user's heart rate. *Id.* ("The optical heart sensor in Apple Watch uses what is known as photoplethysmography" to measure the user's heart rate.). In use, the Apple Watch Series 4's PPG sensor emits light into the user's wrist. *Id.* After passing through (and being attenuated by) the user's wrist tissue, some of that light is reflected back to the Watch's PPG sensor, which receives it with eight "light-sensitive photodiodes." *Id.* The light received by the photodiodes is used by the Watch "to detect the amount of blood flowing through your wrist" and thereby determine the user's heart rate. Exhibit 1019, 2-3. The function of the Watch's photodiodes is, therefore, to receive the light that is used to calculate physiological measurements, such as heart rate. *Id.* Moreover, the claimed elements corresponding to the Apple Watch Series 4's electrodes and photodiodes (i.e., the arc-shaped portions and

rectangles claimed by the D'842 Patent), are functional design elements, as explained below.

A. <u>The Convex Curvature of the Claimed Arc-Shaped Portions Is Functional</u>

45. Apple confirmed during the parties' ITC investigation (Inv. No. 337-TA-1276, the "ITC Investigation") that the same "dome" or "curved" (i.e., convex) surface has been included on the back of every Apple Watch, starting with the 2015 release of the original Apple Watch (called "Series 0"). Exhibit 1021, 47:12-16 (explaining convex surface on back of Apple Watch "has been constant since the Series 0"), 46:22-23 ("The original Apple Watch, the Series 0, was released in 2015."). Apple admitted two "very practical reason[s] for that dome shape" of Apple Watch: (1) because that convex shape "fits snugly in the [wireless charging] cradle"; and (2) because that convex shape is designed to align the watch with the charging hardware components so that the charging can occur in an efficient way." *Id.*, 47:20-24. The development of Apple Watch's health sensors was led by Apple's "distinguished engineer," Brian Land. *Id.*, 954:15-955:9. And Mr. Land confirmed this functionality of the convex curvature on the back of every Apple Watch by testifying that this element of Apple Watch was designed to achieve two functions: (1) to mate with the charging cradle or "dock that has a complementary shape" and (2) to align the Watch's charging coil with that of its charger for "efficient wireless charging." *Id.*, 959:14-960:2. Consistent with these admissions from Apple, the

back of every Apple Watch has the same convex curvature (which is the curvature applied to the arc-shaped portions claimed in the D'842 Patent) so that the back of the Watch mates snugly with the complementary curvature of its charger, as shown in the annotated figure below.

Exhibit 1005, 7; Exhibit 1023, 2 (confirming every Apple Watch uses the same charger design that is shown above). A prior art Apple patent confirms the need to align the charging coil in the Apple Watch with the corresponding coil in the charger for efficient wireless charging. Exhibit 1025, FIG. 19, 45:18-28 (explaining, with reference to FIG. 19) that "the complementary geometries [of the Watch's back and its charging dock] may facilitate aligning of the [Watch] and dock for efficient wireless power transfer"). Thus, this evidence shows that the arc-shaped portions were designed with the convex curvature claimed in the D'842 Patent so that the

Apple Watch Series 4 underlying the claimed design could performed its intended functions of (1) mating snugly with the corresponding shape of its established charger design and (2) aligning with that charger for efficient wireless charging. The same evidence shows that an alternative design to the convex curvature claimed in the D'842 Patent was unavailable because arc-shaped portions with a different curvature would not mate snugly or precisely align with the concave curvature of the Watch's established charger design, which are needed for efficient wireless charging. *See, e.g.*, Exhibit 1005, 2; Exhibit 1001, FIGS. 5-8; Exhibit 1025, 42:63-43:4 (explaining "power transfer efficiency … may decrease as misalignment increases" between the Watch and its charging dock). That is, using a different curvature for the claimed arc-shaped portions would make the Watch incompatible with the established concave curvature of its charger. *Id.* Accordingly, the claimed arc-shaped portions' convex curvature is dictated by function because those arc-shaped portions must be designed as claimed to perform the intended functions of mating and aligning with the corresponding charger for efficient wireless charging.

46. Additionally, numerous other factors support the conclusion that the convex curvature of the arc-shaped portions is a functional element of the design claimed by the D'842 Patent, as explained below.

47. The claimed convex curvature of the arc-shaped portions is the best design for those elements because only that curvature allows the underlying article

(Apple Watch Series 4) to mate snugly and properly align with the complementary concave shape of the Watch's preexisting charger. Exhibit 1021, 47:20-24, 959:14-960:2, Exhibit 1005, 7; Exhibit 1025, FIG. 19, 45:18-28. Indeed, as discussed above, using a different curvature for the claimed arc-shaped portions would result in a worse design because such an alternative design would be incompatible with the established concave curvature of the Watch's charger. For example, using a different curvature for the arc-shaped portions would make the Watch-charger connection less secure, thereby allowing the Watch to become misaligned on the charger, which would impair or eliminate the Watch's ability to recharge. Exhibit 1025, 42:63-43:4 (explaining "power transfer efficiency … may decrease as misalignment increases" between the Watch and its charging dock); 45:18-28 (explaining how complementary curved Watch-back and charger surface geometries, like in FIGS. 18-19, enable "efficient wireless power transfer"), FIGS. 18-19).

48. Using a different curvature for the claimed arc-shaped portions could adversely affect the utility of the underlying article by harming or eliminating the Watch's ability to mate snugly and/or properly align with the complementary concave curvature of its established charger design, thus harming or eliminating the Watch's ability to be recharged and used. Exhibit 1021, 959:14-960:2 (Watch's charging dock (i.e., cradle) has a "complementary shape" to the Watch's "dome-

shape" "so that, when you place [the Watch] on the cradle, [the Watch] aligns itself well to the … charger for efficient wireless charging."); Exhibit 1025, 45:18-28 ("complementary geometries" of Apple Watch and its charger allow "efficient wireless power transfer"), 42:63-43:4 (explaining "power transfer efficiency … may decrease as misalignment increases" between the Watch and its charging dock). The Apple Watch underlying the D'842 Patent charges by mating snugly and aligning with the complementary curvature of its charger, as explained above, and thus the claimed convex curvature enabling the Watch-charger connection is needed for charging and therefore essential to the use of the Watch.

49. Apple also presents the convex curvature claimed by the D'842 Patent as having a particular utility for aligning the Watch with its charger. Apple's website, for example, indicates that the back of every Apple Watch has a convex curvature to mate with "[t]he concave end of the charging cable" and ensure the Watch and charger are properly aligned. Exhibit 1022, 1; *id.*, 1-3 (showing the back of every Apple Watch from Series 4 to the present mates and aligns with the concave end of the same charging cable).

50. Further, the functionality of the convex curvature of the arc-shaped portions claimed in the D'842 Patent is confirmed by multiple concomitant utility patents from Apple. For example, Apple filed U.S. Pat. No. 10,610,157 (the "'157 patent") in August 2018, just after the D'842 Patent but before the September 2018

launch of the Apple Watch Series 4. Exhibit 1024, Cover; Exhibit 1018, 1-2. And, as shown below, both the D'842 Patent and the '157 patent disclose the design of the article underlying both patents, which is Apple Watch Series 4 (as shown above in Section VIII).

D'842 Patent	'157 patent (Exhibit 1024)
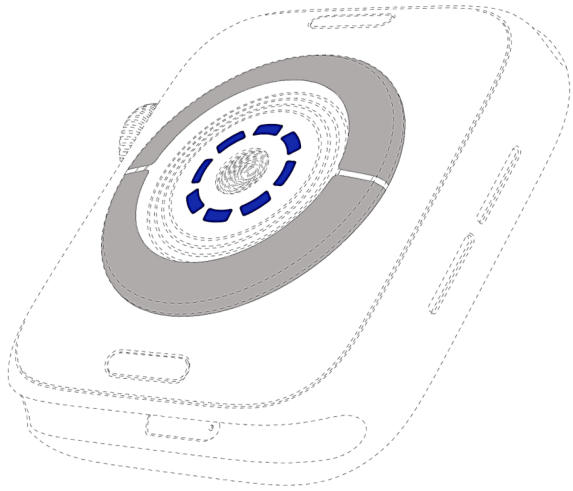 FIG. 2	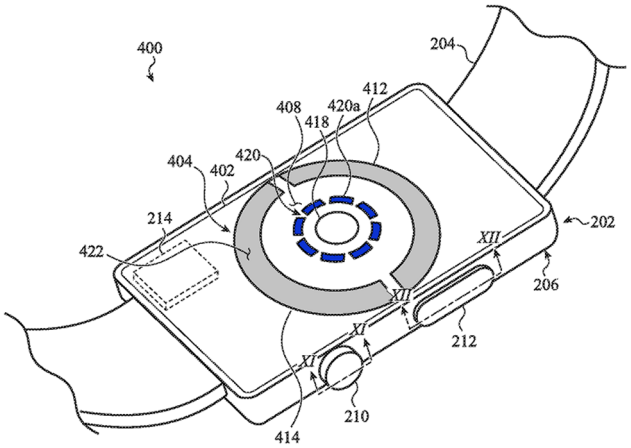 FIG. 4A 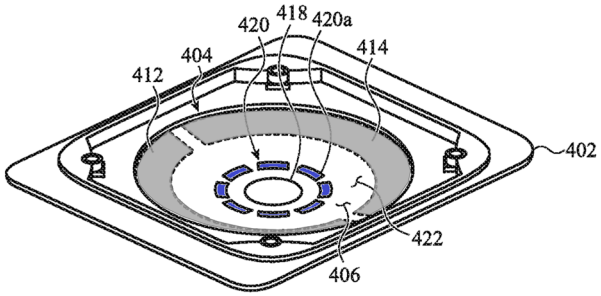 FIG. 4C

As shown in the table above, the D'842 Patent's claimed design (left) is depicted in FIGS. 4A and 4C of the '157 patent (right). The '157 patent explains that the device of FIGS. 4A-4C has a convex or "dome-shaped" carrier 404, which has a "surface 408 [that] protrudes or extends away from a back member 402 of the watch." Exhibit

1024, 12:67-13:3, FIGS. 4A-4C. The convex, protruding surface 404 disclosed by the ’157 patent includes “first and second electrodes 412, 414” that are “arc-shaped,” as shown above. *Id.*, 13:36-38, 13:21-24, FIGS. 4A, 4C, 5D. The ’157 patent even claims the convex surface and its arc-shaped electrodes. *Id.*, claim 15 (reciting first and second “arc-shaped electrode[s]” and “a carrier protruding from” the “electronic watch”). Apple’s ’157 patent, therefore, shows that the convex curvature of the arc-shaped portions claimed in the D’842 Patent is a functional design element.

51. Apple has another utility patent, U.S. Pat. No. 10,627,783 (the “’783 patent”), which shows that the convex curvature claimed in the D’842 Patent is for achieving the charging mating and alignment functions discussed above. The ’783 patent teaches to avoid misalignment between the Watch and its charging dock, because misalignment decreases “power transfer efficiency.” Exhibit 1025, 42:63-43:4. To avoid such problematic misalignment between the Watch and its charger, the ’783 patent teaches using “alignment assistance features to effect alignment of the [Watch] 100 with the dock 1802 along a mutual axis.” *Id.*, 43:10-15. The ’783 patent specifically teaches that “the bottom surface of the [Watch] 100 is convex and the top surface of the [charging] dock 1802 is concave, following the same curvature as the bottom of the [Watch] 100…. [to] facilitate alignment of the [Watch] and dock for efficient wireless power transfer,” as shown below in FIGS. 18-19. *Id.*, 45:18-

28, 43:28-32 (explaining that "protrusions and corresponding indentations … may be used to align [the Watch and its dock]"), 43:19-22, FIGS. 18-19.

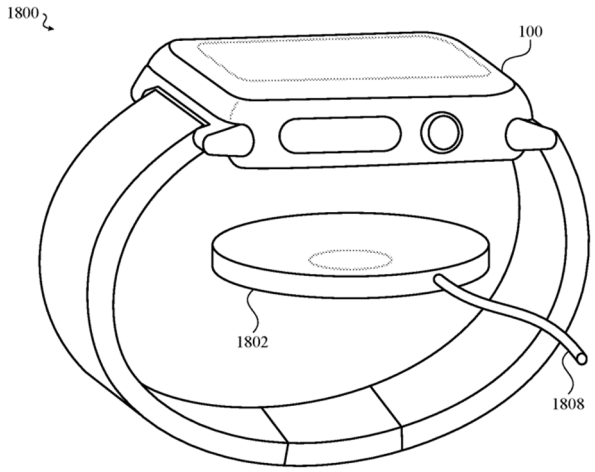

FIG. 18

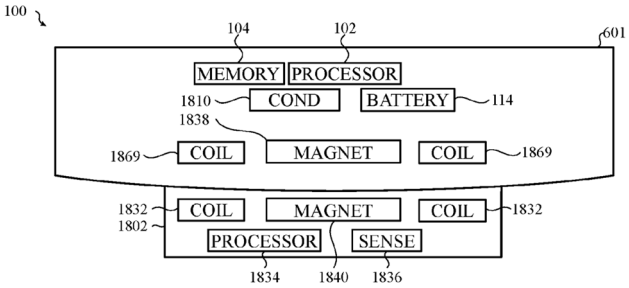

FIG. 19

Therefore, Apple's '783 patent confirms that the convex curvature of the arc-shaped portions claimed in the D'842 Patent is dictated by the function of aligning the underlying Watch with its corresponding charger.

52. Additionally, as explained below, both Paulke and Yuen are prior art utility patent publications that disclose arc-shaped portions with a convex curvature as claimed by the D'842 Patent. *Infra* §§IX.A.1-2. Further, as explained above, the back of every Apple Watch has had the same convex curvature. Exhibit 1021, 47:12-16, 46:22-23. And the Apple Watch was recently found to infringe claims of two Masimo patents that require a protrusion with a convex surface. Exhibit 1040, 41, 444, 53, 55. The sensor design claimed by the D'842 Patent includes protruding arc-shaped portions with a convex surface, as discussed and shown above. *Supra* §V.A.

And the Masimo utility patents infringed by Apple explain that a protrusion with a convex surface provides functional benefits such as increasing the signal-to-noise ratio of the sensor. Exhibit 1041, 21:9-43; Exhibit 1042, 21:1-35. Therefore, at least six utility patent filings (Paulke, Yuen, Apple's '157 and '783 patents, and the two Masimo patents infringed by Apple Watch) confirm that the convex curvature of the arc-shaped portions claimed by the D'842 Patent is functional.

53. Apple's technical expert in the parties' parallel district court litigation also testified that, for light-based physiological measurement devices, which would include the Apple Watch Series 4 underlying the D'842 Patent, a convex protruding feature like the claimed arc-shaped portions provides numerous functional benefits:

> A protrusion can be used to [1] improve the contact between the sensor head and the skin and [2] reduce errors caused by ambient light entering into the sensor head without first propagating through tissue…. [A] protrusion could [3] make the device more comfortable to wear over extended periods of time, [4] improve measurement quality, and [5] reduce device slippage due to better contact with tissue. Protrusions can help to [6] improve the quality of light-based signals received by optical biosensing devices."

Exhibit 1026 ¶111; *id.* ¶112 (describing functional benefits of alleged protrusions shown in ¶113), ¶113. These admissions by Apple's technical expert further support my conclusion that the convex curvature of the arc-shaped portions claimed by the D'842 Patent is a functional element of the claimed design.

54. Accordingly, for the reasons explained above, the convex curvature of the claimed arc-shaped portions is a functional design element.

B. The Arrangement of the Claimed Arc-Shaped Portions Is Functional

55. Apple Watch Series 4 has arc-shaped electrodes with two intended functions: (1) measuring electrical impulses through the skin and (2) not interfering with the central circular array of rectangular photodiodes such that the photodiodes can receive the light used by the Watch to measure heart rate.

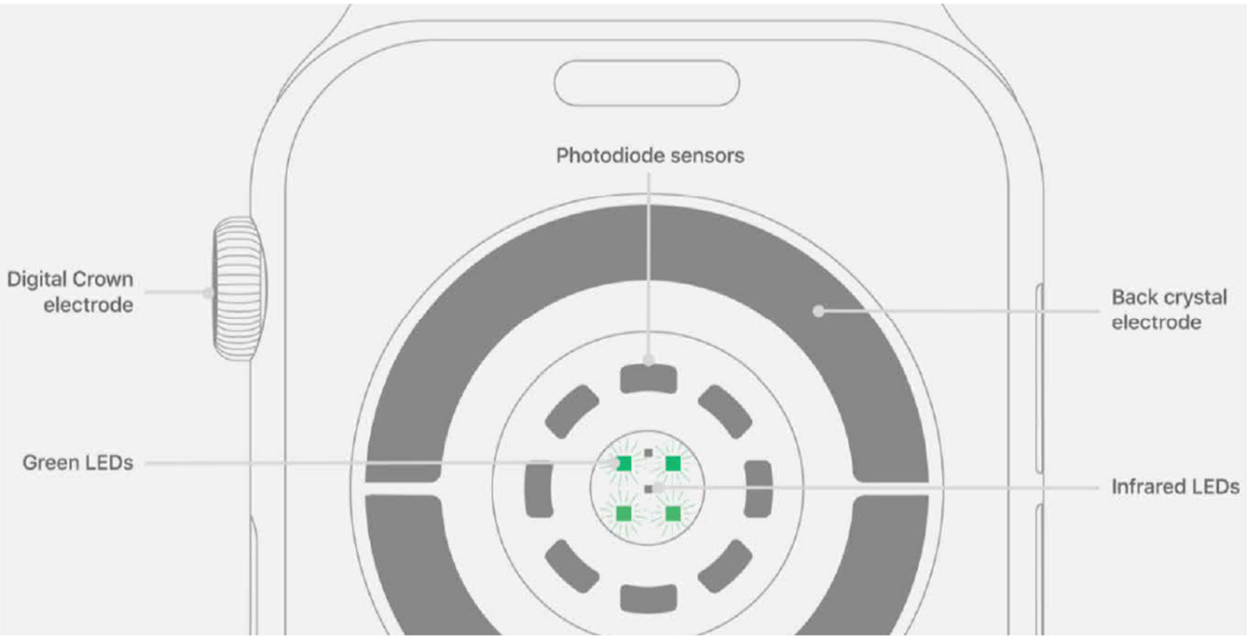

Exhibit 1019, 2-3. The D'842 Patent claims the same design. Exhibit 1001, FIG. 4.

56. Apple's '157 patent teaches that the device's electrodes should be arranged as claimed in the D'842 Patent in order to achieve these two functions. The '157 patent explains the electrodes are "arc-shaped and positioned" and "sized," for example, as shown in FIG. 5D (below, right), to achieve the same two functions: (1) "provid[ing] good electrical contact between the electrodes 412, 414 and skin" and (2) "allow[ing] optical communication" between the optical sensor and skin.

Exhibit 1024, 17:20-34; *id.*, 13:54-59 ("electrodes 412, 414 may be positioned … so as not to interfere with optical communication between an optical sensor subsystem 416 interior to the watch body 2020 … and [the skin]."). As shown below, the arrangement of electrodes taught by the '157 patent (gray, right) is basically identical to the claimed arrangement of arc-shaped portions (gray, left).

D'842 Patent, FIG. 4	Exhibit 1024 ('157 patent), FIG. 5D
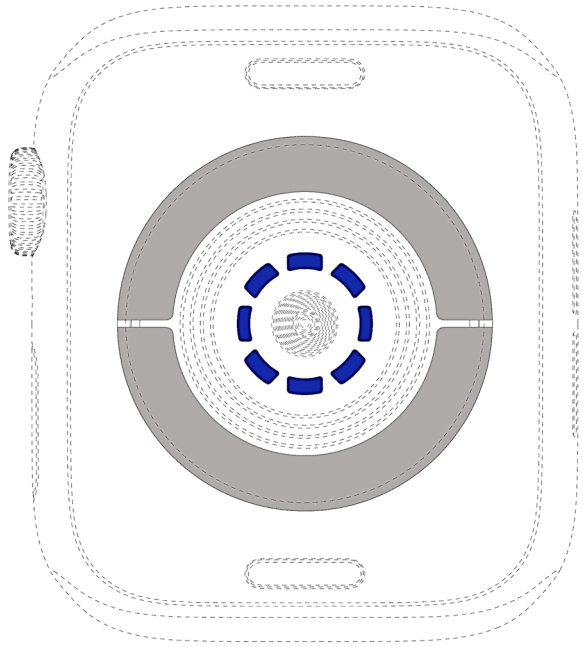 FIG. 4	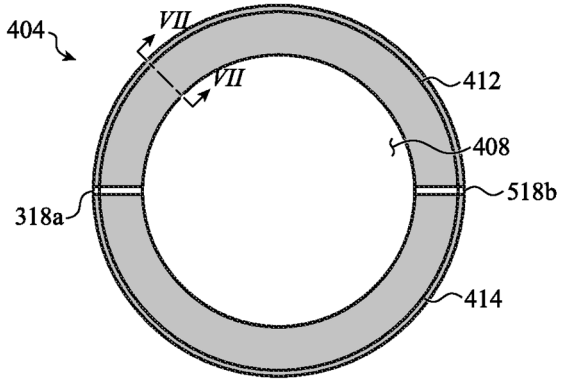 FIG. 5D

The arrangement of arc-shaped portions claimed by the D'842 Patent is also claimed in the '157 patent. Exhibit 1024, Claims 3, 9 (reciting first and second arc-shaped electrodes separated by a gap). The '157 patent also teaches, and a POSITA would understand, that the minimal spacing (or "gaps") between the arc-shaped portions claimed in the D'842 Patent and described in the '157 patent maximizes the area of

"electrical contact between the electrodes [ ] and skin" to "improve electrical sensor efficiency." Exhibit 1024, 17:20-28, 17:34-35, FIGS. 4A, 5C-5D. Apple's '157 patent, therefore, shows that the arrangement of the arc-shaped portions claimed in the D'842 Patent is a design element dictated by the intended skin contact and non-interference functions of such features in the underlying device (Apple Watch Series 4).

57. The circular array of rectangles claimed by the D'842 Patent are part of the optical sensor of the underlying article (Apple Watch Series 4). *Compare* Exhibit 1001, FIG. 4 *with* Exhibit 1019, 2-3. The optical sensor occupies the middle area on the back of the watch and is surrounded by a concentric circular area that includes a wireless charging coil. Exhibit 1019, 2-3; Exhibit 1027, 11. In the following figure, the area occupied by the Watch's optical sensor is shown in blue and the area occupied by the Watch's wireless charging coil is shown in orange.

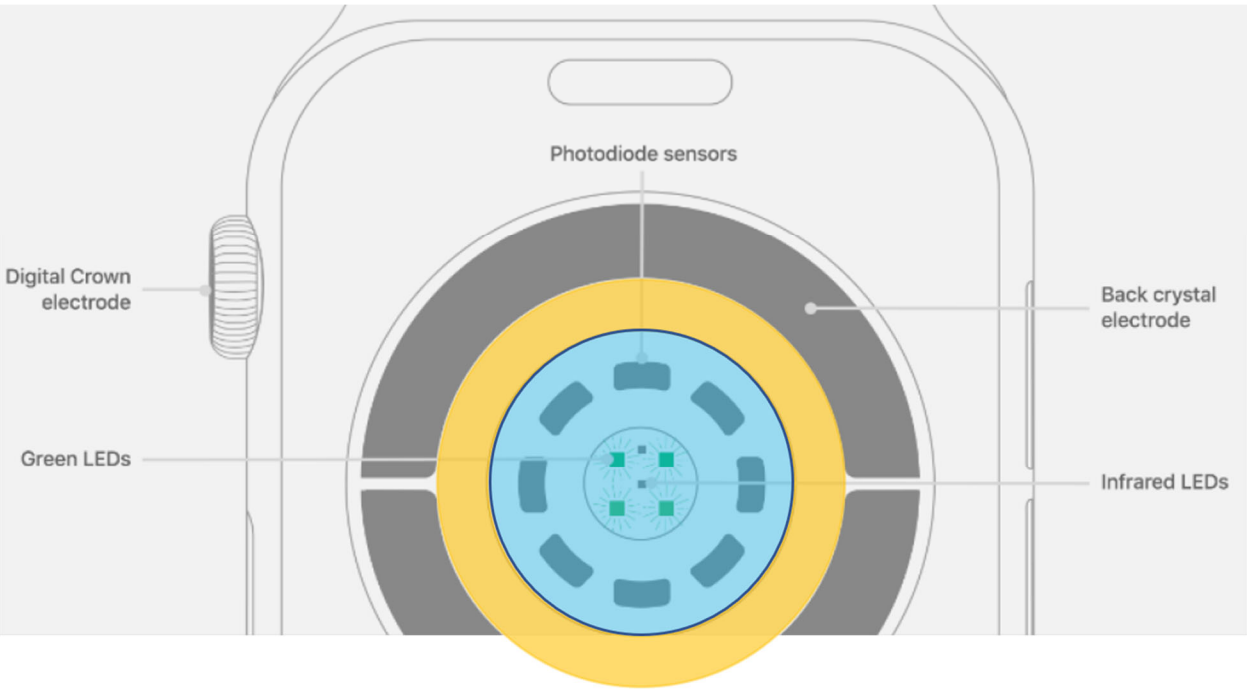

Exhibit 1019, 3 (annotated); Exhibit 1027, 11. As explained above, Apple's '157 patent discloses the same design of arc-shaped electrodes as is claimed by the D'842 Patent. Exhibit 1001, FIG. 4; Exhibit 1024, FIGS. 4A, 5C-5D. Apple's '157 patent also teaches that those arc-shaped electrodes are "positioned" and "sized" to avoid interference with (1) "electrical structures," such as the charging coil shown above in orange and (2) "optical communication" between the skin and the optical sensor shown above in blue. Exhibit 1024, 17:20-34. These interference-avoiding functions of the arc-shaped portions' design dictates that they must be arranged and sized as claimed in the D'842 Patent to avoid interfering with the wireless charging coil or the optical sensor of the Watch.

58. Further, Apple's '783 patent explains that aligning the charging coil of the device (e.g., Apple Watch), shown in orange below, with the corresponding

charging coil of its wireless charging dock or cradle, shown in green below, is required for efficient wireless charging.

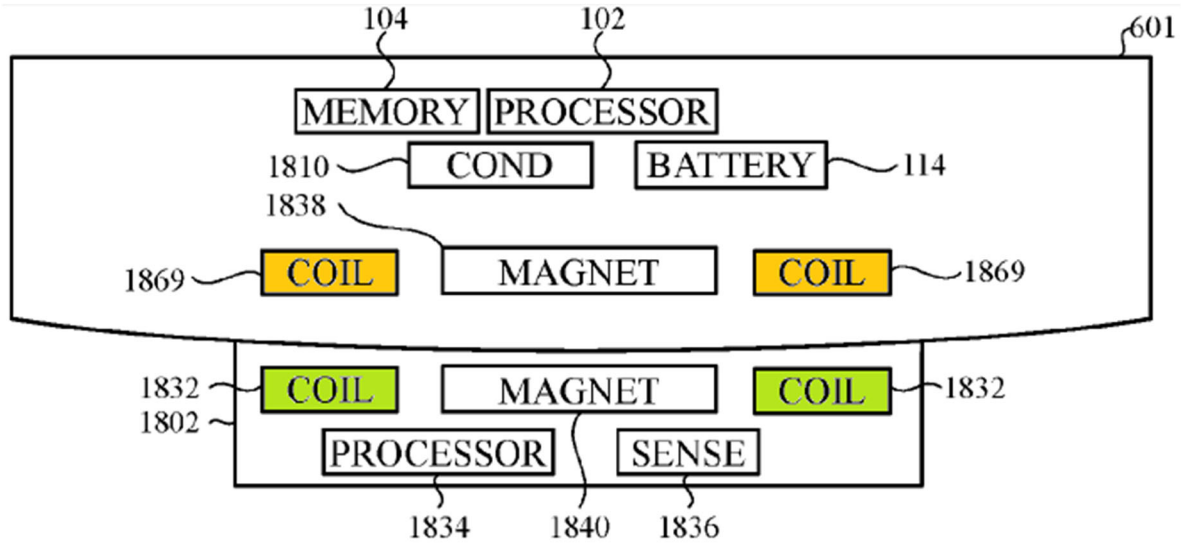

FIG. 19

Exhibit 1025, FIG. 19, 42:63-43:48, 45:18-51. For example, the '783 patent teaches that:

> A transmit coil and receive coil may be disposed respectively within housings of the dock and electronic device so as to align along a mutual axis when the electronic device is placed on the dock. ***If misaligned, the power transfer efficiency between the transmit coil and the receive coil may decrease as misalignment increases.*** Accordingly, in many examples, the wireless power transfer system may include one or more alignment assistance features to effect alignment of the transmit and receive coils along the mutual axis.

Id., 42:63-43:4 (emphasis added); *see id.*, 43:5-48 (describing features to align the charging coils of the device (i.e., Apple Watch) and its charging dock), 45:18-51 (same), FIGS. 18-19. Consistent with the teachings of the '783 patent, Apple admitted during the ITC Investigation that the Apple Watch must properly align with

its charging dock or cradle for efficient wireless charging. For example, Apple admitted the "dome" shape of every Apple Watch "is designed to align the watch with the charging hardware components so that the charging can occur in an efficient way." Exhibit 1021, 47:17-23. Similarly, the Apple engineer leading development of Apple Watch's health sensors, Mr. Land (*id.*, 954:15-955:12), testified that "the dome-shape [of Apple Watch], when in combination with the charging cradle … provides a self-centering mechanism so that, when you place [the Watch] on the cradle, it aligns itself well to the other -- the charger for efficient wireless charging." *Id.*, 959:14-960:2. Therefore, for efficient wireless charging, the location of the charging coil in the Watch must align with the location of the corresponding charging coil in the Watch's established charger. Put simply, the location of the charging coil in the Watch's charger dictates the location of the associated charging coil in the Watch, and thus, the location of the coil in the D'842 Patent, which claims the design of an article (Apple Watch Series 4) with such a charging coil. *See, e.g.*, Exhibit 1027, 11, Exhibit 1022, 1-3. Moreover, since the arc-shaped electrodes cannot interfere with the Watch's charging coils or optical sensor, as explained above and in Exhibit 1024, 17:20-34, the arcs claimed by the D'842 Patent are the most efficient shape for maximizing the area of the electrodes that can contact the user's skin.

59. Relatedly, if the Watch's electrodes were not arc-shaped but had a different shape, they would either have to provide less area for electrical contact with the skin or provide more area at the risk of interfering with the Watch's charging coil or optical communication (i.e., the passage of light) between the Watch's optical sensor and the skin. This trade-off between the area of electrical contact with the skin and the risk of interfering with the device's charging coil or optical sensor is avoided by using the arc-shaped electrode design claimed by the D'842 Patent.

60. Starting with Apple Watch Series 4 and continuing through Apple Watch Series 5, 6, 7, 8, and Ultra, which I understand constitutes five consecutive Apple Watch generations and six different Apple Watch models, Apple has retained the claimed arrangement of arc-shaped portions (i.e., electrodes) in every Apple Watch with ECG functionality. Exhibit 1022. In my opinion, that Apple kept the claimed arrangement of arc-shaped electrodes in every Apple Watch for at least five consecutive Watch generations indicates that the claimed arrangement of electrodes is the most useful arrangement for this functional feature (measuring electrical impulses) of the Watch.

61. Additionally, as shown below, like the Apple Watch Series 4 (right), the claimed arc-shaped electrodes have a convex curvature (colored cyan, left).

D'842 Patent, FIG. 6	Apple Watch Series 4 (Exhibit 1027)
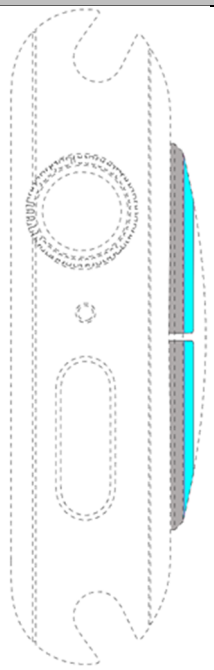 FIG. 6	

When the Watch is worn, the above convex curvature can roll around the user's wrist (i.e., around the longitudinal axis of the user's arm) such that portions of the convex curvature do not contact the skin. Such a lack of contact would be problematic because electrodes cannot measure electrical impulses through the skin if they are not in contact with the skin. *See, e.g.*, Exhibit 1007 ¶¶34 ("The electrocardiogram sensor 116 ('ECG sensor 116') … may include at least two electrodes 130, 132 for contacting a user's skin …."), 36 ("Via contact with a user's skin, the ECG sensor 116 may perform (i.e., take) an electrocardiogram measurement of a user wearing the smartwatch"). Thus, the claimed arrangement of arc-shaped portions ensures that at least a part of each electrode contacts the skin by positioning the arc-shaped electrodes around the entire outer periphery of the convex curvature, other than the

two small gaps, as shown above (and in FIGS. 2, 4-6 of the D'842 Patent). An alternative design to the claimed arrangement of arc-shaped portions would necessarily cover less of the convex curvature's outer periphery than the claimed design, and therefore would increase the possibility that the Watch could not measure electrical impulses because one or both electrodes failed to contact the skin when in use. Thus, an alternative design to the claimed arrangement of arc-shaped portions would adversely affect, or pose an unnecessary risk of adversely affecting, the electrical signal-measuring utility of the underlying device.

62. FIGS. 5-8 of the D'842 Patent show that the sidewall of each arc-shaped portion (which includes a chamfered edge and a vertical edge) is not claimed, as explained above in Section VIII. Even if the arc-shaped portions' sidewalls were claimed, their chamfered edge is primarily functional for improving user comfort, as Apple's expert admitted by testifying that "chamfered edges have been around for many decades as a means to soften transitions between surfaces and make items such as watches more wearable." Exhibit 1021, 1236:17-1237:3; *id.*, 1229:8-10 ("chamfered edges [] make for a comfort issue with regard to the usage of the watch").

63. Accordingly, for the reasons explained above, the arrangement of the claimed arc-shaped portions is a functional design element.

C. <u>The Arrangement the Claimed Rectangles Is Functional</u>

64. The article underlying the D'842 Patent, Apple Watch Series 4, includes an optical sensor that is a PPG sensor. Exhibit 1019, 2-3. The Watch's PPG sensor, like any PPG sensor, requires detectors to receive the light used by the sensor to measure heart rate. *Id.*; *infra* Section IX.A.1. In the Apple Watch Series 4, the detectors used to receive light for measuring heart rate are the circular array of eight "light-sensitive photodiodes." Exhibit 1019, 2-3. The following comparison shows that the Watch's circular array of eight photodiodes (right column) are the rectangles claimed by the D'842 Patent (left column).

Claimed Rectangles	Photodiodes in Apple Watch Series 4
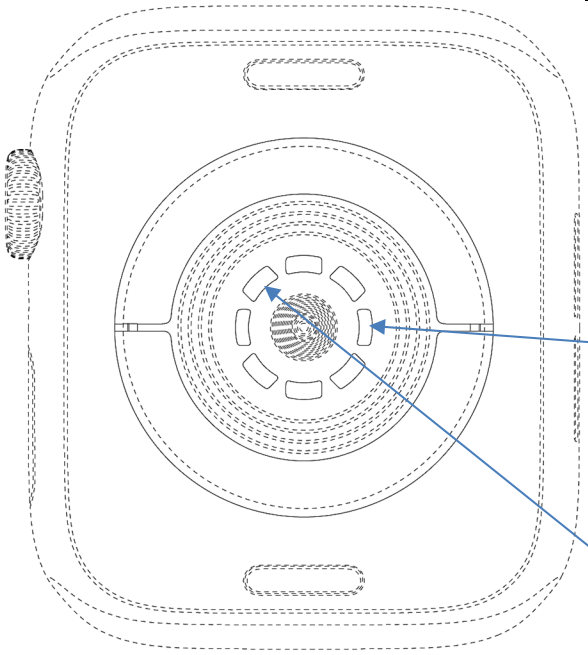 Exhibit 1001, FIG. 4	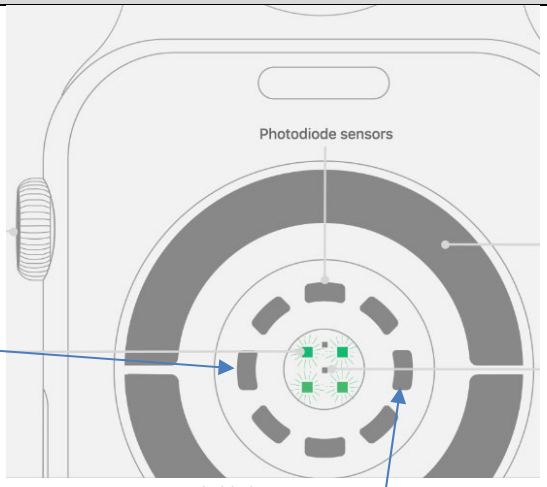 Exhibit 1019, 3 Exhibit 1005, 2

Without these photodiodes, the Watch's PPG sensor could not measure the user's heart rate. Exhibit 1019, 2-3.

65. As shown above, the rectangular photodiodes claimed by the D'842 Patent and included in the Apple Watch Series 4 are arranged in a radially-symmetric array. Exhibit 1001, FIGS. 2, 4; Exhibit 1019, 3; Exhibit 1005, 2. The prior art teaches that the claimed radially-symmetric design of photodiodes has the primarily

functional purpose of "maximiz[ing] the detection of backscattered light from the skin." Exhibit 1011, 4:59-62; *id.*, 4:14-50 (describing improved sensors with "six photodiodes arranged symmetrically around the LEDs"), 4:51-65 (explaining, with reference to prior art designs discussed at 4:14-50, that "a radially-symmetric photodetector array can help to maximize the detection of backscattered light from the skin"), FIG. 7 (showing sensor with two radially-symmetric arrays of six photodiodes; outer photodiode array 16 and inner photodiode array 18). Such a radially-symmetric design of photodiodes was ubiquitous in the prior art. Exhibit 1038, 2-3. The prior art also explains that the number and size of photodiodes is dictated by a functional purpose, which is improving the signal-to-noise ratio of the PPG sensor, thereby increasing the sensor's accuracy. Exhibit 1011, 4:6-13 (increasing the "number of photodetectors" and their overall "active area" "increases the amount of backscattered light that can be detected" and thus achieves "improvements in signal-to-noise ratio"), 9:22-33 (describing the FIG. 7 sensor and explaining that its design "minimiz[es] some of the measurement inaccuracies" of PPG sensors). Therefore, the prior art confirms that the number and arrangement of rectangles claimed by the D'842 Patent are primarily functional elements for maximizing the signal-to-noise ratio, and thus the accuracy of, the PPG sensor.

66. As shown below, Apple's '157 patent discloses the same arrangement of rectangles claimed in the D'842 Patent.

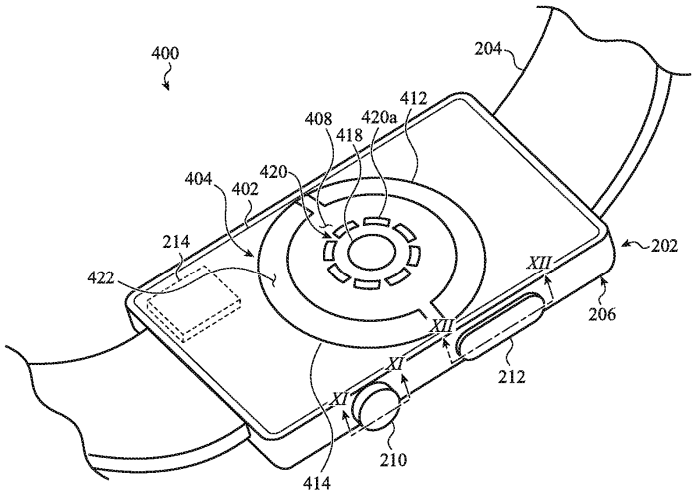

FIG. 4A

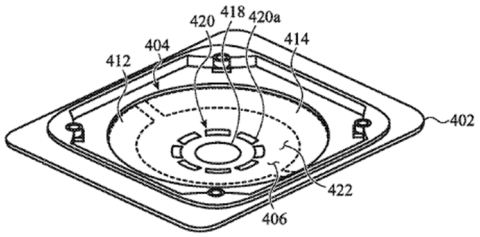

FIG. 4C

Exhibit 1024, FIGS. 4A, 4C. The ’157 patent explains that the carrier 404, which has a convex surface as shown above, includes “eight radial openings” (420) that are positioned over corresponding “light receivers (e.g., photodetectors, such as photodiodes)” of the Watch’s optical sensor 416 (not shown) underlying the convex, protruding carrier 404. *Id.*, 15:5-7, 15:34-40. The ’157 patent discloses a watch that, like Apple Watch Series 4, includes a circular array of eight photodiodes “to perform a sensor function (e.g., to determine a heart rate),” and that the array of photodiodes surrounds the central “light emitters (e.g., LEDs).” *Id.*, 15:34-37. The ’157 patent also explains that receiving light is the “sensing operation for which the optical subsystem 416 is designed.” *Id.*, 15:7-15; *id.*, 15:65-16:2 (explaining the device “may activate the light emitters [i.e., LEDs] and light receives [i.e., photodiodes] to perform a sensor function (e.g., to determine a heart rate)”); Exhibit 1019, 2-3 (explaining that the Apple Watch’s PPG sensor uses “light-sensitive

photodiodes" to measure heart rate). Therefore, Apple's '157 patent confirms that the arrangement of rectangles claimed by the D'842 Patent is driven by the functionality of receiving light needed to accurately measure the user's heart rate.

67. Accordingly, for the reasons explained above, the arrangement of the claimed rectangles is a functional design element.

D. <u>The Overall Circular Shape of the Claimed Sensor Is Functional</u>

68. The claimed Apple Watch sensor design has an overall circular shape. Exhibit 1001, FIGS. 2, 4. However, the prior art confirms that optical sensors with overall circular shapes like the claimed design (Exhibit 1001, FIGS. 2, 4) are functional because optical sensors with an overall circular shape were ubiquitous in the prior art, long before the D'842 Patent. *See, e.g.*, Exhibit 1006, FIGS. 1F-1G, 5C; Exhibit 1007, FIGS. 1B, 3-4; Exhibit 1008, FIGS. 2, 4; Exhibit 1009, FIGS. 1-7; Exhibit 1011, FIG. 7; Exhibit 1038, 2-3 (showing additional examples of prior art sensors with a circular shape). Additionally, the overall circular sensor shape of the claimed design is functional because that shape is more comfortable for wrist-worn devices. *See, e.g.*, Exhibit 1030, 20:41-42 ("Patient comfort can also be considered in determining the size and shape of the protrusion."); Exhibit 1006, 5:29-31, 13:5-12, FIGS. 1F-1G; Exhibit 1017, 102 (Apple arguing that "it was well-known in the art that a sensor that comes in contact with tissue should incorporate ergonomic features to increase comfort and optimally contact the user's tissue"). Also, using a

radially-symmetric array of rectangular photodiodes was a well-known design for improving the signal-to-noise ratio and thus the performance of optical sensors, including PPG sensors. *Supra* Section VIII.C; *infra* Section IX.B.3. A POSITA would have understood that an overall circular sensor shape was the most efficient shape for housing a circular optical sensor design, such as the design in Figure 7 of Mendelson (Exhibit 1011), with minimal wasted or excess space. *See, e.g.*, Exhibit 1025, FIG. 16 (showing wrist-worn device with overall circular sensor shape), 10:16-26 ("The components may also be configured to take up a minimal amount of space, which may facilitate the device body 11 [i.e., overall sensor shape] having a small form factor. In cases such as these, the components may be packaged [ ] in order to provide the most functionality in the smallest space."), 2:46-50 ("The embodiments included herein are directed to a consumer product, which may include a portable or wearable electronic device that is configured to provide an expansive feature set integrated or incorporated into a compact form factor."), 49:8-10 (discussing "[t]he space constraints associated with a small wrist-worn device"). Further, an overall circular sensor shape, as claimed in the D'842 Patent functions to provide a sensor with the largest usable sensor surface area (i.e., surface of the sensor that contacts the user's skin in use) for a given sensor width.

69. Accordingly, for the reasons explained above, the overall circular shape of the claimed sensor is a functional design element.

70. In conclusion, for the reasons explained above, the following elements are functional elements of the design claimed by the D'842 Patent: (1) the convex curvature of the claimed arc-shaped portions, (2) the arrangement, including the shape, size, and spacing, of the claimed arc-shaped portions, (3) the arrangement of the claimed rectangles, and (4) the overall circular shape of the claimed sensor.

IX. TECHNICAL OPINIONS REGARDING OBVIOUSNESS FOR THE D'842 PATENT

A. Overview of the Prior Art

71. I understand that the obviousness inquiry for design patents is assessed from the perspective of a designer of ordinary skill in the art. As explained above in Section VI, a designer of ordinary skill in the art would have consulted and collaborated with a POSITA, such as myself, regarding technical concepts outside of the designer's area of expertise. Accordingly, below, I provide technical discussion regarding the applied prior art references from the perspective of a POSITA, who would have worked closely with a designer of ordinary skill in the art to design devices like the Apple Watch Series 4 sensor design claimed by the D'842 Patent.

1. Paulke (Exhibit 1006 – PCT Appl. Pub. No. WO 2017/165532)

72. Paulke discloses "designs and techniques for incorporating biosensor devices into a wearable article for making physiological measurements while being

worn by a user (e.g., a person)." Exhibit 1006, 5:26-29. Paulke discloses arc-shaped biosensors 120 that surround a central, circular biosensor 120, as shown below.

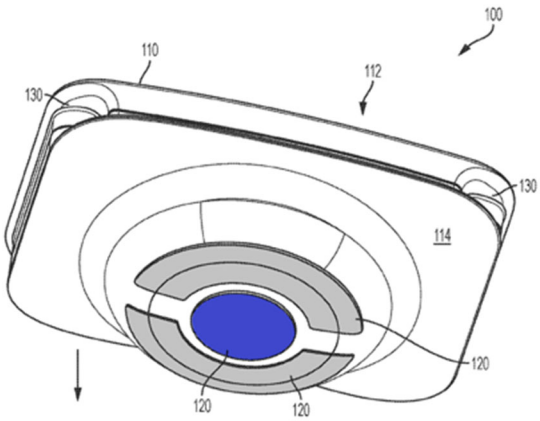

FIG. 1F

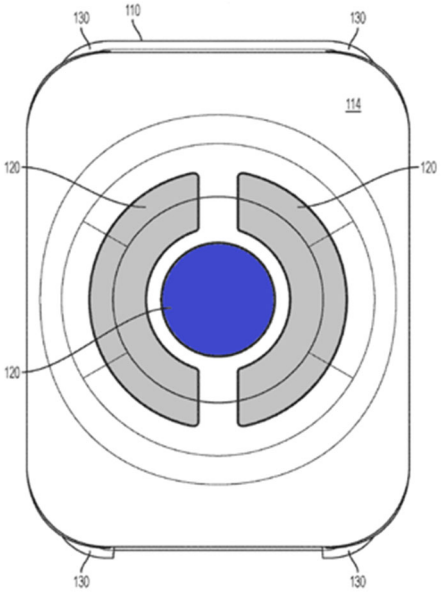

FIG. 1G

Exhibit 1006, FIGS. 1F-1G. In one example, Paulke explains that its arc-shaped biosensors 120 (shown in gray above) are electrodes, specifically, "galvanic skin response (GSR) sensor pads 122, which detect and/or measure electrodermal activity (e.g., skin conductance) of the wearer." *Id.*, 14:29-32, FIG. 2A. Paulke's arc-shaped electrodes 120/122 surround a circular biosensor 120, which Paulke teaches can be "a heart rate and/or blood oxygen sensor 124" that may be replaced with "any other suitable biosensor(s)," including "optical reflectance" and "oxygen saturation sensors." *Id.*, 14:26-28, 15:6-18, FIG. 2A. Paulke's blood oxygen sensor 124, like any non-invasive pulse oximetry sensor, is a PPG sensor. Exhibit 1011, 1:33-2:27 (explaining that non-invasively measuring oxygen saturation requires using PPG

sensors and related algorithms), 4:1-65 (describing prior art blood oxygen sensor designs where "the computation of [oxygen saturation] is based on reflection photoplethysmograms measured by a single photodetector, regardless of whether one or multiple photodiodes chips are used to construed the sensor").

73. Moreover, Paulke's PPG sensor, like any PPG sensor, necessarily requires (1) a light source such as LEDs, (2) at least one light detector such as photodiodes, and (3) at least one opening that allows light to reach and be detected by the light detector. Exhibit 1011, FIGS. 3-4, 7, 1:33-2:27 (explaining how PPG sensors use light detected by photodiodes to calculate oxygen saturation), 4:6-65 (describing examples of PPG sensors with multiple LEDs and photodiodes); Exhibit 1030, FIGS. 3C (showing PPG sensor with multiple openings and photodiodes), 7A-7B (showing PPG sensor with LEDs, photodiodes, and an opening), 8:25-29 (describing PPG sensor with "one or more openings … to allow attenuated light from a measurement site, such as a finger, to pass through to one or more detectors"), 12:1-12 (describing PPG sensor with emitter 104 and detectors 106, wherein the emitter 104 includes "one or more sources of optical radiation, such as LEDs"), 14:11-19 ("[T]he detectors 106 can capture and measure light transmitted from the emitter 104 that has been attenuated or reflected from the tissue in the measurement site … [and] output a detector signal 107 responsive to the light captured or measured. The detectors 106 can be implemented using one or more

photodiodes….”). Rectangular photodiodes arranged in a radially-symmetric array were ubiquitous in prior art optical sensors. Exhibit 1011, 4:6-62 (radially-symmetric array of six rectangular photodiodes), FIG. 7 (radially-symmetric array of 12 rectangular photodiodes); Exhibit 1036, 6 (radially-symmetric array of six rectangular photodiodes); Exhibit 1037, 24 (radially-symmetric array of six rectangular photodiodes). Apple itself argued during the ITC Investigation that “there’s nothing patentable about multiple detectors [i.e., photodiodes]” because rectangular photodiodes arranged in a radially-symmetric array were ubiquitous in prior art optical sensors. Exhibit 1021, 58:3-13 (referring to Exhibit 1038, 2-3); Exhibit 1038, 2-3 (showing examples, starting in 1978, of optical sensors with radially-symmetric arrays of rectangular photodiodes). Because these features of PPG sensors were so well-known in the art, a POSITA would have understood that Paulke’s blood oxygen sensor included a rectangular photodiode (drawn in blue below) associated with an opening in the sensor, as shown in either of the exemplary composite figures below.

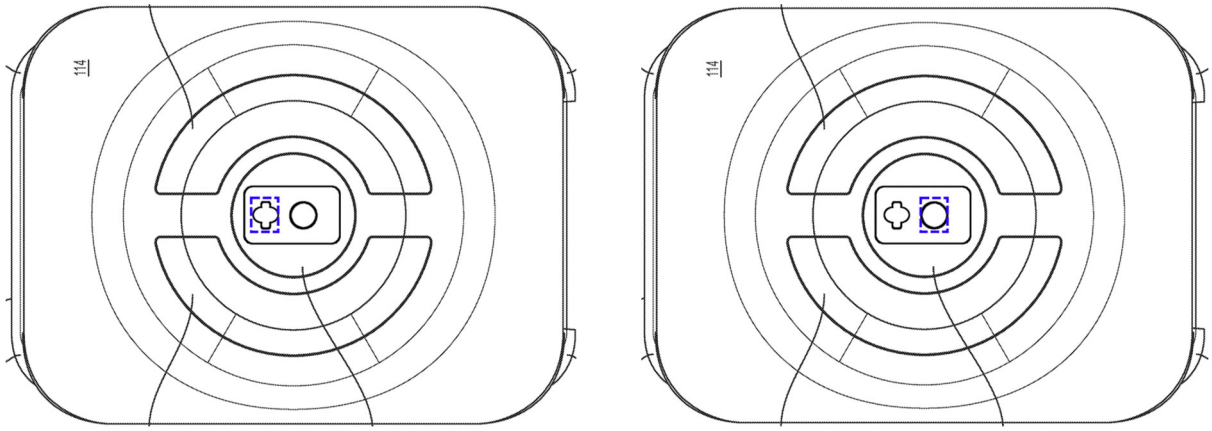

Exhibit 1006, FIG. 1G (composites of FIG. 1G combined with blood oxygen sensor 124 from FIG. 2A and a photodiode associated with an opening in that sensor).

2. <u>Yuen (Exhibit 1007 – U.S. Pat. Appl. Pub. No. 2019/0196411)</u>

74. Yuen discloses a smartwatch assembly 100 with arc-shaped electrodes 130, 132 and a central PPG sensor 118, as shown below.

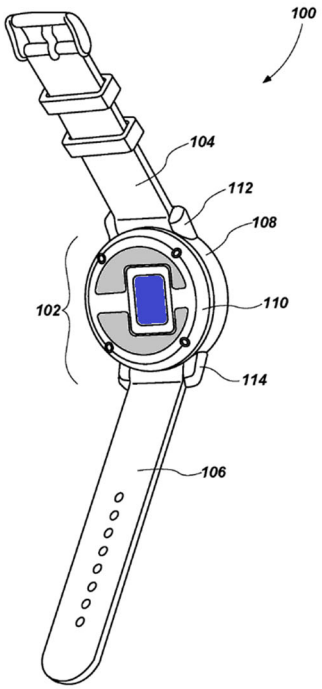

FIG. 1B

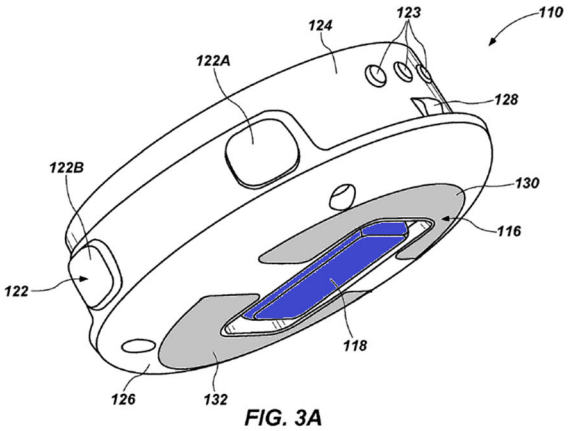

FIG. 3A

Exhibit 1007 ¶32, FIGS. 1B, 3A. The arc-shaped electrodes 130, 132 and PPG sensor 118 of Yuen are incorporated in the convex back surface 126 protruding from the back of the smartwatch assembly 100. *Id.* ¶¶35-36, 42, FIGS. 1B, 3A. Yuen's PPG sensor 118, like any PPG sensor, necessarily requires (1) a light source such as LEDs, (2) at least one light detector such as photodiodes, and (3) at least one opening that allows light to reach and be detected by the light detector, as explained above in

the discussion of Paulke. *Supra* Section IX.A.1. For the reasons explained above in Section IX.A.1 regarding Paulke, a POSITA would have understood that Yuen's PPG sensor included a rectangular photodiode (drawn in blue below) associated with an opening in the sensor, as shown in the exemplary composite figure below.

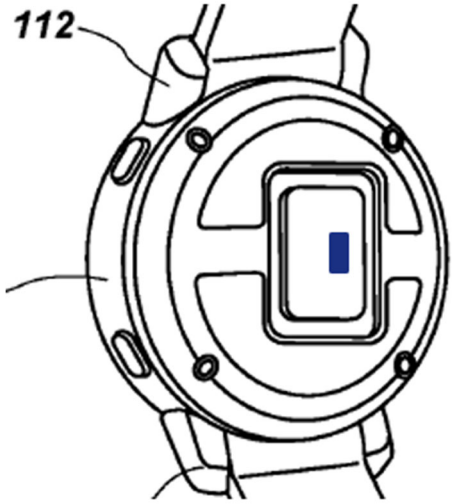

Exhibit 1007, FIG. 4 (composite of FIG. 4 combined with an exemplary photodiode in Yuen's PPG sensor).

3. <u>Fong (Exhibit 1008 – U.S. Pat. No. D827,831)</u>

75. Fong (left) discloses the design of the Study Watch from Verily Life Sciences (right), as shown in the annotated figures below.

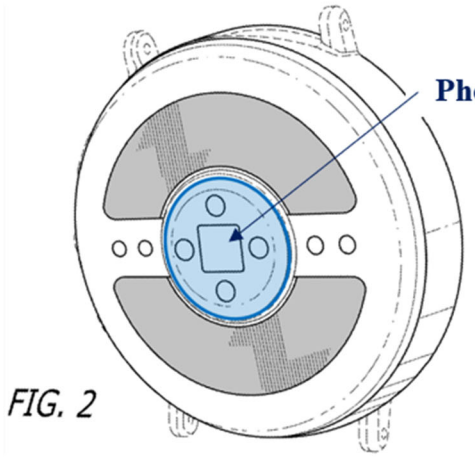

Fong (Exhibit 1008, FIG. 2) **Verily Study Watch (Exhibit 1016, 3)**

Exhibit 1008, FIG 2; Exhibit 1016, 2-3. Exhibit 1016 is an article describing the sensor design depicted in Fong. Exhibit 1016. Exhibit 1016 explains that, on the bottom of Fong's sensor "are the green LEDs and optical sensors that detect heart rate, [and] metal electrodes that measure electrodermal activity." *Id.*, 2-3. The arc-shaped electrodes of Fong are incorporated in the convex surface on the back of the watch. Exhibit 1029, which is a 510(k) premarket notification, states that the "Study Watch [i.e., Fong's design] contains an optical sensor that collects the PPG waveform from blood flow and this PPG raw data is utilized for non-medical heart rate data." Exhibit 1029, 1, 3. Accordingly, a POSITA would have understood that Fong's central optical sensor is a PPG sensor with at least one photodiode, as shown in the figures above. Fong's PPG sensor, like any PPG sensor, necessarily requires (1) a light source such as LEDs, (2) at least one light detector such as photodiodes,

and (3) at least one opening that allows light to reach and be detected by the light detector, as explained above in the discussion of Paulke. *Supra* Section IX.A.1.

4. <u>Bushnell (Exhibit 1009 – U.S. Pat. Appl. Pub. No. 2017/0086743)</u>

76. Bushnell discloses a wrist-worn smartwatch with a "housing component 104" comprising a convex surface (red, below) that covers a "health sensor 215" (blue, below), which may be a "a photoplethysmogram (PPG) sensor." Exhibit 1009 ¶¶37, 48, FIGS. 1A (below, right), 2A (top, left) (annotated, excerpted).

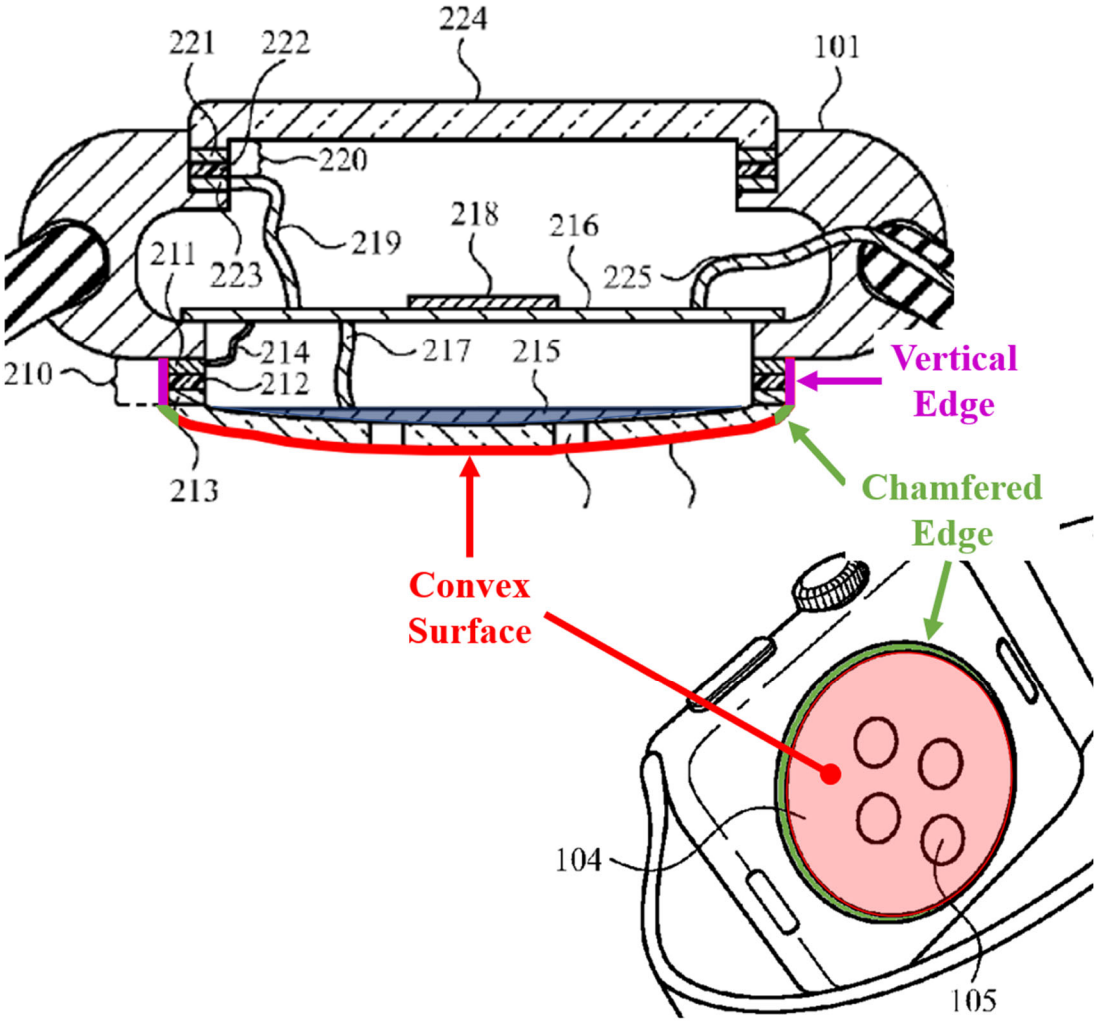

As shown above, Bushnell also discloses a chamfered edge (green) and a vertical edge (pink) between the convex surface (red) of its housing component and the back of the watch device (101). *Id.* As shown above, Bushnell's PPG sensor (e.g., 215 (colored blue above), 315, 415, etc.), is incorporated in the convex housing component protruding from the back of Bushnell's watch device. *Id.* ¶¶40, 48, FIGS. 2-7. Bushnell's PPG sensor, like any PPG sensor, necessarily requires (1) a light source such as LEDs, (2) at least one light detector such as photodiodes, and (3) at least one opening that allows light to reach and be detected by the light detector, as explained above in the discussion of Paulke. *Supra* Section IX.A.1.

5. <u>Mendelson (Exhibit 1011 – U.S. Pat. No. 6,801,799)</u>

77. Mendelson discloses pulse oximetry (i.e., oxygen saturation or blood oxygen) sensors, which are PPG sensors. Exhibit 1011, 1:33-2:27 (explaining how "[p]rior art non-invasive optical sensors" use photoplethysmography (PPG) to measure physiological parameters like oxygen saturation). Mendelson discloses PPG sensor designs with "radially-symmetric" arrays of rectangular photodiodes, including (1) "a sensor having six photodiodes arranged symmetrically around the LEDs" and (2) a sensor with two symmetrical circular arrays of six rectangular photodiodes (twelve total photodiodes (16/18), shown in blue) surrounding the central red and infrared LEDs (12A-12C), as shown below.

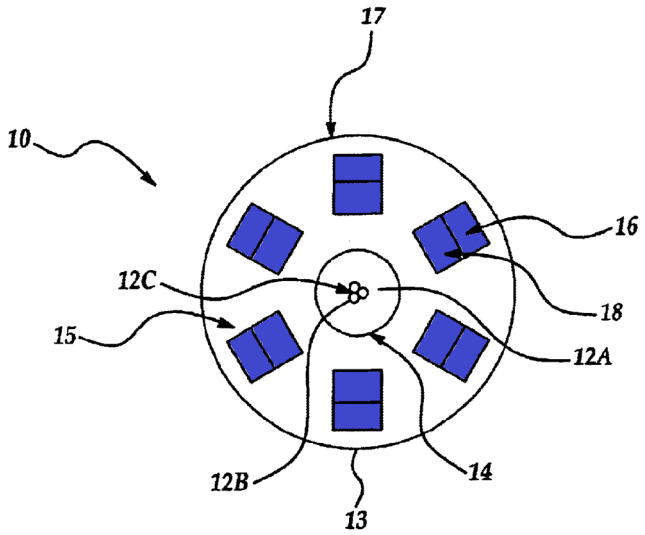

Figure 7

Exhibit 1011, FIG. 7, 9:22-40 (describing Mendelson's FIG. 7 PPG sensor). Mendelson's PPG sensors, like any PPG sensor, necessarily require (1) a light source such as LEDs, (2) at least one light detector such as photodiodes, and (3) at least one opening that allows light to reach and be detected by the light detector, as explained above in the discussion of Paulke. *Supra* Section IX.A.1.

B. GROUND 1: Obviousness Over Paulke and Mendelson

78. I understand that the obviousness inquiry for design patents is assessed from the perspective of a designer of ordinary skill in the art. As explained above in Section VI, a designer of ordinary skill in the art would have consulted and collaborated with a POSITA, such as myself, regarding technical concepts outside of the designer's area of expertise. Accordingly, below, I provide technical discussion from the perspective of a POSITA that is relevant to whether the Apple

Watch Series 4 sensor design claimed in the D'842 Patent would have been obvious to a designer of ordinary skill in the art over Paulke and Mendelson.

1. Motivation to Combine Paulke with Mendelson

79. Paulke expressly suggests replacing its central blood oxygen sensor 124 with a suitable oxygen saturation sensor. Exhibit 1006, 15:9-18. PPG sensors with one or more circular arrays of rectangular photodiodes were well-known in the art many years before the July 2018 date of the D'842 Patent. Exhibit 1036, 6; Exhibit 1037, 24; Exhibit 1038, 2. Such circular arrays of rectangular photodiodes were known to improve the signal-to-noise ratio, and thus the measurement accuracy, of PPG sensors. Exhibit 1011, 4:1-65, 9:22-33, FIG. 7. Accordingly, a POSITA would have understood that Mendelson's FIG. 7 PPG sensor would be a suitable prior art oxygen saturation sensor to use in place of Paulke's blood oxygen sensor 124.

80. A POSITA would have been motivated to incorporate Mendelson's FIG. 7 PPG sensor as the central circular biosensor 120 of Paulke's device. Specifically, a POSITA would have been motivated to incorporate the "radially-symmetric photodetector array" of the sensor shown in FIG. 7 of Mendelson as the central biosensor 120 of Paulke's device, as shown below, to "maximize the detection of backscattered light," thereby increasing the signal-to-noise ratio, and thus improving the accuracy of, Paulke's sensor. Exhibit 1011, 4:6-62 (describing sensor performance-increasing benefit of "a sensor having six photodiodes arranged

symmetrically around the LEDs"), 9:22-40 (explaining that Mendelson's FIG. 7 sensor, with its circular array of 12 rectangular photodiodes (16/18), "minimiz[es] some of the measurement inaccuracies" in blood oxygen sensors).

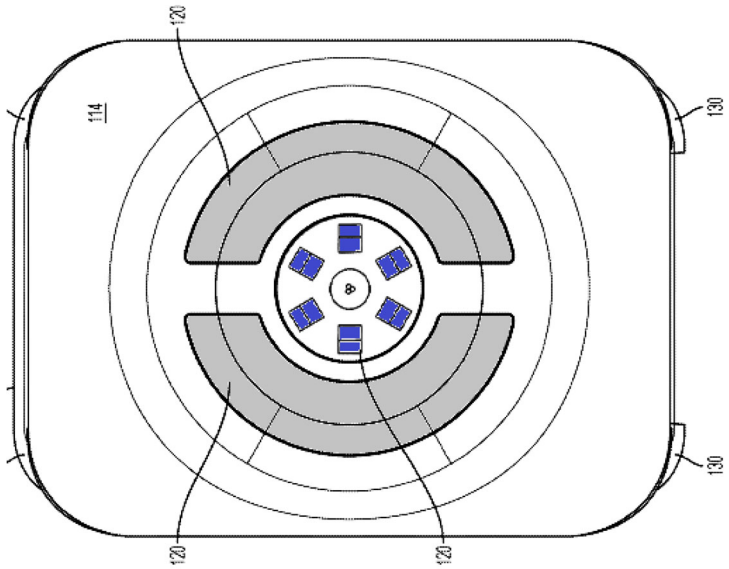

Exhibit 1006, FIG. 1G (combined with sensor from Exhibit 1011, FIG. 7). The pervasive use of radially-symmetric photodiode arrays in prior art optical sensors confirms that a POSITA in June 2018 would have been motivated to use Mendelson's well-known radially-symmetric photodiode array to improve the performance of Paulke's device using a well-known sensor design in a well-known way.

81. A POSITA further would have understood that using one of the six-photodiode arrays of Mendelson's FIG. 7 sensor with Paulke as shown below, rather than using both of Mendelson's photodiode arrays, would have considerably improved the performance of Paulke's rudimentary blood oxygen sensor 124 while

being less expensive and easier to construct than Mendelson's FIG. 7 sensor because of the use of fewer photodiodes.

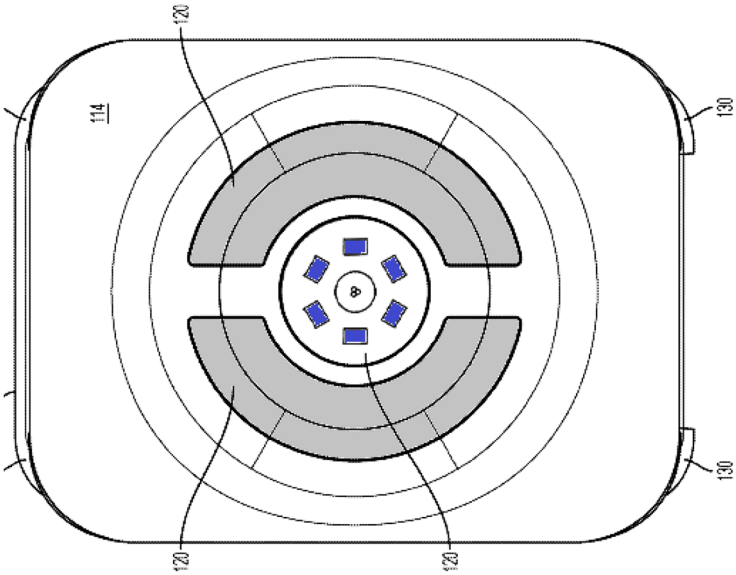

Exhibit 1006, FIG. 1G (combined with one six-photodiode array from Exhibit 1011, FIG. 7); Exhibit 1011, FIG. 7, 4:6-62 (describing sensor performance-increasing benefit of "a sensor having six photodiodes arranged symmetrically around the LEDs"), 9:22-34 (explaining FIG. 7 sensor has two six-photodiode arrays, including an outer array (16) and an inner array (18)). A POSITA also would have been motivated to use more than six photodiodes in Paulke's single radially-symmetric array to improve the sensor's signal-to-noise ratio and thus, increase the accuracy of the sensor in a manner that was still less expensive and easier to construct than the two-array, 12-photodiode design of Mendelson's FIG. 7 sensor. Exhibit 1011, 4:6-13 (increasing the "number of photodetectors" and their overall "active area"

"increases the amount of backscattered light that can be detected" and thus achieves "improvements in signal-to-noise ratio").

82. The arc-shaped electrodes disclosed by Paulke (shown in gray below) are separated by a gap, which electrically isolates the electrodes from one another.

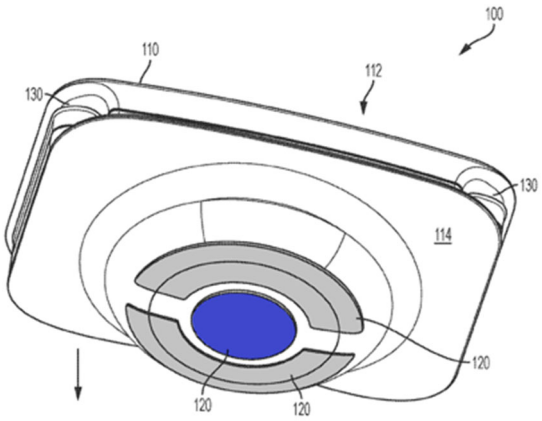

FIG. 1F

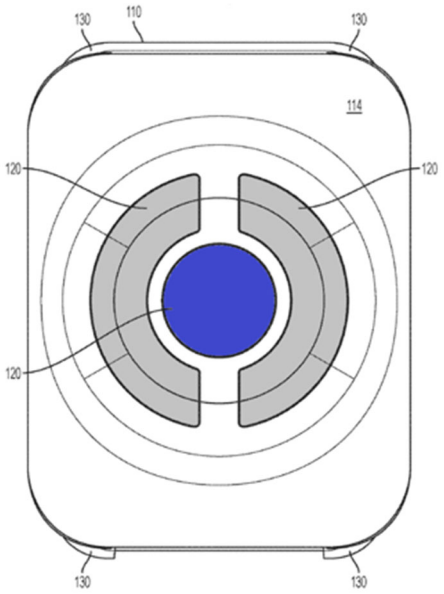

FIG. 1G

Exhibit 1006, FIGS. 1F-1G. A POSITA would understand that arc-shaped electrodes must contact the user's skin in order to measure electrical impulses or "electrodermal activity (e.g., skin conductance) of the wearer." *Id.*, 14:29-32. Paulke repeatedly discusses the importance of maintaining contact between its arc-shaped electrodes 120 and the user's skin. *Id.*, 15:3-5 (teaching that "biosensors 120 may protrude by any suitable amount … to help maintain contact between biosensors 120 and the wearer's wrist when the biosensor module 100 is worn"), 5:31-32 ("[T]he wearable articles may hold the biosensors in a way that promotes accuracy

of the measurements by the biosensors."), 6:5-7 ("Some embodiments relate to a wearable article housing one or more electronic components that maintains one or more of the electronic components in contact with the wearer's wrist."), 13:13-16 ("one or more biosensors positioned and configured to be held by the wrist band assembly in contact with … the wearer's wrist"), 16:1-4 ("the module housing the sensor(s) may be designed to … maintain contact between the sensor(s) and the wearer's body surface as the body surface moves."). A POSITA would have understood that Paulke suggests maximizing the area of its arc-shaped electrodes by teaching that "[a]ny suitable arrangement, alignment, shape, size, etc., of biosensor(s) may be utilized, and different configurations may be desirable …." *Id.*, 15:22-24. A POSITA also would have known that it was advantageous to "increase the contact area of the skin-to-electrode interface to maintain lower impedance and exhibit better behavior in reducing motion artifacts." Exhibit 1043, 10. Accordingly, in view of these teachings, a POSITA would have been motivated to extend the ends of Paulke's arc-shaped electrodes closer together to maximize the surface area of the arc-shaped electrodes for contacting the user's skin. This motivation is consistent with the disclosure of Apple's own utility patent on the Apple Watch Series 4 sensor design, which teaches that the "first and second electrodes 412, 414" can be "arc-shaped" and "sized" to "improve electrical sensor efficiency" by "providing a sufficient area to provide good electrical contact

between the electrodes 412, 414 and the skin" while avoiding interference with electrical structures like wireless charging coils or optical sensors. Exhibit 1024, 17:22-31.

83. The arc-shaped electrodes (shown in gray below) of Yuen (below, left) and Fong (below, right) are also separated by a gap that electrically isolates the electrodes from one another.

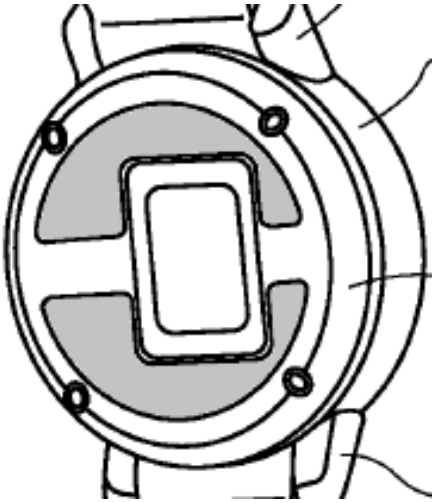

Yuen (Exhibit 1007, FIG. 1B)

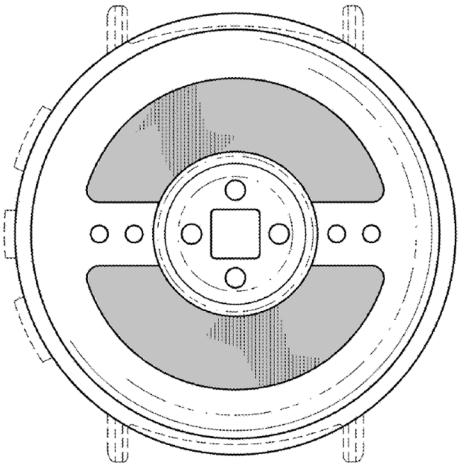

Fong (Exhibit 1008, FIG. 4)

As with Paulke's arc-shaped electrodes, a POSITA would have been motivated to extend the ends of Yuen and Fong's arc-shaped electrodes closer together to maximize the arc-shaped electrodes' available surface area for contacting the user's skin, as explained above with respect to Paulke.

84. As explained above, the Apple Watch Series 4 underlying the claimed design includes a charging coil between its arc-shaped electrodes and the circular array of photodiodes. *Supra* Section VIII.B. A POSITA would have understood

that ECG electrodes, including the arc-shaped electrodes of Paulke, Yuen, and Fong were typically made of a conductive metal and/or coating. *See, e.g.*, Exhibit 1006, 14:29-32 ("galvanic skin response (GSR) sensors pads 122"); Exhibit 1043, 6-7 (showing that all categories of dry electrodes for cardiography involve metal or conductive material electrodes), 19 ("For some designs, a coating material is necessary to improve the conductivity of the electrode."). Prior art wireless chargers had charging coils (1832, below) generally occupying the outer circumference of the charger, which would need to align with the correspondingly located charging coil (1869, below) in the wearable device, as shown below.

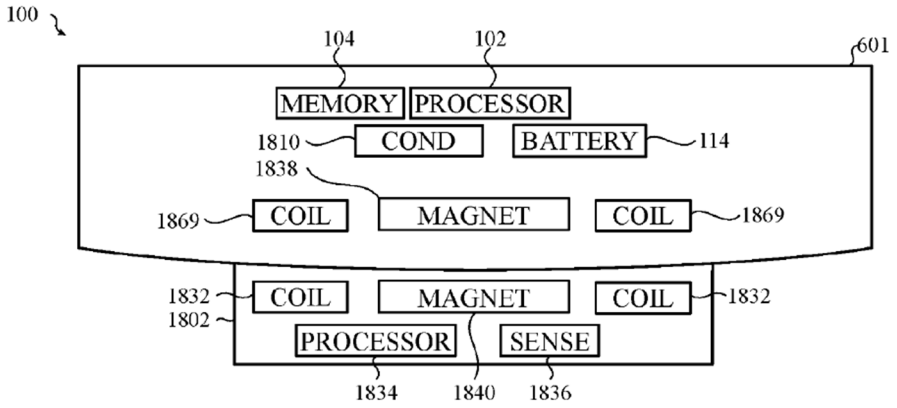

FIG. 19

Exhibit 1025, FIG. 19, 45:18-28 ("the complementary geometries [of the device 100 and charging dock 1802, above] may facilitate alignment of the electronic device and dock for efficient wireless power transfer."), 42:63-43:4 (explaining importance of aligning charging coil of device with charging coil of charger). A POSITA thus would have been motivated to shape Paulke's arc-shaped electrodes to ensure the

electrodes did not overlap the area occupied by the charging coil of the device or the area occupied by the charging coil of prior art wireless chargers, because using a "conductive member … between the transmitter-side coil [i.e., the charger] and the receiver-side coil [i.e., the device] was known to "imped[e] the transmission" of power, which "is not appropriate" for efficient wireless power transfer. Exhibit 1044, 13:25-32; *id.*, 13:33-44, FIG. 15 (summarizing experiments regarding wireless power transmission efficiency through different materials). This motivation is consistent with the disclosure of Apple's '157 patent, which teaches to size and position the arc-shaped electrodes as claimed in the D'842 Patent to "improve wireless communication [e.g., charging] efficiency" by avoiding interference with "electrical structures of a device [e.g., the Watch's charging coil]." Exhibit 1024, 17:22-31, FIGS. 4A, 5C-5D.

C. <u>GROUND 2: Obviousness Over Yuen, Mendelson, and Bushnell</u>

85. I understand that the obviousness inquiry for design patents is assessed from the perspective of a designer of ordinary skill in the art. As explained above in Section VI, a designer of ordinary skill in the art would have consulted and collaborated with a POSITA, such as myself, regarding technical concepts outside of the designer's area of expertise. Accordingly, below, I provide technical discussion from the perspective of a POSITA that is relevant to whether the Apple

Watch Series 4 sensor design claimed in the D'842 Patent would have been obvious to a designer of ordinary skill in the art over Yuen, Mendelson, and Bushnell.

1. Motivation to Combine Yuen with Mendelson and Bushnell

86. Yuen expressly suggests using "any PPG sensor 118 known in the art" for its central, circular PPG sensor 118. Exhibit 1007 ¶41. PPG sensors with one or more circular arrays of rectangular photodiodes were well-known in the art many years before the July 2018 date of the D'842 Patent. Exhibit 1036, 6; Exhibit 1037, 24; Exhibit 1038, 2. Such circular arrays of rectangular photodiodes were known to improve the signal-to-noise ratio, and thus the measurement accuracy, of PPG sensors. Exhibit 1011, 4:1-65, 9:22-33, FIG. 7. Accordingly, a POSITA would have understood that Mendelson's FIG. 7 PPG sensor would be a suitable prior art PPG sensor to use for Yuen's PPG sensor 118.

87. A POSITA would have been motivated to use Mendelson's FIG. 7 PPG sensor as the central PPG sensor 118 of Yuen's device. Specifically, a POSITA would have been motivated to incorporate the "radially-symmetric photodetector array" of the sensor shown in FIG. 7 of Mendelson as the central PPG sensor 118 of Yuen's device, as shown below, to "maximize the detection of backscattered light," thereby increasing the signal-to-noise ratio, and thus improving the accuracy of, Yuen's sensor. Exhibit 1011, 4:6-62 (describing sensor performance-increasing benefit of "a sensor having six photodiodes arranged symmetrically around the

LEDs"), 9:22-40 (explaining that Mendelson's FIG. 7 sensor, with its circular array of 12 rectangular photodiodes (16/18), "minimiz[es] some of the measurement inaccuracies" in blood oxygen sensors).

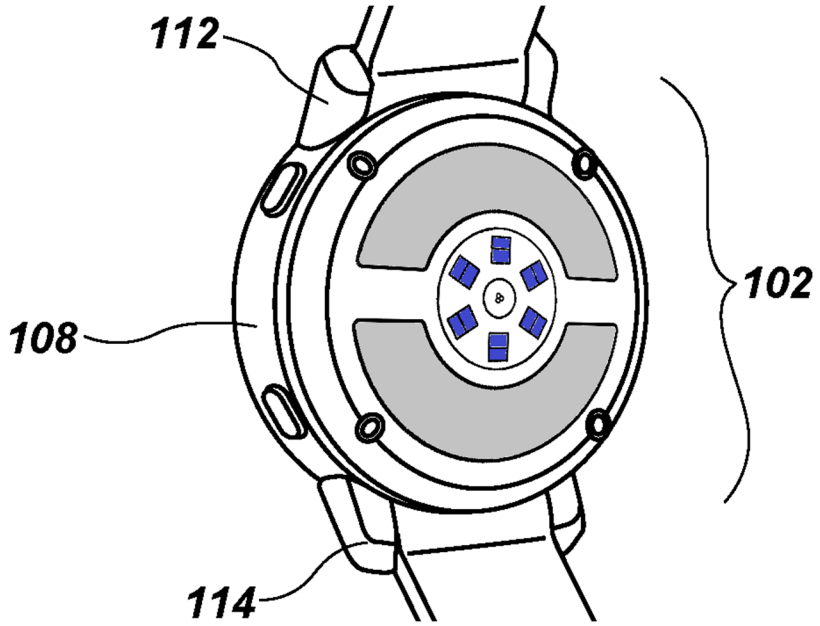

Exhibit 1007, FIG. 4 (combined with sensor from Exhibit 1011, FIG. 7). The pervasive use of radially-symmetric photodiode arrays in prior art optical sensors confirms that a POSITA in June 2018 would have been motivated to use Mendelson's well-known radially-symmetric photodiode array to improve the performance of Yuen's device using a well-known sensor design in a well-known way.

88. A POSITA further would have understood that using one of the six-photodiode arrays of Mendelson's FIG. 7 sensor with Yuen as shown below, rather than using both of Mendelson's photodiode arrays, would provide a well-known and

accurate PPG sensor design for Yuen's PPG sensor 118 while being less expensive and easier to construct than Mendelson's FIG. 7 sensor because of the use of fewer photodiodes.

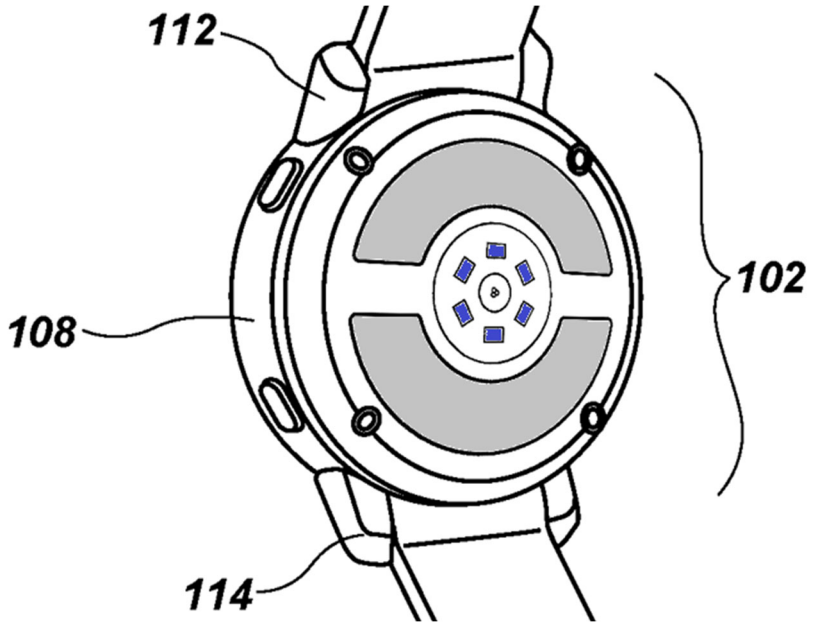

Exhibit 1007, FIG. 4 (combined with one six-photodiode array from Exhibit 1011, FIG. 7); Exhibit 1011, FIG. 7, 4:6-62 (describing sensor performance-increasing benefit of "a sensor having six photodiodes arranged symmetrically around the LEDs"); 9:22-34 (explaining that FIG. 7 sensor has two six-photodiode arrays, including an outer array (16) and an inner array (18)). A POSITA also would have been motivated to use more than six photodiodes in Yuen's single radially-symmetric array to improve the sensor's signal-to-noise ratio and thus, increase the accuracy of the sensor in a manner that was still less expensive and easier to construct than the two-array, 12-photodiode design of Mendelson's FIG. 7 sensor.

Exhibit 1011, 4:6-13 (increasing the "number of photodetectors" and their overall "active area" "increases the amount of backscattered light that can be detected" and thus achieves "improvements in signal-to-noise ratio").

89. The arc-shaped electrodes disclosed by Yuen (shown in gray below) are separated by a gap, which electrically isolates the electrodes from one another.

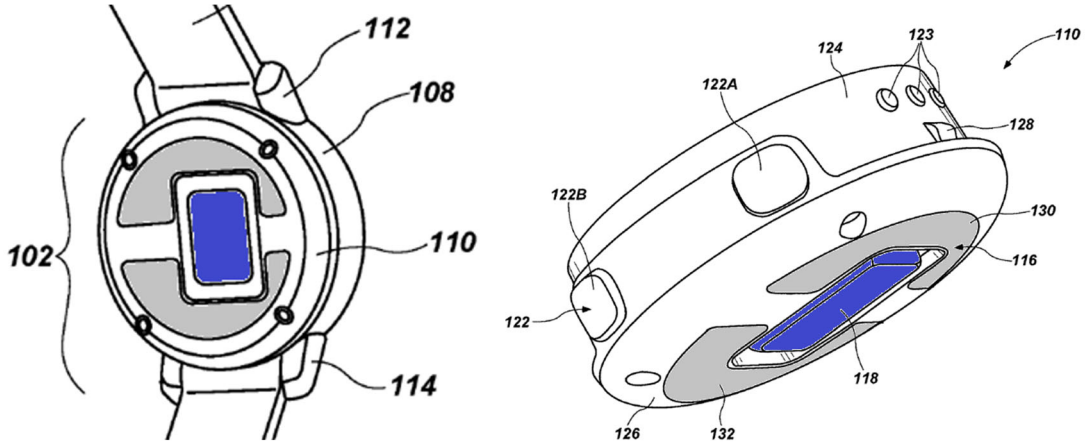

Exhibit 1007, FIGS. 1B (left), 3A (right). A POSITA would understand that arc-shaped electrodes must contact the user's skin in order to measure electrical impulses through the skin. *Id.* ¶¶34 ("The electrocardiogram sensor 116 ('ECG sensor 116') … may include at least two electrodes 130, 132 for contacting a user's skin (e.g., a user wearing the smartwatch assembly 100…. For instance, the ECG sensor 116 may include a sensor for detecting and recording electrical activity … in pulsating electrical waves [in] the skin of a user."), 36 ("Via contact with a user's skin, the ECG sensor 116 may perform (i.e., take) an electrocardiogram measurement of a user wearing the smartwatch assembly 100. For instance, the ECG sensor 116 may be configured to detect and measure a heart rate, an interbeat interval, and a heart

rate variability of a user. Furthermore, the ECG sensor 116 may be configured to generate a graph of voltage over time of the heart muscle beating (i.e., an 'EKG')."), claim 1 ("A smartwatch assembly comprising … an electrocardiogram sensor …, the electrocardiogram sensor having at least two electrodes configured to be placed in contact with a user's skin"). Yuen repeatedly explains that its arc-shaped electrodes 130, 132 are configured to maintain contact with the user's skin. *Id.* A POSITA would have known that it was advantageous to "increase the contact area of the skin-to-electrode interface to maintain lower impedance and exhibit better behavior in reducing motion artifacts." Exhibit 1043, 10. In view of these teachings, therefore, a POSITA would have been motivated to extend the ends of Yuen's arc-shaped electrodes closer together to maximize the surface area of the arc-shaped electrodes for contacting the user's skin. This motivation is consistent with the disclosure of Apple's own utility patent on the Apple Watch Series 4 sensor design, which teaches that the "first and second electrodes 412, 414" can be "arc-shaped" and "sized" to "improve electrical sensor efficiency" by "providing a sufficient area to provide good electrical contact between the electrodes 412, 414 and the skin…." Exhibit 1024, 17:22-28.

90. As explained above, the Apple Watch Series 4 underlying the claimed design includes a charging coil between its arc-shaped electrodes and the circular array of photodiodes. *Supra* Section VIII.B. A POSITA would have understood

that ECG electrodes, including the arc-shaped electrodes of Paulke, Yuen, and Fong were typically made of a conductive metal and/or coating. *See, e.g.*, Exhibit 1006, 14:29-32 ("galvanic skin response (GSR) sensors pads 122"); Exhibit 1043, 6-7 (showing that all categories of dry electrodes for cardiography involve metal or conductive material electrodes), 19 ("For some designs, a coating material is necessary to improve the conductivity of the electrode."). Prior art wireless chargers had charging coils (1832, below) generally occupying the outer circumference of the charger, which would need to align with the correspondingly located charging coil (1869, below) in the wearable device, as shown below.

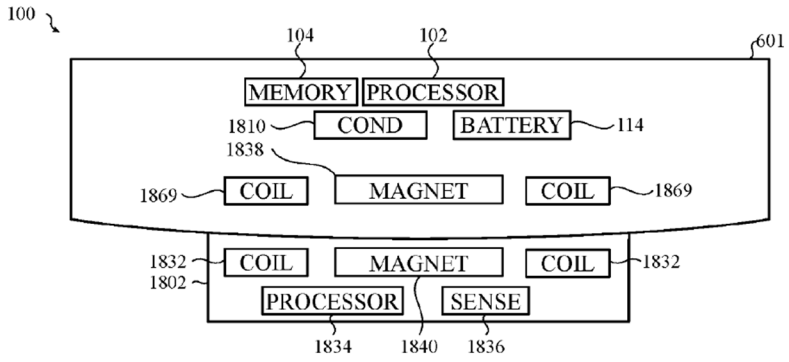

FIG. 19

Exhibit 1025, FIG. 19, 45:18-28 ("the complementary geometries [of the device 100 and charging dock 1802, above] may facilitate alignment of the electronic device and dock for efficient wireless power transfer."), 42:63-43:4 (explaining importance of aligning charging coil of device with charging coil of charger). A POSITA thus would have been motivated to shape Yuen's arc-shaped electrodes to ensure the electrodes did not overlap the area occupied by the charging coil of the device or the

area occupied by the charging coil of prior art wireless chargers, because using a "conductive member … between the transmitter-side coil [i.e., the charger] and the receiver-side coil [i.e., the device] was known to "imped[e] the transmission" of power, which "is not appropriate" for efficient wireless power transfer. Exhibit 1044, 13:25-32; *id.*, 13:33-44, FIG. 15 (summarizing experiments regarding wireless power transmission efficiency through different materials). This motivation is consistent with the disclosure of Apple's '157 patent, which teaches to size and position the arc-shaped electrodes as claimed in the D'842 Patent to "improve wireless communication [e.g., charging] efficiency" by avoiding interference with "electrical structures of a device [e.g., the Watch's charging coil]." Exhibit 1024, 17:22-31, FIGS. 4A, 5C-5D.

91. Bushnell discloses a wearable device with a convex housing component 104 (red, below) that protrudes from the back of the device, as shown in the following figures. Exhibit 1009, ¶37, FIGS. 1A, 2A. A POSITA would have understood the protruding housing component 104 of Bushnell (shown in red below) to be a convex protrusion. *Id.*

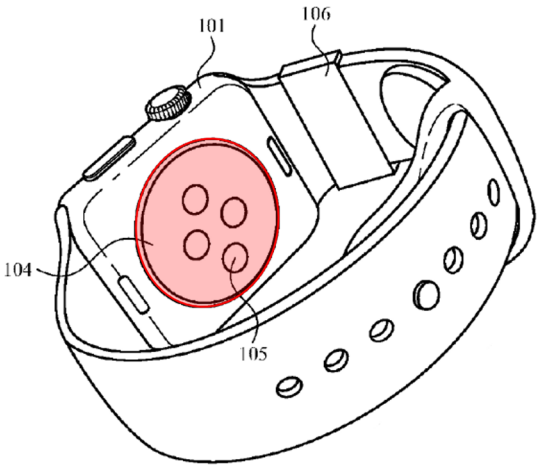

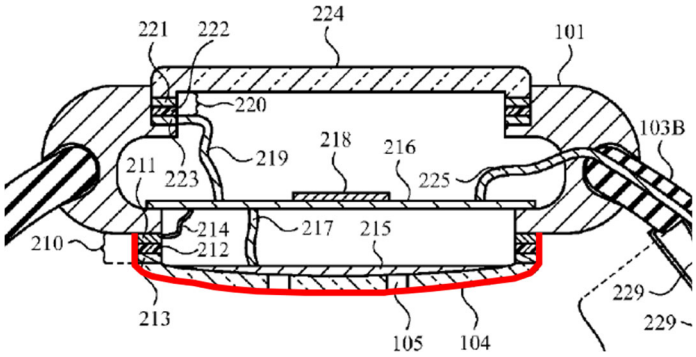

Id., FIGS. 1A (left), 2A (right). A POSITA would have been motivated to combine Bushnell's convex housing component (red, above) with Yuen's device because, by June 2018, it was known in the art that such a convex protruding feature would significantly improve the signal strength of the device's PPG sensor. For example, a prior art Masimo patent explains that "a convex [protrusion] … was found to help signal strength by about an order of magnitude." Exhibit 1030, 20:29-33. The Masimo patent teaches that a convex protrusion "can have significant impact on increasing the SNR" (i.e., the signal-to-noise ratio) of the PPG sensor, including a signal strength increase of ten times or more, as shown below.

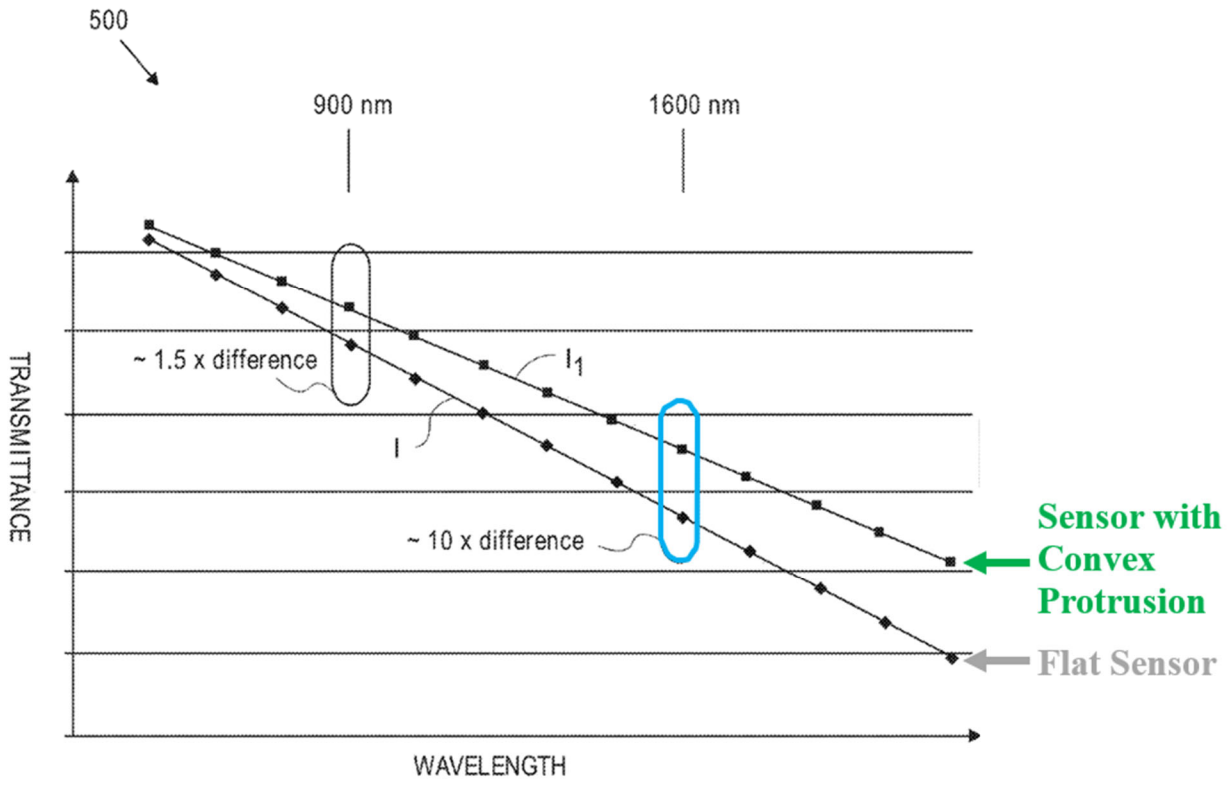

FIG. 5

Id., 21:9-43, FIG. 5. Thus, this prior art demonstrates that, by the time of the D'842 Patent in June 2018, those of ordinary skill in the art would have understood that convex protruding features like Bushnell's housing component 104 were known to increase signal strength in PPG sensors. *Id.*, 20:29-33, 21:9-43, FIG. 5. Consistent with my opinion that a POSITA would have been motivated to combine Bushnell's convex protrusion with Yuen's device to improve the signal strength of the device's PPG sensor, Apple and its expert argued during the parties' ITC Investigation that a POSITA would have had the same motivation to combine a convex protrusion with an optical sensor. Exhibit 1017, 75 ("A POSITA would have understood the benefits of including a convex protrusion, including to improve signal quality."); Exhibit

1021, 1210:13-1211:8 (Apple's expert, Dr. Warren, opining that "it was already well-known that a convex curvature itself could be a useful element in increasing signal quality.").

92. A POSITA also would have been motivated to combine Bushnell's convex housing component (red, above) with Yuen's device because it was known in the art that such a convex protruding feature would improve the contact (also called coupling) between the device's PPG sensor and the user's skin, resuling in more accurate measurements. Exhibit 1030, 20:52-55 (teaching that using "[r]igid materials [for the protrusion] can improve measurement accuracy of a blood analyte by conforming the measurement site to the contact area 370"; teaching that "[t]he contact area 370 [of the protrusion] can be an ideal shape for improving accuracy or reducing noise"). During the parties' ITC Investigation, Apple argued that the same motivation existed to combine a convex protrusion with an optical sensor as proposed herein. Exhibit 1017, 117 ("A POSITA would have known there are benefits to using a protrusion with a convex surface, including, for example, to provide better coupling and thus better measurements.").

D. GROUND 3: Obviousness Over Fong, Mendelson, and Bushnell

93. I understand that the obviousness inquiry for design patents is assessed from the perspective of a designer of ordinary skill in the art. As explained above in Section VI, a designer of ordinary skill in the art would have consulted and

collaborated with a POSITA, such as myself, regarding technical concepts outside of the designer's area of expertise. Accordingly, below, I provide technical discussion from the perspective of a POSITA that is relevant to whether the Apple Watch Series 4 sensor design claimed in the D'842 Patent would have been obvious to a designer of ordinary skill in the art over Fong, Mendelson, and Bushnell.

1. Motivation to Combine Fong with Mendelson and Bushnell

94. The prior art expressly suggested using known PPG sensors in wearable devices like Fong that include arc-shaped electrodes surrounding a central PPG sensor. Exhibit 1006, 15:9-18, FIGS. 1F-2A; Exhibit 1007 ¶¶41, FIGS. 1B, 3A, 4. PPG sensors with one or more circular arrays of rectangular photodiodes were well-known in the art many years before the July 2018 date of the D'842 Patent. Exhibit 1036, 6; Exhibit 1037, 24; Exhibit 1038, 2. Such circular arrays of rectangular photodiodes were known to improve the signal-to-noise ratio, and thus the measurement accuracy, of PPG sensors. Exhibit 1011, 4:1-65, 9:22-33, FIG. 7. Accordingly, a POSITA would have understood that Mendelson's FIG. 7 PPG sensor would be a suitable prior art PPG sensor to use in place of Fong's central PPG sensor.

95. A POSITA would have been motivated to use Mendelson's FIG. 7 PPG sensor as the central PPG sensor of Fong's device. Specifically, a POSITA would have been motivated to incorporate the "radially-symmetric photodetector array" of

the sensor shown in FIG. 7 of Mendelson as the central PPG sensor of Fong's device, as shown below, to "maximize the detection of backscattered light," thereby increasing the signal-to-noise ratio, and thus improving the accuracy of, Fong's sensor. Exhibit 1011, 4:6-62 (describing sensor performance-increasing benefit of "a sensor having six photodiodes arranged symmetrically around the LEDs"), 9:22-40 (explaining that Mendelson's FIG. 7 sensor, with its circular array of 12 rectangular photodiodes (16/18), "minimiz[es] some of the measurement inaccuracies" in blood oxygen sensors).

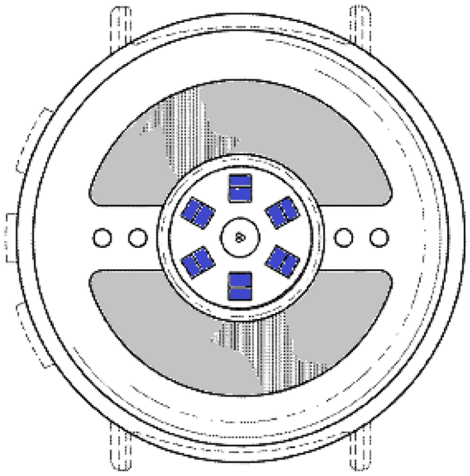

Exhibit 1008, FIG. 4 (combined with sensor from Exhibit 1011, FIG. 7). The pervasive use of radially-symmetric photodiode arrays in prior art optical sensors confirms that a POSITA in June 2018 would have been motivated to use Mendelson's well-known radially-symmetric photodiode array to improve the performance of Fong's device using a well-known sensor design in a well-known way.

96. A POSITA further would have understood that using one of the six-photodiode arrays of Mendelson's FIG. 7 sensor with Fong as shown below, rather than using both of Mendelson's photodiode arrays, would provide a well-known and accurate PPG sensor design for Fong's PPG sensor while being less expensive and easier to construct than Mendelson's FIG. 7 sensor because of the use of fewer photodiodes.

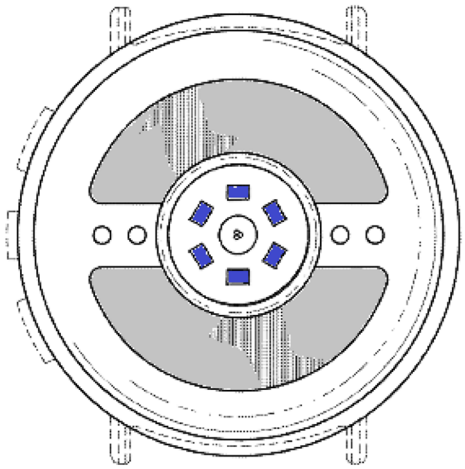

Exhibit 1008, FIG. 4 (combined with one six-photodiode array from Exhibit 1011, FIG. 7); Exhibit 1011, FIG. 7, 4:6-62 (describing sensor performance-increasing benefit of "a sensor having six photodiodes arranged symmetrically around the LEDs"); 9:22-34 (explaining that FIG. 7 sensor has two six-photodiode arrays, including an outer array (16) and an inner array (18)). A POSITA also would have been motivated to use more than six photodiodes in Fong's single radially-symmetric array to improve the sensor's signal-to-noise ratio and thus, increase the accuracy of the sensor in a manner that was still less expensive and easier to

construct than the two-array, 12-photodiode design of Mendelson's FIG. 7 sensor. Exhibit 1011, 4:6-13 (increasing the "number of photodetectors" and their overall "active area" "increases the amount of backscattered light that can be detected" and thus achieves "improvements in signal-to-noise ratio").

97. The arc-shaped electrodes disclosed by Fong (shown in gray below) are separated by a gap, which electrically isolates the electrodes from one another.

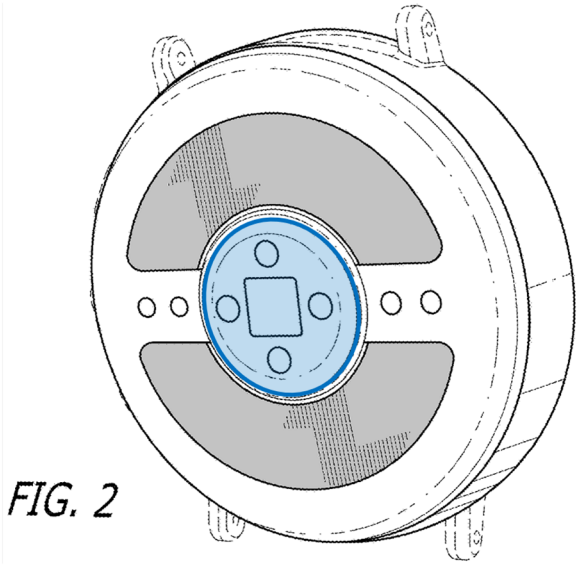

Exhibit 1008, FIG. 2. A POSITA would understand that arc-shaped electrodes must contact the user's skin in order to measure electrical impulses through the skin. *See, e.g.*, Exhibit 1006, 14:29-32, 15:3-5 (teaching that arc-shaped electrodes "may protrude by any suitable amount … to help maintain contact between [the electrodes] and the wearer's wrist when the biosensor module 100 is worn"), 5:31-32 ("[T]he wearable articles may hold the biosensors in a way that promotes accuracy of the measurements by the biosensors."), 6:5-7 ("Some embodiments relate to a wearable

article housing one or more electronic components that maintains one or more of the electronic components in contact with the wearer's wrist."), 13:13-16 ("one or more biosensors positioned and configured to be held by the wrist band assembly in contact with … the wearer's wrist"), 16:1-4; Exhibit 1007 ¶¶34 ("The electrocardiogram sensor 116 ('ECG sensor 116') … may include at least two electrodes 130, 132 for contacting a user's skin (e.g., a user wearing the smartwatch assembly 100…. For instance, the ECG sensor 116 may include a sensor for detecting and recording electrical activity … in pulsating electrical waves [in] the skin of a user."), 36 ("Via contact with a user's skin, the ECG sensor 116 may perform (i.e., take) an electrocardiogram measurement of a user wearing the smartwatch assembly 100. For instance, the ECG sensor 116 may be configured to detect and measure a heart rate, an interbeat interval, and a heart rate variability of a user. Furthermore, the ECG sensor 116 may be configured to generate a graph of voltage over time of the heart muscle beating (i.e., an 'EKG')."), claim 1 ("A smartwatch assembly comprising … an electrocardiogram sensor …, the electrocardiogram sensor having at least two electrodes configured to be placed in contact with a user's skin"). A POSITA would have known that it was advantageous to "increase the contact area of the skin-to-electrode interface to maintain lower impedance and exhibit better behavior in reducing motion artifacts." Exhibit 1043, 10. Therefore, in view of these teachings, a POSITA would have been motivated to

extend the ends of Fong's arc-shaped electrodes closer together to maximize the surface area of the arc-shaped electrodes for contacting the user's skin. This motivation is consistent with the disclosure of Apple's own utility patent on the Apple Watch Series 4 sensor design, which teaches that the "first and second electrodes 412, 414" can be "arc-shaped" and "sized" to "improve electrical sensor efficiency" by "providing a sufficient area to provide good electrical contact between the electrodes 412, 414 and the skin…." Exhibit 1024, 17:22-28.

98. As explained above, the Apple Watch Series 4 underlying the claimed design includes a charging coil between its arc-shaped electrodes and the circular array of photodiodes. *Supra* Section VIII.B. A POSITA would have understood that ECG electrodes, including the arc-shaped electrodes of Paulke, Yuen, and Fong were typically made of a conductive metal and/or coating. *See, e.g.*, Exhibit 1006, 14:29-32 ("galvanic skin response (GSR) sensors pads 122"); Exhibit 1043, 6-7 (showing that all categories of dry electrodes for cardiography involve metal or conductive material electrodes), 19 ("For some designs, a coating material is necessary to improve the conductivity of the electrode."). Prior art wireless chargers had charging coils (1832, below) generally occupying the outer circumference of the charger, which would need to align with the correspondingly located charging coil (1869, below) in the wearable device, as shown below.

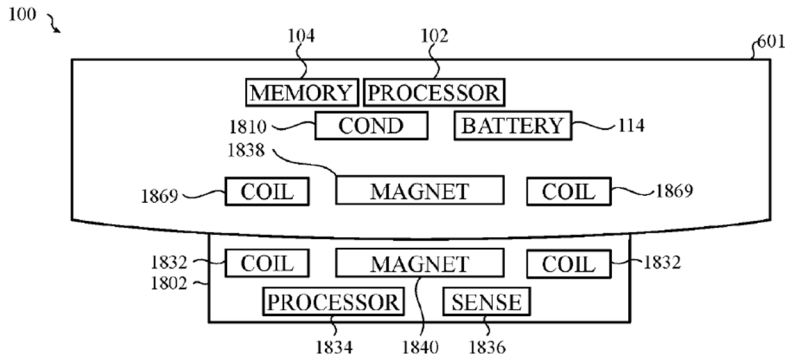

FIG. 19

Exhibit 1025, FIG. 19, 45:18-28 ("the complementary geometries [of the device 100 and charging dock 1802, above] may facilitate alignment of the electronic device and dock for efficient wireless power transfer."), 42:63-43:4 (explaining importance of aligning charging coil of device with charging coil of charger). A POSITA thus would have been motivated to shape Fong's arc-shaped electrodes to ensure the electrodes did not overlap the area occupied by the charging coil of the device or the area occupied by the charging coil of prior art wireless chargers, because using a "conductive member … between the transmitter-side coil [i.e., the charger] and the receiver-side coil [i.e., the device] was known to "imped[e] the transmission" of power, which "is not appropriate" for efficient wireless power transfer. Exhibit 1044, 13:25-32; *id.*, 13:33-44, FIG. 15 (summarizing experiments regarding wireless power transmission efficiency through different materials). This motivation is consistent with the disclosure of Apple's '157 patent, which teaches to size and position the arc-shaped electrodes as claimed in the D'842 Patent to "improve wireless communication [e.g., charging] efficiency" by avoiding interference with

"electrical structures of a device [e.g., the Watch's charging coil]." Exhibit 1024, 17:22-31, FIGS. 4A, 5C-5D.

99. Bushnell discloses a wearable device with a convex housing component 104 (red, below) that protrudes from the back of the device, as shown in the following figures. Exhibit 1009, ¶37, FIGS. 1A, 2A. A POSITA would have understood the protruding housing component 104 of Bushnell (shown in red below) to be a convex protrusion. *Id.*

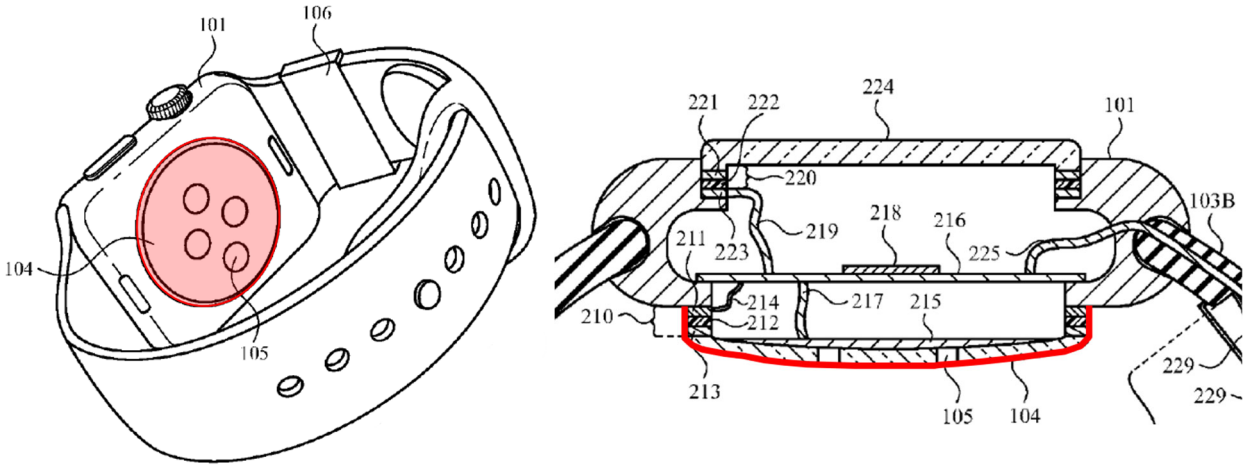

Id., FIGS. 1A (left), 2A (right). A POSITA would have been motivated to combine Bushnell's convex housing component (red, above) with Fong's device because it was known in the art that such a convex protruding feature would improve the signal strength of the device's PPG sensor. For example, as explained above, a prior art Masimo patent explains that "a convex [protrusion] … was found to help signal strength by about an order of magnitude." Exhibit 1030, 20:29-33. The same Masimo patent also teaches that a convex protrusion "can have significant impact

on increasing the SNR" (i.e., the signal-to-noise ratio) of the PPG sensor, including a signal strength increase of ten times or more, as shown below.

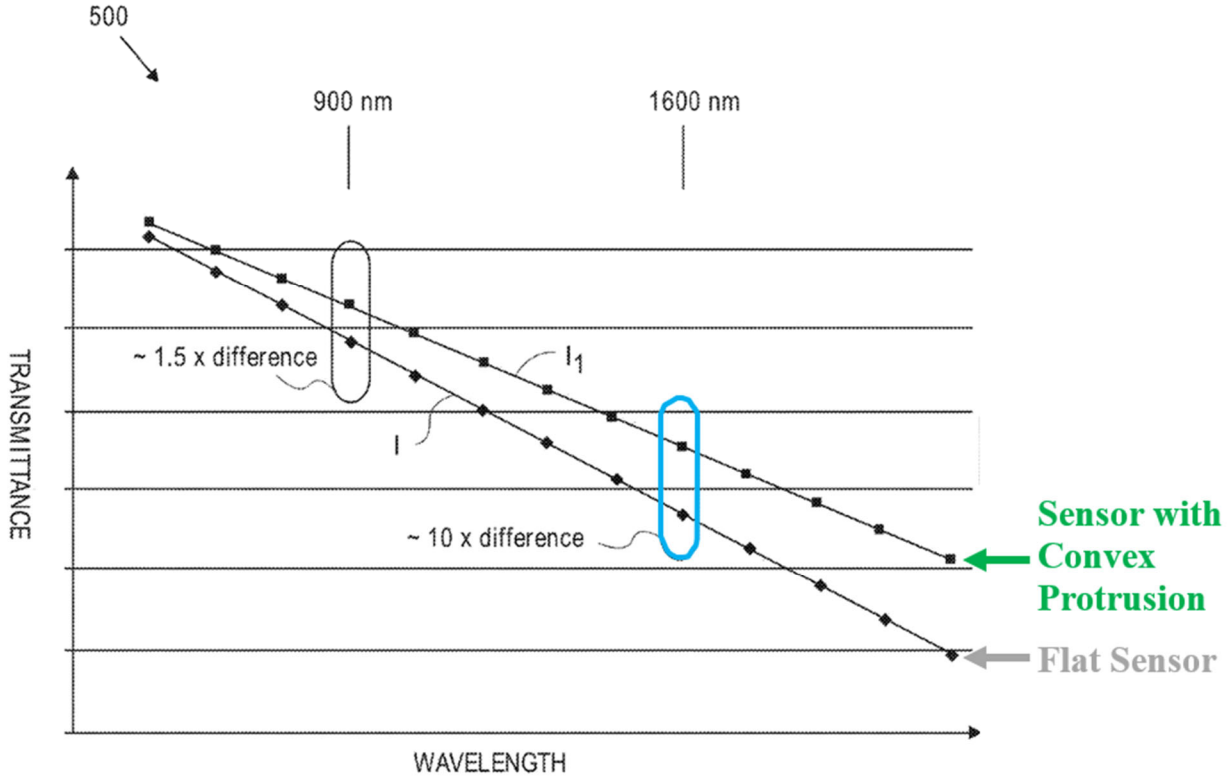

FIG. 5

Id., 21:9-43, FIG. 5. Thus, this prior art demonstrates that, by the time of the D'842 Patent in June 2018, those of ordinary skill in the art would have understood that convex protruding features like Bushnell's housing component 104 were known to increase signal strength in PPG sensors. *Id.*, 20:29-33, 21:9-43, FIG. 5. Consistent with my opinion that a POSITA would have been motivated to combine Bushnell's convex protrusion with Fong's device to improve the signal strength of the device's PPG sensor, Apple and its expert argued during the parties' ITC Investigation that a POSITA would have had the same motivation to combine a convex protrusion with

an optical sensor. Exhibit 1017, 75 ("A POSITA would have understood the benefits of including a convex protrusion, including to improve signal quality."); Exhibit 1021, 1210:13-1211:8 (Apple's expert, Dr. Warren, opining that "it was already well-known that a convex curvature itself could be a useful element in increasing signal quality.").

100. A POSITA also would have been motivated to combine Bushnell's convex housing component (red, above) with Fong's device because it was known in the art that such a convex protruding feature would improve the contact (also called coupling) between the device's PPG sensor and the user's skin, resuling in more accurate measurements. Exhibit 1030, 20:52-55 (teaching that using "[r]igid materials [for the protrusion] can improve measurement accuracy of a blood analyte by conforming the measurement site to the contact area 370"; teaching that "[t]he contact area 370 [of the protrusion] can be an ideal shape for improving accuracy or reducing noise"). During the parties' ITC Investigation, Apple argued that the same motivation existed to combine a convex protrusion with an optical sensor as proposed herein. Exhibit 1017, 117 ("A POSITA would have known there are benefits to using a protrusion with a convex surface, including, for example, to provide better coupling and thus better measurements.").

X. CONCLUSION

101. I reserve the right to supplement my above analyses and opinions in the future to respond to any information, arguments, or positions Apple may raise, taking account of new information as it becomes available to me.