US008566612B2

(12) **United States Patent**
Davis et al.

(10) **Patent No.: US 8,566,612 B2**
(45) **Date of Patent: *Oct. 22, 2013**

(54) **SYSTEM AND METHOD FOR A SECURE I/O INTERFACE**

(75) Inventors: **John M. Davis**, Brentwood, TN (US); **Richard Takahashi**, Phoenix, AZ (US)

(73) Assignee: **Exelis, Inc.**, McLean, VA (US)

(*) Notice: Subject to any disclaimer, the term of this patent is extended or adjusted under 35 U.S.C. 154(b) by 0 days.

This patent is subject to a terminal disclaimer.

(21) Appl. No.: **12/697,112**

(22) Filed: **Jan. 29, 2010**

(65) **Prior Publication Data**

US 2010/0169636 A1 Jul. 1, 2010

Related U.S. Application Data

(63) Continuation of application No. 10/903,785, filed on Jul. 30, 2004, now Pat. No. 7,685,436.

(60) Provisional application No. 60/507,976, filed on Oct. 2, 2003.

(51) **Int. Cl.**

H04L 12/26	(2006.01)
H04L 29/06	(2006.01)
G06F 11/14	(2006.01)
G06F 12/14	(2006.01)

(52) **U.S. Cl.**
USPC **713/189**; 370/218; 713/153; 726/23

(58) **Field of Classification Search**
None
See application file for complete search history.

(56) **References Cited**

U.S. PATENT DOCUMENTS

6,157,955	A *	12/2000	Narad et al.	709/228
6,788,800	B1 *	9/2004	Carr et al.	382/100
7,331,061	B1 *	2/2008	Ramsey et al.	726/23
7,493,659	B1 *	2/2009	Wu et al.	726/26
2003/0014627	A1 *	1/2003	Krishna et al.	713/153
2003/0084342	A1 *	5/2003	Girard	713/201
2003/0196081	A1 *	10/2003	Savarda et al.	713/153

* cited by examiner

Primary Examiner — David Garcia Cervetti
Assistant Examiner — Fatoumata Traore
(74) *Attorney, Agent, or Firm* — Davidson, Berquist, Jackson & Gowdey LLP

(57) **ABSTRACT**

A security processor performs all or substantially all security and network processing to provide a secure I/O interface system to protect computing hardware from unauthorized access or attack. The security processor sends and receives all incoming and outgoing data packets for a host device and includes a packet engine, coupled to a local data bus, to process the incoming and outgoing packets. The processor further comprises a cryptographic core coupled to the packet engine to provide encryption and decryption processing for packets processed by the packet engine. The packet engine also handles classification processing for the incoming and outgoing packets. A modulo engine may be coupled to the local data bus.

26 Claims, 10 Drawing Sheets

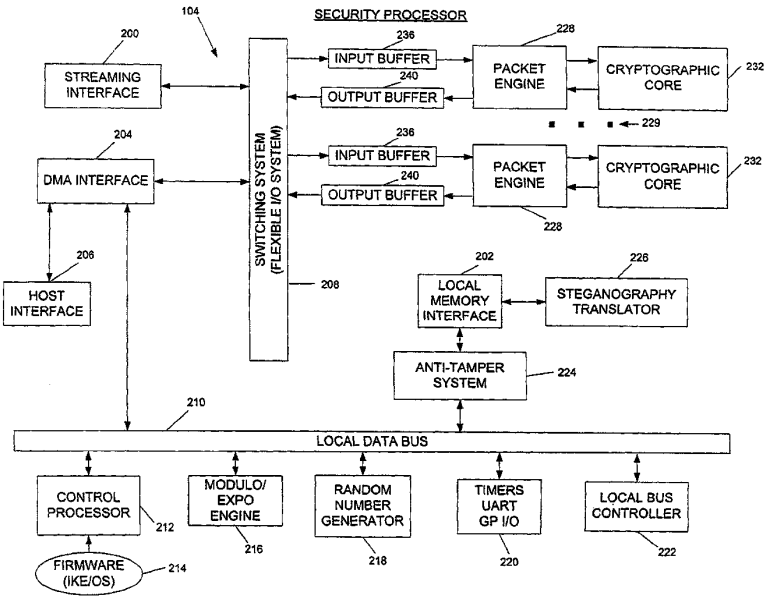

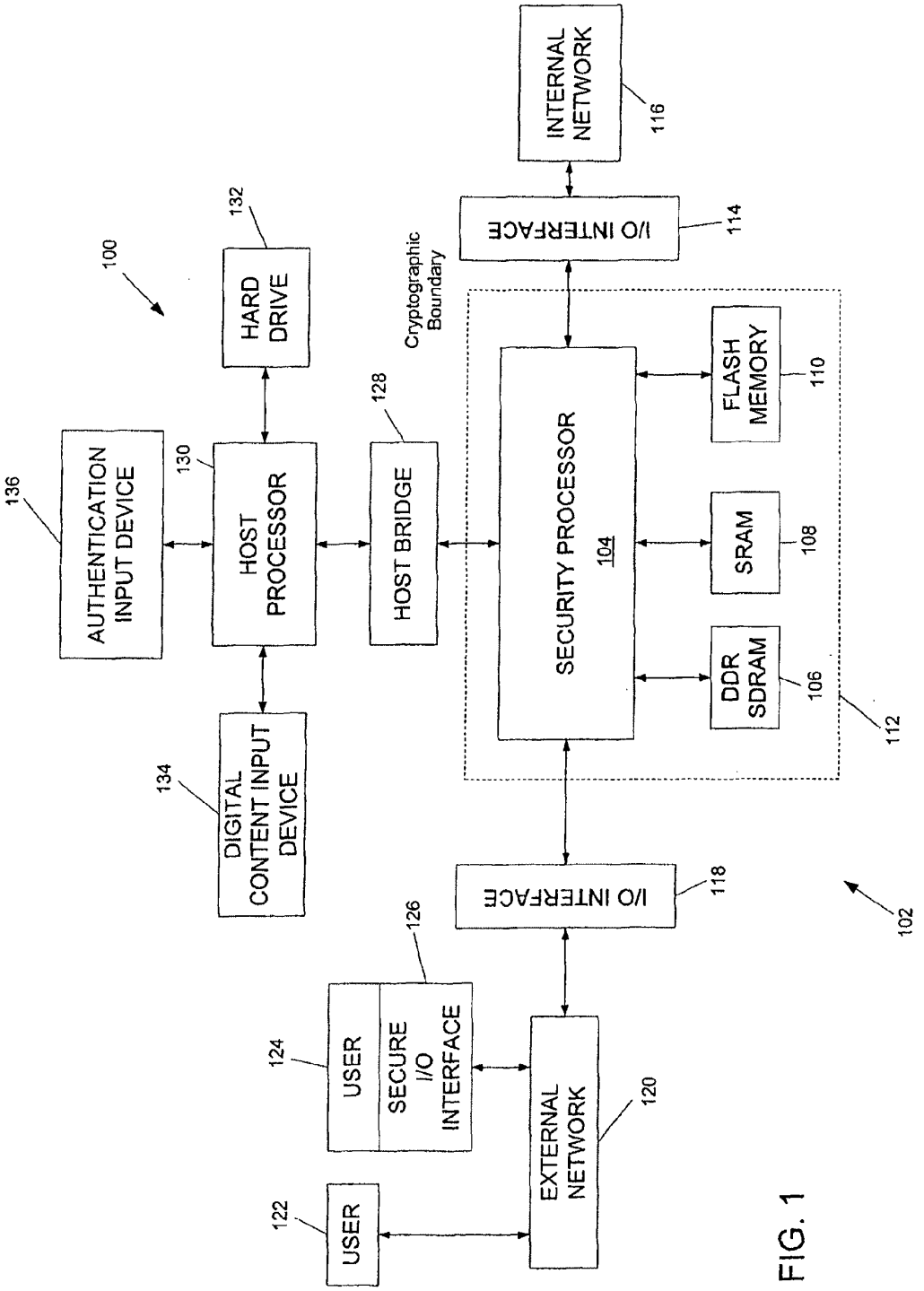
100
AUTHENTICATION INPUT DEVICE
136
HOST PROCESSOR
130
HARD DRIVE
132
DIGITAL CONTENT INPUT DEVICE
134
HOST BRIDGE
128
Cryptographic Boundary
SECURITY PROCESSOR
104
DDR SDRAM
106
SRAM
108
FLASH MEMORY
110
112
I/O INTERFACE
114
INTERNAL NETWORK
116
I/O INTERFACE
118
EXTERNAL NETWORK
120
USER
122
USER
124
SECURE I/O INTERFACE
126
102

FIG. 1

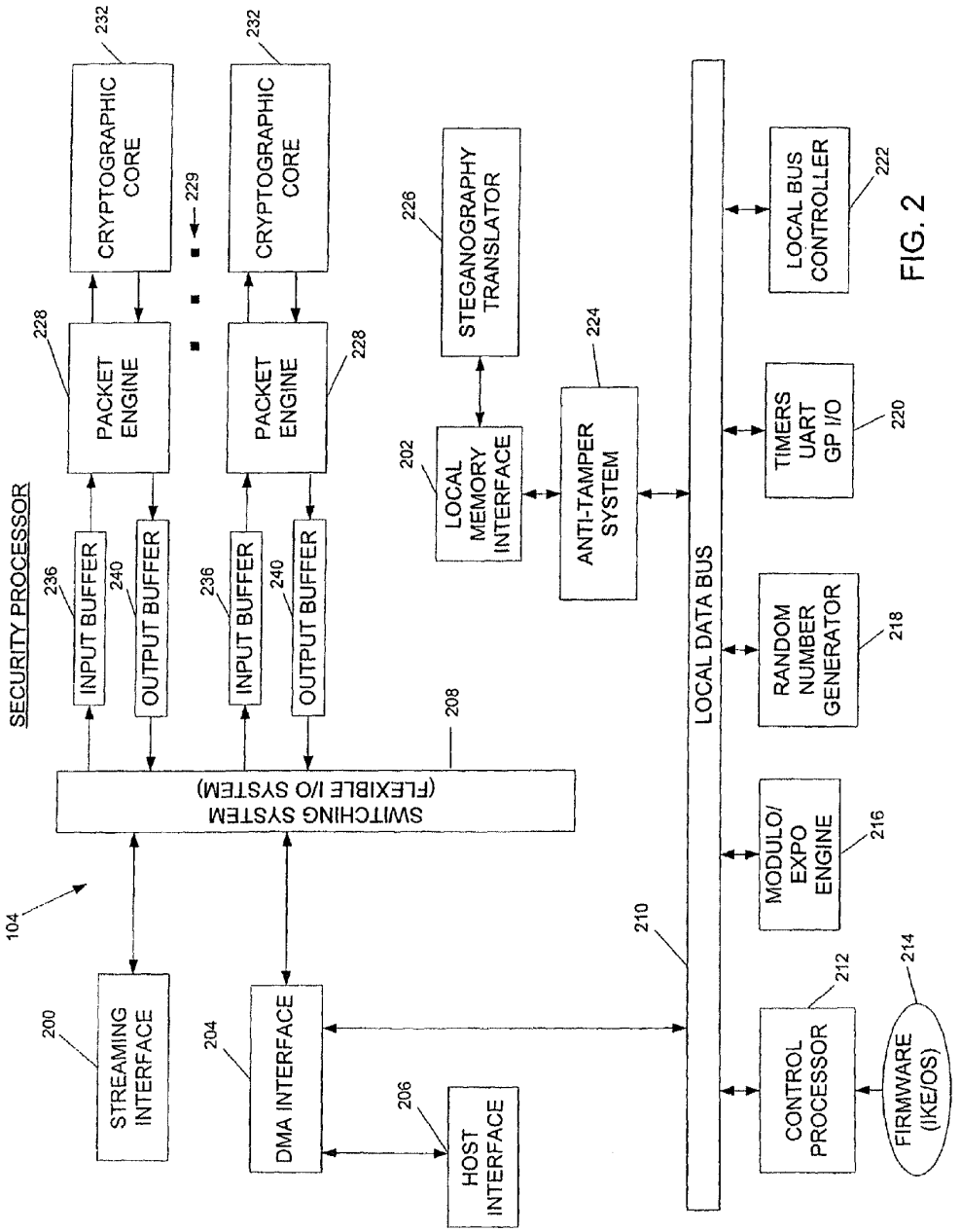
SECURITY PROCESSOR
104
STREAMING INTERFACE
200
DMA INTERFACE
204
HOST INTERFACE
206
SWITCHING SYSTEM (FLEXIBLE I/O SYSTEM)
208
INPUT BUFFER
236
OUTPUT BUFFER
240
PACKET ENGINE
228
CRYPTOGRAPHIC CORE
232
229
LOCAL MEMORY INTERFACE
202
STEGANOGRAPHY TRANSLATOR
226
ANTI-TAMPER SYSTEM
224
LOCAL DATA BUS
210
CONTROL PROCESSOR
212
FIRMWARE (IKE/OS)
214
MODULO/ EXPO ENGINE
216
RANDOM NUMBER GENERATOR
218
TIMERS UART GP I/O
220
LOCAL BUS CONTROLLER
222

FIG. 2

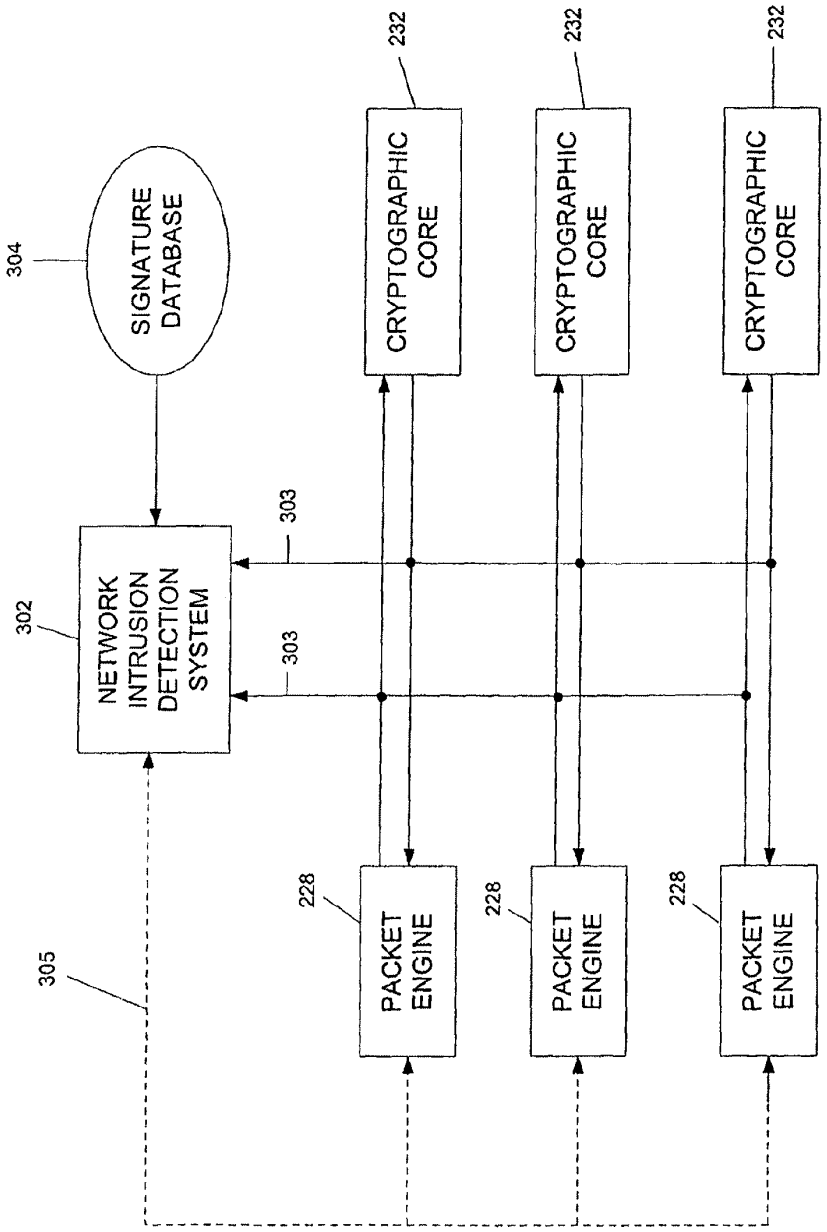
304
SIGNATURE DATABASE
302
NETWORK INTRUSION DETECTION SYSTEM
303
303
305
232
CRYPTOGRAPHIC CORE
232
CRYPTOGRAPHIC CORE
232
CRYPTOGRAPHIC CORE
228
PACKET ENGINE
228
PACKET ENGINE
228
PACKET ENGINE

FIG. 3

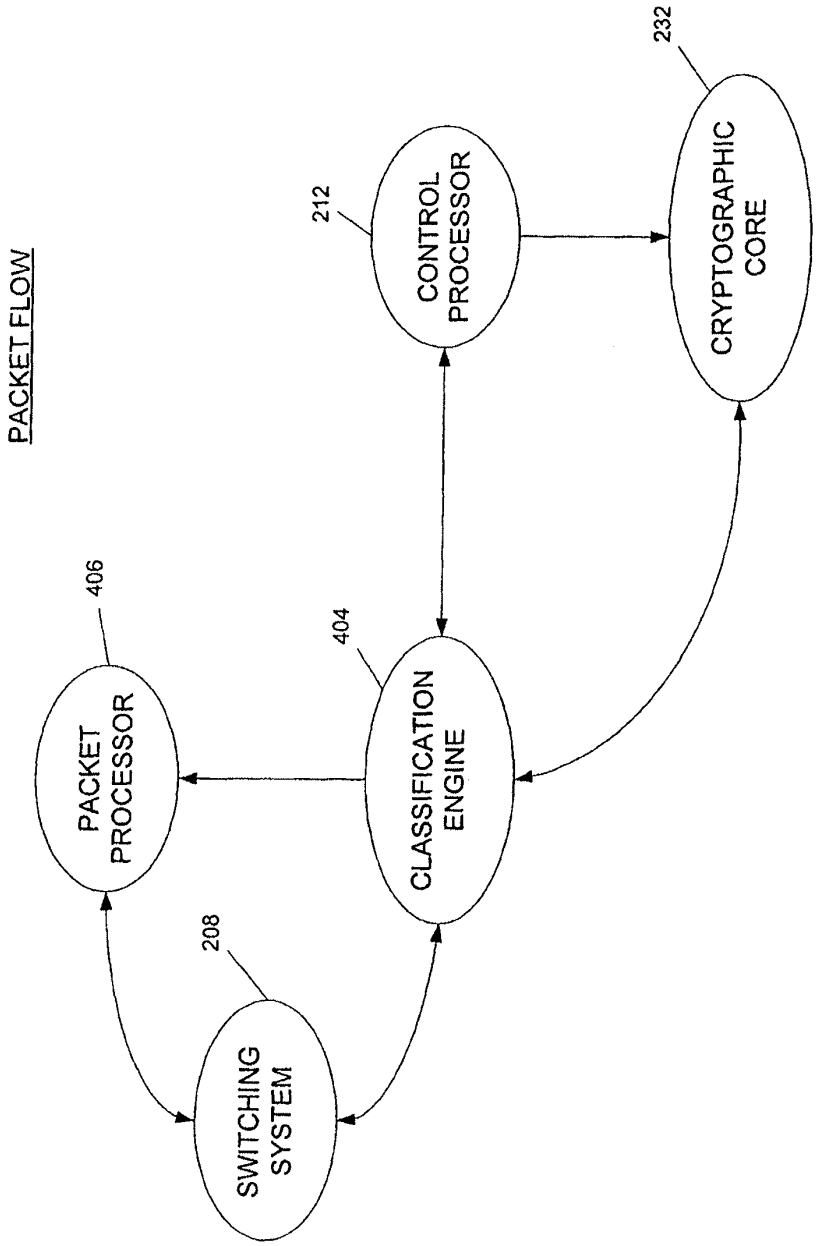
PACKET FLOW
406
PACKET PROCESSOR
208
SWITCHING SYSTEM
404
CLASSIFICATION ENGINE
212
CONTROL PROCESSOR
232
CRYPTOGRAPHIC CORE

FIG. 4

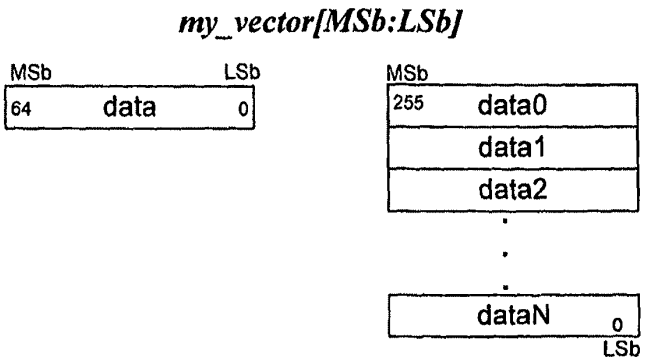
my_vector[MSb:LSb]
MSb
LSb
64
data
0
MSb
255
data0
data1
data2
dataN
0
LSb

FIG. 5

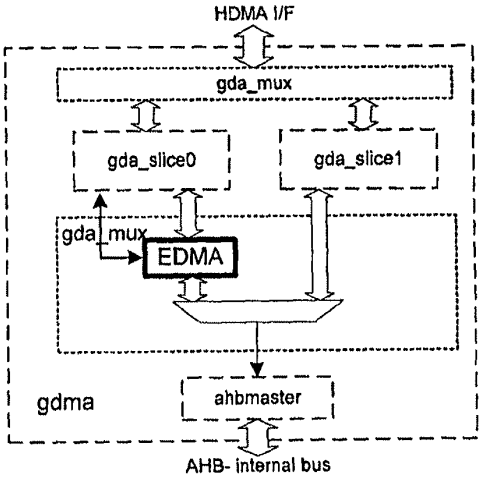
HDMA I/F
gda_mux
gda_slice0
gda_slice1
gda_mux
EDMA
gdma
ahbmaster
AHB- internal bus

FIG. 6

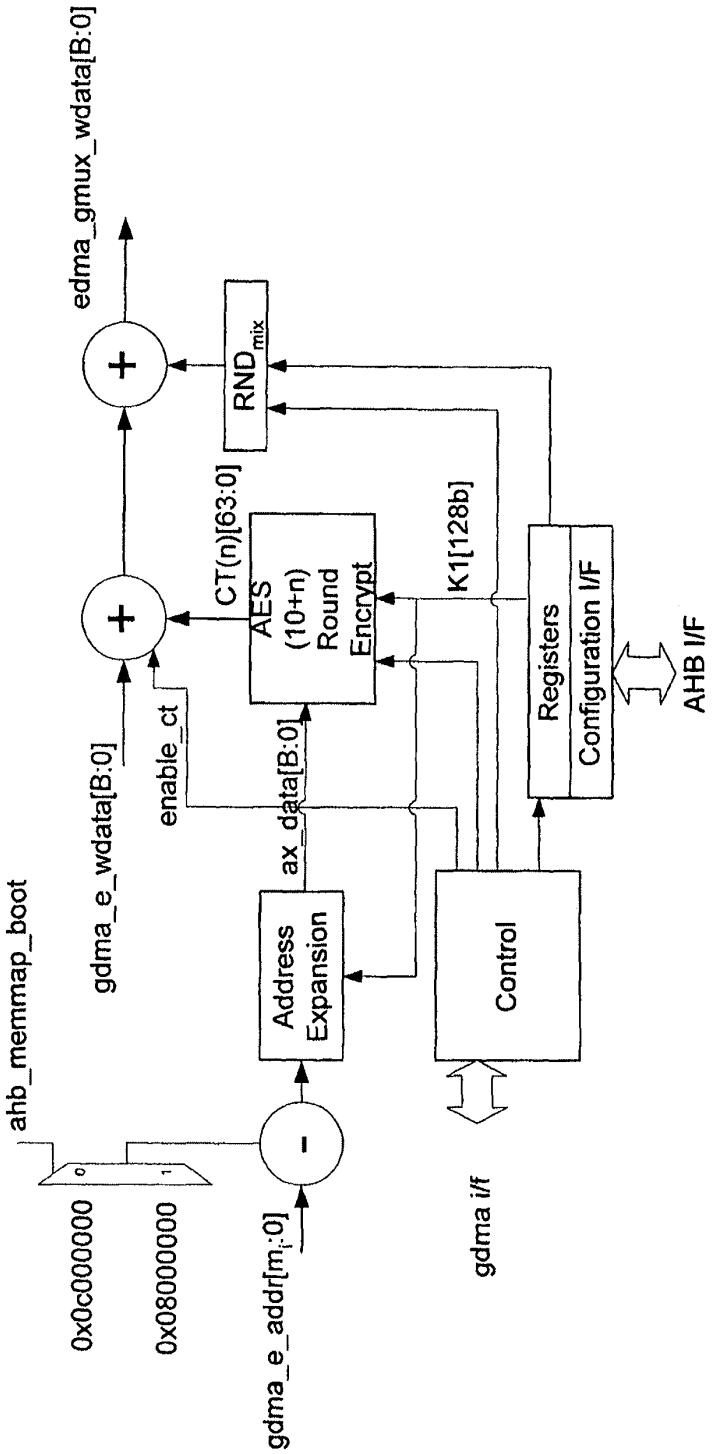
edma_gmux_wdata[B:0]
+
RND_mix
+
CT(n)[63:0]
AES (10+n) Round Encrypt
K1[128b]
Registers
Configuration I/F
AHB I/F
gdma_e_wdata[B:0]
enable_ct
ax_data[B:0]
ahb_memmap_boot
Address Expansion
Control
0x0c000000
0x08000000
-
gdma_e_addr[m_i:0]
gdma i/f

FIG. 7

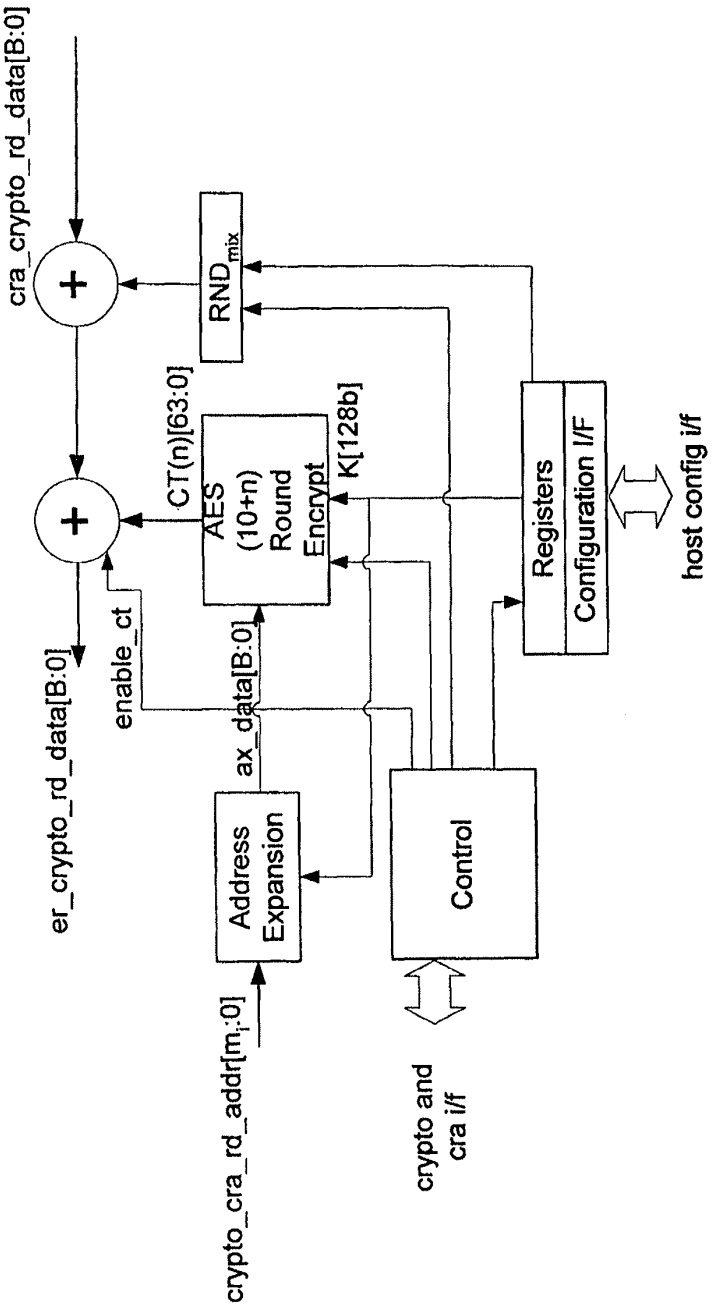
cra_crypto_rd_data[B:0]
+
RND_mix
+
CT(n)[63:0]
AES
(10+n)
Round
Encrypt
K[128b]
Registers
Configuration I/F
host config i/f
er_crypto_rd_data[B:0]
enable_ct
ax_data[B:0]
Address
Expansion
Control
crypto_cra_rd_addr[m_i:0]
crypto and
cra i/f

FIG. 8

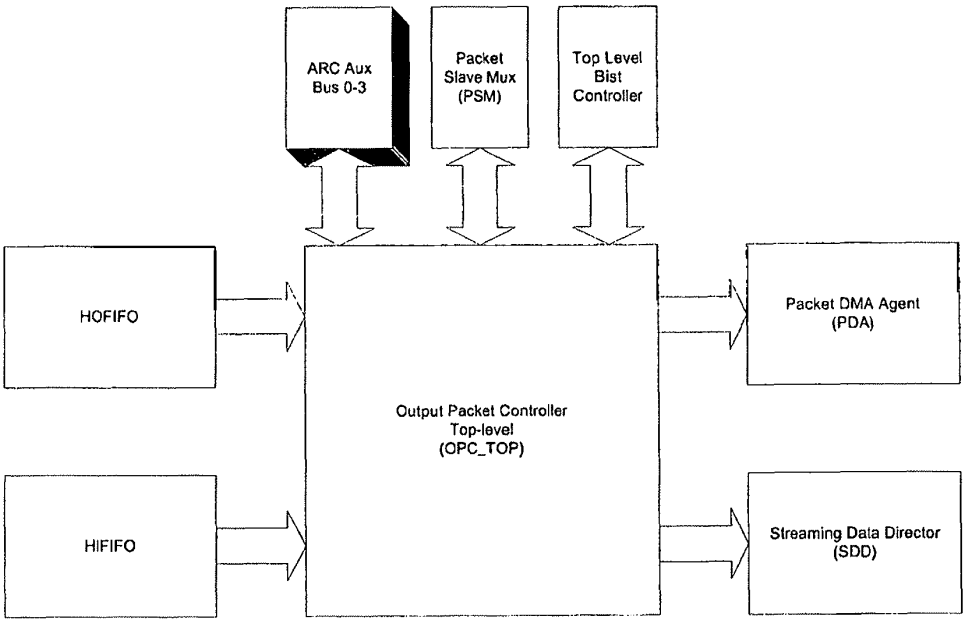

OPC Interfaces

FIG. 9

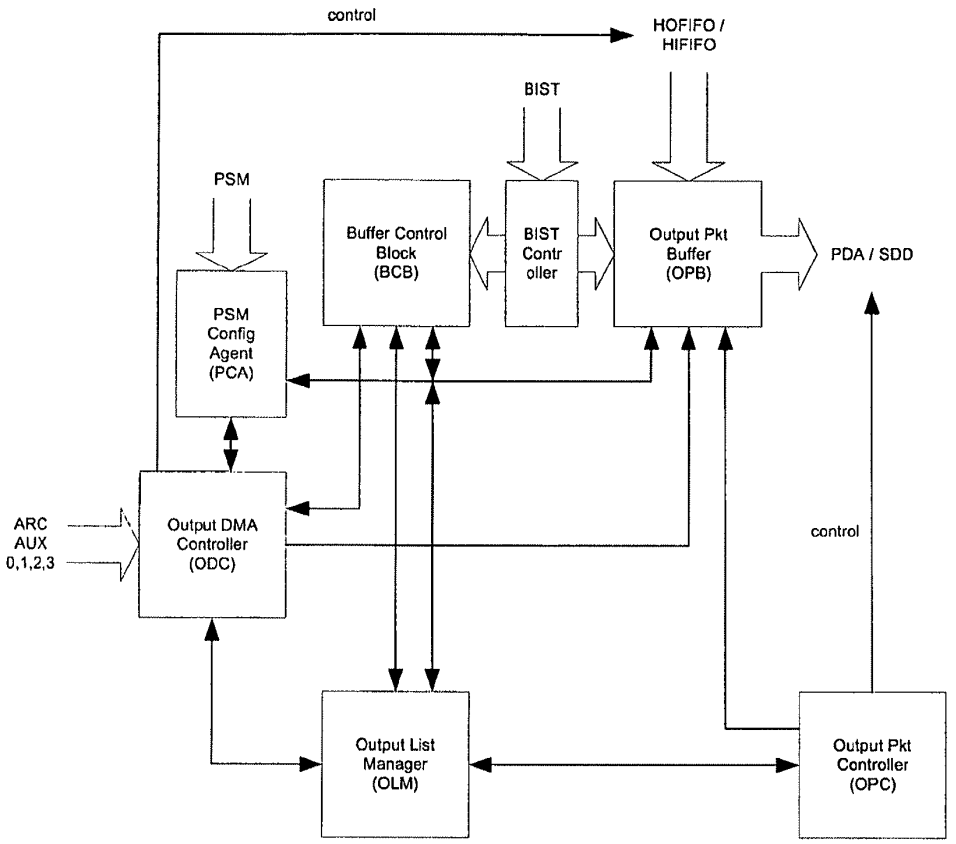

OPC Internal Block Diagram

Notation:
PDA=Packet DMA Agent, forwards packets to host or connected entity via DMA.
SDD=Streaming Data Director. The SDD transfers packets to Streaming IO (e.g. GMII, PL-3, etc).
PCA= PSM Config Agent module enables host access to some of the OLM registers, and it contains a few configuration registers itself. Also, the PSM can access the OPB and the BCB RAMs (allowing host access).

FIG. 10

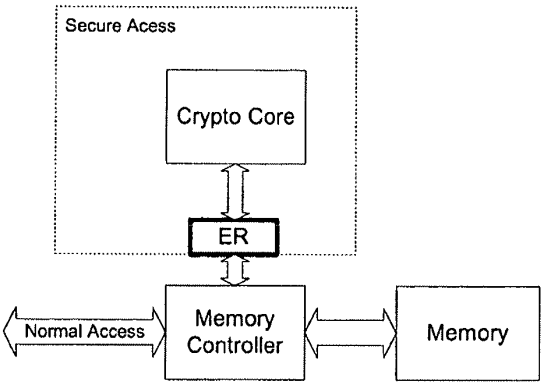
Secure Acess
Crypto Core
ER
Normal Access
Memory Controller
Memory

FIG. 11

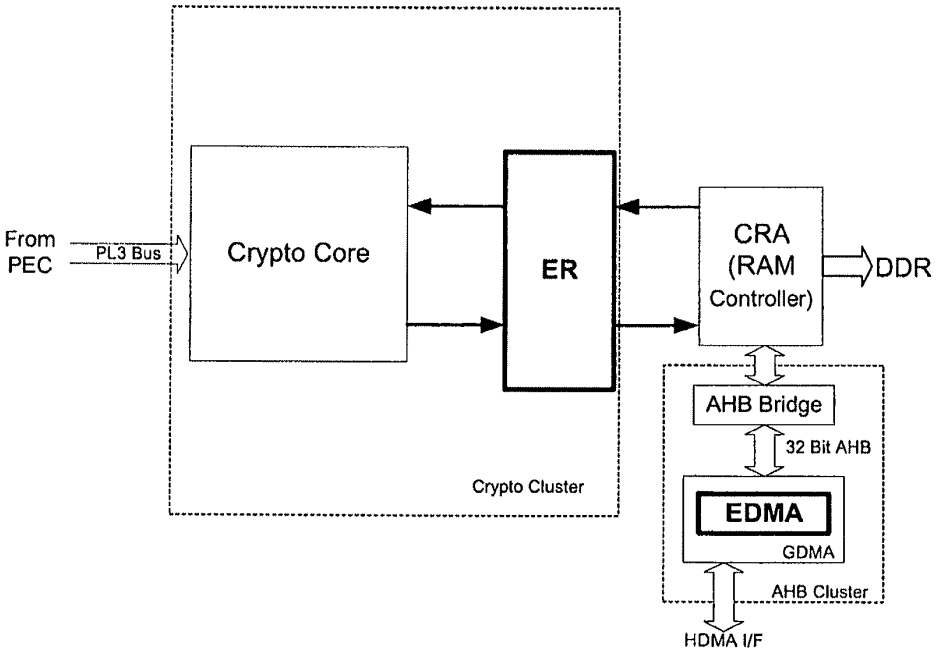
From PEC
PL3 Bus
Crypto Core
ER
CRA (RAM Controller)
DDR
AHB Bridge
32 Bit AHB
EDMA
GDMA
AHB Cluster
Crypto Cluster
HDMA I/F

FIG. 12

SYSTEM AND METHOD FOR A SECURE I/O INTERFACE

RELATED APPLICATION

This application is a continuation of and claims benefit to U.S. patent application Ser. No. 10/903,785, filed on Jul. 30, 2004, now U.S. Pat. No. 7,685,436 which is a non-provisional application claiming benefit under 35 U.S.C. sec. 119(e) of U.S. Provisional Application Ser. No. 60/507,976, filed Oct. 2, 2003, both of which are incorporated by reference herein.

FIELD OF THE INVENTION

The present invention relates in general to data communications, and particularly to secure cryptographic communications, and more particularly to a secure input/output (I/O) interface system for a computing device such as, for example, a host computer communicating using internet protocol (IP) data packets or other datagrams.

BACKGROUND OF THE INVENTION

Trusted internal computer networks are typically protected from un-trusted external computer networks by routers or other gateway systems that provide different types of firewall functionality. Security processing performed by related systems may also provide additional protection. For example, a computer in the internal network may establish a virtual private network (VPN) session with a computer in the external network. The host processor of the computer or a dedicated security processor coupled to the router or other gateway system typically performs the security processing necessary to support the VPN. In addition, a dedicated network processor may be coupled to the security processor and/or the host processor to handle network packet processing functions.

Network interface cards (NIC) often provide a computer's physical connection to its trusted internal network. More specifically, a NIC connects a personal computer, server or workstation to a local area network (LAN) and has two primary interfaces: the network interface and the host bus interface. NICs are typically low-cost ASIC-based products designed for simple buffering and data transfer.

It is desired that communications to and from a trusted computer be secure and that communication speeds be improved. However, providing firewall, network processing and security functionalities in different systems, which are often made by different manufacturers, provides increased opportunities for snooping or other techniques that may permit an unauthorized person to gain access to ongoing communications or to discover key or other security data when it is exchanged between subsystems. For example, if certain security functions associated with securing communications over a NIC are handled by the computer's host processor and/or by other computers on the internal network, then the communications may be more easily attacked or otherwise accessed or interfered with by an unauthorized person, who may attempt to exploit easier snooping access or other vulnerabilities presented by the processing of security functions by a host processor or another server on the network.

The use of different systems to perform different portions of security and network processing also requires additional processing and interfaces for coordinating communications processing between the systems. Such additional processing and interfaces increase processing demands, which limits communication speed and increases the size of the chips and systems necessary to implement secure communications.

As a specific example, when using a separate security processor and I/O card connected to a backplane bus of a host, input encrypted data is typically transferred using direct memory access (DMA) from the I/O card, under control of the host, to memory coupled to the host. Then, the data is transferred by DMA from the memory via the host to the security processor. After the data is decrypted, and possibly a public key generated, the data is transferred by DMA from the security processor to memory again via the host. Finally, the decrypted data is transferred by DMA from the memory to the I/O card for output to another destination. This large number of data transfers creates a bottleneck on the backplane bus, which includes multiple data transactions, many interrupts, and heavy usage of memory to store the data.

The use of secure communications in broadband networks will increasingly require high-speed security and network processing. Further, the use of portable devices that securely connect to networks will require smaller chip and system sizes that can meet security and networking processing demands while at the same time retaining easy portability. In light of the foregoing, there is a general need for a secure I/O interface system and method that improve the security of communications to and from trusted hardware, improve communication speed, reduce the number of different systems required for secure communications, and reduce the extent of the bottleneck on the backplane bus.

BRIEF DESCRIPTION OF THE DRAWINGS

The invention is pointed out with particularity in the appended claims. However, for a more complete understanding of the present invention, reference is now made to the following figures, wherein like reference numbers refer to similar items throughout the figures:

FIG. **1** illustrates a simplified functional block diagram of a system architecture suitable for use in implementing embodiments of a security processing system and method in accordance with an embodiment of the present invention;

FIG. **2** illustrates a high-level simplified functional block diagram of a security processor in accordance with an embodiment of the present invention;

FIG. **3** illustrates a more-detailed functional block diagram of a network intrusion detection system used in a portion of the security processor of FIG. **2** in accordance with an embodiment of the present invention;

FIG. **4** illustrates a simplified flow diagram of packet flow in the security processor of FIG. **2**;

FIG. **5** illustrates a data representation convention used herein;

FIG. **6** is a block diagram illustrating the GDMA block, which incorporates an EDMA block, in accordance with an embodiment of the present invention;

FIG. **7** is a block diagram illustrating the EDMA block in accordance with an embodiment of the present invention;

FIG. **8** is a block diagram illustrating the ER block in accordance with an embodiment of the present invention;

FIG. **9** is a block diagram illustrating the OPC interfaces in accordance with an embodiment of the present invention;

FIG. **10** is an internal block diagram illustrating the OPC in accordance with an embodiment of the present invention;

FIG. **11** is a block diagram illustrating the relationship of the ER block to the cryptographic core and memory in accordance with an embodiment of the present invention; and

FIG. **12** is a block diagram illustrating the relationship between the ER block, the EDMA block, the cryptographic core, and memory in accordance with an embodiment of the present invention.

The exemplification set out herein illustrates an embodiment of the invention in one form, and such exemplification is not intended to be construed as limiting in any manner.

DETAILED DESCRIPTION OF THE DRAWINGS

The following description and the drawings illustrate specific embodiments of the invention sufficiently to enable those skilled in the art to practice it. Other embodiments may incorporate structural, logical, electrical, process and other changes. Examples merely typify possible variations. Individual components and functions are optional unless explicitly required, and the sequence of operations may vary. Portions and features of some embodiments may be included in or substituted for those of others. The scope of the invention encompasses the full ambit of the claims and all available equivalents.

The present invention is described and claimed herein primarily with reference to the processing of "packets". However, as used herein, it is intended that the term "packet" or "packets" have the meaning and scope of the more generic term "datagram" or "datagrams."

In one embodiment, the present invention provides, among other things, a system and method for connecting a trusted piece of hardware, such as, for example, a personal computer, server, router, personal digital assistant (PDA), cellular phone, network-enabled device or other computing or communication device, to a network using an I/O interface or system that provides improved security for all or substantially all communications received and sent by the trusted hardware. The secure I/O system preferably may perform all security and network processing necessary to maintain secure communications by the hardware with other devices on internal or external networks. Alternatively, it may perform the network security processing essential to be segregated from other processing to ensure safe (i.e., protected) and efficient system or device operation. For example, the secure I/O system permits establishing a VPN with a computer on an external network. The VPN may be established using, for example, the standard IPSec Internet protocol security, as described in "Request for Comment" (RFC) 2401, 2402 and 2406, which are incorporated herein by reference.

The secure I/O system of the present invention permits performing all or substantially all network processing functions and off-loads all or substantially all security functions associated with network address translation (NAT), the providing of a firewall, intrusion detection/protection system functionality, traffic proxying, and encryption from a host or network processor onto a single system or card, for example a NIC. This card may be inserted into each of the servers and other computers connected on an internal network.

The security processing performed by the secure I/O system typically may include encryption, decryption, signing and verification of packets at, for example, 100 megabits per second full duplex and greater speeds. For example, the secure I/O system of the present invention may provide wire speed performance, for example, of about 2-3 gigabits per second firewall and VPN throughput. The secure I/O system may simplify the deployment of security solutions on open platforms and appliances.

The elements that implement the various embodiments of the present invention are described below, in some cases at an architectural level. Many elements may be configured using well-known structures. The functionality and processes herein are described in such a manner to enable one of ordinary skill in the art to implement the functionality and processes within the architecture.

FIG. **1** illustrates a simplified functional block diagram of a system architecture suitable for use in implementing a security processing system and method in accordance with an embodiment of the present invention. Architecture **100** includes security processing system **102** comprising security processor **104**, which may consolidate the processing of discrete or consolidated security functions and maintain the relationships and integrity of the stored security context and other information in memories **106**, **108**, and **110**. Memories **106**, **108** and **110** are coupled to security processor **104**. Memories **106**, **108** and **110** store, for example, cryptographic keys and other data used in security functions by security processor **104**, and also store security associations and connection entries used in maintaining multiple security sessions with other computers. Memories **106**, **108** and **110** also may be used to buffer inbound or outbound data packets awaiting security processing by security processor **104**. Memory **108** may be used to support classification processing by security processor **104**.

Security processing system **102** is preferably contained within cryptographic boundary **112** and provides a secure I/O interface for computing or communications hardware as described above. Cryptographic boundary **112** preferably complies with Federal Information Processing Standards Publication (FIPS PUB) 140-2 titled "Security Requirements for Cryptographic Modules", issued May 25, 2001, by National Institute of Standards and Technology (NIST), which is incorporated by reference herein.

Security processing system **102** may be coupled to internal network **116** by I/O interface **114** and to external network **120** by I/O interface **118**. Interfaces **114** and **118** may perform physical (PHY) layer processing to convert a digital bit stream to or from an analog or photonic signal for transmission over a physical medium such as, for example, copper wire pairs, co-axial cable, fiber or air. Interfaces **114** and **118** are, for example, streaming data interfaces such as a Packet-Over-SONET Physical-Layer Three (POS/PHY3) type streaming interface, although 10/100 megabit (Mb) Ethernet, 1 Gigabit (Gb) Ethernet, UTOPIA, LX SPI-4 and other interface types may be suitable. By routing all or substantially all I/O to and from host processor **130** and/or internal network **116** through security processing system **102**, host processor **130** and internal network **116** are substantially protected against unauthorized access or other security breaches, protecting the security information integrity, and providing processing and storage efficiency from information consolidation.

IP data packets are received from and transmitted to external network **120** and internal network **116** over interfaces **114** and **118**. In other embodiments, security processing system **102** may include a number of additional interfaces to internal or external networks. Security processor **104** performs, for example, routing of data packets from external network **120** to appropriate destinations in internal network **116** and handles IPSec processing for both inbound and outbound data packets. Security processor **104** preferably handles all network and security processing functions for the data packets to provide the most secure I/O interface. However, in alternative embodiments, certain selected networking and/or security functions may be handled by other processors such as, for example, host processor **130**. Examples of network and security processing systems and methods, and related communications interfaces and protocols, suitable for implementation in and with security processing system **102** are described in U.S. patent application Ser. No. 09/880,701 (entitled "METHOD AND SYSTEM FOR HIGH-SPEED PROCESSING IPSEC SECURITY PROTOCOL PACKETS" filed by

Lee P. Noehring et al. on Jun. 13, 2001) and Ser. No. 10/160,330 (entitled "SYSTEM AND METHOD FOR MANAGING SECURITY PACKET PROCESSING" filed by Lee P. Noehring et al. on May 30, 2002), which applications are incorporated by reference herein.

Security processing system **102** may process packets delivered from internal or external networks **116** or **120** or from host processor **130**. System **102** may, for example, handle thousands of separate IPSec tunnels at various packet sizes from 64 bytes and higher at a throughput of, for example, about 300 Mb per second or greater. System **102** may handle transport or tunnel mode IPSec.

Other computing devices may be coupled to external network **120**. For example, user devices **122** and **124** may correspond to devices that may establish secure communication sessions with host processor **130** or another device on internal network **116**. User device **124** may be protected using a secure I/O interface **126**, which may be a hardware system similar to security processing system **102**. User device **122** may use only its host processor and software to process secure communications through external network **120**.

Security processor **104** may handle both so-called fast path and slow path processing functions. Fast path functions include time-sensitive processing such as, for example, packet classification, modification and forwarding, and slow path functions include, for example, system management and alarm functions and time-insensitive packet processing functions such as route calculation, unknown address resolution, firewall rule management, and routing table management. Packet classification generally involves matching information from an incoming packet to a table of connection entries (which may include state and context elements, and relations to encryption associations) stored in, for example, memory **106** or **108**.

Security processing system **102** may be implemented, for example, as a stand-alone system box or as a card such as, for example, a NIC, that connects to a slot in the motherboard of a host system. Security processing system **102** may be coupled to host processor **130** using host bridge or interface **128**. Host processor **130** may be coupled to hard drive **132**, digital content input device **134**, and authentication input device **136**. Hard drive **132** may store, for example, a software application that communicates with the application program interface (API) of security processing system **102**. Security processor **104** may send security-related information and data as requested to host processor **130**, and may switch its **110** ports as requested by host processor **130**.

Host bridge **128** may couple security processor to host processor **130** of, for example, a personal computer, server, or other computing or communications device. Host bridge **128** may be, for example, a peripheral component interconnect (PCI) interface, and in one embodiment, may be a 32 bit, 66 MHz PCI interface.

Authentication input device **136** may be, for example, a physical key or token, a smart card, or a biometric identification sensor. Authentication input device **136** may enable the authentication of a user attempting to access host processor **130**. Authentication input device **136** may be directly attached, for example, to a serial, network, or EEPROM interface of host processor **130** using a physically segregated or covered transmission channel. Authentication input device **136** may act as a mechanism for enabling or modifying the functions of security processor **104**, or as an information-loading mechanism, used for example in loading keys, uncovering keys, or modifying rules for device operation.

Digital content input device **134** may be, for example, a CD-ROM, portable storage device, or keyboard and provides digital data such as program code or security data to host processor **130**.

Security processor **104** may provide the first inspection of incoming data from external network **120** to determine, for example, if the data is encrypted or in plain text form, and the type of security processing required, as may be determined by reading the header or other content of incoming data packets, and to set up a secure channel or process to handle the data, as may be requested for a security policy.

Security processing system **102** may include a unique identification (ID) number stored on a chip containing security processor **104** or stored in encrypted form in, for example, memory **110**. Security processing system **102** may perform protected key generation in hardware, and protected keys are preferably never output from security processor **104** in plain text form.

Security processing system **102** may also serve as a trusted hardware device to authenticate another hardware security token connected on, for example, a common network. Security processing system **102** may be authenticated using authentication input device **136** and may provide the cryptographic processing for such authentication. Security processing system **102** may communicate verification or other information regarding the authentication status of input device **136** to host processor **130**.

By performing all or most security and networking processing for I/O communications to host processor **130** in security processing system **102**, a large proportion, for example, of greater than about 50-90 percent of VPN and firewall I/O data loops may be handled in security processing system **102** without intervention by host processor **130**. In addition, all or most security and network exception processing may be handled by security processing system **102**.

Security Processor

FIG. **2** illustrates a high-level simplified functional block diagram of security processor **104** in accordance with an embodiment of the present invention. In other embodiments of the present invention, other security processor configurations may be used in the system architecture of FIG. **1**. Security processor **104** is preferably, though not necessarily, formed on a single chip.

Streaming interface **200** may be coupled for input and output to physical **110** interfaces **114** and **118** and supports fast path data flow to security processor **104**. Host interface **206** may be coupled to physical host bridge **128** and supports slow path data flow and system management by host processor **130**. Host interface **206** may be coupled to DMA interface **204**. Both streaming interface **200** and DMA interface **204** may be coupled to switching system **208**. Although only a single streaming and DMA interface are illustrated, more than one interface of each type may be used. For example, in one embodiment, streaming interface **200** may comprise three 10/100 Ethernet interfaces, and DMA interface **204** may comprise two DMA interfaces. Switching system **208** may be used to provide a switching mechanism to route packets and data to and from any of the I/O interfaces of security processor **104** and local data bus **210**.

Local data bus **210** may be coupled to DMA interface **204** and operate under control of local bus controller **222**. Local memory interface **202** may be coupled to local data bus **210** and may couple security processor **104** to memories **106**, **108**, and **110**, which are typically provided on one or more separate chips although operating portions of memories **106**, **108**

and/or **110** may be provided on-chip with security processor **104**. In other embodiments, more than one local data bus **210** may be used.

Local memory interface **202**, and DMA interface **204** may be used, for example, by packet engines **228** to access memories **106** and **108** for classification processing and by control processor **212** for accessing firmware **214**. Memory **106** may be, for example, a DDR SDRAM, and memory **108** may be, for example, an SRAM. Memory **106** may be made available to control processor **212** for operating system and code storage (for example, for firewall and internet key exchange (IKE) functionality, routing and network address translation (NAT) information, and firewall table entries). Memory **106** may be made available to packet engine **228** for access to specific firewall information, and stored security policies and associations. Memory **106** may be made available to cryptographic core **232** to store security association and key information. Memory **106** may also be made accessible via host interface **206** to host processor **130**. Alternatively, a portion or all of the security association data may be stored in a memory, for example an SRAM (not shown), on-chip in security processor **104**.

Memory **108** may be made available to both control processor **212** and each packet engine **228**. Memory **108** may be used to aid in rapid lookups supporting packet engine **228** in classification and forwarding decisions. Memory **110** may be, for example, flash memory to provide non-volatile storage, for example, for boot memory and certain key storage. The boot code used to load firmware for execution by security processor **104** may optionally be authenticated using a mechanism internal to security processor **104** prior to its operation.

Switching system **208** may provide a flexible I/O system that allows packet processing engines or packet engines **228** to communicate high-speed data with several different types of interfaces including, for example, streaming interface **200** and direct memory access (DMA) interface **204**. A non-limiting example of a switching system and method that are suitable for use with the present invention is described in U.S. patent application Ser. No. 10/172,814 (entitled FLEXIBLE I/O INTERFACE AND METHOD FOR PROVIDING A COMMON INTERFACE TO A PROCESSING CORE, filed by Swaroop Adusumilli et al. on Jun. 12, 2002), which is hereby incorporated by reference. Alternatively, switching system **208** may be implemented using conventional switches. Switching system **208** may provide a common bus interface to packet engines **228**.

More specifically, switching system **208** may arbitrate between streaming and DMA interfaces to provide a common interface for packet engines **228** to permit communication of differing types of data over a plurality of bus types that implement different bus protocols and/or standards. The use of switching system **208** with DMA interface **204** may permit packets and other data to be routed using direct memory access among control processor **212**, each of packet engines **228**, and external memory such as memories **106** and **108**. In one embodiment, individual packets may be routed within security processing system **102** using DMA.

Switching system **208** may select the I/O port or interface, including host interface **206**, to use for data packets based on the results of cryptographic or other security or network processing. For example, packets classified for forwarding to another destination after a security operation (such as encryption or new connection validation) could be directed to the proper egress port, while packet data requiring host inspection (such as IKE messages, or exception or initial packets for firewall classification) could be redirected to DMA interface **204**. In contrast to prior systems that rely on external bus interfaces to re-direct packet traffic to varying packet processing devices, the present invention may permit simplifying or collapsing the schema and protocols used, for example, in firewall, routing, NAT and IPSec processing with the result that lookups, transforms, and other application activity are more efficient. Prior systems typically require context labeling or other data envelopment or tagging to manage packet workflow among varying processing devices.

Switching system **208** may also include the ability to perform packet spanning. Spanning generally refers to a capability in managing network data flow that duplicates a selected traffic flow through an additional port for analysis by a traffic analyzer or intrusion detection system. The term "spanning" includes within its meaning, but is not necessarily limited to, functionality associated with the use of switched port analysis (often designated by the acronym "SPAN"). Unlike the all-or-nothing port duplication capabilities of typical existing network switches having a SPAN capability, the spanning function of switching system **208** may selectively identify flows of traffic and then stream duplicate packets or other datagrams via DMA interface **204** to control processor **212** or to, for example, another integral MIPS or associated control processor (not shown) that may be included in security processor **104**.

Typical data traffic that will not be spanned (i.e., non-spanned traffic) flows from one of packet engines **228** to, for example, an output packet cache (OPC). The OPC is an intermediate buffer to switching system **208** for outgoing packet traffic that will leave security processor **104** through DMA interface **204** or streaming interface **200**. FIG. **9** is a block diagram illustrating the OPC interfaces.

At the OPC, this outgoing packet traffic may be placed on an active list (for example, a list of 64-byte memory structures residing in the OPC) for transmission out of interface **204** or **200** (for example, a PDMA or GMII interface). The OPC may be implemented, for example, as an embedded memory structure or in external memory and may be coupled between a packet engine **228** and one of the external interfaces of security processor **104**. The use of the spanning feature is preferably configurable and may be selected by the system or operator. This feature is preferably implemented primarily using the OPC. FIG. **10** is an internal block diagram illustrating the OPC.

More specifically, the OPC may include an output packet buffer (OPB) memory (e.g., a RAM) for buffering output data, and a buffer control block (BCB). The BCB is typically a set of pointers stored in memory that each refer to memory locations of the output data. The BCB may maintain metadata such as, for example, start-of-packet, end-of-packet, error, sequence number, pointer to next BCB in chain, and other metadata. The BCB is preferably used to manage the active lists and the free list for the linked-list allocation scheme. When logically dictated during the operation of security processor **104** such as, for example, in the case of a five-tuple match result from a lookup engine, a NIDS engine match to packet type, or particular TCP state, or some other pattern within a datagram that is of interest to the system operator, a control bit or flag (sometimes referred to as a "SPAN bit" herein) may be set or some other notification may be sent by packet engine **228** to notify the BCB for packet data that is transiting the OPB memory, including the output device or interface that will be used. When a packet that will not be spanned (i.e., a "non-span packet") is stored in the OPC, a "DONE" flag, for example, is set to zero for each such non-span packet, and each non-span packet may be queued for

egress out through an appropriate interface (i.e., streaming interface **200** or DMA interface **204**).

After the memory pointed to by the BCB is drained (i.e., data is read or outputted out of that location into another location), the BCB "DONE" flag may be set to allow the memory to be overwritten. Alternatively, another method may be used to move output buffer data from the "active list" to the "free list". When a spanned packet is sent to the OPC from packet engine **228**, a separate bit may be set (this separate bit is referred to herein as a "SPAN" bit). The SPAN bit may be used to initiate alteration of the behavior of the OPC. The packet may be streamed out through the original targeted egress interface (e.g., streaming interface **200** or data interface **204**), but before releasing the data memory area pointed to by the BCB, the data may be drained out via a designated interface, for example DMA interface **204** to control processor **212** or to host processor **130**. After such a packet is successfully duplicated using DMA interface **204**, the BCB may be set to free the memory to be overwritten as described above.

In an alternate embodiment, the BCB or some other memory control mechanism could maintain an active list and a free list and place the active data blocks of OPB memory (i.e., re-map the pointers) from the active list to the free list when the packet data is streamed out. When the SPAN bit is set, the data would first be streamed to the alternate interface (such as, for example, DMA interface **204**) in addition to its primary target output interface prior to moving the data blocks to the free list. After spanned data has been drained to control processor **212** or host processor **130**, the spanned data is available to other processors or systems for any desired subsequent actions such as, for example, logging, analysis for intrusion detection, or transcription.

The foregoing approach may be particularly useful for network intrusion detection functions. When one of the defined actions for a certain packet traffic type is to log the packet, the above approach permits security processor **104** to act substantially as an in-line tap, which permits selectively duplicating streams of data that may be of interest based on specific pre-selected criteria. When NIDS **302** returns a potential signature match to one of packet engines **228**, and that packet engine **228** is able to verify that the potential signature match is a true positive match, packet engine **228** may set the SPAN bit for that packet so that it is duplicated to control processor **212** and/or host processor **130** as discussed above. This verification may, for example, be based on the protocol of the packet or other appropriate criteria. Control processor **212** and/or host processor **130**, as is applicable, may then run further analysis on the packet or the packet stream, and/or may forward it to a centralized IDS collector for enterprise intrusion detection.

Alternatively, the packet or packet stream may be re-directed or duplicated to host processor **130** for further processing. Such processing may include, for example, upper-layer cross-packet analysis, packet normalization, data mangling, or other operations. The packet may be forwarded out through the appropriate interface (e.g., streaming interface **200** or DMA interface **204**) after such post-analysis or post-processing.

Packet engines **228** may each be coupled to a cryptographic core **232**. Packet engines **228** may each comprise microprocessors customized for packet operations such as, for example, packet processing and classification. Examples of packet engines suitable for use with the present invention are described in detail in U.S. patent application Ser. No. 09/880,701 (entitled "METHOD AND SYSTEM FOR HIGH-SPEED PROCESSING IPSEC SECURITY PROTOCOL PACKETS" filed by Lee P. Noehring et al. on Jun. 13, 2001), which is incorporated by reference herein. Each packet engine **228** may, for example, process packets needing initial NAT processing and firewall table entry setup, process packets corresponding to existing NAT and firewall tables, and process IPSec packets.

More specifically, each packet engine **228** may perform hash table lookups to a firewall connection table entry, which may contain state information, a rule to be applied to a packet, optional security association information, routing information (for example, for MAC overlay), and any application level gateway (ALG) packet mangling to be done.

For outbound IPSec traffic, each packet engine **228** may provide a pointer to security association data for an IP packet, load a security association database entry into a local buffer located on or off-chip, construct and add an outer IP header and IPSec header, perform lifetime checks, and update an associated security association database (SAD) entry (for example, the sequence number and byte count).

For inbound IPSec traffic, each packet engine **228** may locate an associated SAD entry by using a security policy index (SPI) number from the IPSec header or by an SAD address provided by the classification of the destination address, protocol and SPI. In order to use the SPI number, IKE firmware **214** may define the inbound SPI number from the API provided for security processor **104** during security association establishment. Packet engine **228** may then load the SAD entry into a local buffer, perform anti-replay checks and lifetime checks, and then update the SAD entry. Each cryptographic core **232** may remove tunnel IP headers, ESP or AH headers, and ESP trailers. The packet may then optionally be redirected through packet engine **228** for a firewall connection table lookup.

Packet engines **228** in FIG. **2** represent one or more packet engines that may be provided in parallel in security processor **104**. The optional presence of additional packet engines **228** is indicated in FIG. **2** by ellipsis **229**.

Input and output buffers **236** and **240** may be provided to couple each packet engine **228** to switching system **208**. Buffers **236** and **240** may be, for example, FIFO buffers. In one embodiment, each of output buffers **240** may read control data prepended to the data payload as an in-band instruction set that determines the distribution direction or interface of the packet by switching system **208**. Input and output buffers **236** and **240** may each have a size of, for example, 16-32 kilobytes (KB). An alternative is to have a direct control interface provided to couple each packet engine **228** to switching system **208**, for out-of-band signaling of the packet data distribution direction. Roughly stating the foregoing in another way, instructions may be sent either from a packet engine **228** to switching system **208** either in-band, as prepended control words, or out-of-band, via a discrete control channel.

Packet engines **228** may be interconnected at the packet level for passing a packet and associated context information to other functional blocks or to each other for specific processing. In parallel operation, the individual packet engines **228** may each independently process discrete packets and forward the packets to other devices, such as cryptographic processing cores or switches. Two or more microprocessors could, for example, be serialized to perform discrete functional tasks as the packet transits from one functional block to another. Packet engines **228**, in conjunction with cryptographic cores **232** and under the common control of control processor **212**, may perform, for example, firewall lookup and statistics, IPSec and secure sockets layer (SSL) processing, quality of service (QoS), traffic management, and public key

processing. Packet engines **228** may be programmable through registers (not shown), which may be configured by an external driver or initialization program. Each packet engine **228** may perform any needed datagram modification prior to sending a packet out from security processor **104**. For example, packet engine **228** may write a MAC destination address to a packet as it streams out of processor **104**.

In one embodiment, all incoming packets to security processor **104** may be initially processed by one of packet engines **228**. Each packet engine **228** may classify the packet based upon a lookup table result and then may apply a variety of operations including, for example, forwarding with necessary transform parameters to cryptographic core **232**, or forwarding to control processor **212** for application level processing. Such operations may further include overwriting portions of the packet with new data such as, for example, the media access control (MAC) header for forwarding and the IP header for NAT, and may also include dropping the packet, or passing the packet through security processor **104** to an egress interface, such as, for example, streaming interface **200**, unchanged.

Cryptographic cores **232** may provide security processing to perform, for example, IPSec and/or SSL processing. Each cryptographic core **232** may provide high-speed fixed function encryption and authentication hash processing for packet data. Each cryptographic core **232** may receive instructions and key address information affixed to a packet for applying appropriate transforms. Examples of cryptographic cores **232** suitable for use with the present invention are described in the following U.S. patent applications, all of which are incorporated herein by reference: Ser. No. 10/144,004 (entitled "SINGLE-PASS CRYPTOGRAPHIC PROCESSOR AND METHOD" filed by Satish N. Anand et al. on May 13, 2002); Ser. No. 10/144,332 (entitled "SECURITY ASSOCIATION DATA CACHE AND STRUCTURE" filed by Satish N. Anand et al. on May 13, 2002); Ser. No. 10/144,195 (entitled "APPARATUS AND METHOD FOR A HASH PROCESSING SYSTEM USING MULTIPLE HASH STORAGE AREAS" filed by Satish N. Anand on May 13, 2002); and Ser. No. 10/144,197 (entitled "APPARATUS AND METHOD FOR A HASH PROCESSING SYSTEM USING INTEGRATED MESSAGE DIGEST AND SECURE HASH ARCHITECTURES" filed by Satish N. Anand on May 13, 2002).

It should be noted that each cryptographic core **232** is preferably accessible only through a corresponding packet engine **228**. Alternatively, several packet engines **228** may access a single cryptographic core in a round robin or other arbitrated flow mechanism. Accordingly, all or substantially all packet and data flow may return to the corresponding packet engine **228** from cryptographic core **232** prior to output from security processor **104**. Also, in a preferred embodiment according to the present invention, all I/O data to security processor **104** transits one of cryptographic cores **232** whether or not the data needs encryption/decryption or other security processing. After exiting cryptographic core **232**, a packet may be assigned its distribution directions (for example, to a destination of one of several streaming interfaces **200** or control processor **212**) by packet engine **228** for distribution through switching system **208**.

Streaming interface **200**, switching system **208**, packet engines **228** and cryptographic cores **232** may provide fast path data flow for security processing system **102**. This fast path data flow may provide both firewall and virtual private network (VPN) functionality along with network intrusion detection functionality as described further below. Control processor **212** and firmware **214** may provide all or substantially all control for these firewall, VPN and network intrusion functions.

Initial packets for a data flow may transit from packet engine **228** and cryptographic core **232** to control processor **212** for an initial classification. Control processor **212** may perform firewall, NAT, and routing classification for the packet, and further may create a connection table and hash entry in memory **106** for use by packet engine **228** on subsequent packets in the data flow. This may include the building of more than one connection table entry, depending on the application. Examples of this include preemptively constructing inbound and outbound entries, as well as a data channel entry for certain protocols. Control processor **212** may also trigger IKE processing as a result of the classification of the initial packet.

The connection table entries above provide a mechanism that allows the acceleration of security operations, such as firewall or NAT decision processing for packets. Connection entries may have a relationship (for example, one-to-one or many-to-one) to IPSec SAD entries in support of IPSec operations as a result of classification.

Control processor **212** may provide control plane operations for security processing system **102** and may run an embedded operating system or simple task scheduler to handle complex packet applications such as, for example, firewall and intrusion detection system applications, a TCP/IP stack including routing functions, and support applications such as IKE and user interfaces for configuration, for example, from host processor **130**. The use of control processor **212** in the foregoing manner may permit the complete containment of all key generation, public key and symmetric key encryption and decryption processing within the hardware of security processing system **102** and within cryptographic boundary **112**. Control processor **212** allows the flexibility of general purpose processing for non-real-time, demand-driven or OS-based applications to be executed.

Modulo/expo engine **216** may be coupled to local data bus **210** to provide processing for streaming and modular exponentiation. Control processor **212** may provide public key macro acceleration by providing pre-processing for modulo/expo engine **216**, which would permit host processor **130** to request high-level public key acceleration calls that are handled completely by security processing system **102**. Modulo/expo engine **216** may be made accessible to control processor **212** and also host processor **130**. The interconnectivity of operations that may be provided by control processor **212**, specifically the providing of key management functions, modulo/expo engine operation and local access to encrypted/protected memory, allows security processor **104** to keep all unprotected cryptographic keys and operations within the boundary of security processor **104**. In other embodiments, a dedicated key management processor (not shown), which may be coupled to local data bus **210**, and associated firmware may be integrated and made accessible to modulo/expo engine **216** in addition to or even in the absence of control processor **212**.

Firmware **214** may be executed by control processor **212** and may provide operating system software and other software to provide IKE and other functions and additional functions known to one of skill in the art. Control processor **212** may be, for example, a general purpose processor such as a 32-bit RISC processor. Other types of processors may also be used. Other software stored as part of firmware **214** may be used to permit control processor **212** to provide VPN, firewall, intrusion detection/prevention, and SSL protocol communications, virus protection, digital rights management,

content filtering, access control, verifying of application integrity, and management of public key infrastructure (PKI) exchanges.

Additional software stored as part of firmware **214** may permit a wide variety of data analysis functions including, for example, packet analysis, pattern matching, or other data analysis. Statistics may be generated by such functions and/or other functions and the results communicated to host processor **130** or another device (not shown) for central data collection of activity on devices coupled to internal network **116**.

Firmware **214** may include control plane software that runs on control processor **212**. The control plane software may communicate with the data plane software using a set of application program interfaces (APIs) and a message-based protocol. The data plane software may include forwarding software responsible for performing high-speed packet processing that handles the data plane steady-state portion of networking applications, such as, for example, IP packet forwarding protocols. The functionalities provided by security processing system **102** may be changed and/or updated by updating firmware **214**. Such updating may be done, for example, as new industry or government security standards are developed or modified. Also, the resources devoted to each of the security and networking processing functions may be customized for each host computing device or by the location of a device on a network, for example a location at either a gateway or at an edge of the network.

Security processor **104** may include random number generator (RNG) **218** and timers, universal asynchronous receiver/transmitter (UART), and general purpose I/O **220** coupled to local data bus **210**. RNG **218** may be a true digital random-number generator. RNG **218** may be made available to control processor **212** and also to host processor **130**. Timers **220** may operate most operations in the core of security processor **104** and may run, for example, at a frequency of about 150 MHz. A separate reference clock (not shown) may be coupled to control processor **212**, which may be bridged to the security processor **104** core, and run, for example, at about 250 MHz.

Security processor **104** optionally may include anti-tamper system **224**. Anti-tamper system is controlled by control processor **212** and may include detection circuits for voltage, temperature and physical probing forms of tampering. More specifically, anti-tamper system **224** may comprise hardware tamper circuits and firmware routines to check the integrity or health of stored flash content. The firmware routines may check the general integrity or health of the flash content using, for example, both DES-MAC or AES-MAC security methods or other hashing and authentication techniques. Anti-tamper system **224** may be implemented as a network of detection circuits tied to a fail-safe fault collector (not shown).

Translator **226**, which may be, for example, a steganography translator or another memory obfuscation device or encryption translator, such as an encryption filter, may optionally be coupled to local memory interface **202** to use known steganographic or encryption techniques, as applicable to the type of device **226** used, in the writing and reading of security keys and other data to and from memories **106**, **108** and/or **110**. For example, an encryption key of, for example, about 112 bits may be distributed in an SRAM memory **108** in a data block size of, for example, about 100,000 bits and only be retrievable from memory **108** using a translation algorithm implemented in software in translator **226**.

Encrypted Memory System

A hardware encryption path may be included between local data bus **210** and a memory controller block in security processor **104**. This path may consist of two main components: (i) an encryption DMA block (EDMA) that may be a write-only path between a local host and off-chip memory (e.g., memory **106**) for securely storing SA (security association) keying material; and (ii) an "ER" block that may be a read path from the memory controller block to the block from which a calling function is originating (for example, a cryptographic function running in cryptographic core **232** that uses SA keys for IPSec processing). The hardware encryption path as described herein may in general be useful with any off-chip memory, including for example, memory **106**, **108**, or **110**. FIG. **12** is a block diagram illustrating the relationship in this embodiment between the ER block, the EDMA block, cryptographic core **232**, and memory. The division of memory access shown could be physical (block connection) or logical (access to targeted address ranges that are encrypted).

The EDMA block may consist of several blocks including an AES encryption block (e.g., 18-round AES with a 64-bit block size), an address expansion block, a control block, and a configuration block. The EDMA may sit between DMA interface **204** and an "AHB master block" (see FIGS. **6** and **7**), which is coupled to the memory controller block (as discussed in more detail below). As discussed in more detail below and as illustrated in the figures, the AHB may be an internal AMBA host for the chip. AMBA refers to the Advanced Microcontroller Bus Architecture.

The EDMA block monitors signals from, for example, DMA interface **204** to determine if the current write request from DMA interface **204** to the AHB master block is, for example, for an IPSec SA, and/or SSL SA, or for a transfer which does not contain any SA data. This distinction may be controlled by two control bits in a control word associated with DMA interface **204** and used for each transfer. If the transfer is for an IPSec SA, the EDMA logic may hold off the request going to the AHB master block until the AES block is ready e.g., when the initial 10 rounds of AES processing are complete). The AES block may use the SA source address and an internally generated key (K) to complete the initial 10 rounds. On completion of the 10 rounds, 64-bits, for example, of Cipher Text 0 (CT0) will be produced, and the write request will be allowed to pass to the AHB master block. The AHB master block will assert its read signal and the first 8 bytes of data (a Basic Command Word [BCW], which is control data not needing confidentiality protection) will be allowed to transfer as cleartext. On each of the remaining transfers, the AES block will step one round of the AES algorithm per each transfer, and the data will be XOR'ed with CT_n (n=0 . . . 8) to produce a value $EDMA_K$ [$Data_n$] (n=0 . . . 8) for a total transfer of 80-bytes, of which 72 bytes are encrypted. The EDMA preferably will not encrypt any transfer where the source address equals the destination address.

The ER block may provide a path from memory **106** (e.g., off-chip SA DDR) to cryptographic core **232** for decrypting SA's that are located within memory **106**. The ER block may consist of several blocks including an AES encryption block (e.g., 18-round, 64-bit AES), an address expansion block, a variable FIFO, a control block, and a configuration block. The ER block may be located between the calling functional block (e.g., cryptographic core **232** or another block) and memory **106**. The ER block may be read-only, or it may be read-write, if necessary to, for example, copy back state information. FIG. **11** is a block diagram illustrating the relationship in this embodiment of the ER block to the cryptographic core and memory.

The ER block may monitor the calling functional block's request signals to memory **106**. If the request is a read, the ER block will hold off the completion of the read by de-asserting

its ready signal ("ER_rdy") to a memory arbiter until the AES block is ready (i.e., when the initial 10 rounds of the AES algorithm are complete). The memory arbiter (e.g., a RAM arbiter) brokers access requests from the requestors of memory (e.g., a MIPS processor, one of packet engines **228**, or cryptographic core **232**). Signal ER_rdy may be transmitted to the memory controller (see the "CRA" block in FIG. **12**) from the EDMA or the ER control element.

The AES block may use the SA source address provided from the interface to cryptographic core **232** and the K key to complete the initial 10 rounds of the AES algorithm. On completion of the 10 rounds, 64-bits of Cipher Text 0 (CT0) will be produced and the ready signal (ER_rdy) may be asserted allowing the read request to pass to the memory arbiter. The memory arbiter will assert its data ready signal and the first 8-bytes of data (the BCW) will be allowed to transfer in the clear. On each of the remaining transfers, the AES block will step one round of the 64-bit AES algorithm per transfer, and the data will be XOR'ed with CT_n (n=0 . . . 8) to produce values $E1_K[Data_n]$ (n=0 . . . 8) for a total transfer of 80 bytes, of which 72 bytes are decrypted. More generally, the ER block may decrypt or encrypt to arbitrary offsets per each read or write request, intermingling data stored in the clear with data stored in an encrypted form so as to make a clear text delivery to the calling functional block.

Now discussing an encrypted hardware path according to the present invention in more detail, an encrypted memory system may be implemented as a multi-block system tasked with the selective encryption of memory structures to protect data that may reside in off-chip memory (e.g., memory **106**, **108**, or **110**, as mentioned above) from use by anything other than the intended block and/or logic that resides in the system itself. It is particularly useful in encryption devices and applications such as with the IP Security protocol where one wishes to achieve FIPS 140-2 level 2 or similar levels of protection for data and process contents.

The specific embodiment of the present invention discussed here preferably has two primary blocks. First, the EDMA block may provide logic and a protected path from, for example, a host general purpose DMA interface to the memory controller. This is the path over which the encrypted data may be written to memory. The utility of the EDMA block is to provide a method of inserting data into memory, encrypting it en route. Second, the ER block may provide a fast decryption path for data read from external memory. The ER block is accessible only to trusted requestor blocks within the chip, making retrieval and decryption of certain protected memory data discriminatory, based on purposeful hardware design. An encryption key K may be used for encryption and decryption of the externally stored data. K is preferably internally generated at initialization and not visible nor accessible outside the system.

Data Representation Conventions

FIG. **5** illustrates the data representation convention used herein for purposes of explanation. Other conventions may be used in different embodiments. Throughout the description herein, all data vectors and one-dimensional data structures are represented with the Most Significant Bit (MSb) in the leftmost position and the Least Significant Bit (LSb) in the rightmost position. All two-dimensional data structures are represented with the MSb in the upper leftmost position and the LSb in the lower rightmost position.

EDMA Block (GDMA to Off-Chip Memory)

The EDMA block may provide a write-only path between a local host or other data generating device and the off-chip memory for securely storing protected information, such as SA keying material. It may consist of several blocks that include an N round B block AES encrypt (where B is the width of the memory interface), address expansion, control, and configuration. An AES algorithm of 128-bit key size is typically used though other key sizes may be used with the appropriate adjustment in key expansion rounds. Likewise, some other streaming or block cipher may be used in an alternate implementation. The EDMA block sits between the interface from the data path and the bus to the memory controller. In one implementation the EDMA may be located between the "GDMA" block and the "AHB" block (see FIGS. **6-8**). The GDMA (general purpose DMA) block may interface the internal or external host to the AHB. The AHB master is the mechanism for the functional block (e.g., the GDMA block or packet DMA [PDMA]) to take control of the bus for signalling and data transmission. Alternatively, in a multi-path (parallelizing) design, the EDMA block could be located between the GDMA Slice0 (gda_sclice0) and the GDMA multiplexer (mux) as illustrated in FIG. **6**.

The EDMA block monitors the incoming data bus (e.g., GDMA signals) to determine if the current write request is protected data or a transfer which does not contain any protected data. This distinction may be controlled by signaling, for example, two control bits in a GDMA control word for each transfer. The signaling may also determine whether or not there is an offset to the beginning of encryption, allowing a block-sized multiple of clear text to precede the encrypted data in a single transaction. If the transfer is to be encrypted, for instance for an IPSec SA, the EDMA logic will hold off the request going to the AHB Master until the AES is ready, that is when the initial 10 rounds of AES are complete, and the block multiple clear text offset is reached, if it exists. The AES block will use the incoming data's Source Address (M) and K key to complete the initial 10 rounds. On completion of the 10 rounds, B bits of Cipher Text 0 (CT0) will be produced and the write request will be allowed to pass to the AHB Master. The AHB Master (in this example) will assert its read signal and the first 8-bytes of data will be allowed to transfer. On each of the remaining transfers the AES block will step one round of the AES algorithm per transfer and the data will be XOR'ed with CTn (n=0 . . . i) to produce E_K[Datan] for a total transfer of n×8 bytes being encrypted. The EDMA block will not encrypt any transfer where the source address equals the destination address. A more detailed block diagram is illustrated in FIG. **7**. The sections below describe each of these blocks in more detail.

RND_{mix}

The RND_{mix} value will be initialized during the boot-up sequence as a 64-bit (or block size) random or pseudo-random number and then written to the EDMA RND_{mix} register. The RND_{mix} will be XOR'd with the cipher text XOR data and then be sent to the EDMA mux, providing additional mix protection to mitigate the weakness of "to 000 or FFF" writes to memory.

AES64 Encryption Block

The AES block preferably uses a reduced block size, 64-bit block AES (128-bit key) algorithm as defined in the Appendix to this application (AES64 Specification). Although the embodiment of the present invention is discussed in the context of this specific AES algorithm, one of skill in the art will recognize that other algorithms (e.g., other than AES) may be used in other embodiments. Although in the Appendix the number of rounds for the AES algorithm is defined as 10, for the EDMA or ER blocks the AES64 may be extended to support an 10+n round cipher, as determined by the size of the encrypted data transaction. For more detail, see the following table:

PreAdd	
round 1	SubBytes
round 1	ShiftRows
round 1	MixColumn
round 1	AddKey
. . .	
round n	SubBytes
round n	ShiftRows
round n	(No MixColumn On Last Round)
round n	AddKey

The output of rounds 11 through n will produce CT_0 through CT_n which will be used to XOR with the eight byte blocks (for a 64-bit memory width) of the data transaction being written to off-chip memory. An initial, block multiple amount of data may be allowed to pass in the clear prior to the active encryption, based on any offset programmed into the transaction signaling.

EDMA Address Expansion Block

The address expansion block takes n_m-bits of address data together with some amount of K data and produces block-sized bits of address expansion data for input to the AES block. The address expansion block may use S-Box and E-Box functions to accomplish the expansion, though other substitution or expansion algorithms may be used as long as they introduce sufficient variability. The address is typically expanded through the E-Box or some other expansion function. Some mixing bits are selected from K and run through a number of S-Box's or some other substitution function to produce data that will be XOR'd with the expanded address seed from the E-Box. The output from the XOR is then appended to the address (or data that is address dependant) to form a block-sized amount of output (ax_data[B:0]). In more detail, in formula form: ax_data[B:0]={gdma_EDMA_amemory[m_i:0]}

ER Block (Cryptographic Core to/from Security Association (SA) Memory)

The ER block (e.g., for a four-channel slice) provides a read-only (e.g., IPSec) path from off-chip memory to the functional block or device reading the memory, for example, in the case where cryptographic core **232** would need to decrypt SA's that are located within off-chip memory. It may consist of several blocks that include an n-round, B-bit AES encrypt, address expansion, variable FIFO, control, and configuration. The ER block may be located between the memory-consuming function (e.g., cryptographic core **232**) and off-chip memory as illustrated in more detail in FIG. **8**. Multiple function blocks or devices may have their own or a shared ER block to memory.

The ER block monitors the calling block's request signals to the off-chip memory. If the request is a read, the ER block will hold off the completion of the read by de-asserting its ready signal (ER_rdy) to a memory arbiter until the AES block is ready (i.e., when the initial 10 rounds of AES64 are complete). The AES block will use the memory Source Address provided from the cryptographic core interface and the K key to complete the initial 10 rounds of AES64. On completion of the 10 rounds, 64 bits of Cipher Text 0 (CT0) will be produced and the ready signal (ER_rdy) will be asserted allowing the read request to pass to the memory arbiter. The memory Arbiter will assert its data ready signal and the data will be allowed to transfer. If an offset is included in the request signal, then a block multiple of data may precede the decrypted information in the clear. On each of the remaining transfers the AES block will step one round of the AES algorithm per transfer and the data will be XOR'ed with CTn (n=0 . . . 8) to produce $E1_K$[Datan] for a total transfer of 8×n bytes being decrypted.

Host Configuration Interface (I/F)

A host configuration interface provides read/write access to local configuration and status registers.

RND_{mix}

The RND_{mix} value will be initialized during the boot-up sequence as a 64-bit (or block size) random or pseudo-random number and then be written to the EDMA RND_{mix} register. The RND_{mix} will be XOR'd with the cipher text XOR data and then be sent to the EDMA mux, providing additional mix protection to mitigate the weakness of "to 000 or FFF" writes to memory.

AES Encryption Block

The AES block preferably uses a reduced-block size, 64-bit AES algorithm as defined in the Appendix to this application (AES Specification). Although the discussion in the Appendix defines the number of rounds as 10, for the ER block the AES block is able to support a 10+n round cipher, where n represents the number of bus width blocks of memory to be retrieved.

ER Address Expansion Block

The ER address expansion block may be implemented in the same way as the EDMA address expansion block.

Network Intrusion Detection System

FIG. **3** illustrates a more-detailed functional block diagram of a network intrusion detection system that may be used in a portion of security processor **104** in accordance with an embodiment of the present invention. FIG. **3** illustrates, for example, three packet engines **228** in parallel and each connected to a cryptographic core **232**.

Network intrusion detection system (NIDS) **302** has taps **303** that may couple to the input/output of each of packet engine **228** and cryptographic core **232** pair. Signature database **304** is a defined set of patterns stored in on and/or off-chip memory. NIDS **302** attempts to match parts of the data stream (for example, the header, payload, or trailer) against the stored set of patterns.

According to the present invention, by passing all I/O traffic to host processor **130** and/or internal network **116** through security processing system **102**, and including NIDS **302** within system **102**, undesirable intrusions may be detected in-line with such I/O traffic, such as, for example, it passes through an NIC. By being in-line in this manner, intrusions identified by NIDS **302** may be stopped in the I/O traffic flow and any further related improper intrusion prevented from passing to host processor **130** and/or internal network **116**.

Each computer or computing device (not shown) connected, for example, to internal network **116** may be protected by security processing system **102**, such as, for example, using an NIC containing security processing system **102** for all I/O traffic for each device. Each such distributed NIC may communicate with a central server (not shown) connected to internal network **116** to accumulate performance, security, network processing and other data related to activities reported by each such security processing system **102**. Additionally, such accumulated data may be processed and/or analyzed by the central server and then new or modified control signals sent to all, or a selected portion, of the security processing systems **102** of each device on internal network **116**.

Having a tap on each of the input and output paths to each cryptographic core **232** permits the capture of clear text packets either before or after encryption, depending on whether the packets are inbound or outbound. Thus, signature match-

ing may be done on clear text data. NIDS **302** may flag a packet as having a potential signature match to a pattern in signature database **304**. The flagged packet may either be dropped (and the flow of subsequent packets in the same data flow stopped) or continue to its next destination, with a logging report to host processor **130** in either case indicating the status of the packet. Also, in addition to being sent to its next destination, the flagged packet may be redirected or duplicated and receive further slow path processing by control processor **212**. The logging report may be used to form an audit trail for collective or heuristic analysis and future packet inspection by a centralized intrusion detection system or other process or device. If a packet has been identified as undesirable, intrusion prevention may be provided by dropping related future packets in packet engines **228**.

NIDS **302** may be coupled to a separate control channel **305** coupled back to one or more, and preferably all, of packet engines **228**. Control channel **305** is a special path to send packets that have been flagged by NIDS **302** to the control plane on local data bus **210** (and then optionally on to host processor **130**) for logging or other administrative tasks, including, for example, providing data for use by a network administrator in managing and improving network intrusion detection and prevention by security processing system **102**.

Flagging of a packet or a packet data structure may be done by setting a bit flag in a control word corresponding to the packet. By examining this bit flag for a packet, control processor **212** may direct the packet to a certain location for logging. Results from packet classification performed by each packet engine **228** (for example, to determine that the packet is network file system (NFS) traffic) may be used to select from one of many rules sets or signature sets in signature database **304**.

Based on comparisons to the selected rules or signature sets, control channel **305** may indicate one or more types of initial potential intrusion violations associated with a packet. After indicating flagged packets to one or more of packet engines **228** through control channel **305**, each packet engine **228** may further classify the packet by comparison to the one or more types of other potential intrusion violations provided for the packet by control channel **305**, and use information from prior classification processing for the packet by the packet engine **228** to narrow or eliminate the set of potential intrusion violations.

Packet/Data Flow

FIG. **4** illustrates a simplified flow diagram of typical packet or data flow for one embodiment of security processing system **102**. Each packet engine **228** may comprise a packet processor and a classification engine. Circles **404** and **406** generally correspond to the functionality provided by the classification engine and the packet processor, and such functionality is referred to herein as classification engine **404** and packet processor **406**.

Classification engine **404** may provide lookup and decision logic for, among other things, security policy database (SPD) lookup, firewall connection table lookup, NAT table lookup, routing, and limited application level gateway (ALG) rule application and data mangling. Any or all of the foregoing classification engine functions may be subsumed in a single connection table entry. Once an initial data flow is defined, the foregoing classification engine functions may be made integral to the data flow.

Packet flow through security processing system **102** typically begins when a packet enters switching system **208** via one of streaming interfaces **200** or DMA interfaces **204**. Each packet may be inserted into an active list waiting for the next available packet engine **228**. The same active list may be an insertion path for control processor **212** to direct packet traffic into a packet engine **228**. Regardless of destination, whether, for example, it is to streaming interface **200**, host interface **206**, control processor **212**, or a loop through a packet engine **228**, all packet data preferably flows to a packet engine **228** and then to a corresponding cryptographic core **232**. Tagging of the packet upon ingress to the packet engine **228** may determine the egress path from cryptographic core **232**. More specifically, the incoming and outgoing packets may be provided with a tag upon ingress to one of packet engines **228** and the tag may be used to determine the egress path upon exit from the corresponding cryptographic core **232**.

Classification hash lookup data and a detailed connection flow table and security policy/association data may be stored, for example, in memory **106**. Upon receiving a packet, packet engine **228** may find a match in the connection table, fetch the connection information (including SAD information as appropriate), and apply the appropriate rules and transforms. This may include forwarding the packet to control processor **212**. If no match is found in the connection table, then the packet is preferably forwarded to control processor **212**.

Outbound packets may be buffered after transit through packet engine **228** and cryptographic core **232** for sending out to streaming interface **200** or to host interface **206**. Outbound packets may have made a single trip through packet engine **228** and core **232**, may have made a second trip through packet engine **228** and core **232** after prior processing by control processor **212**, or may have made a second trip through packet engine **228** for firewall inspection following decryption in cryptographic core **232**.

Initial packets needing classification to create a NAT lookup table entry and/or firewall connection table entry may be forwarded to control processor **212** for processing, then back to classification engine **404**, and then to packet processor **406** prior to output from security processor **104** (unless dropped in accordance with the firewall rules in effect). If such initial packets also need IPSec processing, they may be forwarded to packet engine **228** after initial processing by control processor **212**, then back to an egress interface.

For packets that are already in an existing data flow, for example, already having connection table entries or NAT global mapping in existence, a successful lookup may result in a direct forwarding to packet processor **406** for modification, and then classification by classification engine **404** for egress from security processor **104**. Outbound IPSec packets in an existing flow transit to packet engine **228** and cryptographic core **232** after egress classification and firewall packet processing. Inbound IPSec packets in an existing flow are forwarded to packet engine **228** and cryptographic core **232**, then to the classification engine **404** and packet processor **406** for SPD validation, routing, and optionally, firewall and NAT processing prior to egress.

What is claimed is:

1. A security processor to process incoming packets and outgoing packets, the security processor comprising:

a switching system to send the outgoing packets and receive the incoming packets;

a packet engine, coupled to the switching system, to handle classification processing for the incoming packets received by the packet engine from the switching system and the outgoing packets sent by the packet engine to the switching system, wherein the packet engine is one of a plurality of packet engines and substantially all of the incoming and outgoing packets to the security processor transit one of the plurality of packet engines;

a cryptographic core, coupled to the packet engine and receiving the incoming packets from the switching sys-

tem via the packet engine and communicating the outgoing packets to the switching system via the packet engine, to provide encryption and decryption processing for packets received from and sent to the packet engine, wherein the packet engine is interposed between the switching system and the cryptographic core;

a signature database; and

an intrusion detection system coupled between the cryptographic core and the packet engine and responsive to at least one packet matching a signature stored in the signature database.

2. The security processor of claim **1** wherein the packet engine is further operable to handle security context management processing for the incoming and outgoing packets.

3. The security processor of claim **1** further comprising:

a local data bus coupled to the switching system; and

a modulo engine coupled to the local data bus.

4. The security processor of claim **3** wherein the packet engine, the cryptographic core, and the modulo engine are formed on a single chip.

5. The security processor of claim **4** further comprising a control processor, coupled to the local data bus, for exception handling of the incoming and outgoing packets.

6. The security processor of claim **4** further comprising a key management engine coupled to the local data bus.

7. The security processor of claim **4** wherein the security processor handles substantially all security processing for the incoming and outgoing packets.

8. The security processor of claim **7** wherein the security processor further handles substantially all network processing for the incoming and outgoing packets.

9. The security processor of claim **1** wherein the cryptographic core is one of a plurality of cryptographic cores coupled one-to-one to the plurality of packet engines and substantially all of the incoming and outgoing packets to the security processor transit a corresponding one of the plurality of cryptographic cores after transiting one of the plurality of packet engines.

10. The security processor of claim **1** wherein the packet engine is further operable to add at least one of an IP header or a MAC address to the outgoing packets.

11. The security processor of claim **1** wherein the packet engine is further operable to remove an IP header from the incoming packets.

12. The security processor of claim **1**, wherein the at least one packet matching the signature stored in the signature database comprises a plain text packet.

13. A security processing system comprising:

(a) a security processor comprising:

a switching system to send outgoing packets and to receive incoming packets;

a packet engine, coupled to the switching system, to handle classification processing for the incoming packets received by the packet engine from the switching system and the outgoing packets sent by the packet engine to the switching system, wherein the packet engine is one of a plurality of packet engines and substantially all of the incoming and outgoing packets to the security processor transit one of the plurality of packet engines;

a cryptographic core, coupled to the packet engine and receiving the incoming packets from the switching system via the packet engine and communicating the outgoing packets to the switching system via the packet engine, to provide encryption and decryption processing for packets received from and sent to the packet engine, wherein the packet engine is interposed between the switching system and the cryptographic core;

a signature database; and

an intrusion detection system coupled between the cryptographic core and the packet engine and responsive to at least one packet matching a signature stored in the signature database; and

a local data bus coupled to the switching system; and

(b) a memory coupled to the local data bus.

14. The security processing system of claim **13** further comprising a modulo engine coupled to the local data bus.

15. The security processing system of claim **14** further comprising a key management engine coupled to the local data bus.

16. The security processing system of claim **13** wherein the memory and the security processor are within the same cryptographic boundary.

17. The security processing system of claim **13** wherein the security processor is formed on a single chip.

18. The security processing system of claim **13** further comprising:

a memory interface coupled to the local data bus, wherein the memory is coupled to the local data bus using the memory interface; and

a translator coupled to the memory interface to perform translation of data received by the memory interface from the memory.

19. The security processing system of claim **18** wherein the translator performs steganographic translation of the received data.

20. The security processing system of claim **18** wherein the translator performs encryption translation of the received data.

21. The security processing system of claim **13** wherein the security processor is operable to (i) execute boot code to load firmware for execution by the security processor and

(ii) authenticate the boot code using a mechanism internal to the security processor prior to operation of the security processor.

22. The security processing system of claim **13**, wherein the at least one packet matching the signature stored in the signature database comprises a plain text packet.

23. A security processor to connect a trusted network to an un-trusted network for data packet communication, the security processor comprising:

a first interface to couple to the trusted network and to the un-trusted network;

a second interface to couple to a host processor;

a switching system operable to selectively couple to the first interface or the second interface;

a local data bus, coupled to the switching system;

a plurality of packet engines coupled to the switching system to handle classification processing for incoming packets received by the plurality of packet engines from the switching system and outgoing packets sent by the plurality of packet engines to the switching system;

a plurality of cryptographic cores each coupled to one of the plurality of packet engines to communicate with the switching system via the plurality of packet engines and to provide encryption and decryption processing for packets received from and sent to the plurality of packet engines, wherein the plurality of packet engines are interposed between the switching system and the plurality of cryptographic cores;

a signature database;

an intrusion detection system coupled between the plurality of cryptographic cores and the plurality of packets engine and responsive to at least one packet matching a signature stored in the signature database and

a control processor, coupled to the local data bus, to control data packet flow within the security processor.

24. The security processor of claim **23** wherein the security processor is operable to act as a firewall to deny or accept a data packet and to implement a secure communication channel with another computing device in the untrusted network.

25. The security processor of claim **24** wherein the security processor implements data packet security and authentication functions to support the secure communication channel.

26. The security processor of claim **23**, wherein the at least one packet matching the signature stored in the signature database comprises a plain text packet.

* * * * *