**IN THE UNITED STATES DISTRICT COURT**
**FOR THE NORTHERN DISTRICT OF TEXAS**
**DALLAS DIVISION**

| | |
|---|---|
| **DDC TECHNOLOGY, LLC,**<br><br>**Plaintiff,**<br><br>**v.**<br><br>**GOOGLE LLC and ORORA PACKAGING SOLUTIONS,**<br><br>**Defendants.** | **Case No.: 3:22-cv-01263-B-BT**<br><br>**JURY TRIAL DEMANDED** |

**FIRST AMENDED COMPLAINT FOR PATENT INFRINGEMENT**

Plaintiff DDC Technology, LLC complains of Defendants Google LLC (fka Google Inc.) and Orora Packaging Solutions (fka Orora North America, dba Landsberg Orora, dba Orora):

**NATURE OF LAWSUIT**

1. This is a claim for patent infringement arising under the patent laws of the United States, Title 35 of the United States Code.

**THE PARTIES**

2. DDC Technology, LLC ("DDC" or "Plaintiff") is a limited liability company formed and existing under the laws of the State of Delaware with a principal place of business in Austin, Texas.

3. DDC is the named assignee of, owns all right, title and interest in, and has standing to sue for infringement of United States Patent No. 9,420,075, entitled "Virtual Reality Viewer and Input Mechanism," which issued on August 16, 2016 ("the '075 Patent") (a true and correct copy is attached as Exhibit A); United States Patent No. 9,811,184, entitled "Virtual Reality Viewer and Input Mechanism," which issued on November 7, 2017 ("the '184 Patent") (a true and correct copy is attached as Exhibit B); United States Patent No. 10,528,199, entitled "Virtual

Reality Viewer and Input Mechanism," which issued on January 7, 2020 ("the '199 Patent") (a true and correct copy is attached as Exhibit C); United States Patent No. 11,093,000, entitled "Virtual Reality Viewer and Input Mechanism," which issued on August 17, 2021 ("the '000 Patent") (a true and correct copy is attached as Exhibit D); and United States Patent No. 11,093,001, entitled "Virtual Reality Viewer and Input Mechanism," which issued on August 17, 2021 ("the '001 Patent") (a true and correct copy is attached as Exhibit E) (collectively, the "Asserted Patents").

4. The Asserted Patents were invented by Patrick Buckley. Mr. Buckley co-founded DODOcase, Inc. ("DODOcase") in the basement of Mr. Buckley's home with the mission of making mobile device accessories that were built by local craftsman. Mr. Buckley assigned the Asserted Patents to DODOcase.

5. In 2014, DODOcase anticipated a growing mobile device accessories market, particularly for affordable virtual reality accessories that worked with smartphones. Mr. Buckley, an MIT trained mechanical engineer and inventor of multiple patents, recognized breakthrough improvements that could be made to then-existing smartphone virtual reality accessories and filed for patent protection for an innovative way to make a low-cost virtual reality input system for touchscreen devices.

6. For seven years, DODOcase manufactured and sold mobile device accessories, most of which were built and/or assembled in a factory DODOcase built in San Francisco. DODOcase launched four virtual reality smartphone accessories in 2014 and sold over one-million smartphone virtual reality viewers (and millions of other products), becoming recognized globally as a premium brand for mobile accessories.

7. In 2016, DODOcase was forced to abandon the sale and production of products that used its own patented technology because of severe price pressures resulting from infringers importing competitive products.

8. Due to mounting costs and expenses resulting from extensive litigation in Federal District Court, the Federal Circuit Court of Appeals, and the Patent Trial and Appeal Board, on or about October 16, 2018, the Asserted Patents were assigned to DDC by DODOcase. As part of that assignment, DODOcase retained a financial interest related to recoveries from enforcement of the Asserted Patents.

9. Former defendant Emerge Technologies, Inc. (dba Utopia 360) ("Emerge") is a Texas corporation with a registered business address at 955 Freeport Parkway, Suite 100, Coppell, Texas 75019. Emerge was dismissed from this action with prejudice on October 24, 2022.[1] (ECF 82).

10. Former defendant Structural Graphics, LLC (dba Red Paper Plane) ("Structural Graphics") maintains a sales office located in Dallas, Texas. Structural Graphics was dismissed from this action with prejudice on January 9, 2023. (ECF 111).

11. Former defendant Pyrite Vr Ltd (dba Maxbox VR) ("Pyrite") is a United Kingdom private limited company located in England. Pyrite was dismissed from this action on December 21, 2022, pursuant to a Stipulated Final Consent Judgment And Permanent Injunction. (ECF 105 and 107).

[1] While former defendants Emerge, Structural Graphics, Pyrite, and Homido were dismissed from this action, DDC continues to assert claims for induced infringement against Google with respect to the Accused Products of each of these former defendants.

12. Former defendant HMD TECH SARL (dba Homido) ("Homido") is a French limited liability company located in France. Homido was dismissed from this action with prejudice on October 6, 2022. (ECF 73).

13. Based upon public information, Orora Packaging Solutions (fka Orora North America, dba Landsberg Orora, dba Orora) ("OPS") is a California corporation with at least eleven physical places of business in the State of Texas and at least five physical places of business in this Judicial District. (See Exhibit F, downloaded from https://www.ororagroup.com/system/downloads/files/000/000/638/original/north-american-contact-details.pdf and Exhibit G, captures from https://ororapackagingsolutions.com/locations/).

a. 1 Pollock Place, Grand Prairie, TX 75050 (N.D.Tex.);

b. 3210 Innovative Way, Mesquite, TX 75149 (N.D.Tex.);

c. 510 N. Peachtree Road, Suite 200, Mesquite, TX 75149 (N.D.Tex.);

d. 4554 Barnett Road, Wichita Falls, TX 76310 (N.D.Tex.);

e. 4151 Highway 121 N, Grapevine, TX 76051 (N.D.Tex.);

f. 11333 Rojas Drive, Suite C, El Paso, TX 79936;

g. 14611 Tomball Parkway, Houston, TX 77086;

h. 10000 W. Sam Houston Parkway N, Houston, TX 77064;

i. 3802 Binz-Engleman Road, San Antonio, TX 78219;

j. 119 W. Lachapelle, San Antonio, TX 78204; and

k. 8800 Shoal Creek Blvd, Ste A, Austin, TX 78757.

14. OPS also employs dozens of persons in the Northern District of Texas including: machine operators, sales executives/representatives, warehouse team members/associates, fulfillment coordinators, IT systems engineers, sourcing specialists, managers, general legal

counsel, Directors (*e.g.*, human resources, merchandising, and procurement/distribution), and Vice Presidents (including Jones who appears to work for OPS out of the Grapevine facility). See Exhibit H. Specifically, Matthew Jones is an officer of OPS – Vice President Finance – and, upon information and belief, works in the OPS facility located at 4151 Highway 121 N, Grapevine, Texas 76051 (and/or works out of a home office located in Lantana, Texas).

15. OPS was formerly known as Orora North America before changing its name in 2016. Upon information and belief, OPS is a subsidiary of Orora Limited (an Australian entity), and the parent company of several entities in North America that operate within the "Landsberg/Orora" family. Specifically, upon information and belief, OPS is the parent of former defendant Landsberg Orora, and Dallas-based Orora Packaging Texas, LP; OPS also comprises numerous subdivisions or subsidiaries including, but not limited to: Orora DGP, Orora Texas LLC, Orora Visual LLC, Orora Visual TX LLC, Manufactured Packaging Products (aka MPP), Pollock Orora, Orora Visual (Dallas), and Bronco Orora. (See Exhibit F, Exhibit G, and Exhibit I).

16. Google LLC ("Google") is a Delaware limited liability company with at least one physical place of business in this Judicial District located at 15303 Dallas Parkway, Addison, Texas 75001. Google previously operated under the name Google, Inc.

17. Google and OPS are herein referred to collectively as "Defendants".

18. Former defendants Emerge, Structural Graphics, Pyrite, and Homido made, had made, imported, used, offered to sell, or sold virtual reality viewers that directly infringed claims of each of the Asserted Patents: Emerge's Utopia 360° VR Headset; Structural Graphics SleekPeeks Cardboard VR Viewer; Pyrite's Standard Branded Google Cardboard (Inspired) V2, Deluxe Custom VR Google Cardboard (Inspired) V2, and Adjustable Lenses Google Cardboard

Inspired virtual reality viewers; and Homido's Grab, V2 and Prime virtual reality viewers, (collectively, the "Former Defendant Accused Products").

19. Defendant Google made and/or had made, imported, used, offered to sell and/or sold, and used Google Accused Products, as further identified below, which activities are accused of directly infringing claims of each of the Asserted Patents. Specifically, the manufacture, import, use, offer of sale, and sale of Google Cardboard (I/O 2015 Edition) Version 2 Virtual Reality Viewer ("GC V2 Viewer") directly infringes claims of each of the Asserted Patents. Google further directly infringed, and continues to infringe, the Asserted Patents by offering for sale virtual reality viewers substantially similar or identical to the GC V2 Viewer on its website. (See https://arvr.google.com/cardboard/get-cardboard/; previously available at https://vr.google.com/cardboard/get-cardboard/). (See Exhibit J). Specifically, Google offered pricing and links to purchase Accused Products from companies including: Defendant OPS (through a link to the Landsberg Orora website); former defendants Pyrite, Structural Graphics, and Homido; and several other entities including, but not limited to: Insignia (a Best Buy Brand), Case-Mate, Goonex/QR, Hoonite Ltd, I AM CARDBOARD, Irusu, Knoxlabs, Unofficial Cardboard, Vusion, Wow Stuff!, Yoheha Innovation, Ltd., Zaak, Mattel, Powis, and Handstands. In addition to its direct infringement, Google induced and continues to induce others to infringe claims of each of the Asserted Patents as set forth in detail below. Specifically, Google induced the direct infringement by the Former Defendant Accused Products as set forth in the original Complaint, induced and continues to induce the direct infringement by the OPS Accused Products (referred to as "Landsberg Accused Products" in the original Complaint), and induced and continues to induce the direct infringement by unknown other manufacturers/sellers of virtual reality viewers substantially similar or identical to the Accused Products identified herein.

20. Defendant OPS makes and/or has made, imports (and/or has imported), uses (and/or has used), offers to sell and/or sells (and/or offered to sell and/or sold) OPS Accused Products, as further identified below, which activities are accused of directly infringing claims of each of the Asserted Patents. Specifically, OPS (under its former entity name, Orora North America ("ONA"), which name change occurred on or about July 29, 2016) manufactured the GC V2 Viewer on behalf of Google pursuant to a series of contracts/agreements, a direct infringement of claims of each of the Asserted Patents (induced by Google). Additionally, the manufacture, import, use, offer of sale, and sale of OPS's (non-Google) cardboard virtual reality viewers ("OPS Cardboard Viewers") infringes claims of each of the Asserted Patents. In addition to its direct infringement, OPS induced and induces others to infringe claims of each of the Asserted Patents at least by inducing third parties to have custom OPS Cardboard Viewers made in bulk for promotional purposes. (https://www.landsbergpromotions.com/:quicksearch.htm?quicksearchbox=VR). (Exhibit K). Upon information and belief, "Landsberg Promotions is also part of Landsberg Orora … and our larger [OPS] family." (Exhibit L). Upon information and belief, OPS is the parent company of former defendant Landsberg Orora and previously advertised OPS Cardboard Viewers on websites at https://www.landsberg.com/us/en/resources/virtual-viewers.html (ECF 1, Ex. U; Exhibit M) and https://www.landsberg.com/packaging/en/landsberg/cardboard-vr-viewers. After the filing of the original Complaint, (ECF 1), those websites were removed by Landsberg Orora, OPS, or some other entity acting in concert therewith. Upon information and belief, some OPS Accused Products were manufactured in Mexico by Kent H. Landsberg de Mexico S.A. de C.V., (see ECF 72, pp. 14-15), and thereafter imported into the United States by OPS (or an entity related thereto) and/or customers of OPS (or entities related thereto).

**JURISDICTION AND VENUE**

21. This Court has exclusive jurisdiction over the subject matter of the Complaint under 28 U.S.C. §§ 1331 and 1338(a).

22. Personal jurisdiction is proper in this Court with respect to both Defendants. OPS maintains several physical facilities and places of business in this Judicial District, employs several workers (including officers) in this Judicial District, and conducts business in this Judicial District (including through sales and offers for sale of the OPS Accused Products in this Judicial District). Google maintains a place of business in this Judicial District and induced/continues to induce OPS and others to infringe claims of each of the Asserted Patents, at least through sales and offers for sale of Accused Products in this Judicial District. Google answered the original Complaint without raising any challenge to personal jurisdiction. (See ECF 63).

23. Venue in this judicial district is proper under 28 U.S.C. § 1400(b). OPS maintains several physical facilities and places of business in this Judicial District, employs several workers (including officers) in this Judicial District, and conducts business in this Judicial District including through infringing offers for sale and sales of the OPS Accused Products in this Judicial District. (See, *e.g.*, Exhibit K (offering OPS Cardboard Viewers to customers in this Judicial District including through an express dropdown box for "Texas" when placing an order for items in a "cart"). Google maintains at least one physical place of business in this Judicial District, conducts business in this Judicial District including through infringing offers for sale and sales of the Google Accused Products in this Judicial District, and induced and continues to induce OPS's and other entities' acts of infringement through offers for sale and sales of Accused Products in this Judicial District. Google answered the original Complaint without raising any challenge to venue. (See ECF 63). Former defendants Emerge and Structural Graphics maintain offices in this Judicial District and documents/witnesses relevant to this action are likely to reside in this Judicial

District. Other third parties that purchased Accused Products in bulk for promotional purposes (*e.g.*, for trade shows, conventions, corporate events, etc.), presently unknown to DDC, are likely to reside in, and maintain documents and witnesses in, this Judicial District.

**TIMELINE OF RELEVANT DEVELOPMENTS**

24. On or around June 25, 2014, Google launched a rudimentary virtual reality viewer known as "Google Cardboard" at its I/O Conference (the "GC V1 Viewer"). Google's GC V1 Viewers included only a *magnetic switch* to interact with the magnetometer/compass of a smartphone to simulate a touch event.

25. Google highlighted DODOcase during a Virtual Reality presentation at the I/O Conference on or around June 26, 2014, as the first company to sell a VR viewer based on the GC V1 Viewer. Mr. Buckley made contact with members of the Google Cardboard team on the last day of the conference to discuss sourcing lenses for VR viewers.

26. DODOcase was a party to one or more non-disclosure agreements with Google Inc. (the predecessor to Defendant Google) in 2014.

27. On July 1, 2014, Mr. Buckley met Andrew Nartker – co-founder and Project Manager Lead for Google Cardboard – in a business development focused meeting where Mr. Nartker asked DODOcase to alter its marketing copy and to share detailed sales information about the VR viewer it was selling.

28. On or around July 10, 2014, Mr. Buckley of DODOcase emailed Mr. Nartker and Clay Bavor of Google, stating: "I think we have a clever/elegant way to make a conductive tap button which has a couple advantages… [e]liminates a potential choking hazard for children … [c]ould work universally on all smartphones… [and it] could help make this a better holiday gift."

29. In response, on or around July 11, 2014, Mr. Nartker stated in email: "Conductive button: Agree this could have benefits. We experimented briefly with this but didn't fully refine.

Alex [Kauffmann], one of our lead designers, has offered to visit DodoCase next week to share our tips here. Are you free next Weds afternoon/end of day? I'll try to join him as well if I can."

30. On July 16, 2014, DODOcase filed its first provisional application to which the Asserted Patents are related. (Exhibit N). Later that day, Mr. Buckley of DODOcase met with members of the Google Cardboard team to discuss his invention and other business matters.

31. On July 25, 2014, Mr. Buckley sent an email (with attached video clips) to Messrs. Nartker and Bavor, stating in pertinent part: "I am most excited by what I think is a breakthrough on a very simple conductive touch button for the cardboard viewer. Check out the attached video clips." The attached video clips showed a working prototype, based on the embodiments disclosed in the specification of the '075 Patent's first provisional application filed on July 16, 2014.

32. On July 26, 2014, Mr. Nartker – co-founder and Project Manager Lead for Google Cardboard – responded in an email to Mr. Buckley: "That button looks really neat! Thanks for sharing."

33. On July 27, 2014, Mr. Kauffmann – who "led all aspects of the design of Google's Cardboard viewer" – stated in an email to Mr. Buckley: "That's an ingenious button! Does it work consistently on a variety of phones? I'd love to play with it."

34. That same day, Mr. Bavor – computer scientist and Vice President of Virtual Reality/Augmented Reality at Google – wrote in an email to Mr. Buckley: "That button is genius."

35. On or around September 17, 2014, DODOcase launched the DODO V1.2 Viewer.

36. In October of 2014, Regan Arts published a book titled Beginner's Guide to Virtual Reality, which was packaged with the DODO V1.2 Viewer. That production resulted in 50,000 units shipped to customers across the United States.

37. In or around November 2014, Google provided DODOcase with a "Google confidential" document describing guidelines for "Google's Cardboard OEM Program" for its GC V1 Viewers.

38. In or around March 2015, Google provided DODOcase with a "Google Confidential" document titled: "Works With Google Cardboard: Program Compatibility Guidelines," which described Google's new Works With Google Cardboard ("WWGC") Program.

39. On or around April 1, 2015, Google created a "Google Confidential" Version 1.0 of a document titled: "Works with Google Cardboard: Viewer Profile and Badge Guidelines," which was provided to DODOcase.

40. On or around April 6, 2015, Google accepted the DODO V1.2 Viewer into the WWGC Program.

41. To become a participant in the WWGC Program, DODOcase was required to send Google two samples of the DODO V1.2 Viewer for Google's evaluation. After receiving written approval of its admission into the WWGC Program, DODOcase was only then permitted to identify on its products/packaging that the DODO V1.2 Viewer "Works With Google Cardboard" and use the WWGC badge/logo. As a participant in the WWGC Program, DODOcase was required to provide Google with data regarding its sales and production volume of the DODO V1.2 Viewer, as well as identification of the sales channels used by DODOcase. Google reserved the right to terminate DODOcase from the WWGC Program at any time in its sole discretion.

42. DODOcase was admitted to the "Featured Device Tier" of the WWGC Program (a higher tier than the "Certified Device" and "Non-Certified Device" tiers), which required a commitment to production of 100,000 units within 6 months of launch and collaboration with Google.

43. On or around April 16, 2015, Google prepared the Version 1.0 of a document titled "Works with Google Cardboard Viewer Profile and Badge Guidelines." (Exhibit O). That document stated: "The 'Works with Google Cardboard' (WWGC) badge and term are designed to indicate that a particular VR viewer has been certified by the manufacturer to be compatible with a Google Cardboard application ecosystem," and "[y]ou may use the Google Cardboard assets described below … if and only if you have been accepted to the WWGC Program and received a written approval from Google." That document further required: "If your viewer supports multiple platforms, the WWGC badge should be placed first in the lineup of badges, and should be of equal or greater size." Per that document: "If your viewer has been accepted to the WWGC Program and you have received a written approval from Google, you can use any of the following text with your viewer messaging: 'This [device] works with Google Cardboard' or 'Works with Google Cardboard.'" (Id.).

44. That document further detailed the process of applying to, and being accepted for, the WWGC Program. Specifically, potential participants were required to send two representative samples for evaluation and "[t]he chances of being accepted into the program are increased if your device: Does not have a headstrap" and "Has exactly one input (can be a magnet, a capacitive/conductive input, screen touch, Bluetooth or other type of input)." (Id.).

45. That document suggested "[f]or other manufacturing guidelines, download the best practices kit for Google Cardboard-inspired devices." (Id.).

46. On or around May 5, 2015, Google notified DODOcase that Google would announce a version 2 Google Cardboard virtual reality viewer at its I/O 2015 conference.

47. On May 14, 2015, DODOcase filed a second provisional application to which the Asserted Patents are related. (Exhibit P).

48. On or around May 28, 2015, Google launched its GC V2 Viewer, which was designed to replace the rudimentary magnet control mechanism of the GC V1 Viewer with a conductive/capacitive button to create a touch event on an electronic device.

49. On July 16, 2015, DODOcase filed Application No. 14/801,606 at the USPTO, which ultimately issued as the '075 Patent. (See Exhibit A).

50. On or around July 20, 2015, Google prepared several design documents for Google Cardboard VR Viewers including designs for a "Button – Conductive Pillow," "Button – Conductive Strip," "Lens," and "Viewer – Body." (Exhibit Q). These design specifications (also provided as design exchange format (".dxf") files) provided detailed instructions (including measurements to the millimeter and specific materials for use) for the manufacture of virtual reality viewers identical to the GC V2 Viewer:

| | | |
|---|---|---|
| DIMENSIONS ARE IN **MILLIMETERS** [INCHES] | Google | 1600 Amphitheatre Parkway<br>Mountain View CA 94043<br>USA |
| THIRD ANGLE PROJECTION | TITLE<br>Button - Conductive Pillow | |
| LAST UPDATED<br>7/20/2015 | SIZE<br>B<br>SCALE<br>4:1 | MATERIAL<br>Foam wrapped in a metallized fabric (polyester Ni/Cu) |

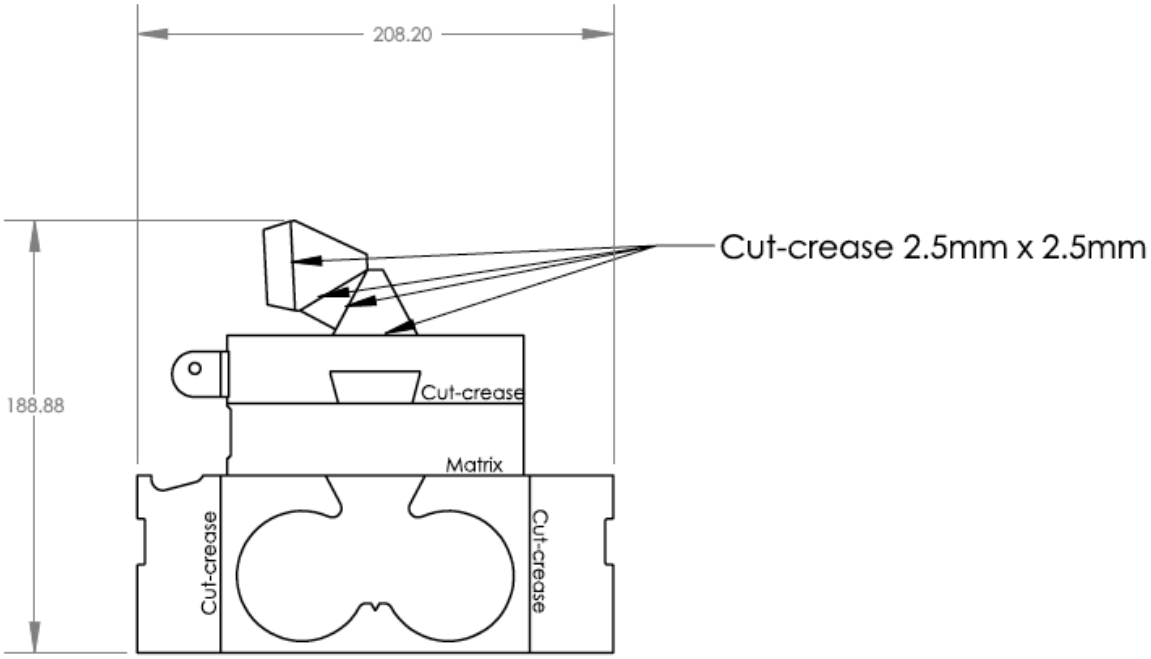
208.20
188.88
Cut-crease 2.5mm x 2.5mm
Cut-crease
Matrix
Cut-crease
Cut-crease

## Button

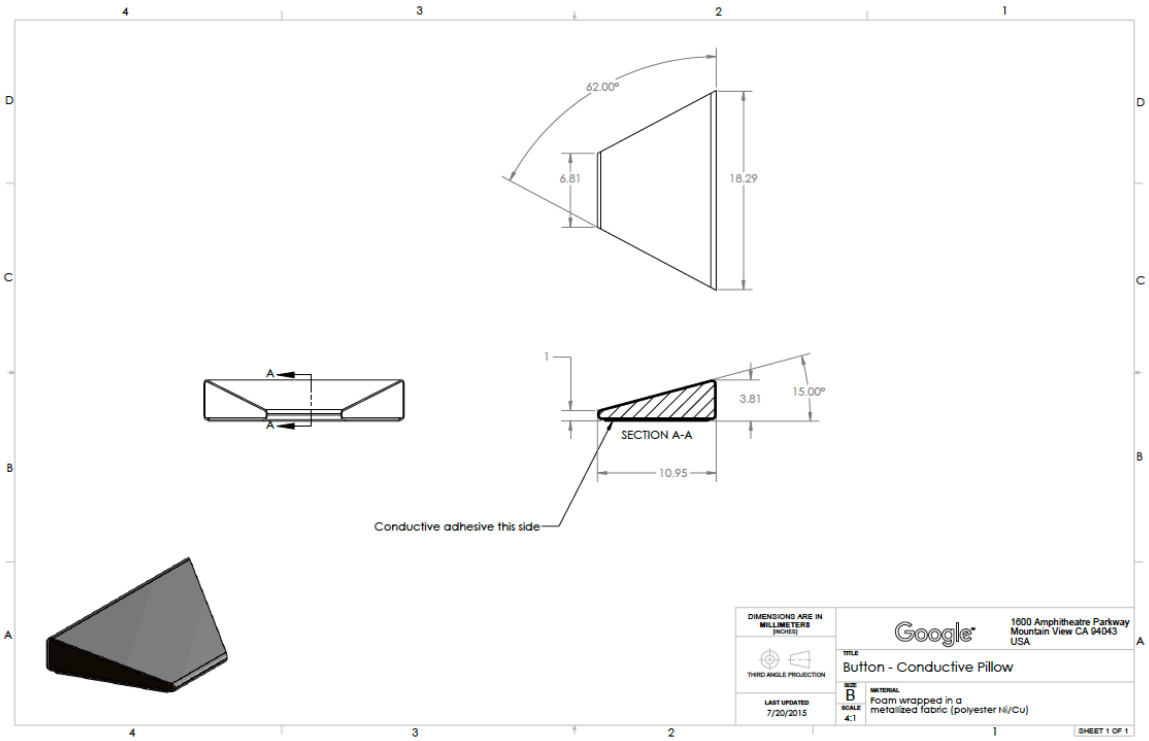
62.00°
6.81
18.29
A
A
1
3.81
15.00°
SECTION A-A
10.95
Conductive adhesive this side
DIMENSIONS ARE IN MILLIMETERS [INCHES]
THIRD ANGLE PROJECTION
LAST UPDATED 7/20/2015
Google
1600 Amphitheatre Parkway
Mountain View CA 94043
USA
TITLE
Button - Conductive Pillow
SIZE B
SCALE 4:1
MATERIAL
Foam wrapped in a metallized fabric (polyester Ni/Cu)
SHEET 1 OF 1

(Exhibit Q).

51. On or around July 30, 2015, Google released Version 1.0 of a document titled, "Google Cardboard (I/O 2015) Technical Specification" providing "the detailed technical specifications for the new Google Cardboard launched at Google I/O 2015." (Exhibit R).

52. That document provides "Design Specifications" that detail "the technical design specifications of Google Cardboard (I/O 2015 edition). It contains the detailed specifications for all major functional parts of Google Cardboard, including lenses, capacitive button, mechanical body, sleeve, oleophobic coating and printed artwork." (Id.).

53. That document provides the following figures and specifications of the GC V2 Viewer, with specific reference to the "conductive button":

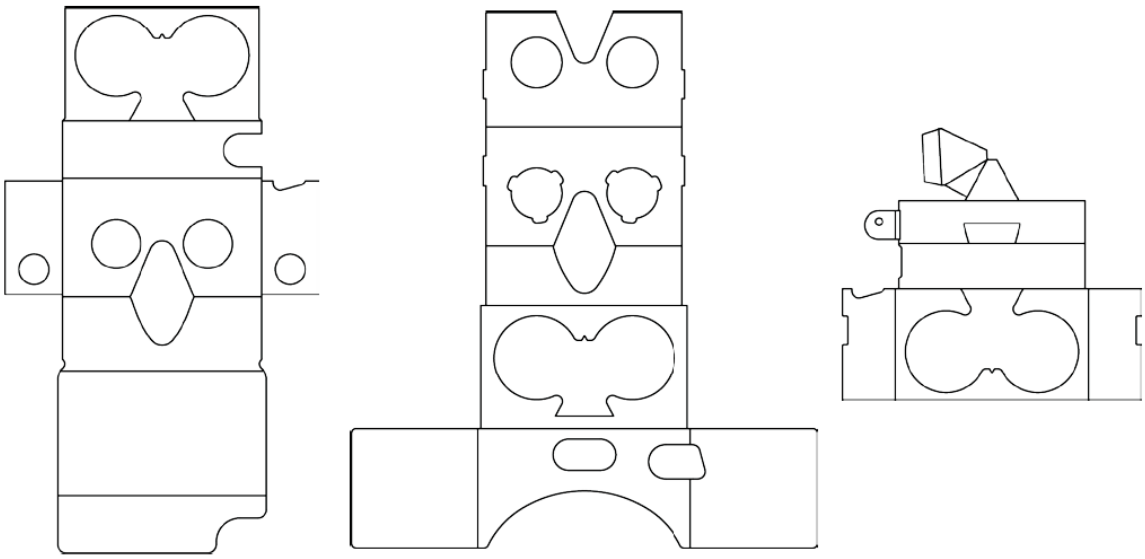

*From left to right, Figure 2. Cardboard mechanical body: "chassis" part. Figure 3. Cardboard mechanical body: "t-shirt" part. Figure 4. Cardboard mechanical body: "button" part.*

## 3.3. Button Specifications: Conductive Strip and Pillow

Google Cardboard (I/O 2015) button consists of two conductive parts ("pillow" and "strip"), glued to a cardboard-based "hammer".

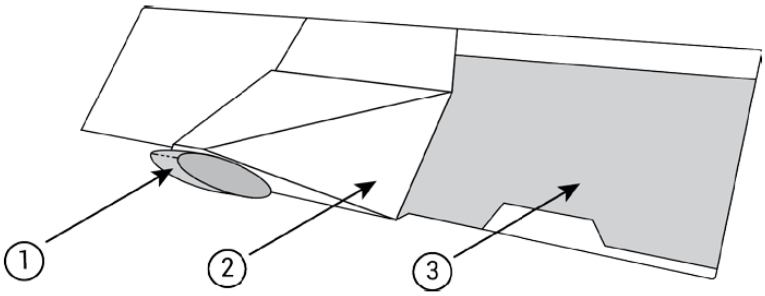


*Figure 7. Cardboard button parts: (1) - "pillow", (2) - "hammer", (3) - "conductive strip"*

### 3.3.1. Conductive Strip Specifications

| Parameters | Value | Unit |
|---|---|---|
| Material | Metallized fabric (polyester Ni/Cu) | |
| Surface resistivity | < 0.03 | Ω/sq. |
| Z-axis resistance | < 0.03 | Ω |

*Table 6. Conductive strip specifications.*

### 3.3.2. Conductive Pillow Specifications

| Parameters | Value | Unit |
|---|---|---|
| Surface material | Metallized fabric (polyester Ni/Cu) | |
| Core material | Soft urethane foam | |
| Core surface resistivity | < 0.07 | Ω/sq. |
| PSA type | Conductive | |
| PSA Z-axis resistance | < 0.05 | Ω |

*Table 7. Conductive pillow specifications.*

2. Button side flaps should have <0.5 x E-flute thickness misalignment, as it's critical for the button travel distance. If the units are assembled manually, the button side flaps should be aligned first.

### 4.4.2. Button Functionality

1. Various parts of the "hammer" should not come unglued. This can happen when the assembly stage takes too long and the glue dries up, or from not applying sufficient amounts of glue.

2. The button should be easily pushable down. After releasing it should spring back.
3. The conductive pillow should be centered within the phone-facing apertures, and the bottom edge of the conductive pillow should be lined up with the corresponding cardboard edge.

(Id.).

54. In or around July of 2015, Google prepared a document titled "Cardboard V2 Artwork (1:1 Scale)," (Exhibit S), which showed the schematics and assembly instructions for the GC V2 Viewer:

1. Isometric Viewer Diagram

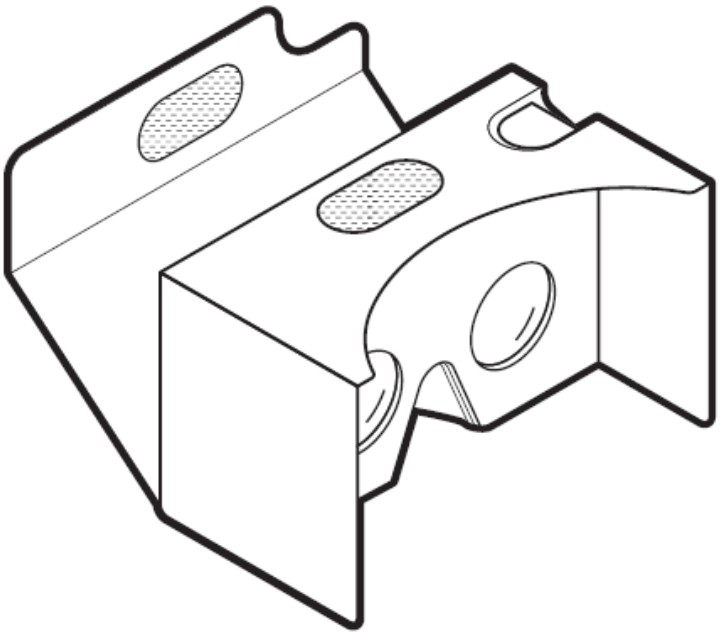

2. Isometric Assembly Instructions

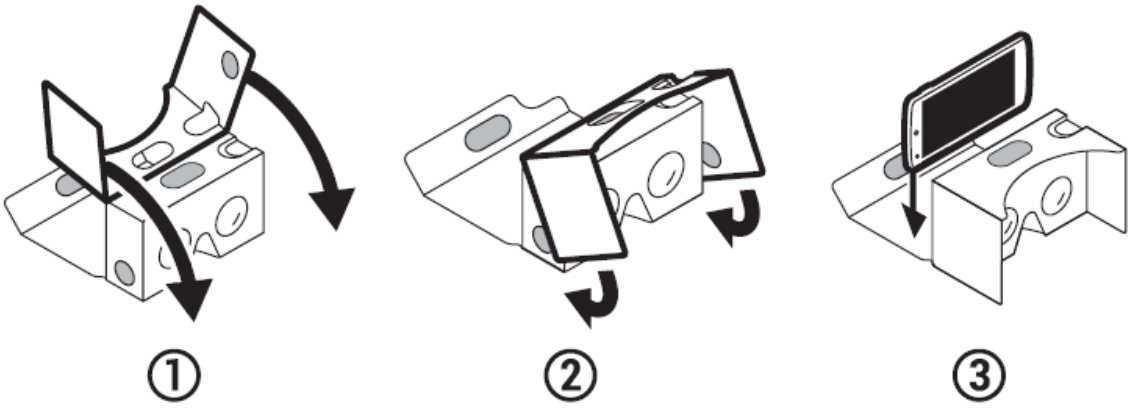

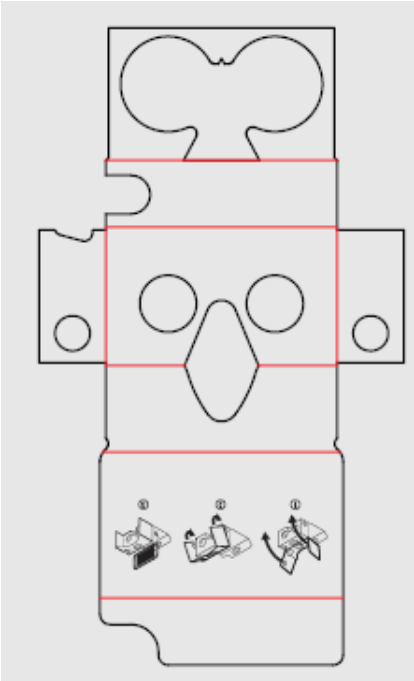

(Id.).

55. On or around August 17, 2015, Google released Version 2.0 of a document titled, "Works with Google Cardboard Guidelines and Best Practices." (Exhibit T). Therein, Google states: "'Works with Google Cardboard' Program has been designed to indicate to users that a given virtual reality viewer has been certified by the manufacturer to meet Google standards" and "[t]his document describes the best practices and lessons for manufacturing virtual reality viewers that are compatible with Works with Google Cardboard ecosystem." "It includes guidelines for mechanical viewer components." (Id.).

56. That document further links to "a set of specifications for manufacturing the new Google Cardboard (I/O 2015 edition)" that "can be found in the manufacturing template collection (wwgc_manufacturers_kit_v2.0.zip)," with an embedded link to the materials provided as

https://google.com/cardboard/downloads/wwgc_manufacturers_kit_2.0.zip. (Exhibit T).[2] That ".zip" file included ".dxf" (drawing exchange format) files that are designed to be used by manufacturers to create Accused Products to the same specifications as the GC V2 Viewer.

57. That document provides "Viewer guidelines" "for individual components of a typical 'Works with Google Cardboard' viewer" including the (1) – input, (2) – enclosure, and (3) – lenses:

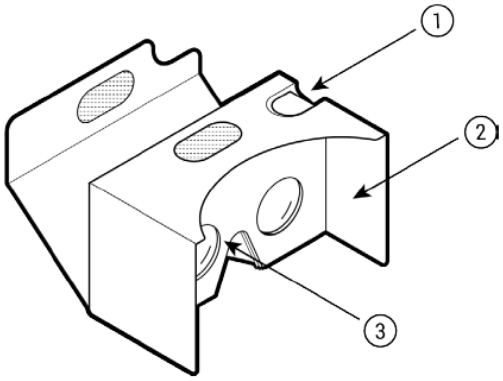


*Figure 1. Typical components of a WWGC viewer: (1) - input, (2) - enclosure, (3) - lenses.*

(Id.).

58. That document further describes the recommendations for the "Input" including that the "viewer should contain exactly one input" and the "viewer can use different types of inputs" including "conductive and capacitive inputs" (with the additional recommendation that, "[i]f you're using a conductive input which passes user's body charge onto the smartphone screen, ensure that the input is not touching the screen in a 'non-pressed' state."). (Id.).

[2] It appears the previously active link provided in Exhibit T is no longer active. However, Google provides a Cardboard Manufacturers Kit for download here: https://arvr.google.com/cardboard/pdfs/gc_manufacturers_kit.zip and a Best Practices Kit for download here: https://gstatic.com/cardboard_assets/cardboard_manufacturers_kit.zip.

59. That document further states: "Google Cardboard (I/O 2015 edition) uses 34 mm diameter aspherical singlet lenses," with a link to the "exact specification and technical drawings of these lenses in wwgc_manufacturers_kit_v2.0.zip template collection," with an embedded link to the materials provided as https://google.com/cardboard/downloads/wwgc_manufacturers_kit_2.0.zip (Id.).

60. That document further provides: "You are allowed to use any of the following approved text on your website or printed materials to refer to Google Cardboard:" "This [XYZ VR headset] was inspired by Google Cardboard" or "Inspired by Google Cardboard." (Id.).

61. The document then detailed the application process for applying to the WWGC Program, including submission of two representative samples for Google's evaluation. (Id.).

62. The "Change Log" of that document identifies a Version 1.0 from December 10, 2014, with "Initial manufacturing guidelines for Google Cardboard v1.1" and a Version 1.2 from April 16, 2015, which only "[a]dded information about the 'Works with Google Cardboard' Program." The Version 2.0 change on August 17, 2015, was the first change that was "[u]pdated to incorporate the new Google Cardboard (I/O 2015 edition) specifications." (Id.).

63. As presently advised, at least as early as May 2016, Google was falsely representing to the public that the GC V2 Viewer was "open source." (Exhibit U). To present, Google continues to advertise the GC V2 Viewer as "open-source." (See Exhibit V).

64. Specifically, Google represented, and continues to represent, to the public that the "Specifications for viewer design" are "open-source" and free for the public to use: "Use the Google Cardboard open-source specifications in this Help Center to create your own Cardboard-inspired viewer. The sections below explain the various specs and product tolerances for each part of the Cardboard viewer. For easier distribution within manufacturing teams, you may also find it

useful to download the full Cardboard Manufacturers Kit of specifications and tolerances" (with a link to https://google.com/get/cardboard/downloads/wwgc_manufacturers_kit.zip)[3]. (Id.).

65. Specifically, that document provides specific reference to the "button on a Google Cardboard viewer consist[ing] of two conductive parts ('pillow' and 'strip'), glued to a cardboard-based 'hammer'" and detailed specifications and tolerances for the conductive "pillow" and "strip":

Buttons

The button on a Google Cardboard viewer consists of two conductive parts ("pillow" and "strip"), glued to a cardboard-based "hammer".

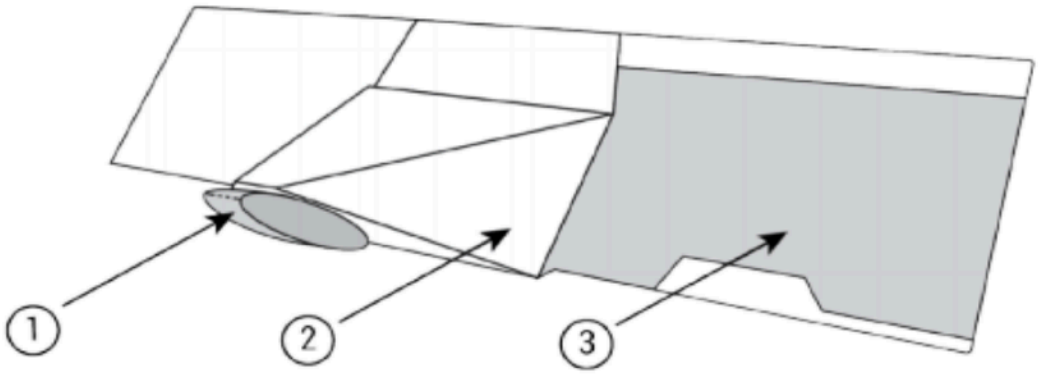


*Cardboard button parts: (1) - "pillow", (2) - "hammer", (3) - "conductive strip*

[3] It appears the previously active link provided in Exhibit V is no longer active. However, Google provides a Cardboard Manufacturers Kit for download at https://arvr.google.com/cardboard/pdfs/gc_manufacturers_kit.zip and a Best Practices Kit for download at https://gstatic.com/cardboard_assets/cardboard_manufacturers_kit.zip.

**Conductive strip specifications**

| Parameters | Value | Unit |
|---|---|---|
| Material | Metallized fabric (polyester Ni/Cu) | |
| Surface resistivity | < 0.03 | Ω/sq. |
| Z-axis resistance | < 0.03 | Ω |

**Conductive pillow specifications**

| Parameters | Value | Unit |
|---|---|---|
| Surface material | Metallized fabric (polyester Ni/Cu) | |
| Core material | Soft urethane foam | |
| Core surface resistivity | < 0.07 | Ω/sq. |
| PSA type | Conductive | |
| PSA Z-axis resistance | < 0.05 | Ω |

(Id.).

**THE ACCUSED PRODUCTS**

**Google Accused Products**

66. On January 9, 2023, DDC served its initial infringement contentions on Google, (see ECF 112), with supplements served on January 23, 2023, which detail the allegations of infringement with respect to all presently known Accused Products (incorporated herein by reference but not appended).

67. Google directly infringed the Asserted Patents at least by making or having made, importing, or having imported, using, offering to sell, and/or selling its GC V2 Viewer. As

presently advised, in or around March of 2021, Google stopped selling its GC V2 Viewer.[4] DDC will require discovery to ascertain the exact date that Google ceased direct infringement of the Asserted Patents and reserves the right to amend this Complaint in accordance with newly discovered evidence.

68. A YouTube video titled "Hands-on with Google's New Cardboard 2 Virtual Reality Viewer," available at https://www.youtube.com/watch?v=eZ1pwIxTw5Q, (the "GC V2 Viewer Video"), demonstrates the general functionality and features of the GC V2 Viewer. A Google document titled "Google Cardboard (I/O 2015) Technical Specification July 2015, v2.0," (Exhibit W), provides the detailed technical specifications for the GC Viewer.

69. The GC V2 Viewer included a conductive touch button:

(GC V2 Viewer Video at 1:39). See also Exhibit Q.

70. The GC V2 Viewer was a virtual reality viewer designed to operate with a mobile electronic device having a touchscreen (*e.g.*, "smartphone"):

[4] Despite a request for production served on November 21, 2022, Google has yet to produce physical copies of its discontinued GC V2 Viewer (stating that it "will conduct a reasonable search and will produce or make available for inspection two (2) physical units of the [GC V2] Viewer to the extent such units exist, and are in Google's possession, custody, or control").

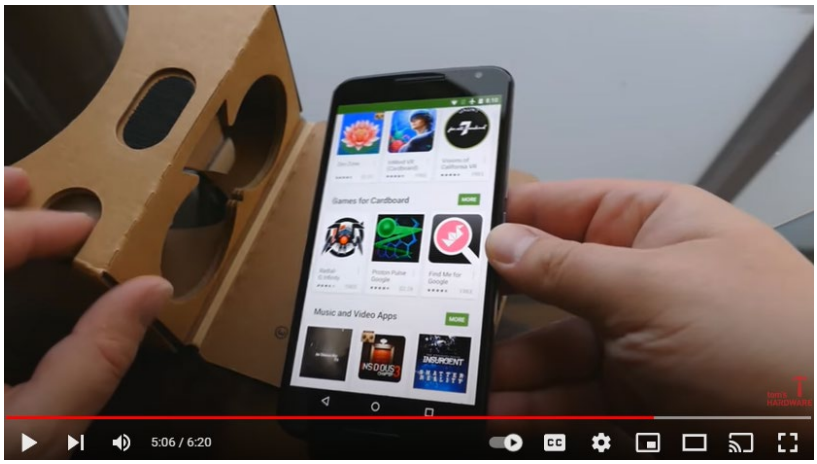


(GC V2 Viewer Video at 5:06).

The conductive pillow should be centered within the phone-facing apertures, and the bottom edge of the conductive pillow should be lined up with the corresponding cardboard edge.

(Exhibit W, p. 20 of 22).

71. The GC V2 Viewer included two lenses for viewing the mobile electronic device:

(GC V2 Viewer Video at 3:08).

3.1. Lens Optical Design Specifications

Google Cardboard (I/O 2015 edition) contains custom designed, 80° FOV, 34 mm diameter lenses.

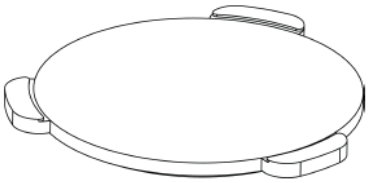

*Figure 1: Google Cardboard (I/O 2015 edition) lenses.*

(Exhibit W, p. 6 of 22).

72. The GC V2 Viewer comprised a housing configured to receive and hold the mobile electronic device such that the touchscreen was generally centered in a horizontal direction directly in a user's field of view:

(GC V2 Viewer Video at 5:53).

The conductive pillow should be centered within the phone-facing apertures, and the bottom edge of the conductive pillow should be lined up with the corresponding cardboard edge.

(Exhibit W, p. 20 of 22).

73. The GC V2 Viewer included an input mechanism that was accessible on the exterior:

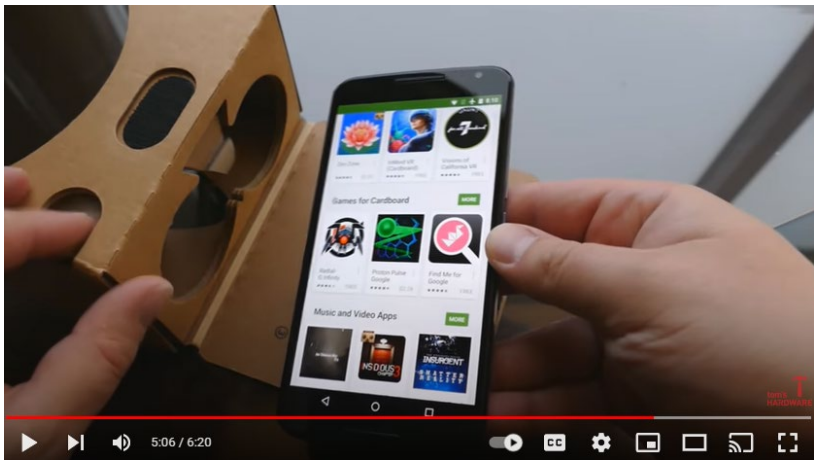


(GC V2 Viewer Video at 5:06). See also Exhibit Q.

74. The GC V2 Viewer used "capacitive"/"conductive" technology (to create a touch event on the touchscreen of a mobile electronic device), when the "button" was in a second position such that a portion of the "pillow" was configured to contact (and, in fact, contacted), the touchscreen of the mobile electronic device within the virtual reality viewer housing:

(GC V2 Viewer Video at 5:06).

75. The definition of Google Accused Products includes all Google products substantively similar to the GC V2 Viewer (including other Google virtual reality viewers that comprise a conductive/capacitive touch "button" for use with a touchscreen of a mobile electronic device). (See, *e.g.*, DDC's initial infringement contentions and supplements thereto). Further, as presently advised, the definition of Google Accused Products includes the viewers made, imported, offered for sale, sold, or used by each WWGC member in the United States including, but not limited to: Landsberg Orora, Pyrite, Structural Graphics, Insignia (a Best Buy Brand), Case-Mate, Goonex/QR, Hoonite Ltd, I AM CARDBOARD, Irusu, Knoxlabs, Unofficial Cardboard, Vusion, Wow Stuff!, Yoheha Innovation, Ltd., Zaak, Homido, Mattel, Powis, and Handstands ("WWGC Member Viewers").

76. Google also directly infringed (and continues to directly infringe) the Asserted Patents at least by advertising the price of, and providing a link to, certain WWGC Member Viewers on its website. (See https://arvr.google.com/cardboard/get-cardboard/; previously available at https://vr.google.com/cardboard/get-cardboard/). (See Exhibit J). Specifically, Google offered for sale the following WWGC Member Viewers: Landsberg (aka Orora) V2 Cardboard Virtual Reality Viewer, Irusu V2 Cardboard Virtual Reality Viewer, Zaak Two V2 Cardboard Virtual Reality Viewer, Mattel ViewMaster Deluxe VR Headset, Mattel ViewMaster Virtual Reality Headset (Starter Pack), and Powis Custom (aka 360 Fly) VR Headset. Further, Google continues to offer for sale the following WWGC Member Viewers: Vusion V3 Cardboard Virtual Reality Viewer, Pyrite (dba Maxbox) V2 Cardboard Virtual Reality Viewer, Knoxlabs V2 Cardboard Virtual Reality Viewer, I AM CARDBOARD V2 Cardboard Virtual Reality Viewer, Unofficial Cardboard UC 2.0 Cardboard Virtual Reality Viewer, I AM Cardboard DSCVR Virtual Reality Headset, and HMD Tech SARL (dba Homido) Grab Virtual Reality Viewer.

77. Google also indirectly infringed (and continues to indirectly infringe) the Asserted Patents based on its inducement of others to directly infringe the Asserted Patents. Specifically, Google induced each of the former defendants to infringe the Asserted Patents as set forth in detail in the original Complaint. Google further induced, and continues to induce, the infringement of the Asserted Patents by each of the WWGC Member Viewers. Google also induced, and continues to induce, the infringement of the Asserted Patents by identical or substantially similar virtual reality viewers of presently unknown third parties that became aware of Google's improper representation that the GC V2 Viewers were "open source."

78. After adequate discovery, DDC may seek leave to amend this Complaint to include additional details of infringement, if any, and may identify other products hereafter discovered to infringe the Asserted Patents.

**OPS Accused Products**

79. Upon information and belief, OPS directly infringed the Asserted Patents by manufacturing the GC V2 Viewers on behalf of Google. (See ECF 63, ¶ 20 (Google admitting that "Landsberg" manufactured certain parts of the GC V2 Viewers on behalf of Google); see also ECF 115 (detailing OPS's relationship with Google including contracts/agreements between Google Inc. and Orora North America).

80. OPS further directly infringed, and continues to infringe, the Asserted Patents at least by making or having made, importing, or having imported, using, offering to sell, and/or selling its OPS Cardboard Viewers, which include a "button" that uses capacitive/conductive touch technology to interact with the touchscreen of a smartphone.

81. Specifically, upon information and belief, OPS is the owner and/or operator of the website located at www.landsbergpromotions.com. (Exhibit X). On that website, OPS offers for sale numerous OPS Cardboard Viewers that can be customized. (Exhibit K).

82. The OPS Cardboard Viewers were also previously provided on a website located at www.landsberg.com:

(Exhibit M).

83. After filing of the original Complaint, OPS, Landsberg Orora, or some entity acting in concert therewith removed the website link to the OPS Cardboard Viewer. (See ECF 72, p. 11).

84. Former defendant Landsberg Orora contends – through the declaration of OPS's Vice President Finance – that it did not own the www.landsberg.com website. (See ECF 81-1, APP 8-9, ¶ 31). Accordingly, upon information and belief (including OPS's contractual relationship with Google via its predecessor ONA, and OPS's ownership of the website selling the same or similar products at www.landsbergpromotions.com), OPS is/was the owner and/or operator of www.landsberg.com. The former website at www.landsberg.com advertised the OPS Cardboard Viewers with the "Works With Google Cardboard" badge in the orange color described by Google as "primary" and directed to be used "whenever possible." Further, that website states: "We have provided millions of high-quality cardboard viewers to Fortune 500 companies, small businesses & other companies looking to take their marketing campaigns to new levels."

We have provided millions of high-quality cardboard viewers to Fortune 500 companies, small businesses & other companies looking to take their marketing campaigns to new levels. Each custom virtual reality viewer we design & manufacture is certified to work with Google Cardboard. Our design teams partner with you to develop a cutting-edge visual design on the highest-quality corrugated material. From there, our teams can print, manufacture, assemble & ship viewers for your target marketing campaigns.

Our full-service custom VR viewer solutions provide you with:

- Custom Printing: 1 to 6 color printing & litho label options available
- Prototypes: Available in 2 weeks or less
- Lead times: As low as 3 weeks

(Exhibit M).

Orange is the primary WWGC badge color. Use it whenever possible.

(Exhibit O, p. 8).

85. According to Google, "Landsberg" was a certified WWGC Member. In fact, the OPS Cardboard Viewers were offered for sale by Google on its website, with a price and link to landsberg.com:

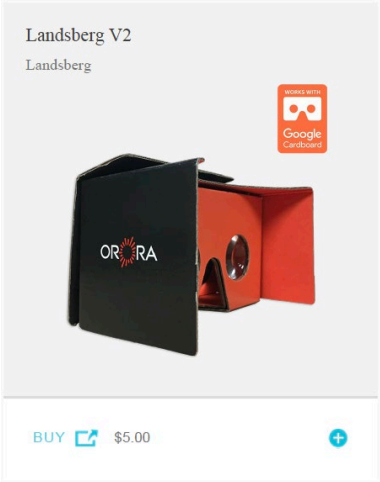

(Exhibit Y). The "BUY" link redirected to https://www.landsberg.com/packaging/en/landsberg/cardboard-vr-viewers.

86. Accordingly, upon information and belief (including based on the near identicality of the viewers and the relationships between OPS, ONA, and "Landsberg") the OPS Cardboard Viewers are/were designed and manufactured in accordance with the specifications set forth in Google's WWGC Program documentation and include the same features as the GC V2 Viewer identified in ¶¶ 66-78, see also, ¶¶ 50-65, *supra*. In fact, based on design features, the OPS Cardboard Viewers appear to have been manufactured using Google's specifications and .dxf files, with only minor, non-functional modifications.

87. Specifically, the OPS Cardboard Viewers include a conductive touch button; are designed to operate with a mobile electronic device having a touchscreen (*e.g.*, "smartphone"); includes two lenses for viewing the mobile electronic device; comprise a housing configured to receive and hold the mobile electronic device such that the touchscreen is generally centered in a horizontal direction directly in a user's field of view; include an input mechanism accessible on the exterior; and use capacitive/conductive technology to create a touch event on a mobile electronic device when the button is in a second position. (See ¶¶ 66-78, see also, ¶¶ 50-65, *supra*). (See also DDC's initial infringement contentions and supplements thereto).

88. Despite removal of the landsberg.com website, OPS continues to offer for sale and sell (including to customers in the State of Texas and this Judicial District), OPS Cardboard Viewers through the website it owns and/or operates at https://www.landsbergpromotions.com/:quicksearch.htm?quicksearchbox=VR. (See Exhibit K).

89. The definition of "OPS Accused Products" includes all products substantively similar to the OPS Cardboard Viewers (including other virtual reality viewers that comprise a

conductive/capacitive touch "button" for use with a touchscreen of a mobile electronic device) and GC V2 Viewers. (See also DDC's initial infringement contentions and supplement thereto, served upon counsel for OPS on January 27, 2023).

90. After adequate discovery, DDC may seek leave to amend this Complaint to include additional details of infringement, if any, and may identify other products hereafter discovered to infringe the Asserted Patents.

**Former Defendants Accused Products**

91. Former defendants Emerge, Structural Graphics, Homido, and Pyrite directly infringed the Asserted Patents at least by making, or having made, importing, or having imported, using, offering to sell, and/or selling its virtual reality viewers that included a "button" that used capacitive/conductive touch technology to interact with the touchscreen of a smartphone. (See DDC's initial infringement contentions and supplements thereto; see also ECF 105 and 107, Stipulated Final Consent Judgment and Permanent Injunction as to [Former] Defendant Pyrite).

92. As set forth in DDC's original Complaint (and DDC's initial infringement contentions and supplements thereto), the virtual reality viewers of each former defendant infringed claims of each Asserted Patent. Specifically, the virtual reality viewers of each former defendant included a conductive touch button; was designed to operate with a mobile electronic device having a touchscreen (*e.g.*, "smartphone"); included two lenses for viewing the mobile electronic device; comprised a housing configured to receive and hold the mobile electronic device such that the touchscreen is generally centered in a horizontal direction directly in a user's field of view; included an input mechanism accessible on the exterior; and used capacitive/conductive technology to create a touch event on a mobile electronic device when the button was in a second position.

93. Such infringement was induced by Google based, at least in part, on Google's instructions for manufacture set forth in the WWGC Program documentation and its representation that such specifications were "open source."

94. Former defendants Structural Graphics, Homido and Pyrite were WWGC Members. Google expressly advertised (and provided pricing and links to) at least Pyrite and Homido virtual reality viewers on Google's website. (Exhibit J). While Emerge is not known to have been a WWGC Member, Emerge advertised its products as "FULLY COMPATIBLE WITH GOOGLE CARDBOARD." (See image of Emerge box below.).

95. Despite resolution with the individual defendants, DDC contends that it has not been made whole with respect to Google's inducement.

**GOOGLE'S WILLFUL INDUCED INFRINGEMENT**

96. As set forth above in ¶¶ 24-65, Google learned of the DODOcase inventions relating to capacitive/conductive touch for virtual reality viewers in 2014, proclaimed that such a button was "genius", but then proceeded to advertise to the world that the patented inventions were

"open source" and provided Google-branded specifications and templates detailing how to use them.

97. Defendant Google willfully induced the former defendants (Emerge, Structural Graphics, Pyrite, and Homido), Defendant OPS, the WWGC Members identified above, and presently unknown other third parties to infringe claims of each of the Asserted Patents. Google continues to induce Defendant OPS, several of the WWGC Members identified above, and presently unknown other third parties to infringe claims of each of the Asserted Patents.

98. Google willfully induced and continues to induce infringement based on (a) its WWGC Program materials including specifications and .dxf design files that provided a blueprint for infringing devices and (b) its representation to the general public that the GC V2 design was "open source."

**GOOGLE'S KNOWLEDGE AND WILLFULNESS**

99. Upon information and belief, Google was aware of DODOcase's pending Application No. 14/801,606, its US Patent Publication No. 2016/0018853, and further filings with the Patent Office regarding the patent that would issue as the '075 Patent at least as early as June of 2016.

100. On or around June 17, 2016, third-party MerchSource, LLC (owner of the "Sharper Image" brand) contacted DODOcase, unsolicited, to inquire about a license to the patent that would issue as the '075 Patent. Negotiations regarding that license proceeded for the next several months.

101. On or around August 5, 2016, a Google employee approached DODOcase at the VRLA conference, stated that someone had informed them that DODOcase was obtaining a patent on virtual reality technology, asked about DODOcase's intention for its pending patent rights, and stated that they would be bringing this information back to the Google legal team for review.

102. On or around October 4, 2016, DODOcase and MerchSource executed a license with respect to the newly-issued '075 Patent.

103. On or around October 19, 2016, DODOcase emailed Google to discuss Google's interest in the '075 Patent.

104. Between October of 2016 and March of 2017, Google and DODOcase had discussions regarding the '075 Patent. Resolution could not be reached based on Google's position that it expected to obtain a release and license to the '075 Patent for the cost of an *inter partes* review proceeding ("IPR") at the Patent Trial and Appeal Board ("PTAB"). Google identified alleged prior art in support of its suggested intention to seek resolution through an IPR proceeding. That alleged prior art was provided to the Patent Office for evaluation during all subsequent applications relating to the '075 Patent; the Patent Office issued each subsequent related patent despite that alleged prior art.

105. Notably, while negotiating with Google regarding a potential license to the '075 Patent, DODOcase remained a participant in the WWGC program. Accordingly, DODOcase was concerned that continued efforts to seek fair licensing terms could lead Google to harm DODOcase's ongoing business. In fact, after negotiations commenced in the Fall of 2016, DODOcase experienced lost business due to apparent redirection of sales leads that had previously come through the WWGC Program.

106. Discussions with Google regarding licensing stalled thereafter.

107. In or around October of 2017, MerchSource informed DODOcase that it would no longer pay the royalties owed pursuant to its license. MerchSource contended that no royalties were owed because, *inter alia*, (a) Google was offering the GC V2 Viewer to the public for free as "open source" and (b) it believed the patent claims to be invalid.

108. Upon information and belief, Google was aware of MerchSource's efforts to attempt to invalidate the patent claims and/or assisted in those efforts. In fact, on or around October 27, 2017, MerchSource's President stated on a call with DODOcase that MerchSource intended to invalidate DODOcase's patents and had been in contact with Google.

109. On December 13, 2017, DODOcase filed a lawsuit against MerchSource in the Northern District of California seeking to enjoin MerchSource from breach of the license agreement.

110. On January 15, 2018, MerchSource filed petitions requesting IPR of the '075 Patent and post grant review ("PGR") of the '184 Patent.

111. Therein, MerchSource contended that claims of the '075 and '184 Patents were invalid in view of three alleged prior art references: "Tech#" (a YouTube video titled "Use Google Cardboard without Magnetometer (enabling magnetic ring support to every device)," allegedly published on May 10, 2015); "Compton" (US Patent Publication No. 2013/0141360, titled "Head Mounted Display for Viewing Three Dimensional Images," allegedly published on June 6, 2013), and "Gigaom" (a comment by "tobiasclaren" allegedly published on July 7, 2014 on a webpage titled "Why Google Cardboard is actually a huge boost for virtual reality").

112. None of the alleged prior art references negatively impact the Asserted Patents. Compton was of record before the US Patent Office during prosecution of all of the Asserted Patents. Gigaom does not constitute prior art because, *inter alia*, it does not qualify as a "printed publication" and Tech# does not constitute prior art because, *inter alia*, it does not qualify as a "printed publication" and, regardless, it falls within the 35 U.S.C. § 102(b)(1)(B) prior art exception.

113. Notwithstanding their status as non-prior art, Gigaom and Tech# were provided to the US Patent Office during patent prosecution proceedings that continued after institution of the IPR and PGR proceedings. That further patent prosecution resulted in the issuance of the '199, '000, and '001 Patents.

114. After extensive proceedings in the District Court, the Federal Circuit Court of Appeals, and the Patent Trial and Appeal Board, the IPR and PGR proceedings were terminated on August 16, 2019, per motion by MerchSource (such motion being compelled by the aforesaid Courts due to a forum selection clause governing such disputes between DODOcase and MerchSource).

**COUNT I:**
**GOOGLE'S DIRECT INFRINGEMENT OF UNITED STATES PATENT NO. 9,420,075**

115. DDC realleges and incorporates by reference paragraphs 1-114, inclusive, as though fully set forth herein.

116. Google's use, import, sale, offer for sale, and/or manufacture of the GC V2 Viewers directly infringed, and Google's continued offer for sale of WWGC Member Viewers directly infringes, at least independent Claims 1, 18 and 20 of the '075 Patent. (See DDC's initial infringement contentions and supplements thereto; see also, ECF 105 and 107, Stipulated Final Consent Judgment and Permanent Injunction).

***Claim 1***

117. Google's Accused Products are virtual reality viewers for use with a mobile electronic device having a touch-screen.

118. Google's Accused Products comprise a housing configured to receive the mobile electronic device.

119. Said housing is configured to hold the mobile electronic device such that the touch-screen was generally centered in a horizontal direction and directly in a user's field of view when looking into a generally hollow interior of the housing through a side opposite the touch-screen.

120. Google's Accused Products include an input mechanism that was accessible from an exterior of the housing and was moveable within the interior between at least a first position and an extended position.

121. Said input mechanism comprise an electrical shield having a surface, wherein only a portion of the surface of the electrical shield was configured to contact a central region of the touch-screen of the mobile electronic device when the input mechanism was in the extended position.

122. Google's GC V2 Viewers also infringed, and Google's continued offer for sale of WWGC Member Viewers infringes, dependent Claims 2-15 of the '075 Patent. (See DDC's initial infringement contentions and supplements thereto; see also, ECF 105 and 107, Stipulated Final Consent Judgment and Permanent Injunction).

***Claim 18***

123. Google's Accused Products are virtual reality viewers for use with a mobile electronic device having a capacitive touch-screen.

124. Google's Accused Products comprise a housing configured to receive the mobile electronic device and substantially enclose the touch-screen within a generally hollow interior of the housing, wherein the housing holds the touch-screen in a position that is generally centered in a horizontal direction and directly in a user's field of view when viewing the touch-screen through a back wall of the housing, wherein the back-wall is opposite the touch-screen and includes a left and a right lens for viewing a left region and a right region of the interior and the touch-screen.

125. Google's Accused Products include an input device including, a first portion that is accessible from an exterior of the housing, and an elongate[d] second portion disposed within the interior of the housing between the left and right regions wherein the second portion is generally oriented in a vertical direction that was perpendicular to the horizontal direction.

126. Said input device comprises an electric shield, wherein a first surface of the electric shield is disposed on the first portion and was electrically coupled to a second surface of the electric shield, wherein the second surface is disposed on the second portion within the interior and is generally centered in the horizontal direction between the left and right regions, and wherein only the second surface of the electric shield is configured to contact a central portion of the touch-screen of the mobile electronic device and selectively transfer a capacitive touch input to the touch-screen in response to a user interaction with the first portion of the input mechanism.

127. Google's Accused Products also infringed, and Google's continued offer for sale of WWGC Member Viewers infringes, dependent Claim 19 of the '075 Patent. (See DDC's initial infringement contentions and supplements thereto; see also, ECF 105 and 107, Stipulated Final Consent Judgment and Permanent Injunction).

***Claim 20***

128. Google's Accused Products are virtual reality viewers for use with a mobile electronic device having a capacitive touch-screen.

129. Google's Accused Products comprise a housing configured to receive a mobile electronic device within an interior of the housing, wherein the housing is formed to define a cut-out through an exterior side of the housing.

130. Google's Accused Products include an input mechanism that is accessible from an exterior of the housing and is moveable within the interior between at least a first position and an extended position.

131. Said input mechanism comprises a lever that is accessible through the cut-out; an electrical shield, wherein only portion of a surface of the electrical shield is configured to contact the touchscreen of the mobile electronic device when in the extended position, a flexible linkage coupled to the lever and the housing, wherein the linkage is configured to deform in response to actuation of the lever and thereby guide the portion of the surface between the first position and the extended position, and wherein at least a portion of the input mechanism defined at least a portion of a view divider within the interior of the housing.

132. To the extent required by law, DDC has complied with, and requires each licensee to comply with, the provisions of 35 U.S.C. § 287.

133. Google had knowledge of the application that issued as the '075 Patent prior to its issuance and at least as early as June of 2016.

134. Google's direct infringement as described above has injured DDC and will continue to injure DDC until enjoined.

135. DDC is entitled to recover damages adequate to compensate it for such infringement but in no event less than a reasonable royalty for Google's infringement of the '075 Patent, together with interest and costs (including any damages that may be available for a presently undeterminable period prior to issuance of the '075 Patent).

136. DDC requests that Google be determined jointly and severally liable for any and all damages awarded against OPS for direct infringement of the '075 Patent with respect to the GC V2 Viewers manufactured for Google by OPS (or anyone acting in concert therewith).

**COUNT II:**
**OPS'S DIRECT INFRINGEMENT OF UNITED STATES PATENT NO. 9,420,075**

137. DDC realleges and incorporates by reference paragraphs 1-114, inclusive, as though fully set forth herein.

138. OPS's use, import, sale, offers for sale, and manufacture of the OPS Accused Products directly infringed, and continues to infringe, at least independent Claims 1, 18, and 20 of the '075 Patent. (See DDC's initial infringement contentions and supplements thereto; see also, ECF 105 and 107, Stipulated Final Consent Judgment and Permanent Injunction).

***Claim 1***

139. OPS's Accused Products are virtual reality viewers for use with a mobile electronic device having a touch-screen.

140. OPS's Accused Products comprise a housing configured to receive the mobile electronic device.

141. Said housing is configured to hold the mobile electronic device such that the touch-screen is generally centered in a horizontal direction and directly in a user's field of view when looking into a generally hollow interior of the housing through a side opposite the touch-screen.

142. OPS's Accused Products include an input mechanism that is accessible from an exterior of the housing and is moveable within the interior between at least a first position and an extended position.

143. Said input mechanism comprises an electrical shield having a surface, wherein only a portion of the surface of the electrical shield is configured to contact a central region of the touch-screen of the mobile electronic device when the input mechanism is in the extended position.

144. OPS's Accused Products also infringe dependent Claims 2-15 of the '075 Patent. (See DDC's initial infringement contentions and supplements thereto; see also, ECF 105 and 107, Stipulated Final Consent Judgment and Permanent Injunction).

***Claim 18***

145. OPS's Accused Products are virtual reality viewers for use with a mobile electronic device having a capacitive touch-screen.

146. OPS's Accused Products comprise a housing configured to receive the mobile electronic device and substantially enclose the touch-screen within a generally hollow interior of the housing, wherein the housing holds the touch-screen in a position that is generally centered in a horizontal direction and directly in a user's field of view when viewing the touch-screen through a back wall of the housing, wherein the back-wall is opposite the touch-screen and includes a left and a right lens for viewing a left region and a right region of the interior and the touch-screen.

147. OPS's Accused Products include an input device including, a first portion that is accessible from an exterior of the housing, and an elongate[d] second portion disposed within the interior of the housing between the left and right regions wherein the second portion is generally oriented in a vertical direction that is perpendicular to the horizontal direction.

148. Said input device comprises an electric shield, wherein a first surface of the electric shield is disposed on the first portion and is electrically coupled to a second surface of the electric shield, wherein the second surface is disposed on the second portion within the interior and is generally centered in the horizontal direction between the left and right regions, and wherein only the second surface of the electric shield is configured to contact a central portion of the touch-screen of the mobile electronic device and selectively transfer a capacitive touch input to the touch-screen in response to a user interaction with the first portion of the input mechanism.

149. OPS's Accused Products also infringe dependent Claim 19 of the '075 Patent. (See DDC's initial infringement contentions and supplements thereto; see also, ECF 105 and 107, Stipulated Final Consent Judgment and Permanent Injunction).

***Claim 20***

150. OPS's Accused Products are virtual reality viewers for use with a mobile electronic device having a capacitive touch-screen.

151. OPS's Accused Products comprise a housing configured to receive a mobile electronic device within an interior of the housing, wherein the housing is formed to define a cut-out through an exterior side of the housing.

152. OPS's Accused Products include an input mechanism that is accessible from an exterior of the housing and is moveable within the interior between at least a first position and an extended position.

153. Said input mechanism comprises a lever that is accessible through the cut-out; an electrical shield, wherein only portion of a surface of the electrical shield is configured to contact the touchscreen of the mobile electronic device when in the extended position, a flexible linkage coupled to the lever and the housing, wherein the linkage is configured to deform in response to actuation of the lever and thereby guide the portion of the surface between the first position and the extended position, and wherein at least a portion of the input mechanism defines at least a portion of a view divider within the interior of the housing.

154. To the extent required by law, DDC has complied with, and requires each licensee to comply with, the provisions of 35 U.S.C. § 287.

155. OPS's direct infringement as described above has injured and will continue to injure DDC as long as such infringement continues.

156. DDC is entitled to recover damages adequate to compensate it for such infringement but in no event less than a reasonable royalty for OPS's infringement of the '075 Patent, together with interest and costs (including any damages that may be available for a presently undeterminable period prior to issuance of the '075 Patent).

157. DDC requests that OPS be determined jointly and severally liable for any and all damages awarded against Google for direct infringement of the '075 Patent with respect to the GC V2 Viewers manufactured by OPS (or anyone acting in concert therewith) for Google.

**COUNT III:**
**GOOGLE'S INDUCED INFRINGEMENT OF UNITED STATES PATENT NO. 9,420,075**

158. DDC realleges and incorporates by reference paragraphs 1-114 and 137-157, inclusive, as though fully set forth herein. DDC further incorporates by reference paragraphs 158-248 of DDC's original Complaint (ECF 1).

159. Google induced, and continues to induce, Defendant OPS (as well as former defendants and other entities that make, sell, offer to sell, import, or use virtual reality viewers with the same or similar features) to directly infringe the '075 Patent. (See DDC's initial infringement contentions and supplements thereto; see also, ECF 105 and 107, Stipulated Final Consent Judgment and Permanent Injunction).

160. Google actively encouraged, and continues to encourage, infringement of the '075 Patent through, *inter alia*, the dissemination of its Specifications and other WWGC Program documents, wherein Google improperly identifies the GC V2 Viewer as "open source" (in violation of the '075 Patent).

161. Google knew that its actions induced others – including Defendant OPS, WWGC Program members, and any entity with access to its documents published online that suggested that GC V2 Viewer specifications were "open source" – to directly infringe the '075 Patent.

162. Google's encouraging acts actually resulted in, and continue to result in, direct infringement of the '075 Patent (by Defendant OPS and other third parties).

163. To the extent required by law, DDC has complied with, and requires each licensee to comply with, the provisions of 35 U.S.C. § 287.

164. Google had knowledge of the application that issued as the '075 Patent prior to its issuance and at least as early as June of 2016.

165. Google's induced infringement as described above has injured and will continue to injure DDC as long as such infringement continues.

166. DDC is entitled to recover damages adequate to compensate it for such infringement but in no event less than a reasonable royalty for Google's infringement of the '075 Patent, together with interest and costs (including any damages that may be available for a presently undeterminable period prior to issuance of the '075 Patent).

167. DDC requests that Google be determined jointly and severally liable for any and all damages awarded against Defendant OPS for direct infringement of the '075 Patent.

**COUNT IV:**
**GOOGLE'S DIRECT INFRINGEMENT OF UNITED STATES PATENT NO. 9,811,184**

168. DDC realleges and incorporates by reference paragraphs 1-114, inclusive, as though fully set forth herein.

169. Google's use, import, sale, offers for sale, and manufacture of the GC V2 Viewers directly infringed, and Google's continued offer for sale of WWGC Member Viewers directly infringes, at least independent Claim 12 of the '184 Patent. (See DDC's initial infringement contentions and supplements thereto; see also, ECF 105 and 107, Stipulated Final Consent Judgment and Permanent Injunction).

***Claim 12***

170. Google's Accused Products are virtual reality viewers for use with a mobile electronic device having a touchscreen.

171. Google's Accused Products comprise a first lens and a second lens, wherein the first lens is facing the same direction as the second lens and wherein the first lens and the second lens are spaced apart in a horizontal direction.

172. Google's Accused Products comprise an enclosure having a first side and a second side opposite the first side, the first side configured to hold the first lens and the second lens, the second side configured to receive the mobile electronic device.

173. Google's Accused Products include a user input that was accessible from an exterior of the enclosure and has a first position and a second position.

174. Google's Accused Products include a touchscreen input conductively coupled to the user input and generally centered between the first lens and the second lens in the horizontal direction, wherein, upon receipt of the mobile electronic device, the touchscreen input is in physical contact with the touchscreen when the user input is in the second position.

175. Google's GC V2 Viewers also infringed, and Google's continued offer for sale of WWGC Member Viewers infringes, dependent Claims 15-18 and 20 of the '184 Patent. (See DDC's initial infringement contentions and supplements thereto; see also, ECF 105 and 107, Stipulated Final Consent Judgment and Permanent Injunction).

176. To the extent required by law, DDC has complied with, and requires each licensee to comply with, the provisions of 35 U.S.C. § 287.

177. Upon information and belief, Google had knowledge of the application that issued as the '184 Patent prior to its issuance and as early as its publication on June 22, 2017.

178. Google's direct infringement as described above has injured DDC and will continue to injure DDC until enjoined.

179. DDC is entitled to recover damages adequate to compensate it for such infringement but in no event less than a reasonable royalty for Google's infringement of the '184 Patent, together with interest and costs (including any damages that may be available for a presently undeterminable period prior to issuance of the '184 Patent).

180. DDC requests that Google be determined jointly and severally liable for any and all damages awarded against OPS for direct infringement of the '184 Patent with respect to the GC V2 Viewers manufactured for Google by OPS (or anyone acting in concert therewith).

**COUNT V:**
**OPS'S DIRECT INFRINGEMENT OF UNITED STATES PATENT NO. 9,811,184**

181. DDC realleges and incorporates by reference paragraphs 1-114, inclusive, as though fully set forth herein.

182. OPS's use, import, sale, offers for sale, and manufacture of the OPS Accused Products directly infringed, and continue to infringe, at least independent Claim 12 of the '184 Patent. (See DDC's initial infringement contentions and supplements thereto; see also, ECF 105 and 107, Stipulated Final Consent Judgment and Permanent Injunction).

***Claim 12***

183. OPS's Accused Products are virtual reality viewers for use with a mobile electronic device having a touchscreen.

184. OPS's Accused Products comprise a first lens and a second lens, wherein the first lens is facing the same direction as the second lens and wherein the first lens and the second lens are spaced apart in a horizontal direction.

185. OPS's Accused Products comprise an enclosure having a first side and a second side opposite the first side, the first side configured to hold the first lens and the second lens, the second side configured to receive the mobile electronic device.

186. OPS's Accused Products include a user input that is accessible from an exterior of the enclosure and has a first position and a second position.

187. OPS's Accused Products include a touchscreen input conductively coupled to the user input and generally centered between the first lens and the second lens in the horizontal direction, wherein, upon receipt of the mobile electronic device, the touchscreen input is in physical contact with the touchscreen when the user input is in the second position.

188. OPS's Accused Products also infringe dependent Claims 15-18 and 20 of the '184 Patent. (See DDC's initial infringement contentions and supplements thereto; see also, ECF 105 and 107, Stipulated Final Consent Judgment and Permanent Injunction).

189. To the extent required by law, DDC has complied with, and requires each licensee to comply with, the provisions of 35 U.S.C. § 287.

190. OPS's direct infringement as described above has injured and will continue to injure DDC as long as such infringement continues.

191. DDC is entitled to recover damages adequate to compensate it for such infringement but in no event less than a reasonable royalty for OPS's infringement of the '184 Patent, together with interest and costs (including any damages that may be available for a presently undeterminable period prior to issuance of the '184 Patent).

192. DDC requests that OPS be determined jointly and severally liable for any and all damages awarded against Google for direct infringement of the '184 Patent with respect to the GC V2 Viewers manufactured by OPS (or any entity acting in concert therewith) for Google.

**COUNT VI:**
**GOOGLE'S INDUCED INFRINGEMENT OF UNITED STATES PATENT NO. 9,811,184**

193. DDC realleges and incorporates by reference paragraphs 1-114 and 181-192, inclusive, as though fully set forth herein. DDC further incorporates by reference paragraphs 272-327 of DDC's original Complaint (ECF 1).

194. Google induced, and continues to induce, Defendant OPS (as well as former defendants and other entities that make, sell, offer to sell, import, or use virtual reality viewers with the same or similar features) to directly infringe the '184 Patent. (See DDC's initial infringement contentions and supplements thereto; see also, ECF 105 and 107, Stipulated Final Consent Judgment and Permanent Injunction).

195. Google actively encouraged, and continues to encourage, infringement of the '184 Patent through, *inter alia*, the dissemination of its Specifications and other WWGC Program documents, wherein Google improperly identifies the GC V2 Viewer "open source" (in violation of the '184 Patent).

196. Google knew that its actions induced others – including Defendant OPS, WWGC Program members, and any entity with access to its documents published online that suggested that GC V2 Viewer specifications were "open source" – to directly infringe the '184 Patent.

197. Google's encouraging acts actually resulted in, and continue to result in, direct infringement of the '184 Patent (by Defendant OPS and other third parties).

198. To the extent required by law, DDC has complied with, and requires each licensee to comply with, the provisions of 35 U.S.C. § 287.

199. Upon information and belief, Google had knowledge of the application that issued as the '184 Patent prior to its issuance and as early as its publication on June 22, 2017.

200. Google's induced infringement as described above has injured and will continue to injure DDC as long as such infringement continues.

201. DDC is entitled to recover damages adequate to compensate it for such infringement but in no event less than a reasonable royalty for Google's infringement of the '184 Patent, together with interest and costs (including any damages that may be available for a presently undeterminable period prior to issuance of the '184 Patent).

202. DDC requests that Google be determined jointly and severally liable for any and all damages awarded against Defendant OPS for direct infringement of the '184 Patent.

**COUNT VII:**
**GOOGLE'S DIRECT INFRINGEMENT OF UNITED STATES PATENT NO. 10,528,199**

203. DDC realleges and incorporates by reference paragraphs 1-114, inclusive, as though fully set forth herein.

204. Google's use, import, sale, offer for sale, and/or manufacture of the GC V2 Viewers directly infringed, and Google's continued offer for sale of WWGC Member Viewers directly infringes, at least independent Claims 1 and 30 of the '199 Patent. (See DDC's initial infringement contentions and supplements thereto; see also, ECF 105 and 107, Stipulated Final Consent Judgment and Permanent Injunction).

***Claim 1***

205. Google's Accused Products are virtual reality viewers for use with a mobile electronic device having a touchscreen.

206. Google's Accused Products comprise a first lens and a second lens, wherein the first lens is facing the same direction as the second lens, and wherein the first lens and the second lens are spaced apart in a horizontal direction.

207. Google's Accused Products comprise a frame having a first side and a second side opposite the first side, the first side configured to hold the first lens and the second lens, the second side configured to receive the mobile electronic device, wherein the frame is configured to hold the mobile electronic device such that the mobile electronic device is generally centered in a horizontal direction and directly in a user's field of view when looking through the first side of the frame.

208. Google's Accused Products include a touchscreen input constructed of material and having a surface such that only a portion of the surface of the touchscreen input is configured to contact a central region of the touchscreen of the mobile electronic device when the touchscreen input is activated.

209. Google's GC V2 Viewers also infringed, and Google's continued offer for sale of WWGC Member Viewers infringes, dependent Claims 2, 4-6, and 16-27 of the '199 Patent. (See DDC's initial infringement contentions and supplements thereto; see also, ECF 105 and 107, Stipulated Final Consent Judgment and Permanent Injunction).

***Claim 30***

210. Google's Accused Products are virtual reality viewers for use with a mobile electronic device having a touchscreen.

211. Google's Accused Products comprise a first lens and a second lens, wherein the first lens is facing the same direction as the second lens, and wherein the first lens and the second lens are spaced apart in a horizontal direction.

212. Google's Accused Products comprise a frame having a first side and a second side opposite the first side, the first side configured to hold the first lens and the second lens, the second side configured to receive the mobile electronic device, wherein the frame is configured to hold the mobile electronic device such that the mobile electronic device is generally centered in a

horizontal direction and directly in a user's field of view when looking through the first side of the frame.

213. Google's Accused Products include a user input that is accessible from an exterior of the enclosure and has a first position and a second position.

214. Google's Accused Products include a touchscreen input that is coupled to the user input and generally centered between the first lens and the second lens in the horizontal direction, wherein the touchscreen has a surface such that only a portion of the surface of the touchscreen input is configured to contact a central region of the touchscreen when the user input is in the second position.

215. Google's GC V2 Viewers also infringed, and Google's continued offer for sale of WWGC Member Viewers infringes, dependent Claims 33-35 and 37-40 of the '199 Patent. (See DDC's initial infringement contentions and supplements thereto; see also, ECF 105 and 107, Stipulated Final Consent Judgment and Permanent Injunction).

216. To the extent required by law, DDC has complied with, and requires each licensee to comply with, the provisions of 35 U.S.C. § 287.

217. Upon information and belief, Google had knowledge of the application that issued as the '199 Patent prior to its issuance and as early as its publication on May 10, 2018.

218. Google's direct infringement as described above has injured DDC and will continue to injure DDC until enjoined.

219. DDC is entitled to recover damages adequate to compensate it for such infringement but in no event less than a reasonable royalty for Google's infringement of the '199 Patent, together with interest and costs (including any damages that may be available for a presently undeterminable period prior to issuance of the '199 Patent).

220. DDC requests that Google be determined jointly and severally liable for any and all damages awarded against OPS for direct infringement of the '199 Patent with respect to the GC V2 Viewers manufactured for Google by OPS (or anyone acting in concert therewith).

**COUNT VIII:**
**OPS'S DIRECT INFRINGEMENT OF UNITED STATES PATENT NO. 10,528,199**

221. DDC realleges and incorporates by reference paragraphs 1-114, inclusive, as though fully set forth herein.

222. OPS's use, import, sale, offers for sale, and manufacture of the OPS Accused Products directly infringed, and continues to infringe, at least independent Claims 1 and 30 of the '199 Patent. (See DDC's initial infringement contentions and supplements thereto; see also, ECF 105 and 107, Stipulated Final Consent Judgment and Permanent Injunction).

***Claim 1***

223. OPS's Accused Products are virtual reality viewers for use with a mobile electronic device having a touchscreen.

224. OPS's Accused Products comprise a first lens and a second lens, wherein the first lens is facing the same direction as the second lens, and wherein the first lens and the second lens are spaced apart in a horizontal direction.

225. OPS's Accused Products comprise a frame having a first side and a second side opposite the first side, the first side configured to hold the first lens and the second lens, the second side configured to receive the mobile electronic device, wherein the frame is configured to hold the mobile electronic device such that the mobile electronic device is generally centered in a horizontal direction and directly in a user's field of view when looking through the first side of the frame.

226. OPS's Accused Products include a touchscreen input constructed of material and having a surface such that only a portion of the surface of the touchscreen input is configured to contact a central region of the touchscreen of the mobile electronic device when the touchscreen input is activated.

227. OPS's Accused Products also infringe dependent Claims 2, 4-6, and 16-27 of the '199 Patent. (See DDC's initial infringement contentions and supplements thereto; see also, ECF 105 and 107, Stipulated Final Consent Judgment and Permanent Injunction).

***Claim 30***

228. OPS's Accused Products are virtual reality viewers for use with a mobile electronic device having a touchscreen.

229. OPS's Accused Products comprise a first lens and a second lens, wherein the first lens is facing the same direction as the second lens, and wherein the first lens and the second lens are spaced apart in a horizontal direction.

230. OPS's Accused Products comprise a frame having a first side and a second side opposite the first side, the first side configured to hold the first lens and the second lens, the second side configured to receive the mobile electronic device, wherein the frame is configured to hold the mobile electronic device such that the mobile electronic device is generally centered in a horizontal direction and directly in a user's field of view when looking through the first side of the frame.

231. OPS's Accused Products include a user input that is accessible from an exterior of the enclosure and has a first position and a second position.

232. OPS's Accused Products include a touchscreen input that is coupled to the user input and generally centered between the first lens and the second lens in the horizontal direction, wherein the touchscreen has a surface such that only a portion of the surface of the touchscreen

input is configured to contact a central region of the touchscreen when the user input is in the second position.

233. OPS's Accused Products also infringe dependent Claims 33-35 and 37-40 of the '199 Patent. (See DDC's initial infringement contentions and supplements thereto; see also, ECF 105 and 107, Stipulated Final Consent Judgment and Permanent Injunction).

234. To the extent required by law, DDC has complied with, and requires each licensee to comply with, the provisions of 35 U.S.C. § 287.

235. OPS's direct infringement as described above has injured and will continue to injure DDC as long as such infringement continues.

236. DDC is entitled to recover damages adequate to compensate it for such infringement but in no event less than a reasonable royalty for OPS's infringement of the '199 Patent, together with interest and costs (including any damages that may be available for a presently undeterminable period prior to issuance of the '199 Patent).

237. DDC requests that OPS be determined jointly and severally liable for any and all damages awarded against Google for direct infringement of the '199 Patent with respect to the GC V2 Viewers manufactured by OPS (or anyone acting in concert therewith) for Google.

**COUNT IX:**
**GOOGLE'S INDUCED INFRINGEMENT OF UNITED STATES PATENT NO. 10,528,199**

238. DDC realleges and incorporates by reference paragraphs 1-114 and 221-237, inclusive, as though fully set forth herein. DDC further incorporates by reference paragraphs 356-436 of DDC's original Complaint (ECF 1).

239. Google induced, and continues to induce, Defendant OPS (as well as former defendants and other entities that make, sell, offer to sell, import, or use virtual reality viewers with the same or similar features) to directly infringe the '199 Patent. (See DDC's initial

infringement contentions and supplements thereto; see also, ECF 105 and 107, Stipulated Final Consent Judgment and Permanent Injunction).

240. Google actively encouraged, and continues to encourage, infringement of the '199 Patent through, *inter alia*, the dissemination of its Specifications and other WWGC Program documents, wherein Google improperly identifies the GC V2 Viewer "open source" (in violation of the '199 Patent).

241. Google knew that its actions induced others – including Defendant OPS, WWGC Program members, and any entity with access to its documents published online that suggested that GC V2 Viewer specifications were "open source" – to directly infringe the '199 Patent.

242. Google's encouraging acts actually resulted in, and continue to result in, direct infringement of the '199 Patent (by Defendant OPS and other third parties).

243. To the extent required by law, DDC has complied with, and requires each licensee to comply with, the provisions of 35 U.S.C. § 287.

244. Upon information and belief, Google had knowledge of the application that issued as the '199 Patent prior to its issuance and as early as its publication on May 10, 2018.

245. Google's induced infringement as described above has injured and will continue to injure DDC as long as such infringement continues.

246. DDC is entitled to recover damages adequate to compensate it for such infringement but in no event less than a reasonable royalty for Google's infringement of the '199 Patent, together with interest and costs (including any damages that may be available for a presently undeterminable period prior to issuance of the '199 Patent).

247. DDC requests that Google be determined jointly and severally liable for any and all damages awarded against Defendant OPS for direct infringement of the '199 Patent.

**COUNT X:**
**GOOGLE'S DIRECT INFRINGEMENT OF UNITED STATES PATENT NO. 11,093,000**

248. DDC realleges and incorporates by reference paragraphs 1-114, inclusive, as though fully set forth herein.

249. Google's offer for sale of WWGC Member Viewers directly infringed, and continues to infringe, at least independent Claim 1 of the '000 Patent. (See DDC's initial infringement contentions and supplements thereto; see also, ECF 105 and 107, Stipulated Final Consent Judgment and Permanent Injunction).

***Claim 1***

250. The WWGC Member Viewers are virtual reality apparatuses.

251. The WWGC Member Viewers comprise a housing having a portion configured to receive a mobile electronic device having a touchscreen display.

252. Said housing further includes two lenses.

253. The WWGC Member Viewers include an input device accessible from an exterior of the housing.

254. The WWGC Member Viewers include a contact element located within an interior of the housing, the contact element coupled to the input device and configured to generate a detectable touch event at the touchscreen display of the mobile electronic device.

255. The WWGC Member Viewers also infringe dependent Claims 2-11, 13-14, 18-24, and 27-33 of the '000 Patent. (See DDC's initial infringement contentions and supplements thereto; see also, ECF 105 and 107, Stipulated Final Consent Judgment and Permanent Injunction).

256. To the extent required by law, DDC has complied with, and requires each licensee to comply with, the provisions of 35 U.S.C. § 287.

257. Upon information and belief, Google had knowledge of the application that would issue as the '000 Patent prior to its issuance and as early as its publication on June 11, 2020.

258. Google's direct infringement as described above has injured and will continue to injure DDC as long as such infringement continues.

259. DDC is entitled to recover damages adequate to compensate it for such infringement but in no event less than a reasonable royalty for Google's infringement of the '000 Patent, together with interest and costs (including any damages that may be available for a presently undeterminable period prior to issuance of the '000 Patent).

**COUNT XI:**
**OPS'S DIRECT INFRINGEMENT OF UNITED STATES PATENT NO. 11,093,000**

260. DDC realleges and incorporates by reference paragraphs 1-114, inclusive, as though fully set forth herein.

261. OPS's use, import, sale, offers for sale, and manufacture of the OPS Accused Products directly infringed, and continues to infringe, at least independent Claims 1 of the '000 Patent. (See DDC's initial infringement contentions and supplements thereto; see also, ECF 105 and 107, Stipulated Final Consent Judgment and Permanent Injunction).

***Claim 1***

262. OPS's Accused Products are virtual reality apparatuses.

263. OPS's Accused Products comprise a housing having a portion configured to receive a mobile electronic device having a touchscreen display.

264. Said housing further includes two lenses.

265. OPS's Accused Products include an input device accessible from an exterior of the housing.

266. OPS's Accused Products include a contact element located within an interior of the housing, the contact element coupled to the input device and configured to generate a detectable touch event at the touchscreen display of the mobile electronic device.

267. OPS's Accused Products also infringe dependent Claims 2-11, 13-14, 18-24, and 27-33 of the '000 Patent. (See DDC's initial infringement contentions and supplements thereto; see also, ECF 105 and 107, Stipulated Final Consent Judgment and Permanent Injunction).

268. To the extent required by law, DDC has complied with, and requires each licensee to comply with, the provisions of 35 U.S.C. § 287.

269. OPS's direct infringement as described above has injured and will continue to injure DDC as long as such infringement continues.

270. DDC is entitled to recover damages adequate to compensate it for such infringement but in no event less than a reasonable royalty for OPS's infringement of the '000 Patent, together with interest and costs (including any damages that may be available for a presently undeterminable period prior to issuance of the '000 Patent).

**COUNT XII:**
**GOOGLE'S INDUCED INFRINGEMENT OF UNITED STATES PATENT NO. 11,093,000**

271. DDC realleges and incorporates by reference paragraphs 1-114 and 260-270, inclusive, as though fully set forth herein. DDC further incorporates by reference paragraphs 447-501 of DDC's original Complaint (ECF 1).

272. Google induced, and continues to induce, Defendant OPS (as well as former defendants and other entities that make, sell, offer to sell, import, or use virtual reality viewers with the same or similar features) to directly infringe the '000 Patent. (See DDC's initial infringement contentions and supplements thereto; see also, ECF 105 and 107, Stipulated Final Consent Judgment and Permanent Injunction).

273. Google actively encouraged, and continues to encourage, infringement of the '000 Patent through, *inter alia*, the dissemination of its Specifications and other WWGC Program documents, wherein Google improperly identifies GC V2 Viewer as "open source" (in violation of the '000 Patent).

274. Google knew that its actions induced others – including Defendant OPS, WWGC Program members, and any entity with access to its documents published online that suggested that GC V2 Viewer specifications were "open source" – to directly infringe the '000 Patent.

275. Google's encouraging acts actually resulted in, and continue to result in, direct infringement of the '000 Patent (by Defendant OPS and other third parties).

276. To the extent required by law, DDC has complied with, and requires each licensee to comply with, the provisions of 35 U.S.C. § 287.

277. Upon information and belief, Google had knowledge of the application that issued as the '000 Patent prior to its issuance and as early as its publication on June 11, 2020.

278. Google's induced infringement as described above has injured and will continue to injure DDC as long as such infringement continues.

279. DDC is entitled to recover damages adequate to compensate it for such infringement but in no event less than a reasonable royalty for Google's infringement of the '000 Patent, together with interest and costs (including any damages that may be available for a presently undeterminable period prior to issuance of the '000 Patent).

280. DDC requests that Google be determined jointly and severally liable for any and all damages awarded against Defendant OPS for direct infringement of the '000 Patent.

**COUNT XIII:**
**GOOGLE'S DIRECT INFRINGEMENT OF UNITED STATES PATENT NO. 11,093,001**

281. DDC realleges and incorporates by reference paragraphs 1-114, inclusive, as though fully set forth herein.

282. Google's offer for sale of the WWGC Member Viewers directly infringed, and continue to infringe, at least independent Claims 1 and 21 of the '001 Patent. (See DDC's initial infringement contentions and supplements thereto; see also, ECF 105 and 107, Stipulated Final Consent Judgment and Permanent Injunction).

***Claim 1***

283. The WWGC Member Viewers are apparatuses.

284. The WWGC Member Viewers comprise a housing having a portion configured to receive a mobile electronic device having a touchscreen display.

285. Said housing further includes multiple lenses.

286. The WWGC Member Viewers include an input device accessible from an exterior of the housing.

287. The WWGC Member Viewers include a contact element located within an interior of the housing, the contact element responsive to the input device and the contact element moveable within the interior of the housing between at least a first position and a second position, wherein in the second position a surface of the contact element is configured to generate a detectable touch event at the touch-screen display of the mobile electronic device.

288. The WWGC Member Viewers also infringe dependent Claims 2-5, 7-13, and 16-20 of the '001 Patent. (See DDC's initial infringement contentions and supplements thereto; see also, ECF 105 and 107, Stipulated Final Consent Judgment and Permanent Injunction).

***Claim 21***

289. The WWGC Member Viewers are apparatuses.

290. The WWGC Member Viewers comprise a housing having a portion configured to receive a mobile electronic device having a touchscreen display.

291. Said housing further includes multiple lenses.

292. The WWGC Member Viewers include an input device accessible from an exterior of the housing.

293. The WWGC Member Viewers include a contact element located within an interior of the housing, the contact element electro-mechanically coupled, via a linkage element, to the input device, the contact element moveable within the interior of the housing between at least a first position and a second position, wherein in the second position the contact element is configured to generate a touch event at the touch-screen of the mobile electronic device.

294. The WWGC Member Viewers also infringe dependent Claims 22-23 and 25-29 of the '001 Patent. (See DDC's initial infringement contentions and supplements thereto; see also, ECF 105 and 107, Stipulated Final Consent Judgment and Permanent Injunction).

295. To the extent required by law, DDC has complied with, and requires each licensee to comply with, the provisions of 35 U.S.C. § 287.

296. Upon information and belief, Google had knowledge of the application that issued as the '001 Patent prior to its issuance and as early as its publication on August 5, 2021.

297. Google's direct infringement as described above has injured and will continue to injure DDC as long as such infringement continues.

298. DDC is entitled to recover damages adequate to compensate it for such infringement but in no event less than a reasonable royalty for Google's infringement of the '001

Patent, together with interest and costs (including any damages that may be available for a presently undeterminable period prior to issuance of the '001 Patent).

**COUNT XIV:**
**OPS'S DIRECT INFRINGEMENT OF UNITED STATES PATENT NO. 11,093,001**

299. DDC realleges and incorporates by reference paragraphs 1-114, inclusive, as though fully set forth herein.

300. OPS's use, import, sale, offers for sale, and manufacture of the OPS Accused Products directly infringed, and continue to infringe, at least independent Claims 1 and 21 of the '001 Patent. (See DDC's initial infringement contentions and supplements thereto; see also, ECF 105 and 107, Stipulated Final Consent Judgment and Permanent Injunction).

***Claim 1***

301. OPS's Accused Products are apparatuses.

302. OPS's Accused Products comprise a housing having a portion configured to receive a mobile electronic device having a touchscreen display.

303. Said housing further includes multiple lenses.

304. OPS's Accused Products include an input device accessible from an exterior of the housing.

305. OPS's Accused Products include a contact element located within an interior of the housing, the contact element responsive to the input device and the contact element moveable within the interior of the housing between at least a first position and a second position, wherein in the second position a surface of the contact element is configured to generate a detectable touch event at the touch-screen display of the mobile electronic device.

306. OPS's Accused Products also infringe dependent Claims 2-5, 7-13, and 16-20 of the '001 Patent. (See DDC's initial infringement contentions and supplements thereto; see also, ECF 105 and 107, Stipulated Final Consent Judgment and Permanent Injunction).

***Claim 21***

307. OPS's Accused Products are apparatuses.

308. OPS's Accused Products comprise a housing having a portion configured to receive a mobile electronic device having a touchscreen display.

309. Said housing further includes multiple lenses.

310. OPS's Accused Products include an input device accessible from an exterior of the housing.

311. OPS's Accused Products include a contact element located within an interior of the housing, the contact element electro-mechanically coupled, via a linkage element, to the input device, the contact element moveable within the interior of the housing between at least a first position and a second position, wherein in the second position the contact element is configured to generate a touch event at the touch-screen of the mobile electronic device.

312. OPS's Accused Products also infringe dependent Claims 22-23 and 25-29 of the '001 Patent. (See DDC's initial infringement contentions and supplements thereto; see also, ECF 105 and 107, Stipulated Final Consent Judgment and Permanent Injunction).

313. To the extent required by law, DDC has complied with, and requires each licensee to comply with, the provisions of 35 U.S.C. § 287.

314. OPS's direct infringement as described above has injured and will continue to injure DDC as long as such infringement continues.

315. DDC is entitled to recover damages adequate to compensate it for such infringement but in no event less than a reasonable royalty for OPS's infringement of the '001

Patent, together with interest and costs (including any damages that may be available for a presently undeterminable period prior to issuance of the '001 Patent).

**COUNT XV:**
**GOOGLE'S INDUCED INFRINGEMENT OF UNITED STATES PATENT NO. 11,093,001**

316. DDC realleges and incorporates by reference paragraphs 1-114 and 299-315, inclusive, as though fully set forth herein. DDC further incorporates by reference paragraphs 512-596 of DDC's original Complaint (ECF 1).

317. Google induced, and continues to induce, Defendant OPS (as well as former defendants and other entities that make, sell, offer to sell, import, or use virtual reality viewers with the same or similar features) to directly infringe the '001 Patent. (See DDC's initial infringement contentions and supplements thereto; see also, ECF 105 and 107, Stipulated Final Consent Judgment and Permanent Injunction).

318. Google actively encouraged, and continues to encourage, infringement of the '001 Patent through, *inter alia*, the dissemination of its Specifications and other WWGC Program documents, wherein Google improperly identifies the GC V2 Viewer "open source" (in violation of the '001 Patent).

319. Google knew that its actions induced others – including Defendant OPS, WWGC Program members, and any entity with access to its documents published online that suggested that GC V2 Viewer specifications were "open source" – to directly infringe the '001 Patent.

320. Google's encouraging acts actually resulted in, and continue to result in, direct infringement of the '001 Patent (by Defendant OPS and other third parties).

321. To the extent required by law, DDC has complied with, and requires each licensee to comply with, the provisions of 35 U.S.C. § 287.

322. Upon information and belief, Google had knowledge of the application that issued as the '001 Patent prior to its issuance and as early as its publication on August 5, 2021.

323. Google's induced infringement as described above has injured and will continue to injure DDC as long as such infringement continues.

324. DDC is entitled to recover damages adequate to compensate it for such infringement but in no event less than a reasonable royalty for Google's infringement of the '001 Patent, together with interest and costs (including any damages that may be available for a presently undeterminable period prior to issuance of the '001 Patent).

325. DDC requests that Google be determined jointly and severally liable for any and all damages awarded against Defendant OPS for direct infringement of the '001 Patent.

**PRAYER FOR RELIEF**

WHEREFORE, Plaintiff DDC Technology, LLC respectfully requests this Court to enter judgment against Google and against OPS, jointly and severally, and against each of their subsidiaries, predecessors, successors, parents, affiliates, officers, directors, agents, servants, employees, and all persons in active concert or participation with them – granting the following relief:

A. The entry of judgment in favor of DDC and against Defendants that the Asserted Patents are valid, enforceable, and infringed by Defendants;

B. An award of damages against Defendants adequate to compensate DDC for the infringement that has occurred, but in no event less than a reasonable royalty as permitted by 35 U.S.C. § 284, together with prejudgment interest from the date the infringement began;

C. An award of treble damages against Google and OPS for its willful infringement of the Asserted Patents;

D. An award of Plaintiff's attorneys' fees against Google and OPS as provided by 35 U.S.C. § 285;

E. An injunction against Defendants prohibiting any further infringement of the Asserted Patents;

F. An accounting of all costs associated with the filing and maintenance of this action incurred by DDC; and

G. Such other relief to which DDC is entitled under the law and any other and further relief that this Court or a jury may deem just and proper.

**JURY DEMAND**

Plaintiff DDC Technology, LLC demands a trial by jury on all issues so triable.

Dated: January 30, 2023

Respectfully submitted,

*/s/ Timothy J. Haller*

Timothy J. Haller
3125265IL
HALLER LAW PLLC
230 E Delaware Pl, Ste 5E
Chicago, IL 60611
Email: haller@haller-iplaw.com
Telephone: (630) 336-4283

Gabriel I. Opatken (*Pro Hac Vice*)
NOBLE IP LLC
4151 W School St, Apt 2
Chicago, IL 60641
Email: gabriel@nobleipllc.com
Telephone: (773) 648-5433

***Attorneys for Plaintiff,***
***DDC Technology, LLC***

Of Counsel:
Steven E. Aldous
State Bar: 00982100
FORSHEY PROSTOK LLP
500 Crescent Ct, Ste 240
Dallas, TX 75201
Email: saldous@forsheyprostok.com
Telephone: (214) 716-2101

**CERTIFICATE OF SERVICE**

On February 2, 2023, I filed the foregoing document with the clerk of court for the U.S. District Court, Northern District of Texas. I hereby certify that I have served the document on all counsel and/or *pro se* parties of record by a manner authorized by Fed. R. Civ. P. 5(b)(2).

*/s/ Timothy J. Haller*
***Attorney for Plaintiff,***
***DDC Technology, LLC***