Google Cardboard (I/O 2015)

Technical Specification

July 2015, v2.0

Table of Contents

1. Introduction

2. Reference Information
    2.1. Applicable Documents

3. Design Specifications
    3.1. Lens Optical Design Specifications
        3.1.1. As-Designed Lens Optical Performance Requirements
    3.2. Cardboard Mechanical Design Specifications
        3.2.1. Corrugate Specifications
        3.2.2. Cardboard Mechanical Body Parts: "chassis", "t-shirt" and "button"
        3.2.3. Cardboard Sleeve Specifications
        3.2.4. Oleophobic Coating
    3.3. Button Specifications: Conductive Strip and Pillow
        3.3.1. Conductive Strip Specifications
        3.3.2. Conductive Pillow Specifications
    3.4. Hook and Loop Fastner Specifications
        3.4.1. Oval Hook and Loop Fastener Specifications
        3.4.2. Round Hook and Loop Fastener Specifications
    3.5. Rubber Band Specifications
    3.6. Artwork Specifications
        3.6.1. QR Viewer Profile Specifications
    3.7. Storage Environmental Conditions

4. Manufacturing & Production Verification
    4.1. Corrugate Tooling Verification
    4.2. Lens Verification
        4.2.1. Lens Tolerance Specifications
        4.2.2. Lens Visual Verification
    4.3. Assembled First Article Verification
    4.4. Additional First Article Approval Criteria
        4.4.1. Cardboard Layer Alignment
        4.4.2. Button Functionality
        4.4.3. Hook and Loop Fastener Alignment
        4.4.4. Assembly Quality

5. Change Log

DDC Technology, LLC
Exhibit 2062, page 1

1. Introduction

This document provides the detailed technical specifications for the new Google Cardboard launched at Google I/O 2015.

It includes the optical design and performance specifications, mechanical design specifications, assembly requirements, and first article verification suggestions.

If you have any questions or comments about this technical specification, contact us at wwgc@google.com.

2. Reference Information

2.1. Applicable Documents

All documents in the table below are located in the "Google Cardboard I/O 2015 Technical Drawings" subdirectory of the manufacturer's kit.

Number	Document	File name(-s)
2.1.1	Viewer body technical drawings	Viewer - Body.{dxf, pdf}
2.1.2	Sleeve technical drawings	Viewer - Sleeve.{dxf, pdf}
2.1.3	Viewer body and sleeve artwork assets	Viewer - Artwork.{ai, pdf}
2.1.4	Button conductive strip technical drawings	Button - Conductive Strip.{dxf, pdf}
2.1.5	Button conductive pillow technical drawings	Button - Conductive Pillow.pdf
2.1.6	Oval hook and loop fastener technical drawings	Hook and Loop - Oval.{dxf, pdf}
2.1.7	Round hook and loop fastener technical drawings	Hook and Loop - Round.pdf
2.1.8	Lens technical drawings	Lens.{pdf, stp}

Table 1. Reference documents list.

DDC Technology, LLC
Exhibit 2062, page 4

3. Design Specifications

This section provides the technical design specifications of Google Cardboard (I/O 2015 edition). It contains the detailed specifications for all major functional parts of Google Cardboard, including lenses, capacitive button, mechanical body, sleeve, oleophobic coating and printed artwork.

3.1. Lens Optical Design Specifications

Google Cardboard (I/O 2015 edition) contains custom designed, 80° FOV, 34 mm diameter lenses.

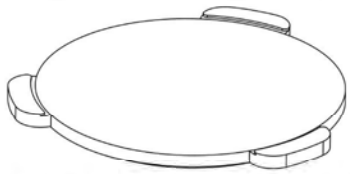

Figure 1: Google Cardboard (I/O 2015 edition) lenses.

The detailed parameters, tolerances and performance requirements of these lenses are given below. For lens optical prescriptions and technical drawings, see the documents 2.1.8.

Parameters	Value	Unit	Comments
Designed FOV	80	°	Circular total field of view
Nyquist frequency	8.7	lp/mm	Based on Nexus 5 screen resolution (1920 x 1080 px), pixel pitch 57.6 um
Display cover glass thickness	1.4	mm	n_d=1.5, v = 55
Design wavelength	550	nm	+/- 25 nm (equal weighting)
Pupil diameter	15	mm	Also known as the "eyebox"
Eye relief	18	mm	From the designed eye pupil to lens surface vertex
Nominal virtual image distance	-667	mm	
Lens diameter	34	mm	
Lens edge thickness	1.5	mm	At 34 mm diameter
Lens material	PMMA		n_d=1.492, v = 57.4
Tab to screen distance	39.07	mm	From the tab surface (facing display) to the front surface of display coverglass

Table 2. Lens design optical parameters.

DDC Technology, LLC
Exhibit 2062, page 5

3.1.1. As-Designed Lens Optical Performance Requirements

Parameters	Value	Unit
Min on-axis MTF @ Nyquist Frequency, with evaluation pupil centered	60	%
Min MTF @ Nyquist Frequency within +/-25° FOV with 4 mm diameter evaluation pupil	20	%

Table 3. As-designed minimum MTF specification at nominal operating conditions.

3.2. Cardboard Mechanical Design Specifications

Google Cardboard (I/O 2015) mechanical body consists of three distinct parts: chassis, t-shirt and button. Each of these parts is made from the corrugated cardboard.

3.2.1. Corrugate Specifications

Parameters	Value	Tolerance	Unit	Comments
Thickness	1.7	+/-0.1	mm	E-flute

Table 4. Corrugate specifications.

3.2.2. Cardboard Mechanical Body Parts: "chassis", "t-shirt" and "button"

See the documents 2.1.1 for detailed Cardboard mechanical part drawings.

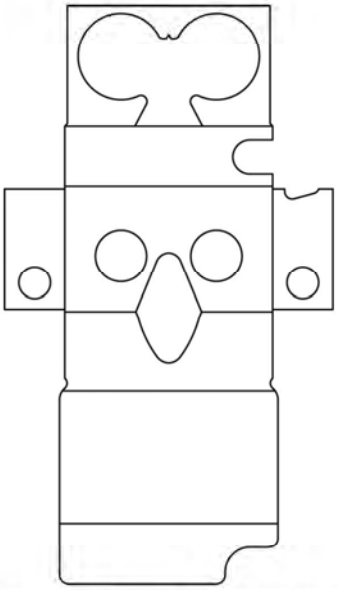

Figure 2. Cardboard mechanical body: "chassis" part.

DDC Technology, LLC
Exhibit 2062, page 6

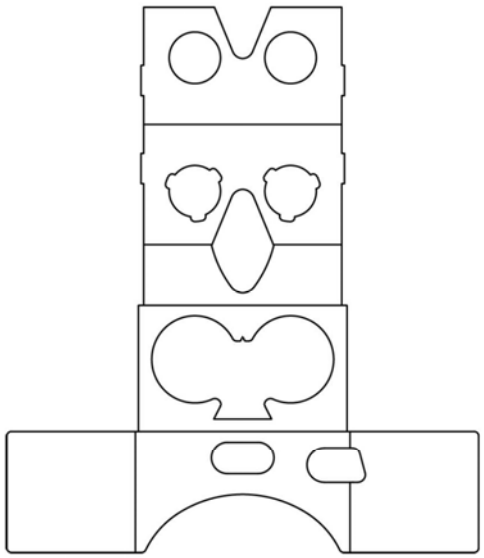

Figure 3. Cardboard mechanical body: "t-shirt" part.

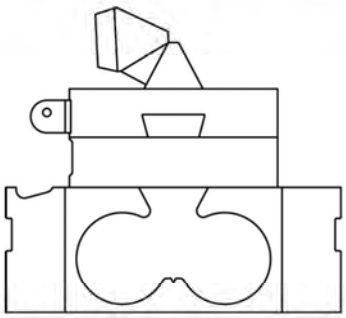

Figure 4. Cardboard mechanical body: "button" part.

3.2.3. Cardboard Sleeve Specifications

Google Cardboard is delivered to the users inserted into a sleeve (see figure 5), with the side flaps folder over.

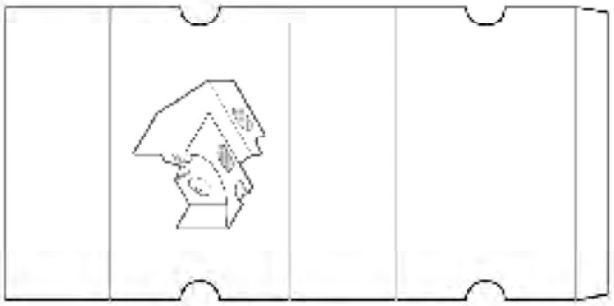

Figure 5: Cardboard sleeve.

See the table below for sleeve specifications. For the sleeve technical drawings, refer to document 2.1.2. For the sleeve artwork, refer to the document 2.1.3.

Parameters	Value	Tolerance	Unit
Gauge thickness	18	+/- 2	mil (1/1000")
Gauge thickness	0.4572	+/- 0.05	mm
Paper density	337	+/- 10	g/m^2
Material	Kraft bending chip		

Table 5. Cardboard sleeve specifications.

3.2.4. Oleophobic Coating

The oleophobic coating should provide water and grease resistance. It should be skin safe and compliant with the food contact regulations. The coating should be applied on the user-facing part of viewer's chassis (see figure below). For best performance, it should be applied via a rod coater, not via flexo press.

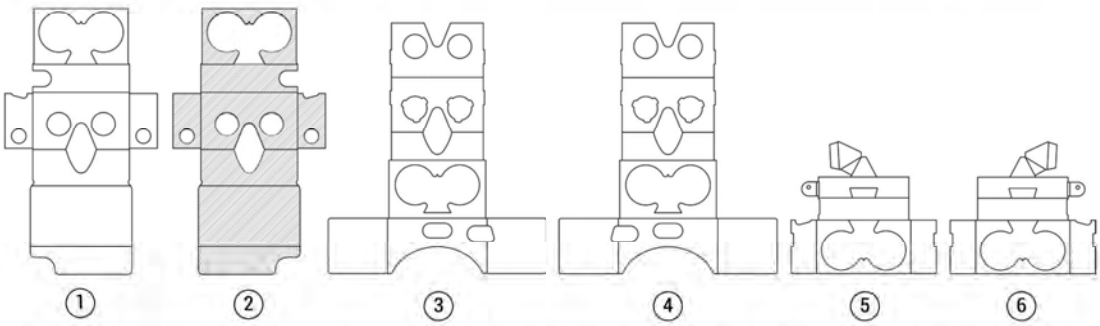

Figure 6: oleophobic coating area on the user-facing side of the Cardboard chassis, as indicated by the drawing above (number 2, shaded diagonally).

3.3. Button Specifications: Conductive Strip and Pillow

Google Cardboard (I/O 2015) button consists of two conductive parts ("pillow" and "strip"), glued to a cardboard-based "hammer".

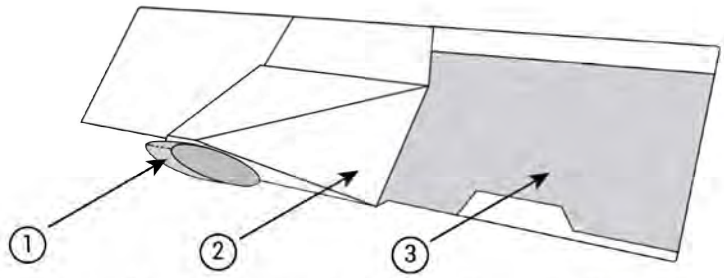

Figure 7. Cardboard button parts: (1) - "pillow", (2) - "hammer", (3) - "conductive strip"

3.3.1. Conductive Strip Specifications

Parameters	Value	Unit
Material	Metallized fabric (polyester Ni/Cu)	
Surface resistivity	< 0.03	Ω/sq.
Z-axis resistance	< 0.03	Ω

Table 6. Conductive strip specifications.

3.3.2. Conductive Pillow Specifications

Parameters	Value	Unit
Surface material	Metallized fabric (polyester Ni/Cu)	
Core material	Soft urethane foam	
Core surface resistivity	< 0.07	Ω/sq.
PSA type	Conductive	
PSA Z-axis resistance	< 0.05	Ω

Table 7. Conductive pillow specifications.

3.4. Hook and Loop Fastner Specifications

Google Cardboard uses two round hook-and-loop fastners for the side flaps, and an oval hook-and-loop fastner for the top flap.

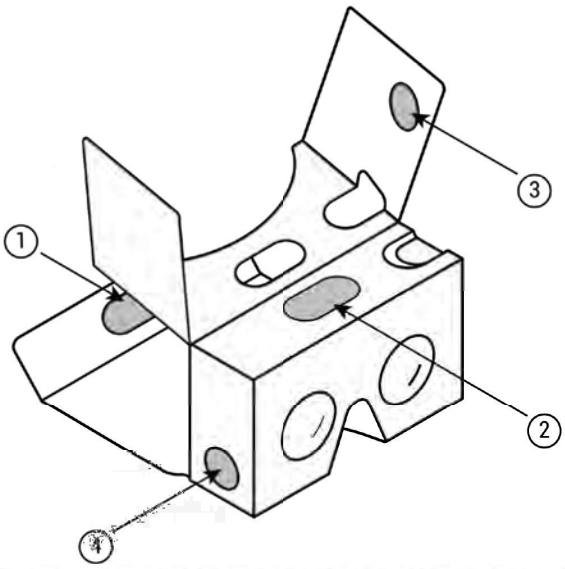

Figure 8. Hook-and-loop fasteners as used in Google Cardboard: (1) - oval "loop" fastener, (2) - oval "hook" fastener,, (3) - round "loop" fastener, (4) - round "hook" fastener

3.4.1. Oval Hook and Loop Fastener Specifications

See the document 2.1.6 for technical oval hook and loop fastner drawings.

Parameters	Value	Unit
Material	Woven nylon	
PSA type	Acrylic-based adhesive	
Color	Black	

Table 8. Oval hook and loop fastener specifications.

3.4.2. Round Hook and Loop Fastener Specifications

See the document 2.1.7 for technical round hook and loop fastener drawings.

Parameters	Value	Tolerance	Unit
Material	Woven nylon		
Diameter	19.25	+/- 0.25	mm
PSA type	Acrylic-based adhesive		
Color	Black		

Table 9. Round hook and loop fastener specifications.

3.5. Rubber Band Specifications

The back flap part of a Google Cardboard contains a rubber band. The rubber band increases the friction between the phone's bottom surface and the back flap, thereby reducing the chance of the phone's slippage as illustrated below.

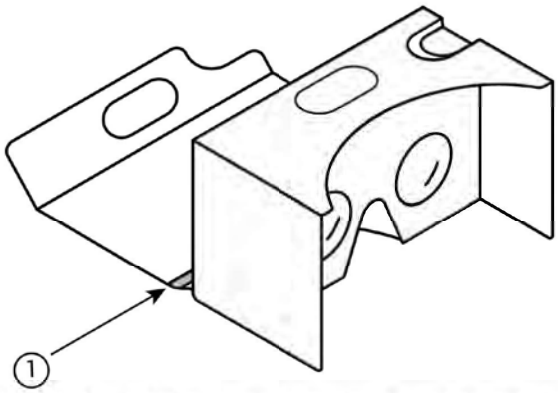

Figure 9. (1) - rubber band location on Google Cardboard

Parameters	Value	Unit
Dimensions	76.2 x 6.35 x 1	mm

Table 10. Rubber band specifications.

3.6. Artwork Specifications

Google Cardboard contains three printed pieces of artwork: an isometric viewer diagram placed on the sleeve, the isometric assembly instructions placed on the back flap of the chassis and the QR viewer profile placed on the chassis bottom as illustrated in Figure 8.

For the high-resolution versions of this artwork, see the document 2.1.3.

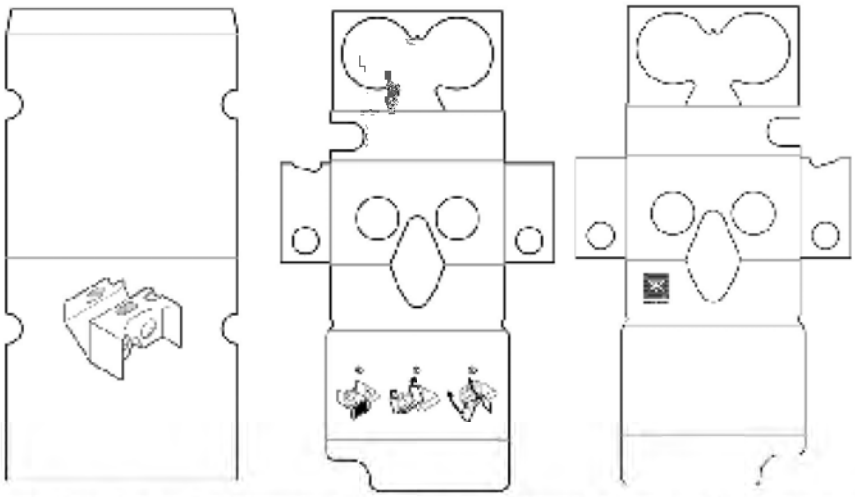

Figure 10. Cardboard artwork placement: left - an isometric viewer diagram on the sleeve, center - the assembly instructions on the chassis, right - QR viewer profile.

3.6.1. QR Viewer Profile Specifications

A QR viewer profile encodes the viewer parameters and ensures that all apps written using the Cardboard SDKs work well on that viewer. Google Cardboard (I/O 2015 edition) uses the following viewer parameters.

Parameters	**Value**	**Unit**
Primary button type	Indirect touch	
Screen to lens distance	39.3	mm
Inter-lens distance	63.9	mm
Screen vertical alignment	Bottom	
Tray to lens-center distance	35	mm
k_1 distortion coefficient	0.33582564	
k_2 distortion coefficient	0.55348791	

Table 11: Google Cardboard viewer profile specifications.

To ensure that all apps in the Google Cardboard app ecosystem work on your Google Cardboard-inspired device, create a QR viewer profile using the Viewer Profile Generator.

DDC Technology, LLC
Exhibit 2062, page 12

Figure 11. Typical output of the the Viewer Profile Generator.

Users will be prompted to scan this profile upon installing Google Cardboard apps for Android and iOS, so this QR profile should be clearly placed on the device. The recommended place for the profile is on the viewer itself, but you should also include it on the viewer's packaging, and/or on its website. You can find the detailed guidelines for sizing, spacing and other details of the generated QR profile in the Viewer Profile and Badge Guidelines.

3.7. Storage Environmental Conditions

All components in Google Cardboard must be rated to meet the following storage conditions that may be present during shipment in cargo planes, sea shipping containers and so on.

Parameters	Minimum	Maximum	Unit
Temperature	-30	50	°C

Table 12. Storage environmental conditions.

DDC Technology, LLC
Exhibit 2062, page 13

4. Manufacturing & Production Verification

This section contains the guidelines for verifying the production and manufacturing processes of Google Cardboard. It outlines the tooling and lens verification criteria, first article inspection criteria, critical tolerances and so on.

4.1. Corrugate Tooling Verification

The following critical dimensions should be verified for the corrugate tooling (e.g. die-cuts) before proceeding to production. For critical dimension illustrations (A, B, C) in Table 12 see the figures below.

Parameters	Value	Unit	Note
Distance between two fold lines defining the thickness of Cardboard chassis	40 (+/-0.5)	mm	A, C
Distance between the centers of lens holders (IPD)	64 (+/-0.5)	mm	B

Table 13: Corrugate tooling verification specifications.

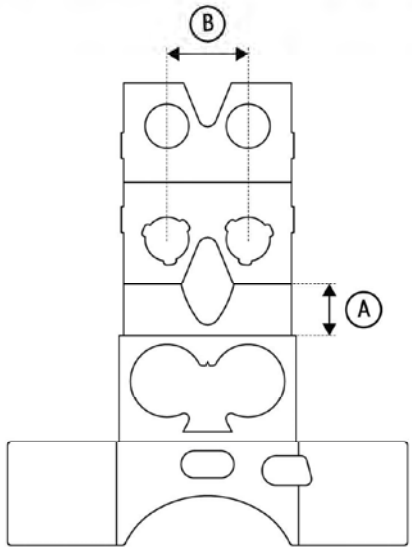

Figure 12. Critical "A" and "B" dimensions on the Cardboard "t-shirt" part

DDC Technology, LLC
Exhibit 2062, page 14

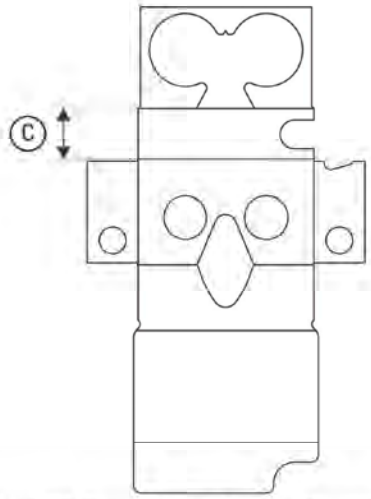

Figure 13. Critical "C" dimension on the Cardboard "chassis" part

4.2. Lens Verification

The following tolerances should be respected for Google Cardboard (I/O 2015) lenses.

4.2.1. Lens Tolerance Specifications

Inspection item	Tolerance	Unit
Center thickness	8.794 +/- 0.1	mm
Lens diameter including tabs	40.0 +/- 0.1	mm
Lens diameter without tabs	34.0 +/- 0.1	mm
Lens tab thickness	1.65 +/- 0.1	mm
R1 surface form (figure error)	< 10	um
R2 surface form (figure error)	< 10	um
R1 surface roughness (angstroms RMS)	< 0.05	um
R2 surface roughness (angstroms RMS)	< 0.05	um
Surface decenter	< 20	um
Surface tilt	< 5	arcmin
Surface quality (scratch/dig)	160 / 50	

Table 14: Lens tolerance specifications.

4.2.2. Lens Visual Verification

After receiving the lens first articles and verifying that the tolerances from the table above are respected, perform the following visual lens quality checks for any surface distortions, blurry areas, blemishes, etc. Common lens surface problems arising from manufacturing process issues like

incorrect cooling/cycle times can be detected by "sliding" the lens over a high-contrast straight line and visually inspecting for any distortions.

The figures below illustrates two examples.

Figure 14. First example of lens visual verification: left - good lens, right - bad lens (notice the wavy distortions of the straight line on the lens surface).

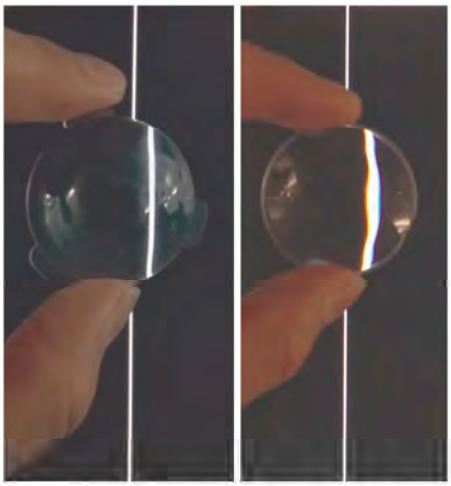

Figure 15. Second example of lens visual verification: left - good lens, right - bad lens (notice the wavy distortions of the straight line on the lens surface).

4.3. Assembled First Article Verification

The following distances are critically important for the final, assembled units. Inspect the first articles of the fully assembled viewers to ensure that these tolerances are respected.

Parameters	Value	Tolerance	Unit	

DDC Technology, LLC
Exhibit 2062, page 16

Distance from the back surface to the screen (see picture below)	37.3	+2/-0.5	mm	D
Distance between the centers of lens holders	64	+/-0.5	mm	B

Table 15: Finished assembly tolerance specifications.

Figure 16. Distance between the back surface to screen (distance D in table 13).

4.4. Additional First Article Approval Criteria

After verifying that the critical tolerances in Table 13 hold for the first articles, ensure that the criteria described below hold for the assembled units.

4.4.1. Cardboard Layer Alignment

1. All layers of cardboard lens cutouts should line up and the outlines should have <1 x E-flute thickness of misalignment. Lens tabs should not be visible.

2. Button side flaps should have <0.5 x E-flute thickness misalignment, as it's critical for the button travel distance. If the units are assembled manually, the button side flaps should be aligned first.

3. The bottom seam of the cardboard (next to the rubber band) should not have a gap of more than 1 x E-flute thickness. Very importantly, that gap should be even across the seam and should not be tilted/wedged.
4. Layers with phone-facing apertures should be securely glued together.

4.4.2. Button Functionality

1. Various parts of the "hammer" should not come unglued. This can happen when the assembly stage takes too long and the glue dries up, or from not applying sufficient amounts

of glue.

2. The button should be easily pushable down. After releasing it should spring back.
3. The conductive pillow should be centered within the phone-facing apertures, and the bottom edge of the conductive pillow should be lined up with the corresponding cardboard edge.

4.4.3. Hook and Loop Fastener Alignment

1. All 6 hook and loop fastener pieces should be present and should be >95% aligned.

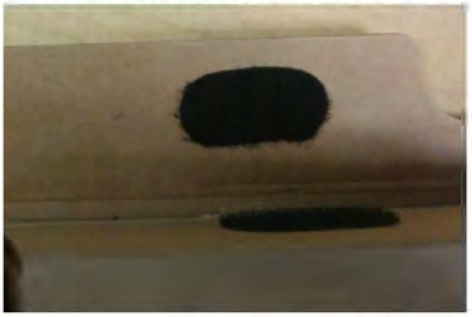

2. Upon closing and re-opening the hook and loop fasteners, the PSA should not start peeling off from the cardboard.

4.4.4. Assembly Quality

1. There should be no exposed glue or tape showing from the cardboard edges.

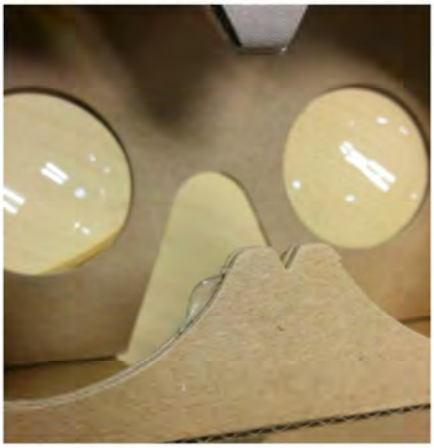

2. The viewer should not have any false scores.

3. The lenses should be free of contamination, such as glue, fastener loop/hook pieces, cardboard chips or other debris.

5. Change Log

Version	Date	Change description
1.1	2/08/2018	Updated name of material generic term "hook and loop fastener"
1.0	7/30/2015	Initial technical specification for Google Cardboard (I/O 2015).

Table 16. Change log.

DDC Technology, LLC
Exhibit 2062, page 21