UNITED STATES PATENT AND TRADEMARK OFFICE

BEFORE THE PATENT TRIAL AND APPEAL BOARD

GOOGLE LLC,

Petitioner,

v.

DDC TECHNOLOGY, LLC,

Patent Owner.

IPR2023-00707

U.S. Patent 9,420,075

PATENT OWNER'S DEMONSTRATIVE EXHIBITS FOR ORAL ARGUMENT

Pursuant to 37 C.F.R. § 42.70(b), Patent Owner DDC Technology, LLC submits the following demonstrative exhibits for use at the oral argument scheduled for August 7, 2024.

Dated: August 5, 2024

Respectfully submitted,

/Cortney S. Alexander/

Cortney S. Alexander
Reg. No. 54,778
Kent & Risley LLC
5755 N Point Pkwy, Ste 57
Alpharetta, GA 30022
(404) 855-3867
(770) 462-3299 (fax)
cortneyalexander@kentrisley.com

Google LLC v. DDC Technology, LLC

IPR2023-00707 (U.S. Patent No. 9,420,075)
IPR2023-00708 (U.S. Patent No. 9,811,184)
IPR2023-00709 (U.S. Patent No. 10,528,199)
IPR2023-00711 (U.S. Patent No. 11,093,001)

Patent Owner's Demonstrative Exhibits

Google LLC v. DDC Technology, LLC

IPR2023-00707 (U.S. Patent No. 9,420,075)
IPR2023-00708 (U.S. Patent No. 9,811,184)
IPR2023-00709 (U.S. Patent No. 10,528,199)
IPR2023-00711 (U.S. Patent No. 11,093,001)

Patrick Buckley's Development of the Claimed Inventions

7/28/14: Google employee Clay Bavor responds

Subject: Re: DODOcase Cardboard Viewer Update

Date: Monday, July 28, 2014 at 20:14:16 Central Daylight Time

From: Clay Bavor [redacted]

To: Alex Kauffmann [redacted]

CC: Andrew Nartker [redacted], Patrick Buckley <patrick@dodocase.com>, craig dalton <craig@dodocase.com>

That button is genius.

Clay

EX2034, 1; -00707 POR, 101.

Background of the art

Hasbro My3D (March 2011)

Durovis Dive (November 2013)

EX2054, ¶¶13, 16; -00707 POR, 97-98.

6/25/2014: Google's magnetic input

20. On June 25, 2014, Google launched a VR viewer known as Google Cardboard V1 ("GCV1 Viewer") at its 2014 I/O Conference.

22. Google's purported improvement involved a *magnetic switch* to interact with the magnetometer/compass of a smartphone to *simulate* a touch event (an inferior design that worked unreliably on a small number of mobile devices).

EX2033, ¶¶20, 22; -00707 POR, 99.

Patrick Buckley's improved input mechanism

28. During manufacture and assembly of the first commercially available GCV1 Viewer, I immediately recognized flaws in Google's design and set out to improve on the GCV1 Viewer by adding a capacitive/conductive touch button.

EX2033, ¶8; -00707 POR, 100.

7/10/2014: Mr. Buckley writes to Google about his design

On Thu, Jul 10, 2014 at 10:07 PM, Patrick Buckley <patrick@dodocase.com> wrote:

> Hi Andrew and Clay,
>
> I just wanted to give you a quick update on this past week. Lots of great stuff is happening hear at DODOcase.
>
> - I noticed for the double tap trigger in the #cardboard app it pops open the top and bottom nav bars but using the magnetic trigger it does not. Anychance you guys are going to make both magnetic and double tap behave the same way? I think we have a clever/elegant way to make a conductive tap button which has a couple advantages...
>
> - Eliminates a potential choking hazard for children. I spoke to children toy safety lab and thye said if you ever wanted to market or give these to children under 12 the design would have to change.
> - Could work universally on all smartphones, versus only working on ones with hall sensors.
> - It could help make this a better holiday gift product by eliminating child safety concerns.

EX2034, 3-4; -00707 POR, 100; -00707 POSR, 27.

7/11/2014: Google responds

On Fri, Jul 11, 2014 at 2:23 PM, Andrew Nartker [redacted] wrote:

> Hi Patrick, Craig,
>
> I shared this with the team, and they're all really excited with your progress
>
> [redacted]
>
> * **Conductive button**: Agree this could have benefits. We experimented briefly with this but didn't fully refine. Alex, one of our lead designers, has offered to visit DodoCase next week to share our tips here. Are you free next Weds afternoon/end of day? I'll try to join him as well if I can.

EX2034, 3; -00707 POR, 100.

7/16/2014: Mr. Buckley files provisional application

2. On July 16, 2014, I filed the first provisional patent application (to which the Challenged Patents claim priority) *before* meeting with Google representatives (including Andrew Nartker) to discuss my inventions (while under then-existing non-disclosure agreements between Google and DODOcase).

EX2033, ¶2; -00707 POSR, 23.

7/25/14: Google receives videos of Mr. Buckley's prototype

EX2060; EX2054, ¶11; -00707 POR, 101.

7/26/14: Google employee Andrew Nartker responds

On Sat, Jul 26, 2014 at 5:19 PM, Andrew Nartker [redacted] wrote:

> (+Alex)
>
> Hi Patrick,
>
> That button looks really neat! Thanks for sharing. [redacted]

EX2034, 1; -00707 POR, 101.

7/28/14: Google employee Alex Kaufmann responds

On Mon, Jul 28, 2014 at 10:39 AM, Alex Kauffmann <captainalex@google.com> wrote:

> Hey guys,
>
> That's an ingenious button! Does it work consistently on a variety of phones? I'd love to play with it.

EX2034, 1; -00707 POR, 101.

7/28/14: Google employee Clay Bavor responds

Subject: Re: DODOcase Cardboard Viewer Update

Date: Monday, July 28, 2014 at 20:14:16 Central Daylight Time

From: Clay Bavor [redacted]

To: Alex Kauffmann [redacted]

CC: Andrew Nartker [redacted], Patrick Buckley <patrick@dodocase.com>, craig dalton <craig@dodocase.com>

That button is genius.

Clay

EX2034, 1; -00707 POR, 101.

9/17/14: DODOcase launches its V1.2 Viewer

7. On or around September 17, 2014, DODOcase launched its own V1.2 VR Viewer, which included a capacitive/conductive touch button rather than Google's magnet switch (making it distinct from Google's original design).

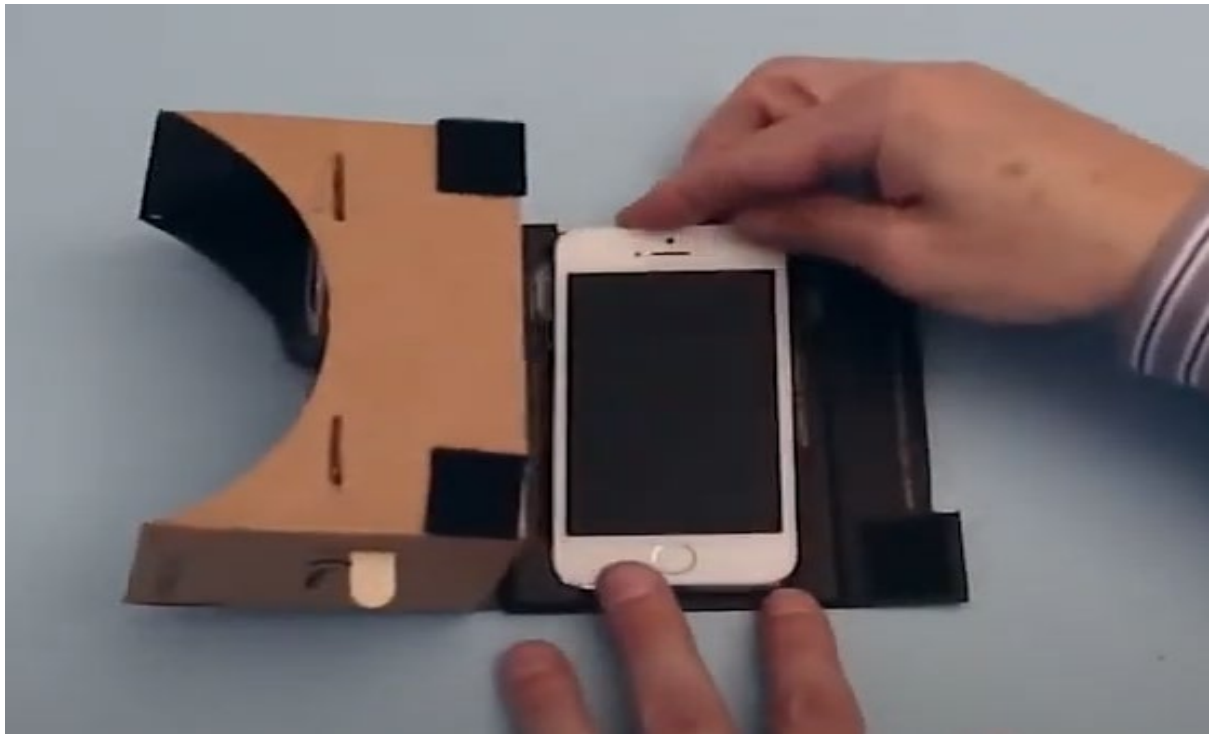

EX2033, ¶7;
-00707 POR, 102.

DODOcase's V1.2 Viewer

-00707 POR, 59, 62.

Sales of DODOcase's V1.2 Viewer

33. In October of 2014, Regan Arts published a book titled Beginner's Guide to Virtual Reality, which was packaged with the V1.2 Viewer, resulting in 50,000 units shipped to customers across the United States. My present recollection is that these V1.2 Viewers were identified as "Patent Pending."

EX2033, ¶33; -00707 POR 102.

Sales of DODOcase's V1.2 Viewer

	Product	Product Revenue	% Product Revenue
1.	Virtual Reality Cardboard Toolkit	$216,815.20	11.38%
2.	Customizer DODOcase for iPad Air 2	$181,084.45	9.51%
3.	Charging Stand for Apple Watch - Walnut	$149,896.00	7.87%
4.	Customizer DODOcase for iPad Air	$146,806.95	7.71%
5.	Customizer DODOcase for iPad Mini 1/2/3	$107,839.25	5.66%
6.	Customizer DODOcase for iPad 2/3/4	$99,317.25	5.21%
7.	Charging Stand for Apple Watch	$68,798.00	3.61%
8.	Virtual Reality Cardboard Toolkit - V1.2	$67,639.45	3.55%

EX2054, ¶18; EX2055;
-00707 POR 102.

The parties' unsuccessful negotiations

11. DODOcase and MerchSource entered into a License Term Sheet on July 20, 2016, and then a Master License Agreement on October 3, 2016.

12. Around the same time, Google sought a license from DODOcase, but the parties could not reach agreement on terms, including Google's insistence that a license benefit all of its WWGC members.

EX2033, ¶12; -00707 POPR 30.

The effect of unauthorized sellers on DODOcase

36. While DODOcase experienced initial success with its V1.2 Viewer in 2014 and 2015, it was forced to abandon the production and sale of its V1.2 Viewer that embodied the inventions claimed in the Asserted Patents in 2016 due to severe price pressures resulting from a saturated market of unauthorized sellers.

EX2033, ¶36; -00707 POPR 53.

Google LLC v. DDC Technology, LLC

IPR2023-00707 (U.S. Patent No. 9,420,075)
IPR2023-00708 (U.S. Patent No. 9,811,184)
IPR2023-00709 (U.S. Patent No. 10,528,199)
IPR2023-00711 (U.S. Patent No. 11,093,001)

Definition of a POSA

Petitioner's definition of a POSA

26. Based upon my knowledge and experience in this field and my review of the '075 patent and the prior art, I believe that a POSA at the time of the alleged invention was a person having a minimum of an undergraduate degree (or equivalent) in mechanical engineering or a related field, with knowledge of mechanical actuation systems, basic optical design with lenses, head-mounted displays, a basic understanding of touchscreen technology, and at least two years of experience of professional work experience in mechanical and basic optical design or engineering. At the time of the alleged invention, I was such a person and continue to be. I have also supervised and worked with many such people

EX1002, ¶26; -00707 POR, 2.

PO's Expert: "Basic understanding" is insufficient

20. Petitioner's proposed definition falls short in that "a basic understanding of touchscreen technology" would be insufficient to understand the difference between the '075 patent and the art that Petitioner relies on in its petition. Nor would a person having only a basic understanding of touchscreen technology understand the issues involved in determining whether a POSA would have been motivated to combine references in the manner Petitioner proposes.

EX2050, ¶20; -00707 POR, 3.

PO's Expert: "Basic understanding" is insufficient

21. The insufficiency of Petitioner's definition of a POSA is further highlighted by apparent misunderstandings Petitioner has regarding touchscreen technology. For example, Petitioner's expert states that capacitive touchscreens "use the electrical properties of the body to create a change of charge at a location on a polymer coated touchscreen." Ex. 1002 at ¶ 31. While a capacitive touchscreen *may* rely on electrical properties of the human body, as the '075 patent discloses (discussed further below regarding claims 7 and 8), it is not *necessary* for a capacitive touchscreen to rely on the human body to induce touch events. Further, the majority of touchscreens used in 2014-era smartphones are glass, not polymer or "polymer coated."

EX2050, ¶21; -00707 POR, 3.

PO's Expert: "Basic understanding" is insufficient

23. Similarly, Petitioner and its expert propose that the prior art references would be combined based on the desire to reach more users, including those with "resistive touchscreen" devices. A POSA would quickly recognize the inaccuracy of that position given the extensive differences in the two technologies and the limited use of resistive touchscreen devices in personal mobile electronic devices. Further, the poor optical properties of resistive touchscreens would render them a poor choice for use in a virtual reality headset.

EX2050, ¶23; -00707 POR, 3-4

PO's definition of a POSA

25. Therefore, a POSA would have a minimum of two years of experience in implementing touchscreen and optics technology, along with relevant education (e.g., a bachelor's degree) in science or engineering. In addition to specific academic training, a POSA may draw upon appropriate industry experience.

EX2050, ¶25; -00707 POR, 4.

PO's expert

5. I am a retired engineer and researcher with over twenty years of experience in the consumer electronics industry developing electronic displays, touch sensors, human interfaces, and biometric devices. Approximately 70 U.S. patents have been issued for my inventions and hundreds more have been prosecuted with my input. From 2001 to 2017, I was employed by Synaptics, where I led development of touchscreens and launched the "ClearPad" transparent touchscreen product line in 2002. In 2006 we provided the touchscreen for the world's first all-touchscreen smartphone, the LG Prada. A year later, Apple launched the iPhone, bringing touchscreen interfaces to the mass markets. While at Synaptics, we supplied billions of capacitive touchscreens and touch-displays to all of the major smartphone suppliers. Twenty-seven of the patents listed in Appendix A are for innovations in capacitive touch sensing. After retiring from the consumer electronics industry in 2017, I have consulted on intellectual property strategy, invention harvesting, and patent prosecution.

EX2050, ¶5; -00707 POSR, 9.

Petitioner's expert

12 Q Are you familiar with the term projected
13 capacitive touchscreen?
14 MR. KIKLIS: Objection. Scope.
15 THE WITNESS: It is not coming to me now.
16 BY MR. ALEXANDER:
17 Q Are you able to explain the differences in how
18 a projected capacitive touchscreen works versus a
19 surface capacitive touchscreen?

21 THE WITNESS: I have not looked into what
22 a projected capacitive touchscreen is, nor specifically
23 looked into -- what did you call that -- to whatever the
24 other term is, basically. I would not be able to define
25 the difference between them currently, if there if there

EX2053, 49:12-50:1; -00707 POR, 18.

Google LLC v. DDC Technology, LLC

IPR2023-00707 (U.S. Patent No. 9,420,075)
IPR2023-00708 (U.S. Patent No. 9,811,184)
IPR2023-00709 (U.S. Patent No. 10,528,199)
IPR2023-00711 (U.S. Patent No. 11,093,001)

Kondo’s Touch Panel 1506

Petitioner's reliance on Kondo's touch panel 1506

1. **Claim 1(a): A virtual reality viewer for use with a mobile electronic device having a touch-screen, the viewer comprising:**

Figures 1 and 2 of Kondo below show a VR viewer 2 that encloses a smartphone 1500 with a touch-screen display 1506. The term virtual reality viewer

-00707 Petition, 43; -00707 POSR, 8.

Petitioner's reliance on Kondo's touch panel 1506

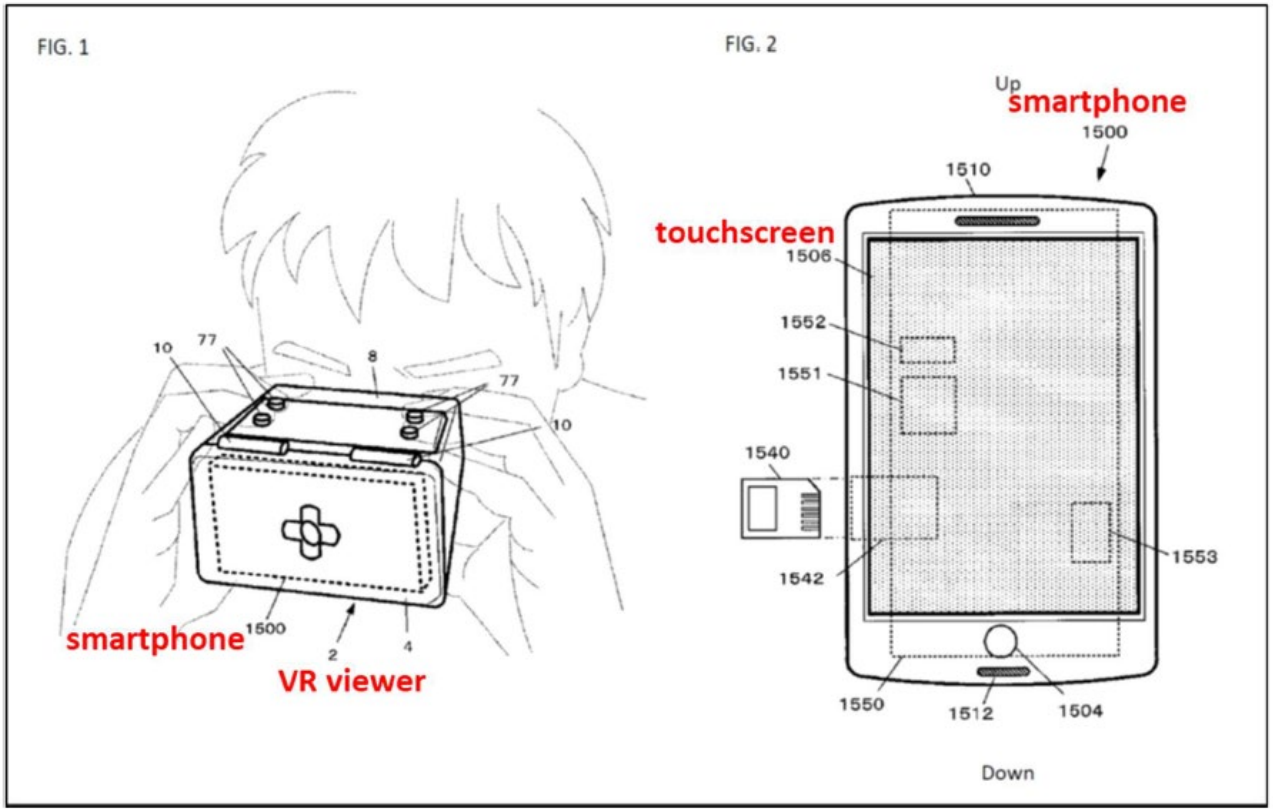

-00707 Petition, 44; -00707 POSR, 8.

PO's Expert on Kondo's touch panel 1506

59. Kondo is describing a surface-capacitive touchscreen, *not* a projected-capacitive touchscreen. A POSA in the field of touchscreens at the time of the '075 patent would be aware of these two distinct types of capacitive touchscreens, and would recognize Kondo's description of the technology as a surface-capacitive touchscreen. The POSA would get further verification of the touchscreen

EX2050, ¶59; -00707 POR, 18.

Kondo's current-based method of touch detection

In ¶0024, Kondo describes how a capacitive touchscreen works, as follows:

> The user touching the panel causes the human body (contact object) to act as the impedance imparting body (capacitor or the like capacitance). While in-phase and same-potential alternating currents are applied to the four corners of the touch panel 1506, when a finger or the like touches the touch panel 1506, the current changes in accordance with the impedance of the human body. Furthermore, the contact coordinates in the coordinate system of the touch panel 1506 can be calculated from the ratio of the currents detected at the four corners.

EX1003, ¶0024.

57. This is an accurate description of how a surface-capacitive touchscreen works. An appropriate reference can be found in the 55-page "Touch

EX2050, ¶56-57; EX1003, ¶0024; -00707 POR, 17-18; -00707 POSR, 11-12.

Kondo's current-based method of touch detection

58. In addition, Kondo refers to this current-based method of touch-location detection in ¶0048, as follows: "Therefore, the touch panel 1506 can detect a current value corresponding to this impedance and recognize that a touch operation has been performed at the virtual button positions W31 to W34." This is different from the touch-location method used in a projected-capacitive touchscreen, which is based on detecting a change in the mutual capacitance between multiple drive and sense (X-Y) electrodes. (The same Wiley textbook

EX2050, ¶58; EX1003, ¶0048; -00707 POR, 18; -00707 POSR, 12.

Petitioner's expert on Kondo ¶0024

9 Q Great. Could you turn to paragraph 24,
10 please?

6 Q Do you believe that accurately describes how
7 projected capacitive touchscreens in mobile devices
8 operate?

11 A What was your question? It's not fully
12 accurate.
13 Q Okay. Can you describe any inaccuracies,
14 please?

15 A It's -- I find it strange, "to act as an
16 impedance imparting body." It's a charge imparting
17 body, as we know. And let's see, where else? Which,
18 understandably, because it even says capacitor, and so
19 that's a charge, so letting out, intaking. It is weird
20 that it mentions alternating currents unless you happen
21 to be -- have electric field near you that is an
22 alternating current, because normally it's an AC
23 differential, but it could be. Yeah.

EX2053, 144:9-145:23; -00707 POR, 18.

Petitioner's expert on Kondo ¶0048

14 Q Okay. Appreciate that answer. Do I
15 understand that you're -- you don't know if this
16 accurately describes the operation of a projected
17 capacitive touchscreen?
18 MR. KIKLIS: Objection. Scope. Asked
19 and answered.
20 THE WITNESS: Again, as I mentioned, the
21 terminology that you're using of projected capacitive, I
22 don't have a definition here, but general capacitive
23 touchscreens, does this sentence describe that
24 perfectly? Not perfectly.

1 Q Okay. What would be the imperfection in the
2 description?
3 MR. KIKLIS: Objection. Scope.
4 THE WITNESS: Capacitive touchscreens are
5 working from a voltage difference, typically. That does
6 not mean that there's --
7 MR. ALEXANDER: (Indiscernible -
8 simultaneous speech) -- I'm sorry. You can finish your
9 answer.
10 THE WITNESS: That does not mean that
11 there's other methods that I'm not familiar with. But
12 typically they're going by the different potentials,
13 potential voltage of the -- well, of the apparatus and
14 person.

EX2053, 60:14-61:14; -00707 POR, 18.

Kondo's concern about static electricity

touchscreen. The POSA would get further verification of the touchscreen technology used in Kondo's patent from Kondo's emphasis on the need for protection against static electricity, which is unique to surface-capacitive touchscreens (projected-capacitive touchscreens do not have this issue). This emphasis includes the following references:

EX2050, ¶59; -00707 POR, 18; -00707 POSR, 13.

Kondo's concern about static electricity

- ¶0036: "The holding side ground circuit part 48 is a *static electricity* diffusion film attached to the inner surface of the recessed part 43, of which the tip end extends to the mating surface between the holding part 4 and the attachment main body 8. As long as the device holding plate 44 is secured to the cover part 42, the holding side ground circuit part 48 abuts on the outer surface of the device holding plate 44 and removes *static electricity* from the main body of the smartphone 1500 via the device holding plate 44."

EX2050, ¶59; EX1003, ¶0036; -00707 POR, 19; -00707 POSR, 13.

Kondo's attempt to provide a reference ground

61. Yet another indication that Kondo is designing his remote touch circuit around a surface-capacitive touchscreen can be found in his attempt to provide a reference ground for the user. Kondo describes a "ground circuit 80" (¶0038, illustrated in Figure 10, below) that in total is made up of the following parts (highlighted in yellow in Figure 10):

EX2050, ¶61; -00707 POR, 20.

Kondo's attempt to provide a reference ground

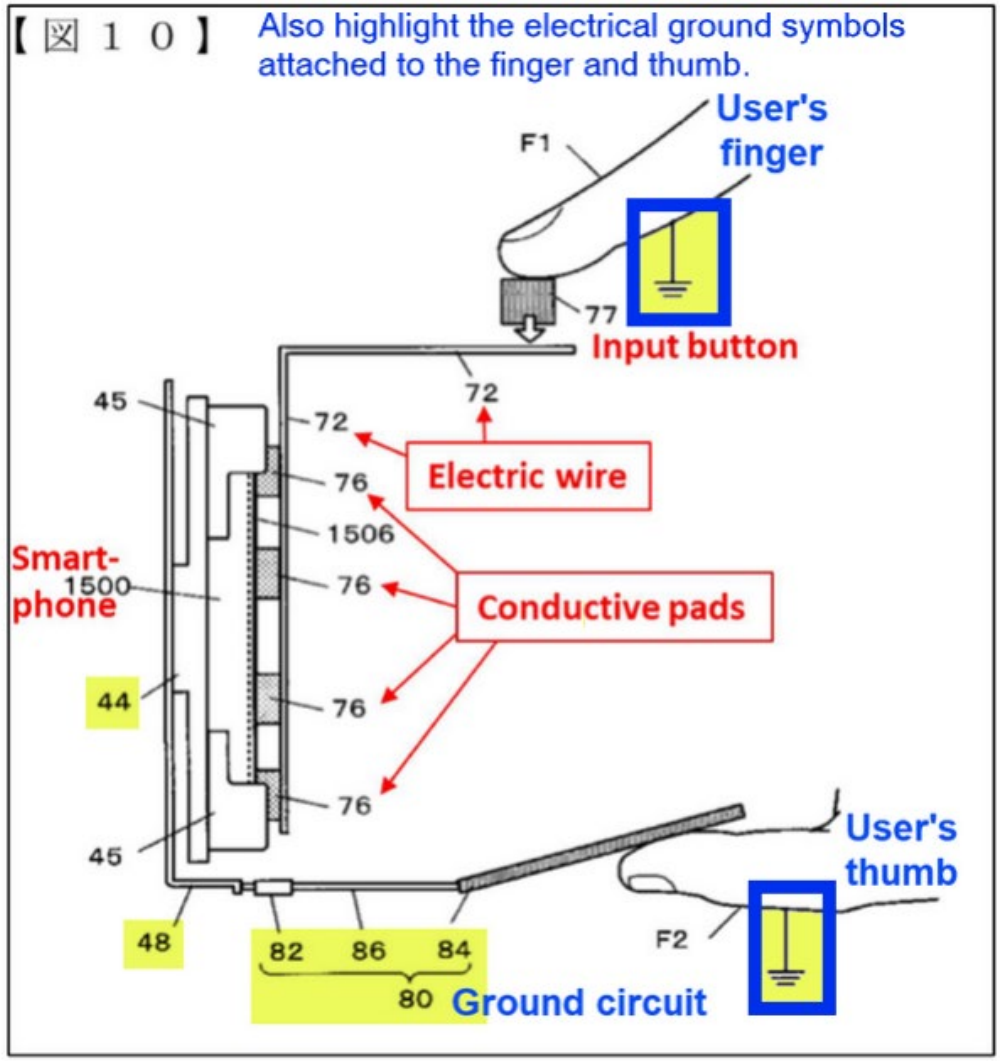

EX2050, ¶61; EX1003, Fig. 10; -00707 POR, 21.

Kondo's attempt to provide a reference ground

63. One of the unique characteristics of a surface-capacitive touchscreen that differentiates it from projected-capacitive is its use of a low-impedance signal return path through the user's finger back to the surface capacitive touchscreen's signal reference. That signal reference is commonly called "reference ground" or "ground," though it need not be a truly low-resistance connection to the earth. A stable reference ground is critically important in a surface-capacitive touchscreen because it establishes the baseline reference current for the "no-touch" condition.

EX2050, ¶63; -00707 POR, 22.

Kondo's attempt to provide a reference ground

ground, not some generalized earth ground or "rest-of-the-world" ground. This is a very different situation than in a projected-capacitive touchscreen, where the non-active electrodes provide a reference level for capacitive measurement of the active electrodes. No "reference ground" is needed in a projected-capacitive touchscreen.

EX2050, ¶63; -00707 POR, 23.

Google LLC v. DDC Technology, LLC

IPR2023-00707 (U.S. Patent No. 9,420,075)
IPR2023-00708 (U.S. Patent No. 9,811,184)
IPR2023-00709 (U.S. Patent No. 10,528,199)
IPR2023-00711 (U.S. Patent No. 11,093,001)

No Motivation to Combine Kondo & Chu (All Claims in Dispute)

PO's expert

65. A POSA at the time of the '075 patent would know with certainty that it was not possible to integrate a surface-capacitive touchscreen into a mobile consumer-electronics device such as a smartphone. All smartphones capable of providing display capability sufficient for use in a VR viewer at that time used projected-capacitive touchscreens. A POSA at that time who was considering combining Kondo's and Chu's patents would therefore be faced with combining designs created for two different and incompatible touchscreen technologies. This would significantly increase the difficulty and decrease the likelihood of the combination being achieved.

EX2050, ¶65; -00707 POR, 23.

PO's expert

68. Moreover, it would not be clear to a POSA that Kondo's design would work with a surface-capacitive touchscreen because the total impedance between the human-touchable button and the conductive pad that touches the touchscreen may be so high that insufficient capacitive coupling from the user is provided to register as a touch. Since surface-capacitive technology is typically used in ATMs, ticketing machines, kiosks, point-of-sale terminals, arcade games, and factory automation applications (all devices that are designed for a user to directly contact the screen with exactly one finger or stylus), there was no demand for *remote-touch* capability for surface-capacitive screens. A POSA would not have been

EX2050, ¶68; -00707 POR, 24.

PO's expert

motivated to utilize Kondo's surface-capacitive touch panel 1506 as the mobile device recited in the challenged claims of the '075 patent. The inability of surface-capacitive touchscreens to identify and report two touch events makes them unsuitable for use in multi-touch user interfaces. Practically all smartphones in 2014 were based on multi-touch user interfaces (*e.g.*, those utilizing projected-capacitive touchscreens). A POSA would not have been motivated to utilize Kondo's surface-capacitive touch panel 1506 as the mobile device recited in the challenged claims of the '075 patent.

EX2050, ¶68; -00707 POR, 25.

PO's expert

70. Petitioner asserts that a POSA would have been motivated to modify Kondo to use Chu's input mechanism so that it would work with resistive touchscreens. However, Kondo makes no mention of resistive touchscreens, and a POSA would also have known that, at the time of the invention of the '075 patent, resistive touchscreens comprised little, if any, market share. In 2013 only 3.5% of mobile phones used resistive touchscreens and by 2015 none did. Ex. 2046.[3]

EX2050, ¶70; -00707 POR, 26.

PO's expert

71. What few resistive touchscreens were available on the market were used on low-cost mobile devices that would not have had the graphic processing power or display resolution that was necessary for a mobile device to be used with a VR headset, further evincing the complete lack of motivation to combine. Indeed,

73. A further reason for avoiding the use of resistive touchscreens is their poor optical properties. A resistive touchscreen has an air gap between two

74. Resistive touchscreens, like surface-capacitive touchscreens, are designed to process a single input location. They are not able to process multi-touch gestures. Starting in 2007 (and continuing to present), multi-touch capability has been a requirement for use in smartphones, particularly those using the Apple

EX2050, ¶¶71, 73, 74;
-00707 POR, 27-29.

Google LLC v. DDC Technology, LLC

IPR2023-00707 (U.S. Patent No. 9,420,075)

Claim 18 of USP 9,420,075

Claim 18 and Google Cardboard V2

an input device including,

a first portion that is accessible from an exterior of the housing, and

an elongate second portion disposed within the interior of the housing between the left and right regions wherein the second portion is generally oriented in a vertical direction that is perpendicular to the horizontal direction;

an electric shield,

wherein a first surface of the electric shield is disposed on the first portion and is electrically coupled to a second surface of the electric shield,

wherein the second surface is disposed on the second portion within the interior and is generally centered in the horizontal direction between the left and right regions, and wherein only the second surface

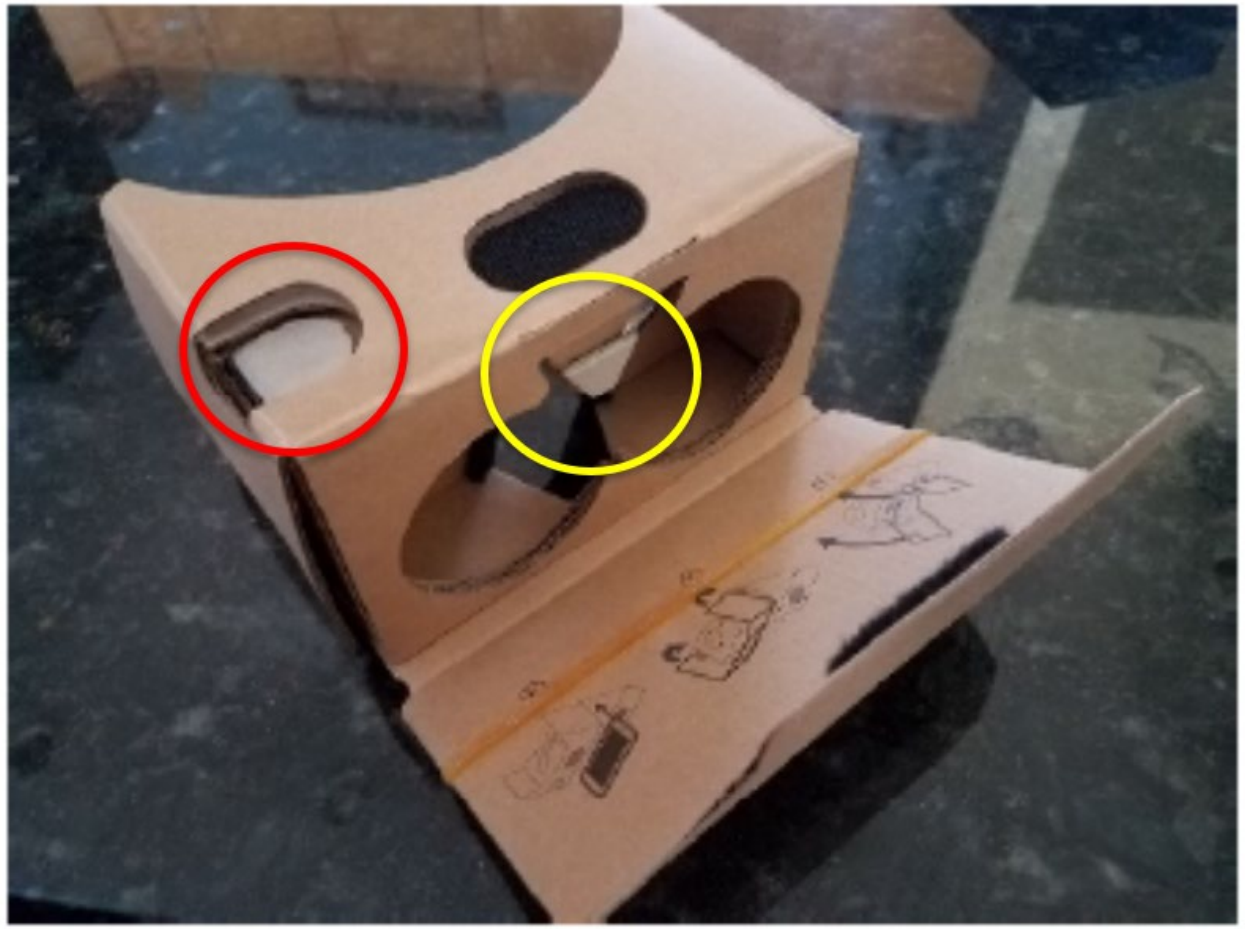

EX1001, 14:43-57; -00707 POSR, 20-21.

PO's expert: No inconsistency in claim language

118. The '075 patent describes an embodiment consistent with this claim language, in which the electric shield not only contacts the touchscreen but also includes an exposed portion disposed on the user input that the user touches when actuating the input: "In addition or alternatively, the portion of the metallized film[5] that is configured to touch the screen can be accessible to receiving a user touch. For instance, a portion of the metallized film can be exposed on the lever **722** or otherwise accessible to the user on an external surface." EX1001, 10:67-11:4.

EX2050, ¶118; -00707 POR, 48.

Petitioner's claim interpretation depends on flawed analysis

122. Petitioner relies on its expert's flawed analysis to argue that the phrase "disposed on" should be rewritten "to include an indirect connection." EX1002, ¶160. Petitioner does not argue that this is the ordinary meaning of the phrase "disposed on." Its only justification for this interpretation is that it is "[t]he only way it could possibly make sense." *Id.* For the reasons discussed above, claim 18 is not internally inconsistent, so Petitioner's interpretation is unnecessary and should be rejected.

EX2050, ¶122; -00707 POR, 50.

Google LLC v. DDC Technology, LLC

IPR2023-00707 (U.S. Patent No. 9,420,075)

Claim 7 of USP 9,420,075

Claim 7 – Claim Construction

Claim Language	PO's Proposed Construction
7. The virtual reality viewer of claim 6, wherein the surface of the electrical shield is sized to have electrical properties that are sufficient to be detected by the touch-screen based on capacitance when the input mechanism is in the extended position and only the portion of the surface is contacting the touch-screen.	The electrical shield is "sized to have electrical properties that are sufficient to be detected by the touch-screen based on capacitance when the input mechanism is in the extended position and only the portion of the surface is contacting the touch-screen, without relying on the electrical properties of other components or the human body"

EX2050, ¶32; -00707 POR, 8.

Specification's two embodiments

In some implementations, the electric shield is configured (e.g., sized and/or positioned) so as to have capacitive properties sufficient to be detected by a capacitive touch-screen when the input mechanism is in the extended position and in the absence of human contact with the electric shield. However, it can also be appreciated that, in some implementations, the electric shield can be electrically coupled to the portion of the input mechanism that is interacted with by the user such that electrical properties of the user's body can be utilized to induce the touch input.

EX1001, 7:52-61; -00707 POR, 5, 6.

Petitioner's expert

11 Q Okay. And the first variation described in
12 the first sentence doesn't utilize the electrical
13 properties in the user's body to induce a touch input,
14 correct?
15 A As it states, if it is configured -- in other
16 words, sized large enough or positioned in a location as
17 to have capacitive properties sufficient to be detected
18 by this capacitive touchscreen, that it may work as an
19 input device.
20 Q Without relying on the properties of the
21 user's body, correct?
22 A As it states there.

EX2053, 87:11-22; -00707 POR, 6.

Specification

Moreover, the exemplary viewer and user input assembly can be configured to allow a user to interact with the touch sensitive screen without reliance on the electrical properties of the human body to induce the electrical event. For instance, the metallized film **725** can be sized such that it is suitable for inducing a touch event without requiring user contact therewith. In addition or alternatively, the portion of the metallized

EX1001, 10:61-67; -00707 POR, 8.

PO's expert

40. Accordingly, a POSA reading claim 7 in the context of the specification would understand that the electric shield of claim 7 must be sized to have electrical properties that are sufficient to be detected by the touch-screen based on capacitance when the input mechanism is in the extended position and only the portion of the surface is contacting the touch-screen, without relying on the electrical properties of other components or the human body.

EX2050, ¶40; -00707 POR, 8.

Petitioner’s combination relies on human’s electrical properties

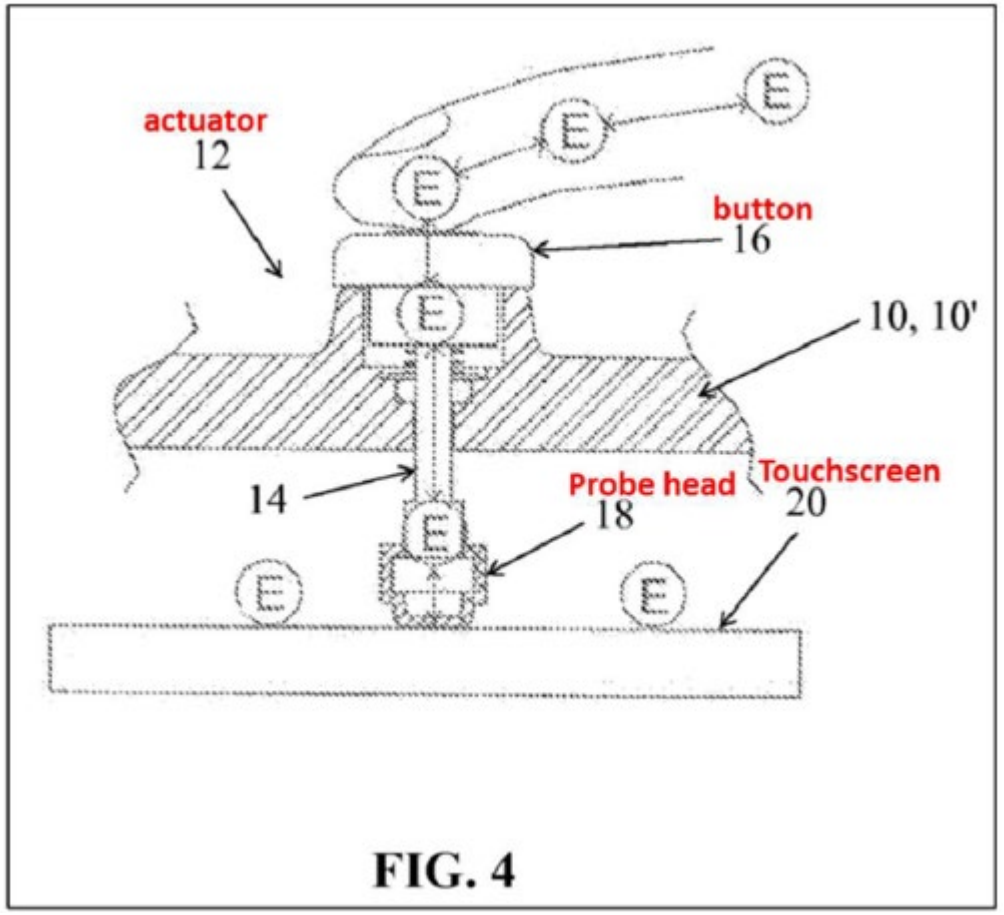

FIG. 4

EX1004, Fig. 4; -00707 POR, 33.

Google LLC v. DDC Technology, LLC

IPR2023-00707 (U.S. Patent No. 9,420,075)

Claim 8 of USP 9,420,075

Claim 7 – Claim Construction

Claim Language	PO's Proposed Construction
8. The virtual reality viewer of claim 6, wherein the surface of the electric shield is sized to have sufficient capacitive properties such that contact between only the portion of the surface and the touch-screen can be detected by a capacitive touch-screen when the input mechanism is in the extended position and in the absence of human contact with the electric shield.	The electrical shield is "sized to have sufficient capacitive properties such that contact between only the portion of the surface and the touch-screen can be detected by a capacitive touch-screen when the input mechanism is in the extended position, without relying on the electrical properties of other components or the human body"

EX2050, ¶32; -00707 POR, 11.

PO's expert

42. Like claim 7, this claim is directed to the first embodiment disclosed in the specification in which the electric shield is sufficiently configured such that it does not rely on the electrical properties of the user's body to induce a touch event. That conclusion is separately driven by each of the following recitations of claim 8: (1) "the surface of the electric shield is sized to have sufficient capacitive properties such that contact between only the portion of the surface and the touch-screen can be detected by a capacitive touch-screen when the input mechanism is in the extended position"; and (2) "in the absence of human contact with the electric shield."

EX2050, ¶42; -00707 POR, 9.

PO's expert

42. Like claim 7, this claim is directed to the first embodiment disclosed in the specification in which the electric shield is sufficiently configured such that it does not rely on the electrical properties of the user's body to induce a touch event. That conclusion is separately driven by each of the following recitations of claim 8: (1) "the surface of the electric shield is sized to have sufficient capacitive properties such that contact between only the portion of the surface and the touch-screen can be detected by a capacitive touch-screen when the input mechanism is in the extended position"; and (2) "in the absence of human contact with the electric shield."

43. The first of these limitations indicates that the electric shield must be sized such that its own capacitive properties are sufficient to induce a touch event. A POSA would understand that this means that the electric shield need not rely on the electric properties of the user's body or another capacitive device to induce a touch event. As discussed regarding claim 7, the specification confirms that understanding. In two passages, the specification uses language similar to claim 8

PO's expert

EX2050, ¶¶42-43; -00707 POR, 9.

PO's expert

44. The second limitation of claim 8 only reinforces that conclusion. A POSA would understand that the language "in the absence of human contact with the electric shield," in this context, indicates that electrical coupling between the human user and the electric shield is not required. As discussed regarding claim 7, the specification confirms that understanding by contrasting the first embodiment, in which the electric shield does not rely on the physical properties of the human to induce a touch event, and the second embodiment, in which it does rely on the physical properties of the human.

EX2050, ¶44; -00707 POR, 10.

PO's expert

45. Petitioner's interpretation of this claim as merely requiring that a human not have *direct physical* contact with the electric shield is illogical. As discussed above, the point of the embodiment to which this claim is directed is that the electrical shield **need not rely on the electrical properties of the human body** to induce a touch event. An electrical shield that relies on the human body (whether through direct or indirect physical contact) would not be sufficiently configured to induce a touch event and therefore would not satisfy the requirements of claim 8.

EX2050, ¶45; -00707 POR, 10-11.

PO's expert on Petitioner's alternative argument

90. In any case, the use of Kondo's capacitive element would not satisfy the recitations of claim 8. Claim 8 requires that "the surface of the electric shield is sized to have sufficient capacitive properties such that contact between only the portion of the surface and the touch-screen can be detected by a capacitive touch-screen when the input mechanism is in the extended position." The reason for Kondo's alternative embodiment using the capacitive element is that Kondo does not disclose an electrical shield having sufficient capacitive properties to induce a touch event in the absence of a human. Kondo's primary embodiment relies on the electrical properties of the human body. Its alternative embodiment relies on the capacitive element in place of the human body. In neither case does Kondo disclose that its touch pad 76, which Petitioner calls an electrical shield (Petition at 85), is sufficient to induce a touch event. If it were, then the capacitive element would not be necessary. Thus, the introduction of Kondo's capacitive element into

EX2050, ¶90;
-00707 POR, 35.

Google LLC v. DDC Technology, LLC

IPR2023-00707 (U.S. Patent No. 9,420,075)

Claim 10 of USP 9,420,075

Chu's Fig. 4

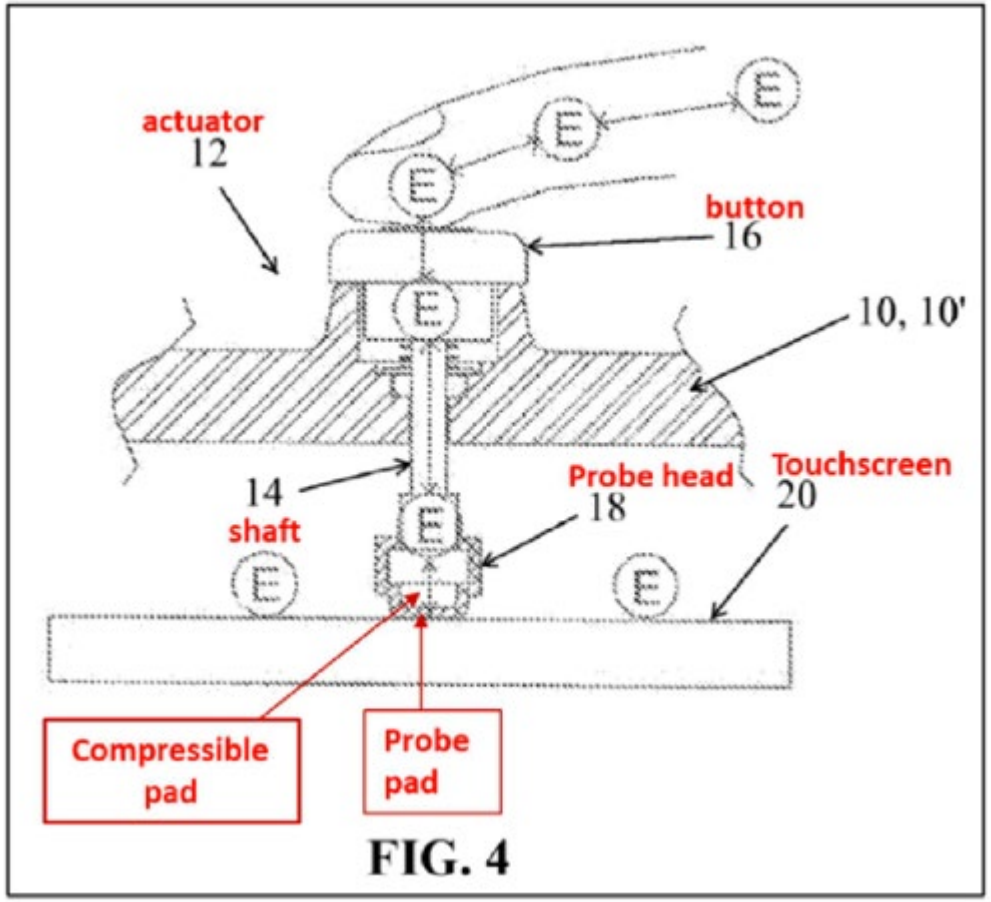

FIG. 4

EX1004, Fig. 4; EX2050, ¶100; -00707 POR, 36, 38-39.

100. Rather, a POSA would understand that what Chu intended to convey is that the probe pad 30 is electrically coupled to the button 16, such that when a user touches button 16, the electrical properties of the user's body may induce a touch event. And a POSA would understand that no conductive padding behind probe pad 30 is required for such electrical coupling between probe pad 30 and button 16. Chu describes Fig. 4 in this way:

> FIG. 4 shows the actuator mechanism **12** at an actuation position when the press button **16** is pushed downwards/inwards by a finger of a user, and the probe head **18** is touching the capacitive touch screen **20**. At this actuation position, electric charge E can be transferred between the finger of the user and the capacitive touch screen **20** through the press button **16**, the actuator shaft **14** and the probe head **18**, as shown by the arrows.

EX1004, ¶0041. This passage indicates that the arrows are intended to show electrical coupling between the touchscreen 20 through the probe head 18 to the actuator shaft 14 to the button 16 to the user's finger.

Chu's Fig. 5

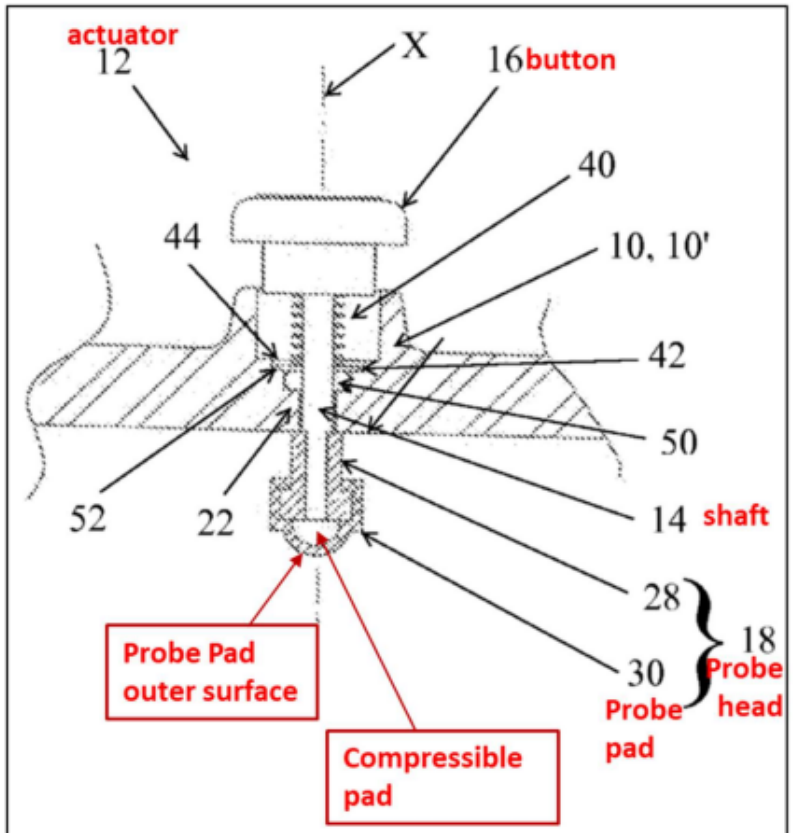

FIG. 5

threads formed on the inner end of the actuator shaft 14." Chu discloses that the press button, the shaft, and the probe head (including the sleeve) may be made of metal. EX1004, ¶0014. It also teaches that probe pad 30 may be made of "soft material such as rubber," and that "[a]dditive may be added to the rubber in order to enhance its electric charge transfer performance." EX1004, ¶0049. A POSA would understand that this would permit electrical coupling between the touchscreen and the user's finger without the need for additional padding in the white space. Thus, based on Chu's description of Fig. 4 in ¶0041, a POSA would understand that electric field is coupled from the touchscreen to probe pad 30, to sleeve 28 (part of probe head 18, as shown in Fig. 5), to shaft 14, to button 16, and to the user. Thus, contrary to Petitioner's suggestion (*see* EX1002, ¶138), a POSA

EX1004, Fig. 5; EX1002, ¶137; EX2050, ¶101; -00707 POR, 39-40.

PO's expert

97. Second, nothing in Chu would indicate that there is separate padding in the empty space behind probe pad 30. Chu's figures do not label this area. Nor does Chu's specification indicate that there is padding or anything else in this white space. Thus, a POSA would understand that this space is empty. A POSA would find this consistent with the state of the art at the relevant time. Chu's probe pad 30 is very similar to the rubber tips found on passive styluses, such as the one pictured below made by CoAsia in Taiwan in around 2012. Such styluses did not have padding underneath the rubber tip, and a POSA would not expect Chu's similar probe pad to include padding either.

EX2050, ¶97; -00707 POR, 37.

PO's expert on Petitioner's alternative argument

rubber tip). Adding additional conductive padding would actually make it harder to deform the probe pad, leading to an undesirable user experience. Thus, it is unsurprising that Chu makes no mention of a need for more cushioning effect. Chu's deformable probe pad would provide sufficient cushioning.

conductive rubber above the contact area. Adding more conductive rubber above the probe pad would actually have two negative effects. First, it would likely decrease the amount of deformation undergone by the probe pad. This would decrease the conductive area seen by the touchscreen, which would in turn decrease the reliability of the touch event. Second, it would increase the total electrical resistance between the probe pad and the human's finger, potentially decreasing the "electric charge transfer performance" (Ex. 1004, ¶0049). This would also decrease the reliability of the touch event. Due to these potentially

EX2050, ¶103; -00707 POR, 41.

Google LLC v. DDC Technology, LLC

IPR2023-00707 (U.S. Patent No. 9,420,075)

Claims 12 and 20 of USP 9,420,075

Flexible linkage (claims 12 and 20)

12. The virtual reality viewer of claim **1**, wherein the input mechanism includes a lever and a flexible linkage coupled to the housing, wherein the flexible linkage is configured to deform when the lever is actuated and thereby guide at least the portion of the surface between the first position and the extended position.

20. A virtual reality viewer for use with a mobile electronic device having a touch-screen, the viewer comprising:

a flexible linkage coupled to the lever and the housing, wherein the linkage is configured to deform in response to actuation of the lever and thereby guide the portion of the surface between the first position and the extended position, and

EX1001, 13:52-55, 15:10-29; -00707 POR, 42, 54.

Chu's biasing member

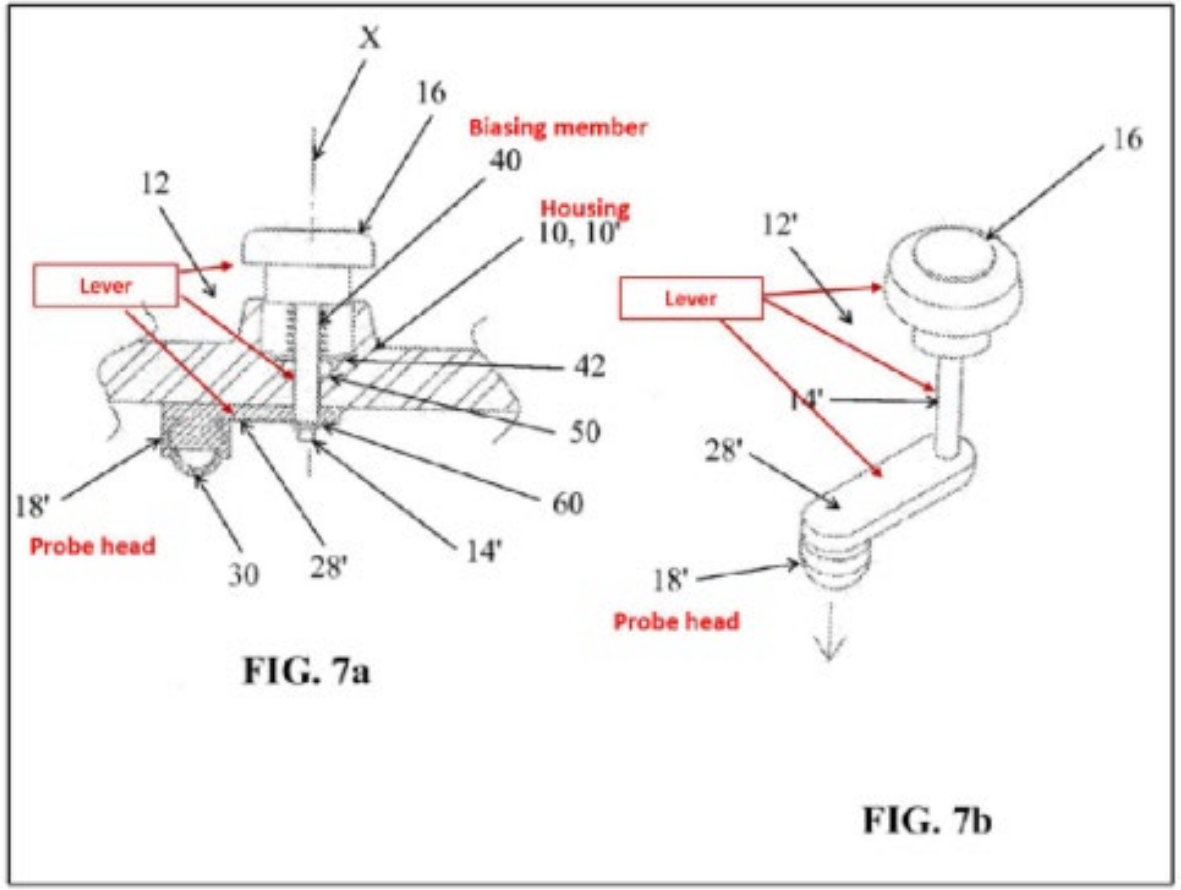

110. Moreover, the biasing member 40 does not "guide at least the portion of the surface [of the electric shield] between the first position and the extended position." Biasing member 40 does not guide Chu's probe pad 30 (which Petitioner treats as the electric shield) between a first position and an extended position. It actually does the opposite, resisting movement of the probe pad 30 to the extended position. Petitioner's assertion to the contrary is unsupported and conflicts with Chu's figures and description, as evident from Petitioner's annotated version of Chu's Figures 7A and 7B:

EX1004, Figs. 7A & 7B; EX2050, ¶110; -00707 POR, 44.

Claim Construction: Lever (claims 12 and 20)

Claim Language	PO's Proposed Construction
Lever	a stiff body pivoted on a fulcrum

EX2050, ¶32; -00707 POR, 17.

Oxford Dictionary of Mechanical Engineering

lever A stiff rod or beam pivoted about a fulcrum with a load at some point along the lever being moved by a force (effort) at a third point. There are three classes of lever defined according to the relative positions of the effort, fulcrum, and load. For class 1, the effort and the load are on opposite sides of the fulcrum (as in a pair of pliers); for class 2, effort and load are on the same side of the fulcrum with the effort further away (as in a wheelbarrow); class 3 is like class 2, but with the load further away (as with tweezers). Classes 1 and 2 provide a mechanical advantage, but class 3 does not.

EX2051; -00707 POR, 12-13.

American Heritage Dictionary of the English Language

Also called "leveling staff," "leveling pole."

Lev·el·ler (lĕv′ə-lər) *n.* A member of an English radical political movement active in the 1640's that advocated universal male suffrage, parliamentary democracy, and religious tolerance.

Le·ven, Loch (lē′vən). A lake occupying eight square miles in east-central Scotland.

le·ver (lĕv′ər, lē′vər) *n.* **1.** A simple **machine** *(see)* consisting of a rigid body, typically a metal bar, pivoted on a fixed fulcrum. **2.** A projecting handle used to adjust or operate a mechanism. **3.** A means of accomplishment. —*tr.v.* **levered, -vering, -vers.** To move or lift with a lever. [Middle English *lever, levour,* from Old French *levier, leveor,* from *lever,* to raise, from Latin *levāre,* from *levis,* light. See **legwh-** in Appendix.*]

le·ver·age (lĕv′ər-ĭj, lē′vər-) *n.* **1.** The action of a lever. **2.** The mechanical advantage of a lever. **3.** Positional advantage; power to act effectively.

lev·er·et (lĕv′ər-ĭt) *n.* A young hare, especially one less than a year old. [Middle English, from Norman French *leveret,* diminutive of *levre,* variant of Old French *lievre,* hare, from Latin *lepus* (stem *lepor-*). See **leporine.**]

Le·ver·ku·sen (lā′vər-kōō′zən). A city of West Germany, in southwestern North Rhine-Westphalia. Population, 103,000.

Le·ver·rier (lə-vĕ-ryā′), **Urbain Jean Joseph.** 1811–1877. French astronomer.

Le·vi[1] (lē′vī′). A son of Jacob and Leah. Genesis 29:34. [Hebrew, "joining."]

Le·vi[2] (lē′vī′) *n.* A tribe of Israel descended from Levi.

lev·i·a·ble (lĕv′ē-ə-bəl) *adj.* Liable to be levied or levied on.

yes/z zebra, size/zh vision/ə about, item, edible, gallop, circus/ cot. loch/N *Fr.* bon. ***Follows main vocabulary.** †**Of obscure origin.**

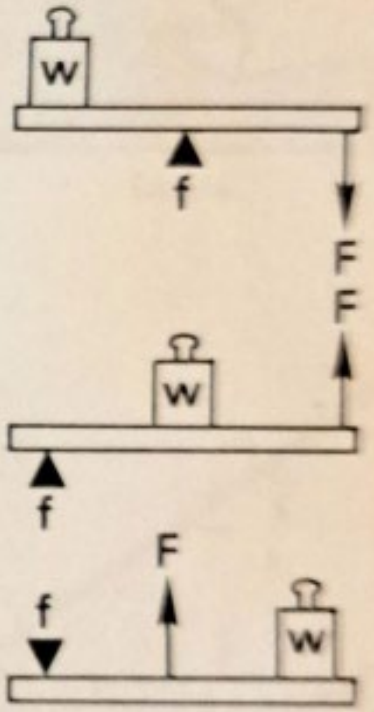

lever
Three basic types of lever; f is the fulcrum and F is the force needed to raise a weight W

EX2050, ¶52; EX2052; -00707 POR, 16.

Random House Webster's College Dictionary

lev•er (lev′ər, lē′vər), *n.* **1.** a rigid bar that pivots about one point and that is used to move an object at a second point by a force applied at a third. **2.** a means or agency of persuading or of achieving an end. —*v.t.* **3.** to move or lift with or as if with a lever. —*v.i.* **4.** to use a lever. [1250–1300; ME *levere, levour* for **lever* < AF; OF *levier* = *lev(er)* to lift (< L *levāre* to lighten, lift) + *-ier* -IER[2]]

levers (def. 1)

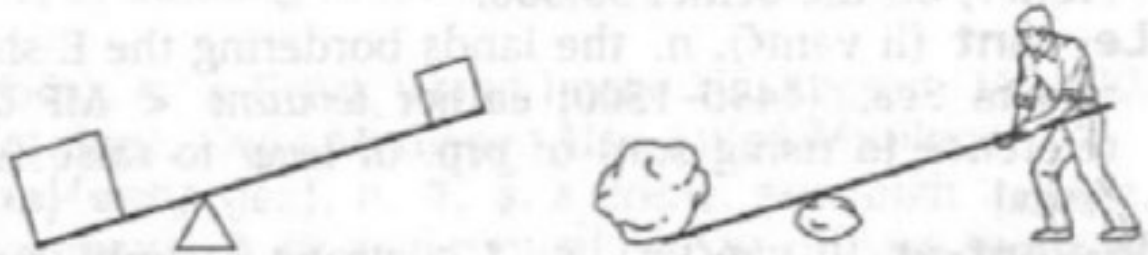

EX1006; EX2050, ¶48; -00707 POR, 12.

Petitioner's expert

8 Q Okay. So I'm holding, you can see it, I
9 believe, a just generic Pilot retractable pen, where I
10 click on the button on top, and the point comes out, and
11 I can write, and I can click the button again, and it
12 retracts back into the body, and doesn't get all over
13 everything when I put it in my pocket, right? You're
14 familiar with this sort of pen?
15 A I'm familiar with this.
16 Q Is the button on this pen, on this sort of
17 retractable pen, a lever?
18 A I haven't thought of that before. But
19 according to the definition, one of these definitions,
20 it's a projecting piece, and its mechanism -- so it
21 could be.

22 Q Okay. And is it -- is it your testimony that
23 the button on a retractable pen sits within the meaning
24 of lever, as would be understood by a person of ordinary
25 skill in the art of the 075 patent?

3 THE WITNESS: As according to the
4 description in the dictionary, a projecting piece by
5 which a mechanism is operator adjusted, it does seem to
6 fall into that category. Again, this is something
7 outside of what I looked into, had considered longer,
8 but my first pass right now, this short time we have,
9 that's -- those are my thoughts. It's not an official
10 opinion.

EX2053, 97:8-98:10; -00707 POR, 15.

PO's expert on Chu's button mechanism

113. Petitioner argues that Chu's button 16, shaft 14 and extension arm 28' together constitute the claimed lever "because it projects from housing 10 and operates the VR viewer." Petition at 96. This is incorrect because the whole point of this mechanism is to *avoid* any pivoting about a point. While the extension arm 28' allows the probe head to be offset from the actuator shaft (Ex. 1004, ¶0057), Chu makes clear that there is to be no rotation in this mechanism. Indeed, to ensure that there is no rotation, Chu teaches that "[i]n order to prevent the extension arm 28' from swinging or rotating about the actuator shaft 14 which may result in the probe head 18 probing at the wrong location on the touch screen 20, one or more posts or guides (not shown) may be provided along the sides of the extension arm 28'. This allows the probe head 18' to moves [*sic*] only vertically up or down." Ex. 1004, ¶0059. Thus, Chu's button 16, shaft 14 and extension arm 28' do not

EX2050, ¶113; -00707 POR, 45.

PO's expert on Petitioner's alternative combination

114. Petitioner's alternative argument that a POSA would have been motivated to replace Chu's button with a handle also fails. Even if simply replacing a button with a handle transformed it into a lever (which Petitioner does not explain), Petitioner does not establish that a POSA would have been motivated to replace Chu's button with a handle. Chu explains that the button 16 "may be in the shape of a mushroom or flat head such that it is comfortable for a user to press with a finger or hand." Ex. 1004, ¶0043. Thus, Chu provides a specific reason for the shape of its button. Contrary to Petitioner's suggestion, Chu teaches that its disclosed shape is well-suited to Chu's purpose. Moreover, if the button was replaced with a handle, it would make it more likely that depressing it would result in "swinging or rotating about the actuator shaft," which Chu teaches should be avoided. Ex. 1004, ¶0059. Thus, a POSA would not have been motivated to replace Chu's button with a handle.

EX2050, ¶114; -00707 POR, 45-46.

Google LLC v. DDC Technology, LLC

IPR2023-00707 (U.S. Patent No. 9,420,075)
IPR2023-00709 (U.S. Patent No. 10,528,199)
IPR2023-00711 (U.S. Patent No. 11,093,001)

Secondary Considerations

- Claim 1 of the ‘075 patent
- Claim 1 of the ‘199 patent
- Claim 1 of the ‘001 patent

7/10/2014: Mr. Buckley writes to Google about his design

On Thu, Jul 10, 2014 at 10:07 PM, Patrick Buckley <patrick@dodocase.com> wrote:

> Hi Andrew and Clay,
>
> I just wanted to give you a quick update on this past week. Lots of great stuff is happening hear at DODOcase.
>
> - I noticed for the double tap trigger in the #cardboard app it pops open the top and bottom nav bars but using the magnetic trigger it does not. Anychance you guys are going to make both magnetic and double tap behave the same way? I think we have a clever/elegant way to make a conductive tap button which has a couple advantages...
>
> - Eliminates a potential choking hazard for children. I spoke to children toy safety lab and thye said if you ever wanted to market or give these to children under 12 the design would have to change.
> - Could work universally on all smartphones, versus only working on ones with hall sensors.
> - It could help make this a better holiday gift product by eliminating child safety concerns.

EX2034, 3-4; -00707 POR, 100; -00707 POSR, 27.

7/11/2014: Google responds

On Fri, Jul 11, 2014 at 2:23 PM, Andrew Nartker [redacted] wrote:

> Hi Patrick, Craig,
>
> I shared this with the team, and they're all really excited with your progress
>
> [redacted]
>
> * **Conductive button**: Agree this could have benefits. We experimented briefly with this but didn't fully refine. Alex, one of our lead designers, has offered to visit DodoCase next week to share our tips here. Are you free next Weds afternoon/end of day? I'll try to join him as well if I can.

EX2034, 3; -00707 POR, 100.

7/25/14: Google receives videos of Mr. Buckley's prototype

EX2060; EX2054, ¶11; -00707 POR, 101.

7/26/14: Google employee Andrew Nartker responds

On Sat, Jul 26, 2014 at 5:19 PM, Andrew Nartker [redacted] wrote:

> (+Alex)
>
> Hi Patrick,
>
> That button looks really neat! Thanks for sharing. [redacted]

EX2034, 1; -00707 POR, 101.

7/28/14: Google employee Alex Kaufmann responds

On Mon, Jul 28, 2014 at 10:39 AM, Alex Kauffmann <captainalex@google.com> wrote:

> Hey guys,
>
> That's an ingenious button! Does it work consistently on a variety of phones? I'd love to play with it.

EX2034, 1; -00707 POR, 101.

7/28/14: Google employee Clay Bavor responds

Subject: Re: DODOcase Cardboard Viewer Update

Date: Monday, July 28, 2014 at 20:14:16 Central Daylight Time

From: Clay Bavor [redacted]

To: Alex Kauffmann [redacted]

CC: Andrew Nartker [redacted], Patrick Buckley <patrick@dodocase.com>, craig dalton <craig@dodocase.com>

That button is genius.

Clay

EX2034, 1; -00707 POR, 101.

9/17/14: DODOcase launches its V1.2 Viewer

7. On or around September 17, 2014, DODOcase launched its own V1.2 VR Viewer, which included a capacitive/conductive touch button rather than Google's magnet switch (making it distinct from Google's original design).

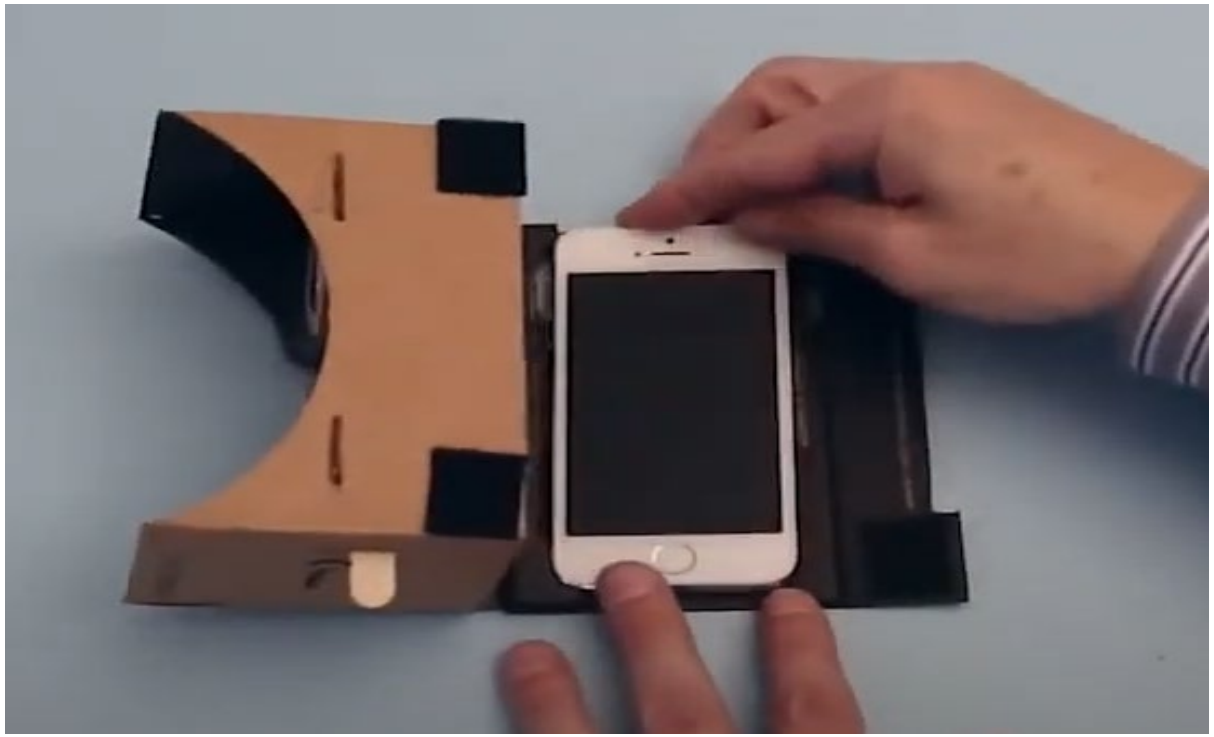

EX2033, ¶7; -00707
POR, 102.

Mr. Buckley's testimony re DODOcase & '075 Claim 1

2. Claim 1 of the '075 patent reads on the DODOcase VR 1.2 Viewer. I have reviewed the claim chart included in Patent Owner's Response in IPR2023-00707, and I confirm that it shows how the DODcase VR1.2 Viewer embodies claim 1 of the '075 patent.

3. The DODOcase VR 1.2 did not include any critical unclaimed features beyond those recited in claim 1 of the '075 patent. As described below, the distinguishing feature of the DODOcase VR 1.2 Viewer was the user input mechanism. The input mechanism recited in claim 1 of the '075 patent and found in the VR1.2 Viewer drew praise from Google.

EX2054, ¶¶2-3;
-00707 POR, 55-56.

Mr. Buckley's testimony re DODOcase & '199 Claim 1

5. Claim 1 of the '199 patent reads on the DODOcase VR 1.2 Viewer. I have reviewed the claim chart included in Patent Owner's Response in IPR2023-00709, and I confirm that it shows how the DODcase VR1.2 Viewer embodies claim 1 of the '199 patent.

6. The DODOcase VR 1.2 did not include any critical unclaimed features beyond those recited in claim 1 of the '199 patent. As described below, the distinguishing feature of the DODOcase VR 1.2 Viewer was the user input mechanism. The input mechanism recited in claim 1 of the '199 patent and found in the VR1.2 Viewer drew praise from Google.

EX2054, ¶¶5-6;
-00709 POR, 24.

Mr. Buckley's testimony re DODOcase & '001 Claim 1

8. Claim 1 of the '001 patent reads on the DODOcase VR 1.2 Viewer. I have reviewed the claim chart included in Patent Owner's Response in IPR2023-00711, and I confirm that it shows how the DODcase VR1.2 Viewer embodies claim 1 of the '001 patent.

9. The DODOcase VR 1.2 did not include any critical unclaimed features beyond those recited in claim 1 of the '001 patent. As described below, the distinguishing feature of the DODOcase VR 1.2 Viewer was the user input mechanism. The input mechanism recited in claim 1 of the '001 patent and found in the VR1.2 Viewer drew praise from Google.

EX2054, ¶¶8-9;
-00711 POR, 27.

Sales of DODOcase's V1.2 Viewer

33. In October of 2014, Regan Arts published a book titled Beginner's Guide to Virtual Reality, which was packaged with the V1.2 Viewer, resulting in 50,000 units shipped to customers across the United States. My present recollection is that these V1.2 Viewers were identified as "Patent Pending."

EX2033, ¶33; -00707 POR 102.

Sales of DODOcase's V1.2 Viewer

	Product	Product Revenue	% Product Revenue
1.	Virtual Reality Cardboard Toolkit	$216,815.20	11.38%
2.	Customizer DODOcase for iPad Air 2	$181,084.45	9.51%
3.	Charging Stand for Apple Watch - Walnut	$149,896.00	7.87%
4.	Customizer DODOcase for iPad Air	$146,806.95	7.71%
5.	Customizer DODOcase for iPad Mini 1/2/3	$107,839.25	5.66%
6.	Customizer DODOcase for iPad 2/3/4	$99,317.25	5.21%
7.	Charging Stand for Apple Watch	$68,798.00	3.61%
8.	Virtual Reality Cardboard Toolkit - V1.2	$67,639.45	3.55%

EX2054, ¶18; EX2055;
-00707 POR 102.

Google launches its V2 viewer

48. On or around May 28, 2015, Google launched its GC V2 Viewer, which was designed to replace the rudimentary magnet control mechanism of the GC V1 Viewer with a conductive/capacitive button to create a touch event on an electronic device.

EX2004, ¶48; -00707 POPR, 36.

Mr. Buckley re Google's V2 & '075 patent claim 1

4. Soon after Google learned of the DODOcase VR 1.2 Viewer and praised its capacitive button mechanism, Google copied DODOcase by incorporating a similar capacitive button as provided on the DODOcase VR 1.2 Viewer in its own GCV2 VR viewer. I have reviewed the claim chart included in Patent Owner's Response in IPR2023-00707, and I confirm that it shows how Google's GCV2 VR viewer embodies claim 1 of the '075 patent in much the same way as the DODOcase VR 1.2 Viewer, including the capacitive button.

EX2054, ¶4; -00707 POR, 67.

Mr. Buckley re Google's V2 & '199 patent claim 1

7. Soon after Google learned of the DODOcase VR 1.2 Viewer and praised its capacitive button mechanism, Google copied DODOcase by incorporating a similar capacitive button as provided on the DODOcase VR 1.2 Viewer in its own GCV2 VR viewer. I have reviewed the claim chart included in Patent Owner's Response in IPR2023-00709, and I confirm that it shows how Google's GCV2 VR viewer embodies claim 1 of the '199 patent in much the same way as the DODOcase VR 1.2 Viewer, including the capacitive button.

EX2054, ¶7; -00709 POR, 34.

Mr. Buckley re Google's V2 & '001 patent claim 1

10. Soon after Google learned of the DODOcase VR 1.2 Viewer and praised its capacitive button mechanism, Google copied DODOcase by incorporating a similar capacitive button as provided on the DODOcase VR 1.2 Viewer in its own GCV2 VR viewer. I have reviewed the claim chart included in Patent Owner's Response in IPR2023-00711, and I confirm that it shows how Google's GCV2 VR viewer embodies claim 1 of the '001 patent in much the same way as the DODOcase VR 1.2 Viewer, including the capacitive button.

EX2054, ¶10; -00711 POR, 36.

Market response to Google Cardboard V2

Q. What was the market response after Google introduced the manufacturing template for the V2 VR viewer that included the conductive input mechanism?

A. From my recollection, it quickly became adopted by pretty much everyone in the market, because it was such an improvement over the magnetic button. And the magnetic button kind of quickly faded away, and was replaced by this design that was outlined in this manufacturing template.

Q. What's the basis for your knowledge about that market response?

A. Because we were one of the main manufacturers of these low cost VR headsets, we kept close track of other competitors' products. And noticed that there was this shift. I also recall at the time, that the products listed on the WWGC page, you know, products with this capacitive touch button, you know, quickly became the most prominent ones. So that would be the basis of my assessment of that.

EX1023, 159:7-25; -00707 POSR, 27.

Google Cardboard shipments: Q2 2014-Jan. 2016

1 Million Cardboard Headsets Shipped, Google Says

News Bits

By **Ben Lang** – Jun 2, 2015

Business

Google ships five million Cardboard virtual reality devices

Reuters

January 27, 2016 11:33 AM CST · Updated 8 years ago

EX2057; EX2058; EX2054, ¶20; -00707 POR, 104.

Google Cardboard shipments as of Feb. 2017

The Verge / Tech / Reviews / Science /

TECH / GOOGLE / VIRTUAL RE LITY

Google has shipped over 10 million Cardboard VR headsets

By Adi Robertson, a senior tech and policy editor focused on VR, online platforms, and free expression. Adi has covered video games, biohacking, and more for The Verge since 2011.

Feb 28, 2017, 4:52 PM CST | 0 Comments / 0 New

EX2059; EX2054, ¶20; -00707 POR, 104.

Google Cardboard shipments: Q2 2014-Jan. 2016

20. Google's public statements suggest version 1 cardboard VR with magnet input was selling at ~250,000 units per quarter in the 1 year period from Q2 2014 launch to Q2 2015. Ex. 2057 [https://web.archive.org/web/20221210082644/https://www.roadtovr.com/1-million-cardboard-headsets-shipped-google-says/].[1] Google's public statements also appear to indicate that v2 VR cardboard with capacitive mechanism sold ~2 million units per quarter after its launch in Q3 and Q4 2015 (Ex. 2058 [https://www.reuters.com/article/us-alphabet-cardboard-idUSKCN0V5297/])[2], representing nearly a 10x increase over the magnet input version of the product. From Q1 2016 to Q1 2017, Google statements also show that on average ~1 million units per quarter of v2 VR cardboard with capacitive button mechanism were sold (Ex. 2059 [https://www.theverge.com/2017/2/28/14767902/google-cardboard-10-million-shipped-vr-ar-apps])[3], totaling 1 million V1 VR carboard with magnet input products sold in first year of product launch and 9 million V2 VR cardboard with capacitive button units sold in first 1.5 years of product launch. Since Google's V2 viewer copied DODOcase's capacitive button mechanism, Google's greatly increased commercial success provides objective indicia of nonobviousness.

EX2054, ¶20; -00707 POR, 104.

CERTIFICATE OF SERVICE

Pursuant to 37 C.F.R. §§ 42.6(e) and 42.105(a) and (b), I certify that on the date indicated below, a true and accurate copy of the foregoing document was served on the following counsel for Petitioner via e-mail, pursuant to Petitioner's consent to e-mail service:

Michael L. Kiklis
Kiklis Law Firm, PLLC
1800 Diagonal Rd., Suite 600
Alexandria, VA 22314
E-mail: michael@kiklislaw.com

Mark Liang (Reg. No. 81,045)
O'Melveny & Myers LLP
Two Embarcadero Center, 28th Floor
San Francisco, CA 94111
Telephone: (415) 984-8700
Fax: (415) 984-8701
mliang@omm.com

Dated: August 5, 2024

/Cortney S. Alexander/
Cortney S. Alexander
Reg. No. 54,778
Kent & Risley LLC
5755 N Point Pkwy, Ste 57
Alpharetta, GA 30022
(404) 855-3867
(770) 462-3299 (fax)
cortneyalexander@kentrisley.com