UNITED STATES PATENT AND TRADEMARK OFFICE

BEFORE THE PATENT TRIAL AND APPEAL BOARD

GOOGLE LLC

Petitioner,

v.

DDC TECHNOLOGY, LLC,

Patent Owner

U.S. Patent No. 9,420,075

Case No.: IPR2023-00707

PETITIONER'S DEMONSTRATIVE EXHIBITS

FOR ORAL ARGUMENT

Petitioner hereby submits its demonstrative exhibits for use at the oral argument scheduled for August 7, 2024.

Dated: August 5, 2024

Respectfully submitted,

Michael L. Kiklis_____

Michael L. Kiklis
Reg. No. 38,939
Attorney for Petitioner
Google LLC

Google LLC v. DDC Technology, LLC

IPR2023-00707 (Patent 9,420,075)
IPR2023-00708 (Patent 9,811,184)
IPR2023-00709 (Patent 10,528,199)
IPR2023-00711 (Patent 11,093,001)

Petitioner Google's Oral Hearing Demonstratives

Michael L. Kiklis
Kiklis Law Firm, PLLC
Lead counsel for Petitioner

The Cases

Case No.	Patent No.	Challenged Claims
00707	9,420,075	1-12, 14, and 18-20
00708	9,811,184	~~1-5, 7-10,~~ 12, and 16-18
00709	10,528,199	1, 2, 4–6, 17–26, 30, 34, 35, and 37–39
00710	11,093,000	~~1–6 and 8–33~~
00711	11,093,001	1–30

The Patents

Virtual Reality Viewer and Input Mechanism. EX1001, title.*

TECHNICAL FIELD OF THE INVENTION

The present invention relates to virtual reality viewer devices, in particular, virtual reality viewer devices for use with personal mobile electronic devices and having an input device.

EX1001, 1:20-26.

*All exhibits refer to IPR2023-00707, unless noted otherwise. All annotations and highlighting to figures added, unless noted otherwise.

The Patents (cont'd)

The '075 patent describes and claims a virtual reality viewer (VR viewer) configured to hold a mobile electronic device and has an input device. The patent admits that VR viewers were well-known at the time of the alleged invention and so were input devices for interacting with these viewers. Pet., p. 1; EX1001, 1:30-2:10, cl. 1.

The Patents (cont'd)

1. A virtual reality viewer for use with a mobile electronic device having a touch-screen, the viewer comprising:

a housing configured to receive the mobile electronic device, wherein the housing is configured to hold the mobile electronic device such that the touch-screen is generally centered in a horizontal direction and directly in a user's field of view when looking into a generally hollow interior of the housing through a side opposite the touch-screen;

an input mechanism that is accessible from an exterior of the housing and is moveable within the interior between at least a first position and an extended position, the input mechanism comprising:

an electrical shield having a surface, wherein only a portion of the surface of the electrical shield is configured to contact a central region of the touch-screen of the mobile electronic device when the input mechanism is in the extended position.

EX1001, cl. 1.

The Patents (cont'd)

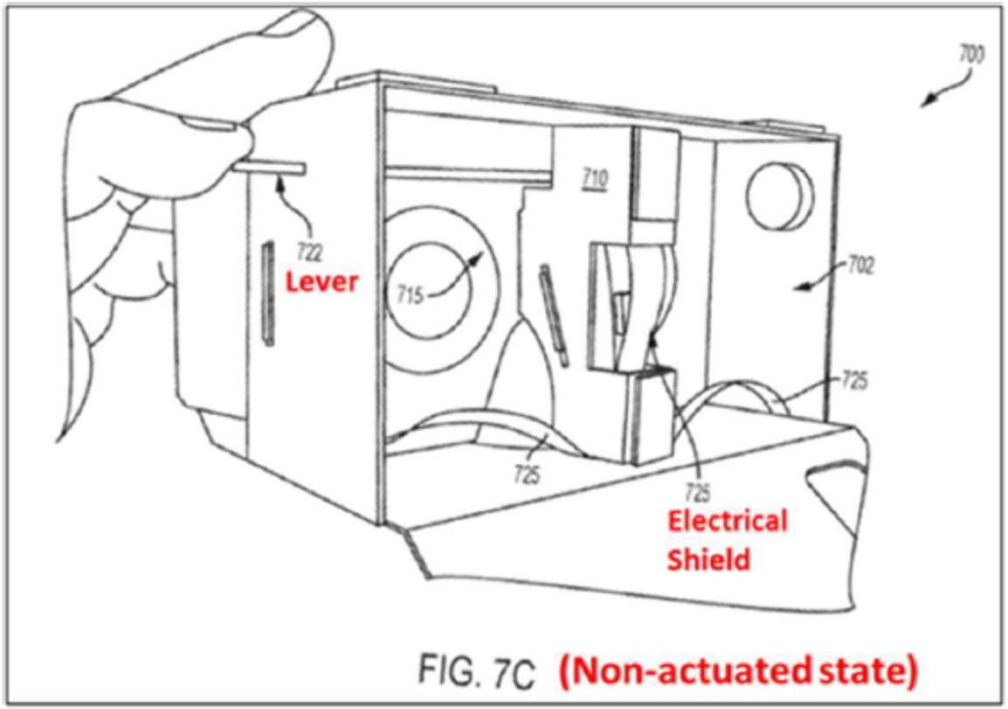

FIG. 7C (Non-actuated state)

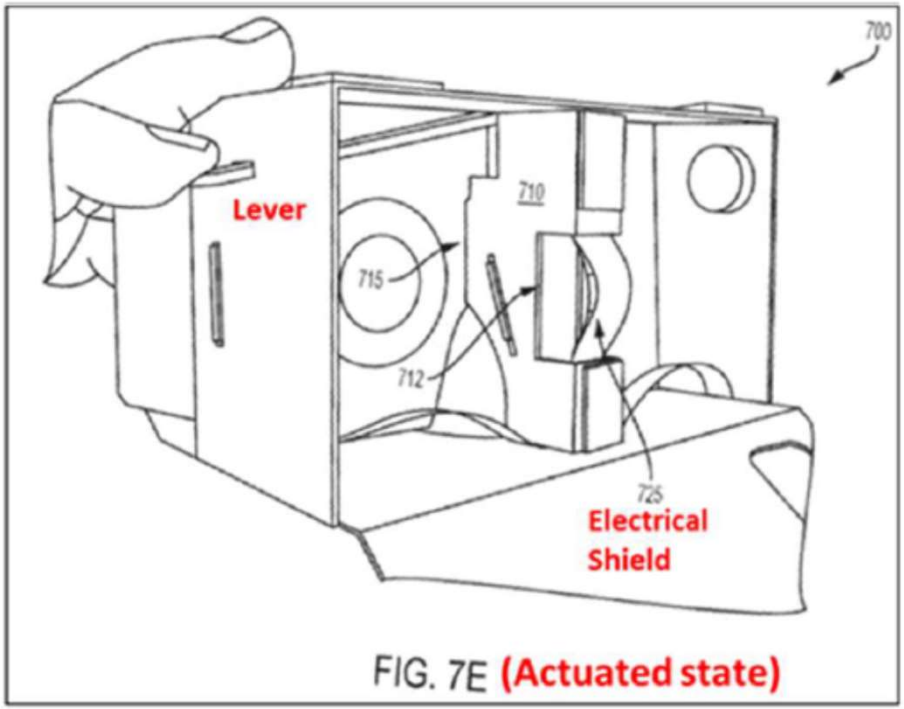

FIG. 7E (Actuated state)

Pet., p. 16; EX1001, Figs. 7C, 7E

The Patents (cont'd)

Q. So it was your first version of a VR viewer differed very slightly from Google Cardboard Version 1; is that right?

MR. ALEXANDER: Object to form.

THE WITNESS: It was the same. It worked in the same ways. The shape was largely the same, but the pattern for the cardboard was different, if that makes sense.

EX1023, 29:6-13; Reply, fn 3.

The Patents (cont'd)

PO claims its distinguishing feature is "the user input mechanism," a conductive/capacitive input mechanism in general. Reply, p. 24; POR, p. 66; EX2054, ¶¶3, 4, 6, 7.

During prosecution, PO faced an anticipation rejection based on Compton (US 2013/0141360) which discloses a conductive/capacitive input mechanism on a VR viewer. Reply, p. 24; EX1022, ¶¶0044-0050; cls. 1, 6, 9, 10, 11, 14; Figs. 1-6b.

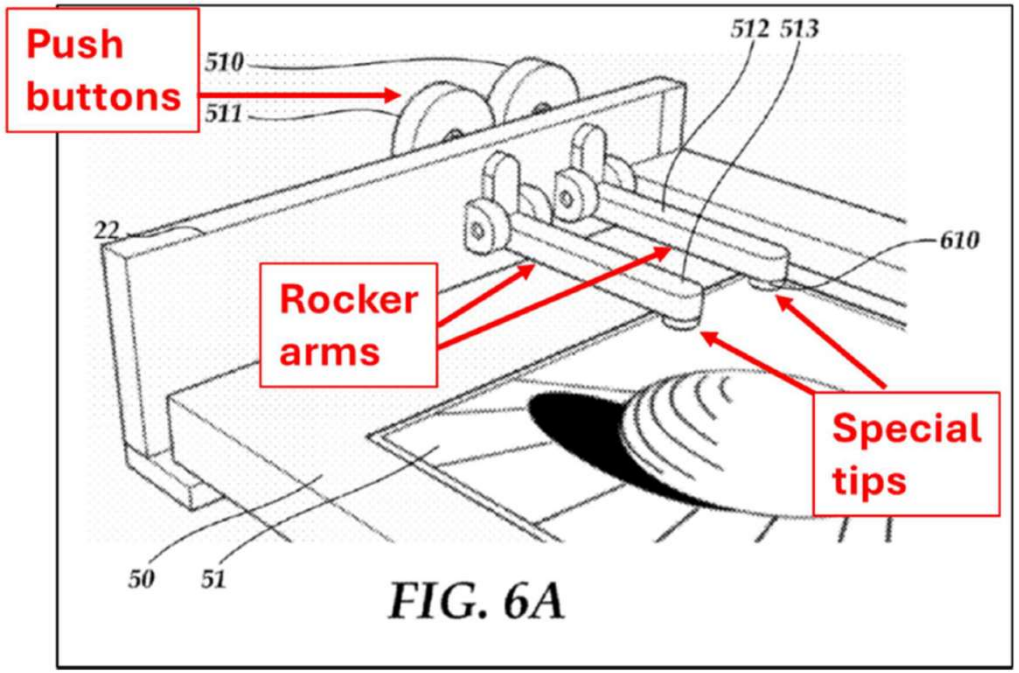

00711 Reply, p. 15; see also Pet. p. 18.

The Patents (cont'd)

PO has admitted that a conductive/capacitive input mechanism is not novel. Reply, p. 24.

an input mechanism that is accessible from an exterior of the housing and is moveable within the interior between at least a first position and an extended position, the input mechanism comprising:

an electrical shield having a surface, wherein only a portion of ~~a~~ the surface of ~~the input mechanism~~ the electrical shield is configured to contact a central region of the touch-screen of the mobile electronic device when the input mechanism is in the extended position.

Pet., p. 17; Reply, p. 25; EX1008, p. 22.

Claim Construction

Virtual Reality Viewer: "A viewer of an artificial environment, where "viewer" includes both handheld devices and headsets.

Electrical Shield/Electric Shield: "A material configured to induce a touch event that is electronically detectable by a touchscreen/device when at least a portion of the shield contacts or is in proximity to a touchscreen.

Lever: "A projecting piece by which a mechanism is operated or adjusted."

Pet., pp. 22-23.

Claim Construction: Lever

1 a: a bar used for prying or dislodging something

b: an inducing or compelling force : TOOL

use food as a political lever

—Time

2 a: a rigid piece that transmits and modifies force or motion when forces are applied at two points and it turns about a third

specifically : a rigid bar used to exert a pressure or sustain a weight at one point of its length by the application of a force at a second and turning at a third on a fulcrum

b: ***a projecting piece by which a mechanism (see MECHANISM sense 1) is operated or adjusted.*** Merriam-Webster Online Dictionary, Lever Definition & Meaning - Merriam-Webster (emphasis added).

Pet., p. 26

Claim Construction: Lever (cont'd)

lev•er (lev′ər, lē′vər), *n.* **1.** a rigid bar that pivots about one point and that is used to move an object at a second point by a force applied at a third. **2.** a means or agency of persuading or of achieving an end. —*v.t.* **3.** to move or lift with or as if with a lever. —*v.i.* **4.** to use a lever. [1250–1300; ME *levere, levour* for **lever* < AF; OF *levier* = *lev(er)* to lift (< L *levāre* to lighten, lift) + *-ier* -IER[2]]

levers (def. 1)

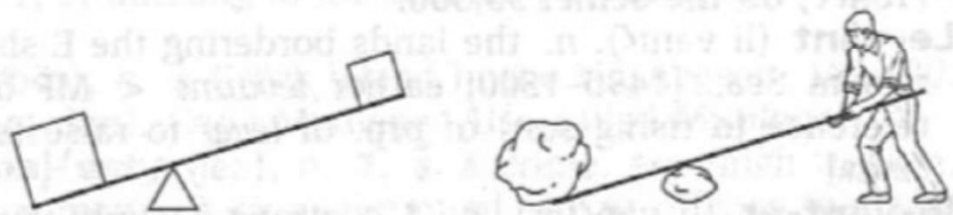

EX1006, pg. 3 (Random House Webster's College Dictionary, pg. 764 (2000)).

Pet., p. 27

Claim Construction: Lever (cont'd)

"[T]he electro-mechanical input mechanism."

EX1001, Abstract; *see also*, 10:57-60.

> A stiff rod or beam pivoted about a fulcrum with a load at some point along the lever being moved by a force (effort) at a third point. There are three classes of lever defined according to the relative positions of the effort, fulcrum, and load. For class 1, the effort and the load are on opposite sides of the fulcrum (as in a pair of pliers); for class 2, effort and load are on the same side of the fulcrum with the effort further away (as in a wheelbarrow); class 3 is like class 2, but with the load further away (as with tweezers). Classes 1 and 2 provide a mechanical advantage, but class 3 does not.

POR, p. 12-13 (citing Oxford Dictionary of Mechanical Engineering)

Claim Construction: Lever (cont'd)

Also called "leveling staff," "leveling pole."

Lev·el·ler (lĕv′ə-lər) *n.* A member of an English radical political movement active in the 1640's that advocated universal male suffrage, parliamentary democracy, and religious tolerance.

Le·ven, Loch (lē′vən). A lake occupying eight square miles in east-central Scotland.

le·ver (lĕv′ər, lē′vər) *n.* **1.** A simple **machine** *(see)* consisting of a rigid body, typically a metal bar, pivoted on a fixed fulcrum. **2.** A projecting handle used to adjust or operate a mechanism. **3.** A means of accomplishment. —*tr.v.* **levered, -vering, -vers.** To move or lift with a lever. [Middle English *lever, levour,* from Old French *levier, leveor,* from *lever,* to raise, from Latin *levāre,* from *levis,* light. See **legwh-** in Appendix.*]

le·ver·age (lĕv′ər-ĭj, lē′vər-) *n.* **1.** The action of a lever. **2.** The mechanical advantage of a lever. **3.** Positional advantage; power to act effectively.

lev·er·et (lĕv′ər-ĭt) *n.* A young hare, especially one less than a year old. [Middle English, from Norman French *leveret,* diminutive of *levre,* variant of Old French *lievre,* hare, from Latin *lepus* (stem *lepor-*). See **leporine.**]

Le·ver·ku·sen (lā′vər-kōō′zən). A city of West Germany, in southwestern North Rhine-Westphalia. Population, 103,000.

Le·ver·rier (lə-vĕ-ryā′), **Urbain Jean Joseph.** 1811–1877. French astronomer.

Le·vi[1] (lē′vī′). A son of Jacob and Leah. Genesis 29:34. [Hebrew, "joining."]

Le·vi[2] (lē′vī′) *n.* A tribe of Israel descended from Levi.

lev·i·a·ble (lĕv′ē-ə-bəl) *adj.* Liable to be levied or levied on.

yes/z zebra, size/zh vision/ə about, item, edible, gallop, circus/ot. loch/N *Fr.* bon. ***Follows main vocabulary.** †**Of obscure origin.**

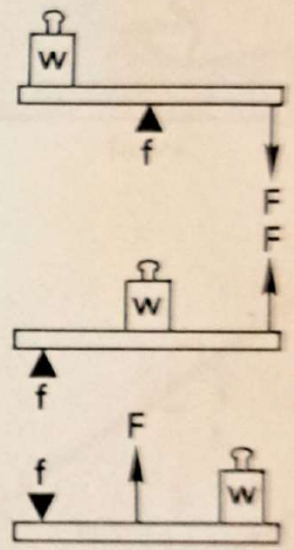

lever
Three basic types of lever; f is the fulcrum and F is the force needed to raise a weight W

POR, p. 16 (citing American Heritage Dictionary of the English Language)

Claim Construction: Lever (cont'd)

GCV2 Physical Unit.

Reply, p. 8 (citing POR, p. 92)

Claim Construction: Lever (cont'd)

U.S. Patent No. 9,420,075 Claim 12	GOOGLE CARDBOARD GCV2 VR VIEWER ("*Cardboard Viewer*")
The virtual reality viewer of claim 1, wherein the input mechanism includes a lever and a flexible linkage coupled to the housing,	*The Cardboard Viewers are virtual reality viewers as claimed in independent claim 1.* *The input mechanism of the Cardboard Viewers includes a lever and a flexible linkage coupled to the housing.* 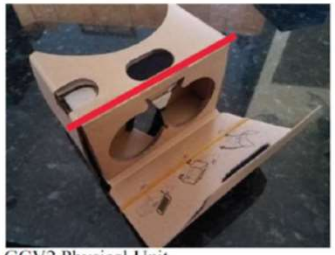 The flexible linkage of the Cardboard Viewers is the cardboard portion of the input mechanism coupled to the housing and which deforms upon depression of the lever and returns to its original position upon cessation of depression. See also annotated supplement. GCV2 Physical Unit. GCV2 Physical Unit.

Reply, p. 9 (citing PO's infringement contentions EX1011, p. 117 (annotations in original))

Claim Construction: Claims 7 and 8

7. The virtual reality viewer of claim **6**, wherein the surface of the electrical shield is sized to have electrical properties that are sufficient to be detected by the touch-screen based on capacitance when the input mechanism is in the extended position and only the portion of the surface is contacting the touch-screen.

8. The virtual reality viewer of claim **6**, wherein the surface of the electric shield is sized to have sufficient capacitive properties such that contact between only the portion of the surface and the touch-screen can be detected by a capacitive touch-screen when the input mechanism is in the extended position and in the absence of human contact with the electric shield.

EX1001, cls. 7, 8.

Claim Construction: Claims 7 and 8 (cont'd)

In some implementations, the electric shield is configured (e.g., sized and/or positioned) so as to have capacitive properties sufficient to be detected by a capacitive touch-screen when the input mechanism is in the extended position and in the absence of human contact with the electric shield. How-

EX1001, 7:52-56.

Moreover, the exemplary viewer and user input assembly can be configured to allow a user to interact with the touch sensitive screen without reliance on the electrical properties of the human body to induce the electrical event. For instance, the metallized film **725** can be sized such that it is suitable for inducing a touch event without requiring user contact therewith. In addition or alternatively, the portion of the metallized

EX1001, 10:61-67.

mechanism. The pad is used to create a sufficiently sized contact surface between the front side of the shield material and the touchscreen so as to register a touch input event on the screen (e.g., to simulate the size and shape of a finger). The

EX1001, 8:52-55; *see also* 8:40-9:9, 10:39-45, 10:45-54.

The Prior Art: Kondo

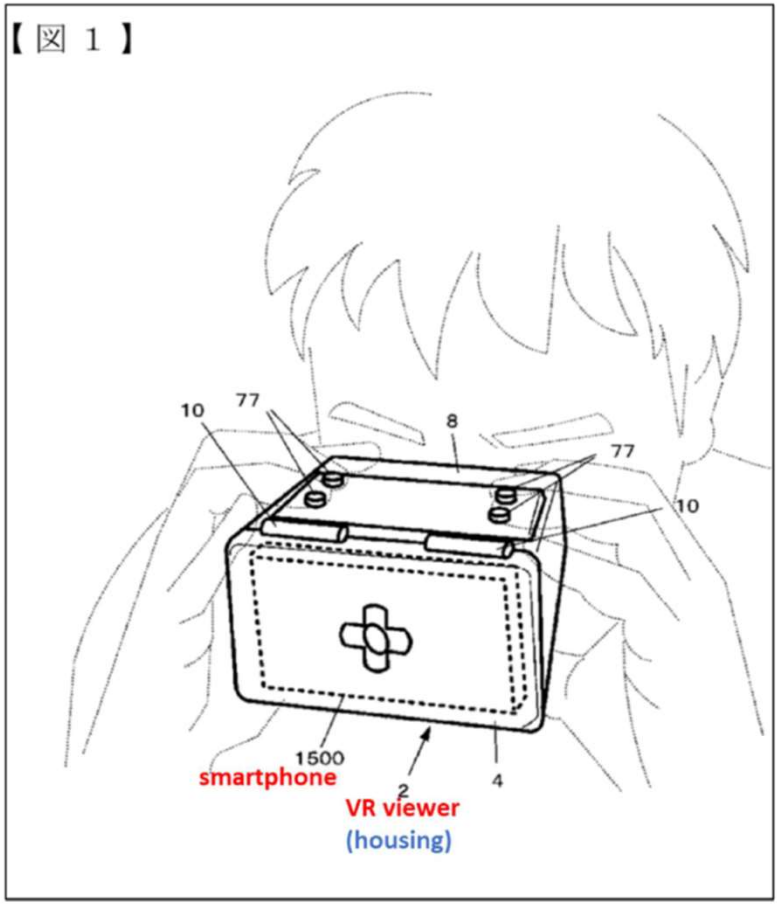

Pet., p. 46; EX1003, Fig. 1.

The Prior Art: Kondo

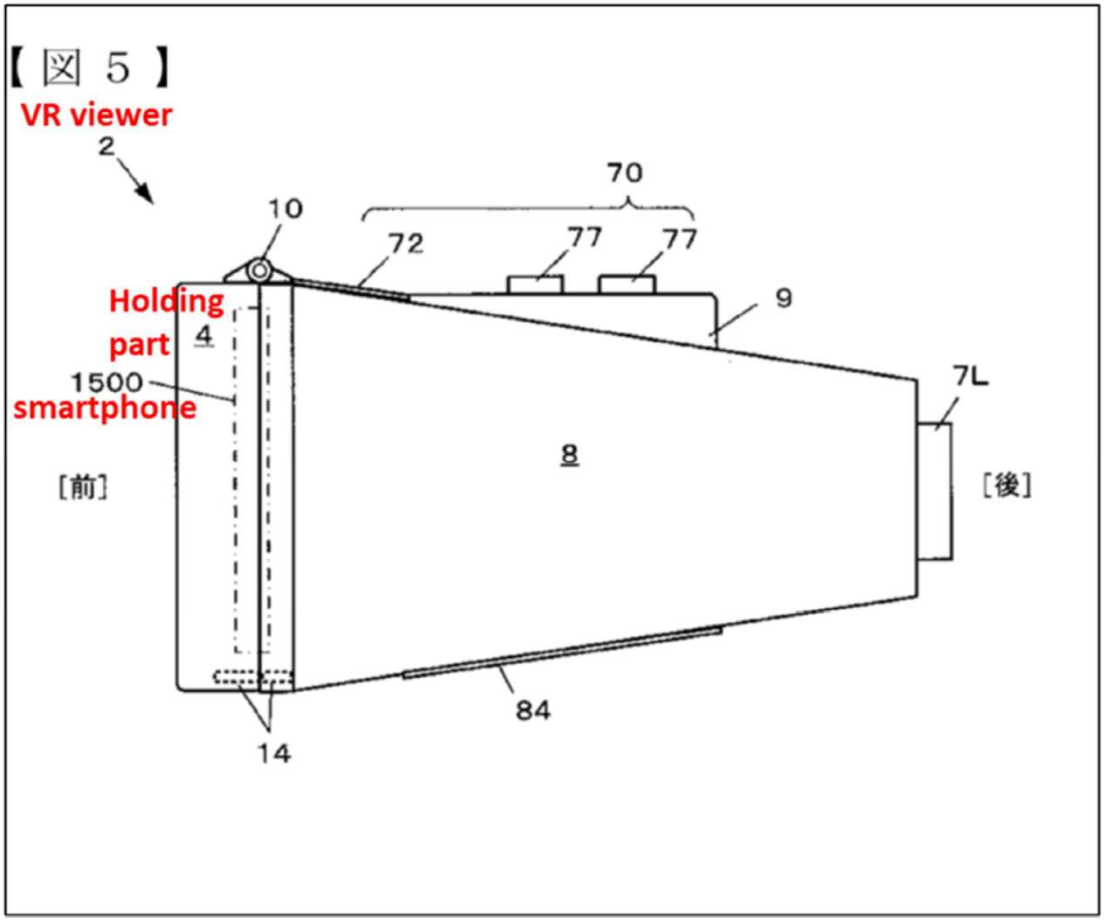

Pet., p. 47; EX1003, Fig. 5.

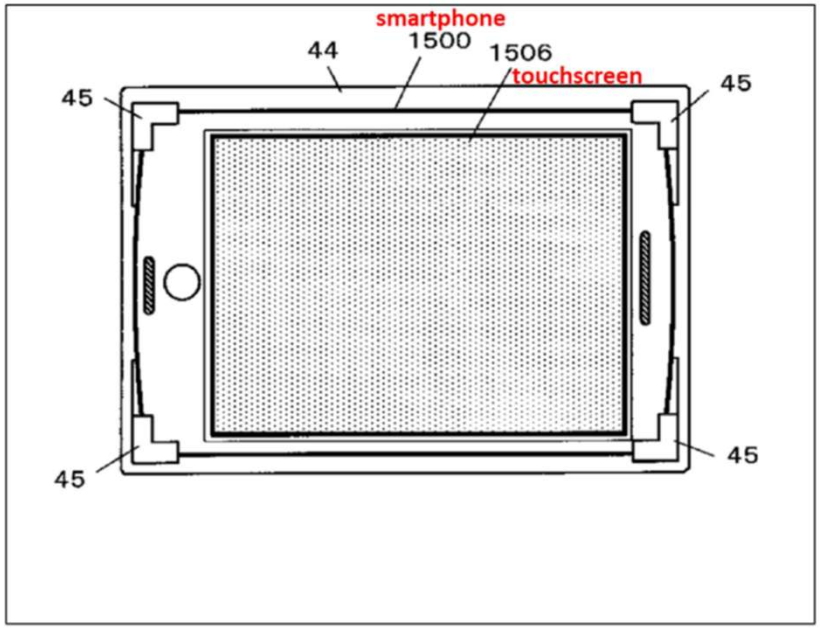

Pet., p. 31; EX1003, Fig. 8(2).

EX1003, ¶¶0023-0024 ("the touch panel 1506 is a *projected capacitive touch panel*"); Reply, p. 12.

The Prior Art: Chu

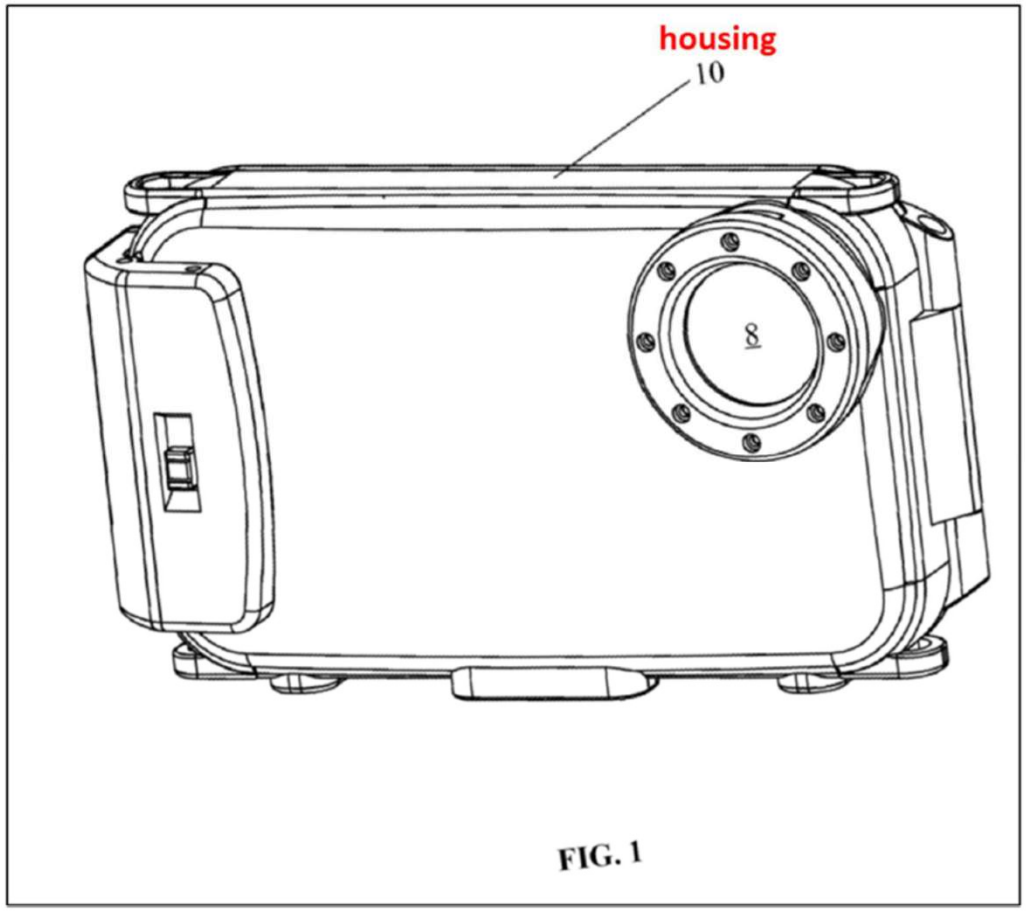

Pet., p. 54; EX1004, Fig. 1.

The Prior Art: Chu

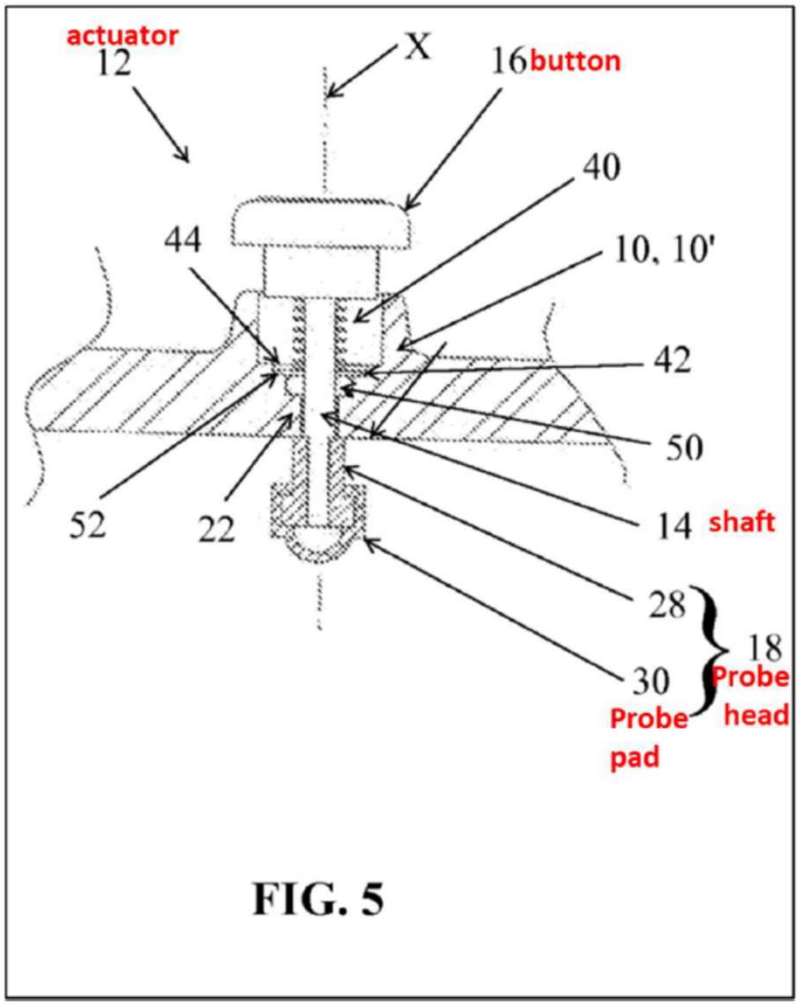

FIG. 5

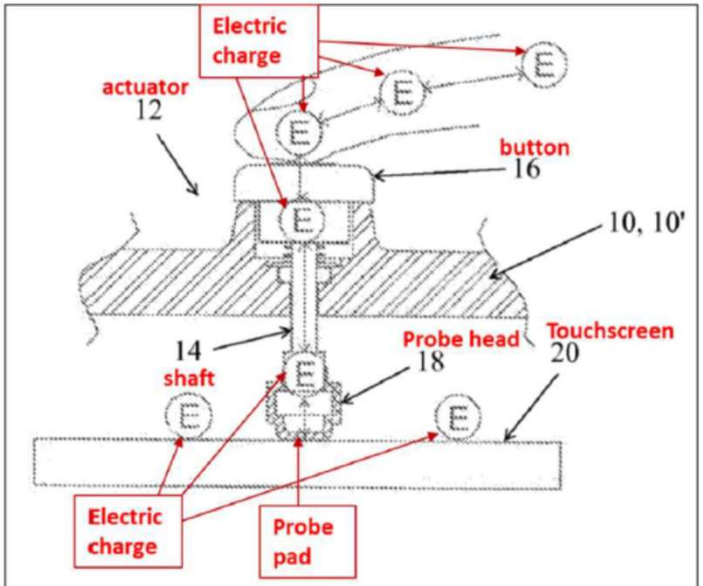

FIG. 4

Pet., p. 57; EX1004, Figs. 4, 5.

The Prior Art: Chu

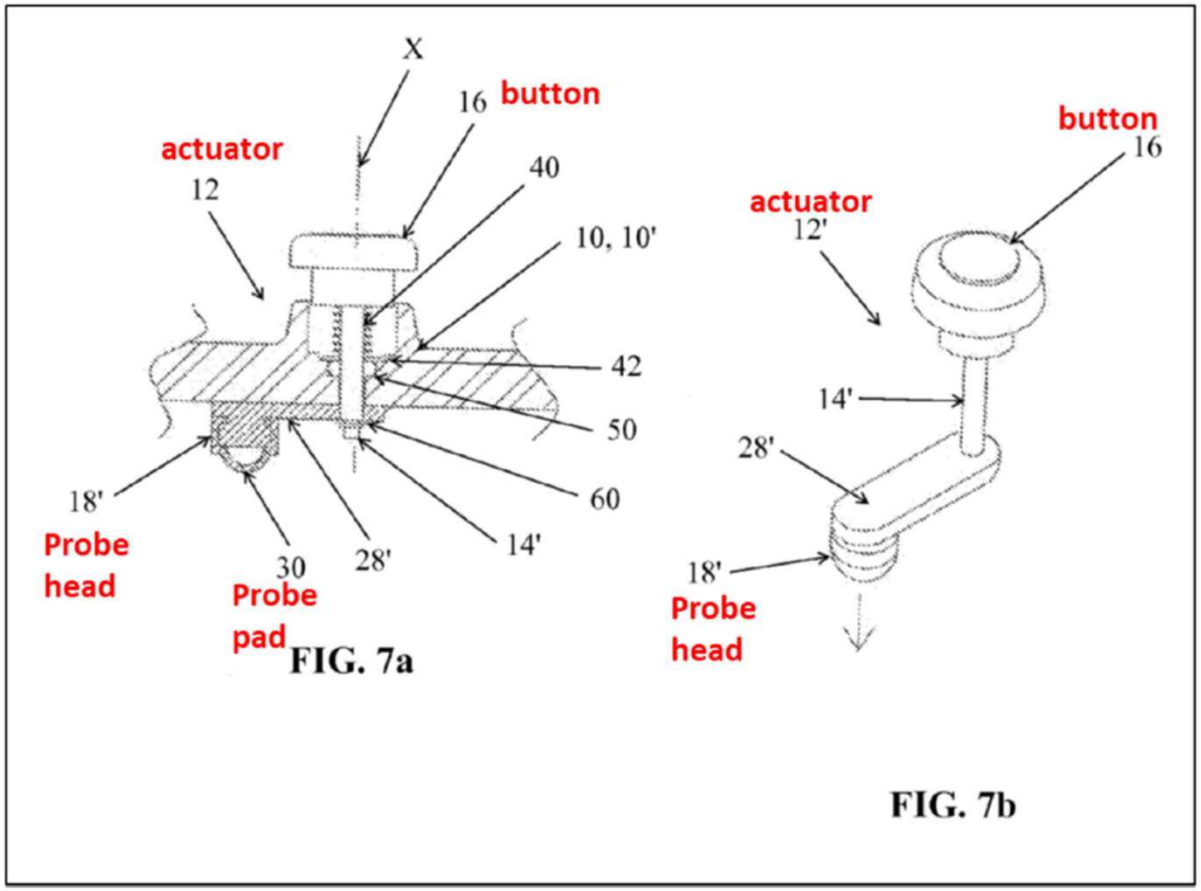

Pet., p. 35; EX1004, Figs. 7a, 7b.

The Combination

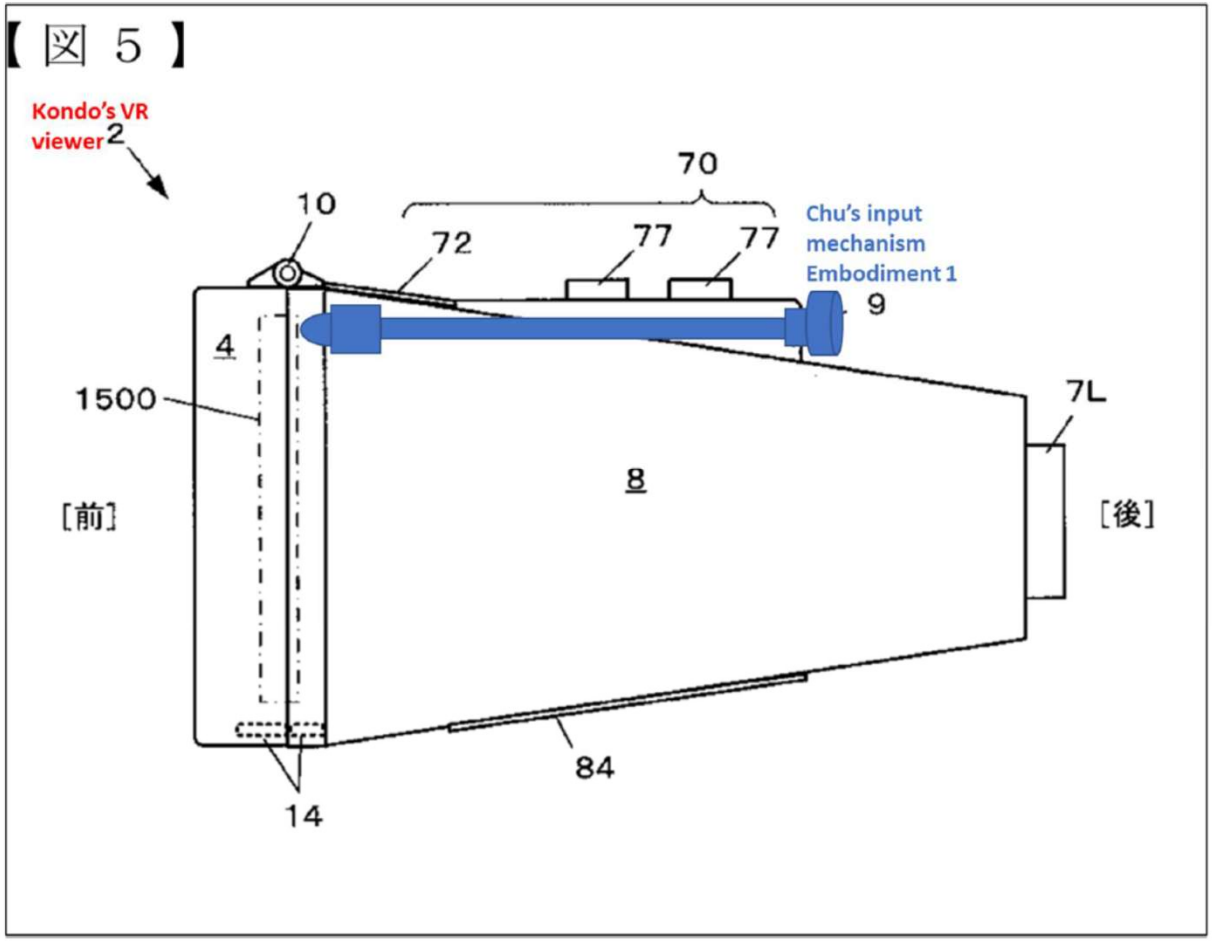

Pet., p. 40 (Chu's input device Emb. 1 in Kondo's Fig. 5)

The Combination

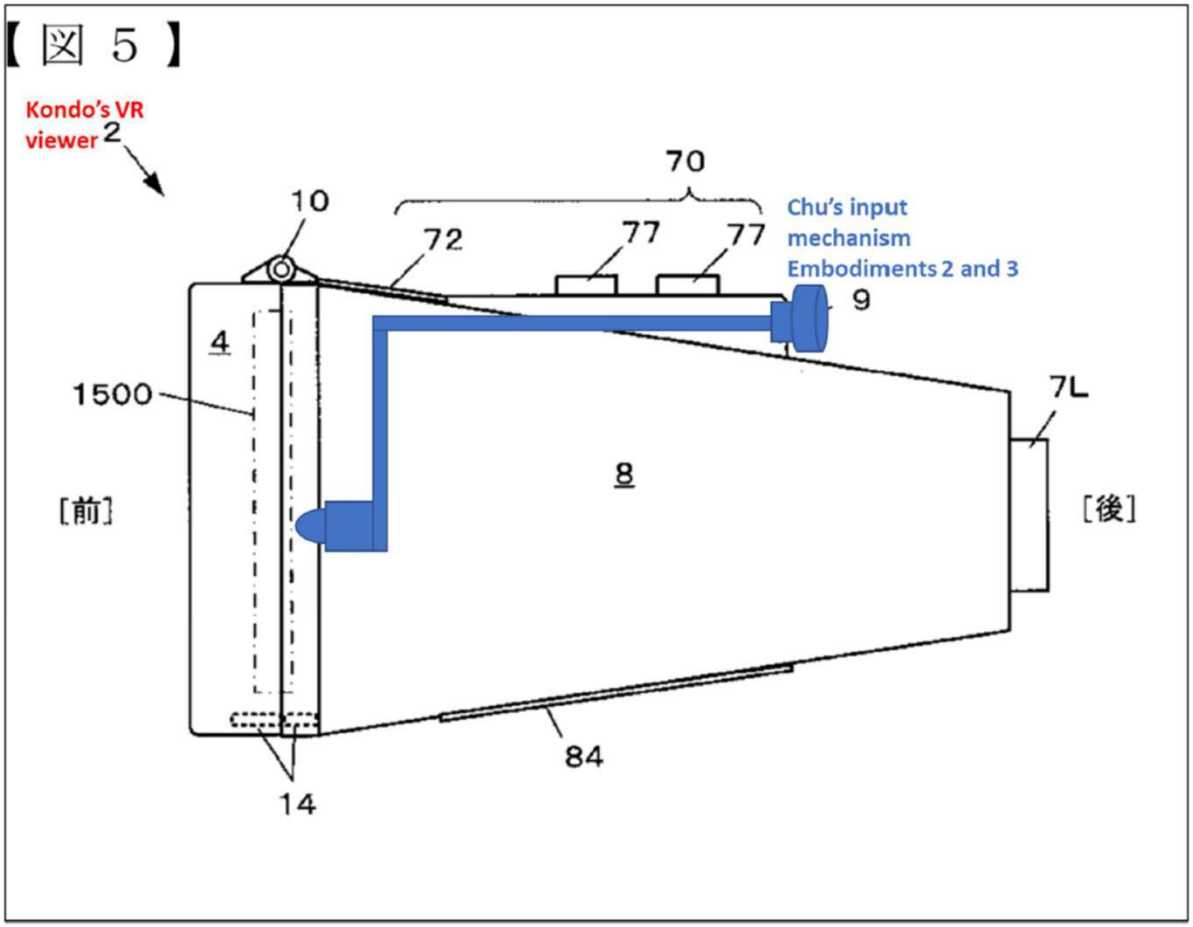

Pet., p. 40 (Chu's input device Embs. 2, 3 in Kondo's Fig. 5)

Motivations to combine Kondo and Chu

1. To work with both capacitive and resistive touchscreens.
2. Both Kondo and Chu face a similar problem, the external activation of the smartphone's touchscreen enclosed in that device.
3. The combination allows differing levels of pressure applied to input mechanism, which can be interpreted as differing inputs, thus providing a wider range of input at a single location, rather than just binary input.
4. To add a swipe input.
5. To provide waterproof capabilities, making the device less susceptible to damage from water and other environmental factors, like dirt and dust.
6. To allow the device to be cleaned without the fear of cleaning fluid reaching the device's inner parts. This can be important for use in a sanitary environment (*e.g.,* during a medical procedure or in a manufacturing facility, like a semiconductor fabrication facility).

Reasonable expectation of success: Both Kondo and Chu are simple mechanical devices. Thus, a POSA would have a reasonable expectation of success. In fact, a POSA would consider the combination's formation to be merely routine, requiring little skill.

Pet., pp. 38-39.

Claim 10: Chu discloses a compressible pad

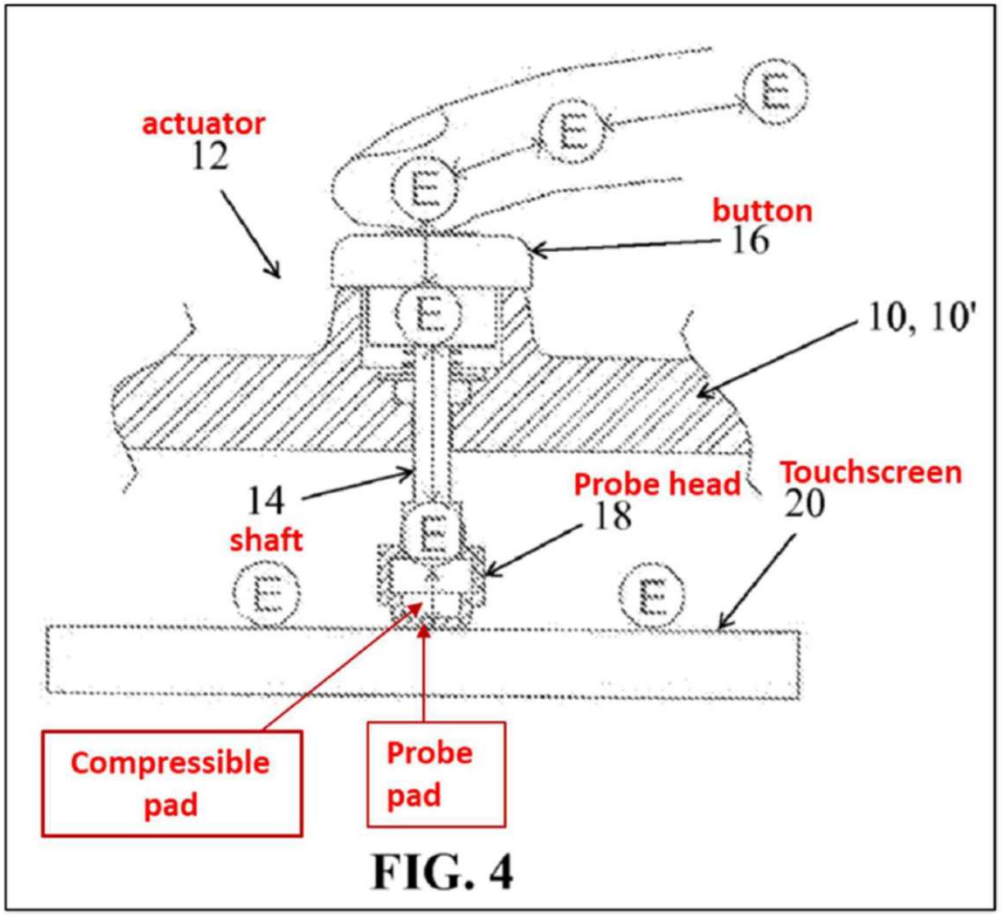

Reply p. 18; EX1004, Fig. 4.

Claim 12: Kondo/Chu disclose a lever

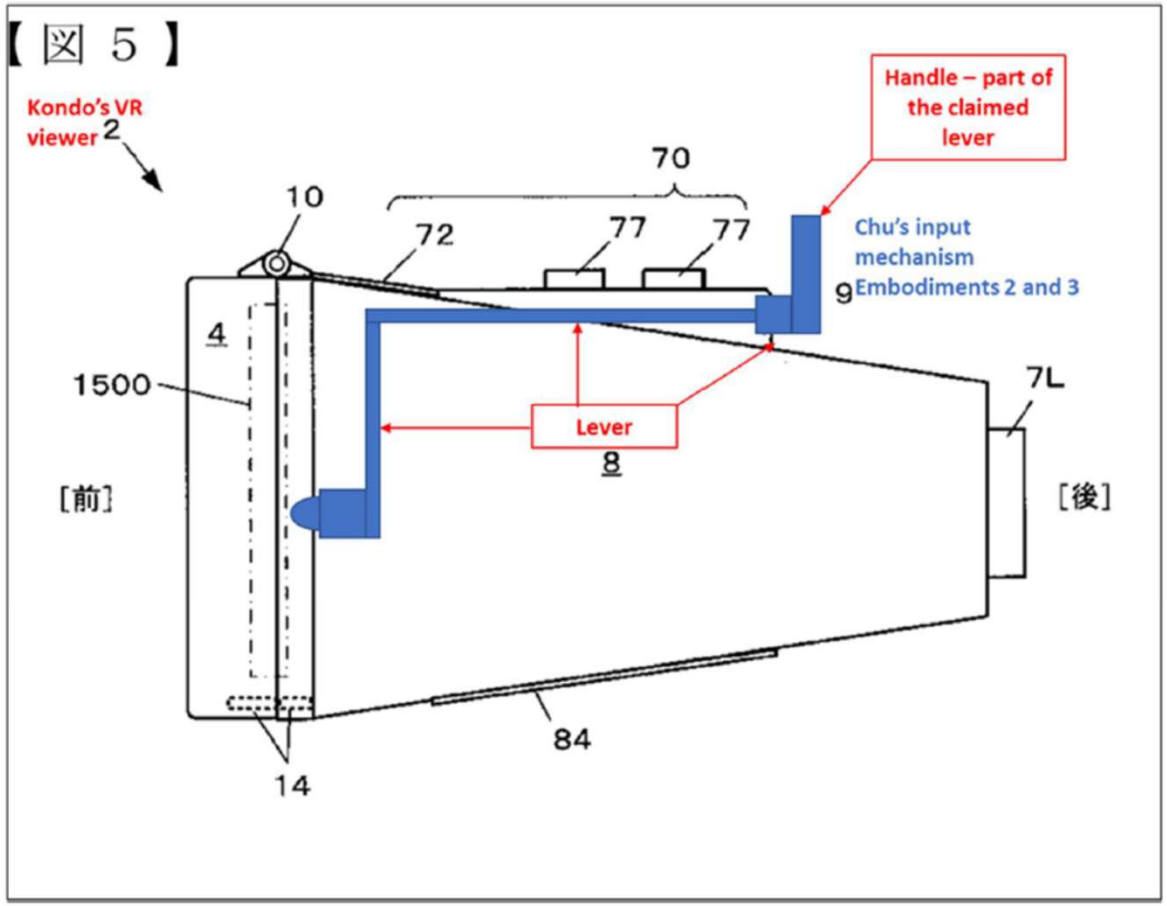

Pet., p. 99 (Chu's input device Embs. 2, 3 in Kondo's Fig. 5)

Claim 18: "disposed on" must encompass an indirect connection

18. A virtual reality viewer for use with a mobile electronic device having a capacitive touch-screen, the viewer comprising:

a housing configured to receive the mobile electronic device and substantially enclose the touch-screen within a generally hollow interior of the housing, wherein the housing holds the touch-screen in a position that is generally centered in a horizontal direction and directly in a user's field of view when viewing the touch-screen through a back wall of the housing, wherein the backwall is opposite the touch-screen and includes a left and a right lens for viewing a left region and a right region of the interior and the touch-screen;

an input device including,

a first portion that is accessible from an exterior of the housing, and

an elongate second portion disposed within the interior of the housing between the left and right regions wherein the second portion is generally oriented in a vertical direction that is perpendicular to the horizontal direction;

an electric shield,

wherein a first surface of the electric shield is disposed on the first portion and is electrically coupled to a second surface of the electric shield,

wherein the second surface is disposed on the second portion within the interior and is generally centered in the horizontal direction between the left and right regions, and wherein only the second surface of the electric shield is configured to contact a central portion of the touch-screen of the mobile electronic device and selectively transfer a capacitive touch input to the touch-screen in response to a user interaction with the first portion of the input mechanism.

EX1001, Cl. 18

Claim 18 (cont'd): "disposed on" must encompass an indirect connection

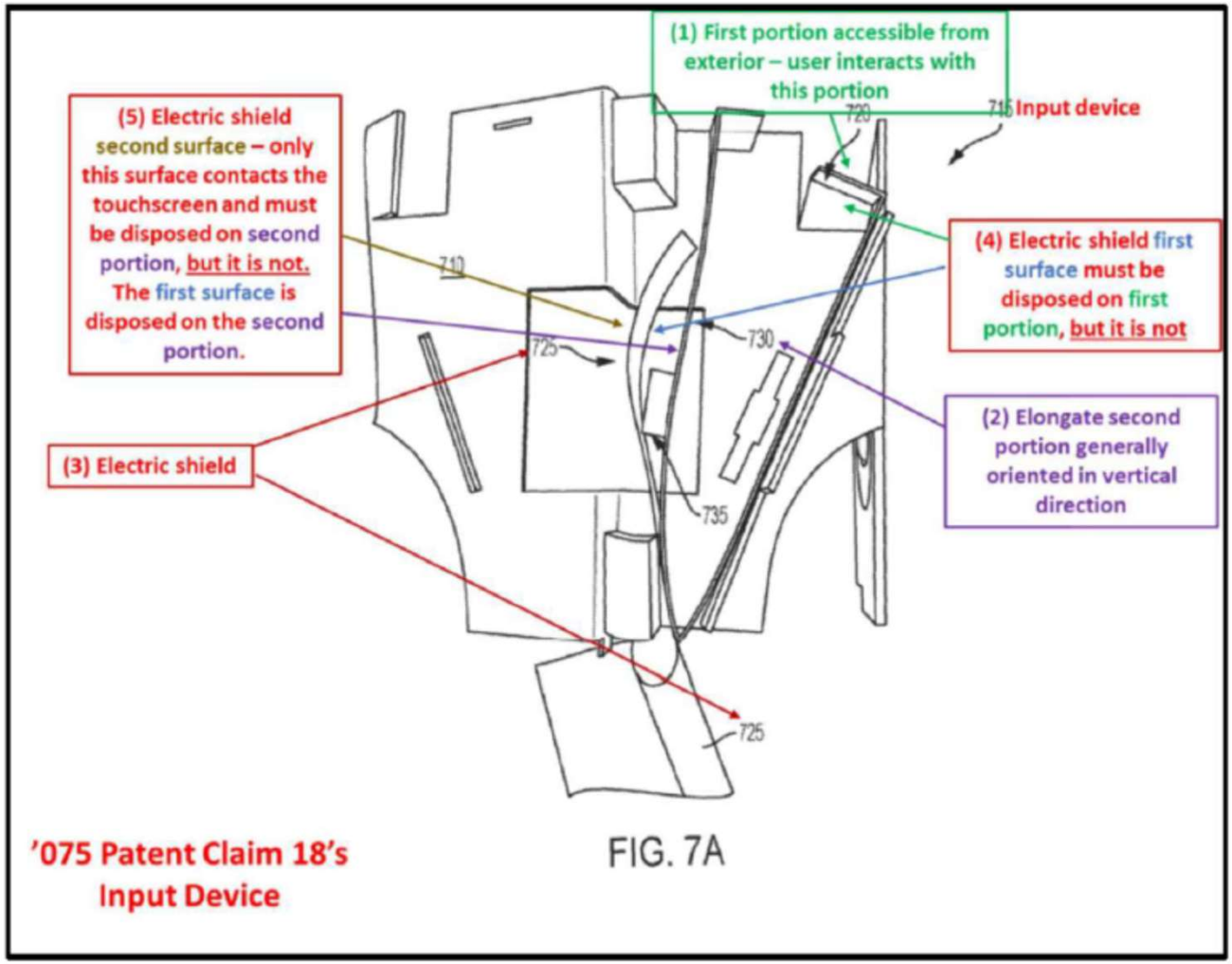

Pet., p. 101; EX1001, Fig. 7A.

Claim 18 (cont'd): "disposed on" must encompass an indirect connection

> In addition or alternatively, the portion of the metallized film that is configured to touch the screen can be accessible to receiving a user touch. For instance, a portion of the metallized film can be exposed on the lever **722** or otherwise accessible to the user on an external surface.

EX1001, 10:67-11:4; POR, p. 48.

CERTIFICATE OF SERVICE

The undersigned certifies service pursuant to 37 C.F.R. §§ 42.6(e) of PETITIONER'S DEMONSTRATIVE EXHIBITS FOR ORAL ARGUMENT by filing this document through the USPTO Patent Trial and Appeal Case Tracking System and by emailing a copy to the following email addresses:

cortneyalexander@kentrisley.com
haller@haller-iplaw.com

Respectfully Submitted,

Dated: August 5, 2024

Michael L. Kiklis_____

Michael L. Kiklis
Reg. No. 38,939
Attorney for Petitioner
Google LLC