IN THE UNITED STATES DISTRICT COURT
FOR THE NORTHERN DISTRICT OF TEXAS

DDC TECHNOLOGY, LLC, **Plaintiff,** **v.** **EMERGE TECHNOLOGIES, INC. (dba UTOPIA 360); STRUCTURAL GRAPHICS, LLC (dba RED PAPER PLANE); PYRITE VR LTD (dba MAXBOX VR); HMD TECH SARL (dba HOMIDO); LANDSBERG ORORA; and GOOGLE LLC,** **Defendants.**	**Case No.: 3:22-cv-01263** **JURY TRIAL DEMANDED**

COMPLAINT FOR PATENT INFRINGEMENT

Plaintiff DDC Technology, LLC complains of Defendants Emerge Technologies, Inc. (dba Utopia 360); Structural Graphics, LLC (dba Red Paper Plane); Pyrite Vr Ltd (dba Maxbox VR); HMD TECH SARL (dba Homido); Landsberg Orora; and Google LLC:

NATURE OF LAWSUIT

1. This is a claim for patent infringement arising under the patent laws of the United States, Title 35 of the United States Code.

THE PARTIES

2. DDC Technology, LLC ("DDC" or "Plaintiff") is a limited liability company formed and existing under the laws of the State of Delaware with a principal place of business in Austin, Texas.

3. DDC is the named assignee of, owns all right, title and interest in, and has standing to sue for infringement of United States Patent No. 9,420,075, entitled "Virtual Reality Viewer and Input Mechanism," which issued on August 16, 2016 ("the '075 Patent") (a true and correct

copy is attached as Exhibit A); United States Patent No. 9,811,184, entitled "Virtual Reality Viewer and Input Mechanism," which issued on November 7, 2017 ("the '184 Patent") (a true and correct copy is attached as Exhibit B); United States Patent No. 10,528,199, entitled "Virtual Reality Viewer and Input Mechanism," which issued on January 7, 2020 ("the '199 Patent") (a true and correct copy is attached as Exhibit C); United States Patent No. 11,093,000, entitled "Virtual Reality Viewer and Input Mechanism," which issued on August 17, 2021 ("the '000 Patent") (a true and correct copy is attached as Exhibit D); and United States Patent No. 11,093,001, entitled "Virtual Reality Viewer and Input Mechanism," which issued on August 17, 2021 ("the '001 Patent") (a true and correct copy is attached as Exhibit E) (collectively, the "Asserted Patents").

4. The Asserted Patents were invented by Patrick Buckley. Mr. Buckley co-founded DODOcase, Inc. ("DODOcase") in the basement of Mr. Buckley's home with the mission of making mobile device accessories that were built by local craftsman. Mr. Buckley assigned the Asserted Patents to DODOcase.

5. In 2014, DODOcase anticipated a growing mobile device accessories market, particularly for affordable virtual reality accessories that worked with smartphones. Mr. Buckley, an MIT trained mechanical engineer and inventor of multiple patents, recognized breakthrough improvements that could be made to then-existing smartphone virtual reality accessories and filed for patent protection for an innovative way to make a low-cost virtual reality input system for touchscreen devices.

6. For seven years, DODOcase manufactured and sold mobile device accessories, most of which were built and/or assembled in a factory DODOcase built in San Francisco. DODOcase launched four virtual reality smartphone accessories in 2014 and sold over one-million

smartphone virtual reality viewers (and millions of other products), becoming recognized globally as a premium brand for mobile accessories.

7. In 2016, DODOcase was forced to abandon the sale and production of products that used its own patented technology because of severe price pressures resulting from infringers importing competitive products.

8. Due to mounting costs and expenses resulting from extensive litigation in Federal District Court, the Federal Circuit Court of Appeals, and the Patent Trial and Appeal Board, on or about October 16, 2018, the Asserted Patents were assigned to DDC by DODOcase. As part of that assignment, DODOcase retained a financial interest related to recoveries from enforcement of the Asserted Patents.

9. Based upon public information, Emerge Technologies, Inc. (dba Utopia 360) ("Emerge") is a Texas corporation with a registered business address at 955 Freeport Parkway, Suite 100, Coppell, Texas 75019.

10. Based upon public information, Structural Graphics, LLC (dba Red Paper Plane) ("Structural Graphics") is a Delaware limited liability company with a sales office located in Dallas, Texas (with a production warehouse located in Eagle Pass, Texas).

11. Based upon public information, Pyrite Vr Ltd (dba Maxbox VR) ("Pyrite") is a United Kingdom private limited company with its registered office at 36 Scotts Road, Bromley, England, BR1 3QD.

12. Based upon public information, HMD TECH SARL (dba Homido) ("Homido") is a French limited liability company with an address at Lieu dit Bordustard, 56360 Le Palais, France (previous address at 33 Rue Victor Tilmant, 59000 Lille, France).

13. Based upon public information, Landsberg Orora ("Landsberg") is a California corporation with at least one physical place of business in this Judicial District located at 4151 Highway 121 N, Grapevine, Texas 76051.

14. Based upon public information, Google LLC ("Google") is a Delaware limited liability company with at least one physical place of business in this Judicial District located at 15303 Dallas Parkway, Addison, Texas 75001.

15. Emerge, Structural Graphics, Pyrite, Homido, Landsberg, and Google are herein referred to collectively as "Defendants".

16. Defendant Emerge – under the brand name Utopia 360 – makes and/or has made, imports (and/or has imported), uses, offers to sell and/or sells (and/or offered to sell and sold) Emerge Accused Products, as further identified below, which activities are accused of directly infringing claims of each of the Asserted Patents. Specifically, the manufacture, import, use, offer of sale, and sale of Emerge's Utopia 360° VR Headset ("Utopia Viewer") infringes claims of each of the Asserted Patents. In addition to its direct infringement, Emerge induced and induces others to infringe claims of each of the Asserted Patents at least by inducing third parties to "RESELL OUR PRODUCTS" including the Emerge Accused Products. (See https://emergetechnologies.com/default.aspx).

17. Defendant Structural Graphics – under the brand name Red Paper Plane – makes and/or has made, imports (and/or has imported), uses, offers to sell and/or sells (and/or offered to sell and sold) Structural Graphics Accused Products, as further identified below, which activities are accused of directly infringing claims of each of the Asserted Patents. Specifically, the manufacture, import, use, offer of sale, and sale of Structural Graphics' SleekPeeks® Cardboard VR Viewer ("SleekPeeks Cardboard Viewer") infringes claims of each of the Asserted Patents. In

addition to its direct infringement, Structural Graphics induced and induces others to infringe claims of each of the Asserted Patents at least by inducing third parties to have custom Structural Graphics Accused Products made in bulk for promotional purposes. (See https://www.redpaperplane.com/creative-direct-mail/custom-vr-viewers/sleekpeeks-cardboard-vr-viewer.html).

18. Defendant Pyrite – under the brand name Maxbox VR – makes and/or has made, imports (and/or has imported), uses, offers to sell and/or sells (and/or offered to sell and sold) Pyrite Accused Products, as further identified below, which activities are accused of directly infringing claims of each of the Asserted Patents. Specifically, the manufacture, import, use, offer of sale, and sale of Pyrite's Standard Branded Google Cardboard (Inspired) V2, Deluxe Custom VR Google Cardboard (Inspired) V2, and Adjustable Lenses Google Cardboard (Inspired) virtual reality viewers ("Maxbox Cardboard Viewers") infringes claims of each of the Asserted Patents. In addition to its direct infringement, Pyrite induced and induces others to infringe claims of each of the Asserted Patents at least by inducing third parties to have custom Pyrite Accused Products made in bulk for promotional purposes. (See https://www.maxboxvr.com/products/#pre-assembled).

19. Defendant Homido makes and/or has made, imports (and/or has imported), uses, offers to sell and/or sells (and/or offered to sell and sold) Homido Accused Products, as further identified below, which activities are accused of directly infringing claims of each of the Asserted Patents. Specifically, the manufacture, import, use, offer of sale, and sale of Homido's Grab and V2 virtual reality viewers ("Homido Viewers") infringes claims of each of the Asserted Patents. Homido advertises its Grab viewer as "Google Cardboard (WWGC) certified" and "developed in partnership with Google." (See https://homido.com/en/product/homido-grab-2/).

20. Defendant Landsberg makes and/or has made, imports (and/or has imported), uses, offers to sell and/or sells (and/or offered to sell and sold) Landsberg Accused Products, as further identified below, which activities are accused of directly infringing claims of each of the Asserted Patents. Specifically, upon information and belief, Landsberg manufactured the Google Cardboard V2 Viewer on behalf of Google, a direct infringement of claims of each of the Asserted Patents. Moreover, the manufacture, import, use, offer of sale, and sale of Landsberg's (non-Google) cardboard virtual reality viewers ("Landsberg Cardboard Viewer") infringes claims of each of the Asserted Patents. In addition to its direct infringement, Landsberg induced and induces others to infringe claims of each of the Asserted Patents at least by inducing third parties to have custom Landsberg Accused Products made in bulk for promotional purposes. (See https://www.landsberg.com/us/en/resources/virtual-viewers.html).

21. Defendant Google made and/or had made, imported, used, offered to sell and/or sold, and used Google Accused Products, as further identified below, which activities are accused of directly infringing claims of each of the Asserted Patents. Specifically, the manufacture, import, use, offer of sale, and sale of Google Cardboard (I/O 2015 Edition) Version 2 Virtual Reality Viewer ("Google Cardboard V2 Viewer") directly infringes claims of each of the Asserted Patents. In addition to its direct infringement, Google induced and continues to induce others – including each of the other Defendants, as well as an unknown number of other manufacturers/sellers of virtual reality viewers similar to the Accused Products – to infringe claims of each of the Asserted Patents as set forth in detail below.

JURISDICTION AND VENUE

22. This Court has exclusive jurisdiction over the subject matter of the Complaint under 28 U.S.C. §§ 1331 and 1338(a).

23. Personal jurisdiction is proper in this Court with respect to each Defendant. Emerge is organized under the laws of the State of Texas and conducts business in this Judicial District (including through sales and offers for sale of the Utopia Viewer in this Judicial District). Structural Graphics conducts business in this Judicial District (including through sales and offers for sale of the SleekPeeks Cardboard Viewer in this Judicial District). Pyrite is a foreign entity subject to personal jurisdiction in this Judicial District and, upon information and belief, offers to sell and sells the Maxbox Cardboard Viewers in this Judicial District. Homido is a foreign entity subject to personal jurisdiction in this Judicial District and, upon information and belief, offers to sell and sells the Homido Viewers in this Judicial District. Landsberg maintains a place of business in this Judicial District and conducts business in this Judicial District (including through sales and offers for sale of the Landsberg Cardboard Viewer in this Judicial District). Google maintains a place of business in this Judicial District and induced/continues to induce Defendants to infringe claims of each of the Asserted Patents, at least through sales and offers for sale of the Accused Products in this Judicial District.

24. Venue in this judicial district is proper under 28 U.S.C. § 1400(b). Emerge resides in this Judicial District as confirmed by its incorporation and principal place of business in this Judicial District, and the packaging of the Utopia Viewer states: "Manufactured by Emerge Technologies, Inc., 1431 Greenway Drive, Suite 800 Irving, TX 75038." Structural Graphics maintains a sales office in this Judicial District. Pyrite and Homido are foreign entities rendering venue appropriate in this Judicial District. Landsberg maintains a physical place of business in this Judicial District. Google maintains a physical place of business in this Judicial District and induced and continues to induce Defendants' acts of infringement in this Judicial District.

TIMELINE OF RELEVANT DEVELOPMENTS

25. On or around June 25, 2014, Google launched a rudimentary version 1 virtual reality viewer known as "Google Cardboard" at its I/O Conference (the "GC V1 Viewer"). At that time, Google's GC V1 Viewers were designed to include only a *magnetic switch* to interact with the magnetometer/compass of a smartphone to cause an interaction between the GC V1 Viewer and the smartphone operating a VR application.

26. Google highlighted DODOcase during a Virtual Reality presentation at the I/O Conference on or around June 26, 2014, as the first company to sell a VR viewer based on the GC V1 Viewer. Mr. Buckley made contact with members of the Google Cardboard team on the last day of the conference to discuss sourcing lenses for VR viewers.

27. On July 1, 2014, Mr. Buckley met Andrew Nartker – co-founder and Project Manager Lead for Google Cardboard – in a business development focused meeting where Mr. Nartker asked DODOcase to alter its marketing copy and to share detailed sales information about the VR viewer it was selling.

28. On or around July 10, 2014, Mr. Buckley of DODOcase emailed Mr. Nartker and Clay Bavor of Google, stating: "I think we have a clever/elegant way to make a conductive tap button which has a couple advantages… [e]liminates a potential choking hazard for children … [c]ould work universally on all smartphones… [and it] could help make this a better holiday gift."

29. In response, on or around July 11, 2014, Mr. Nartker stated in email: "Conductive button: Agree this could have benefits. We experimented briefly with this but didn't fully refine. Alex [Kauffmann], one of our lead designers, has offered to visit DodoCase next week to share our tips here. Are you free next Weds afternoon/end of day? I'll try to join him as well if I can."

30. On July 16, 2014, DODOcase filed its first provisional application to which the Asserted Patents are related. (Exhibit F). Later that day, Mr. Buckley of DODOcase met with members of the Google Cardboard team to discuss his invention and other business matters.

31. On July 25, 2014, Mr. Buckley sent an email (with attached video clips) to Messrs. Nartker and Bavor, stating in pertinent part: "I am most excited by what I think is a breakthrough on a very simple conductive touch button for the cardboard viewer. Check out the attached video clips." The attached video clips showed a working prototype, based on the embodiments disclosed in the specification of the '075 Patent's first provisional application filed on July 16, 2014.

32. On July 26, 2014, Mr. Nartker – co-founder and Project Manager Lead for Google Cardboard – responded in an email to Mr. Buckley: "That button looks really neat! Thanks for sharing."

33. On July 27, 2014, Mr. Kauffmann – who "led all aspects of the design of Google's Cardboard viewer" – stated in an email to Mr. Buckley: "That's an ingenious button! Does it work consistently on a variety of phones? I'd love to play with it."

34. That same day, Mr. Bavor – computer scientist and Vice President of Virtual Reality/Augmented Reality at Google – wrote in an email to Mr. Buckley: "That button is genius."

35. On or around September 17, 2014, DODOcase launched the DODO V1.2 Viewer.

36. In October of 2014, Regan Arts published a book titled Beginner's Guide to Virtual Reality, which was packaged with the DODO V1.2 Viewer. That production resulted in 50,000 units shipped to customers across the United States.

37. In or around November 2014, Google provided DODOcase with a "Google confidential" document describing guidelines for "Google's Cardboard OEM Program" for its GC V1 Viewers.

38. In or around March 2015, Google provided DODOcase with a "Google Confidential" document titled: "Works With Google Cardboard: Program Compatibility Guidelines," which described Google's new Works With Google Cardboard ("WWGC") Program.

39. On or around April 1, 2015, Google created a "Google Confidential" Version 1.0 of a document titled: "Works with Google Cardboard: Viewer Profile and Badge Guidelines," which was provided to DODOcase.

40. On or around April 6, 2015, Google (via its "new business development manager" Dontae Rayford) accepted the DODO V1.2 Viewer into the WWGC Program.

41. To become a participant in the WWGC Program, DODOcase was required to send Google two samples of the DODO V1.2 Viewer for Google's evaluation. After receiving written approval of its admission into the WWGC Program, DODOcase was only then permitted to identify on its products/packaging that the DODO V1.2 Viewer "Works With Google Cardboard" and use the WWGC badge/logo. As a participant in the WWGC Program, DODOcase was required to provide Google with data regarding its sales and production volume of the DODO V1.2 Viewer, as well as identification of the sales channels used by DODOcase. Google reserved the right to terminate DODOcase from the WWGC Program at any time in its sole discretion.

42. Notably, DODOcase was admitted to the "Featured Device Tier" of the WWGC Program (a higher tier than the "Certified Device" and "Non-Certified Device" tiers), which required a commitment to production of 100,000 units within 6 months of launch and collaboration with Google.

43. On or around April 16, 2015, Google prepared the Version 1.0 of a document titled "Works with Google Cardboard Viewer Profile and Badge Guidelines." (Exhibit H). That document stated: "The 'Works with Google Cardboard' (WWGC) badge and term are designed to

indicate that a particular VR viewer has been certified by the manufacturer to be compatible with a Google Cardboard application ecosystem," and "[y]ou may use the Google Cardboard assets described below … if and only if you have been accepted to the WWGC Program and received a written approval from Google." That document further required: "If your viewer supports multiple platforms, the WWGC badge should be placed first in the lineup of badges, and should be of equal or greater size." Per that document: "If your viewer has been accepted to the WWGC Program and you have received a written approval from Google, you can use any of the following text with your viewer messaging: 'This [device] works with Google Cardboard' or 'Works with Google Cardboard.'" (See Exhibit H).

44. That document further detailed the process of applying to, and being accepted for, the WWGC Program. Specifically, potential participants were required to send two representative samples for evaluation and "[t]he chances of being accepted into the program are increased if your device: Does not have a headstrap" and "Has exactly one input (can be a magnet, a capacitive/conductive input, screen touch, Bluetooth or other type of input)." (Exhibit H).

45. That document suggested "[f]or other manufacturing guidelines, download the best practices kit for Google Cardboard-inspired devices." (Exhibit H).

46. On or around May 5, 2015, Google (via Rayford) notified DODOcase that Google would announce a version 2 Google Cardboard virtual reality viewer at its I/O 2015 conference.

47. On May 14, 2015, DODOcase filed a second provisional application to which the Asserted Patents are related. (Exhibit G).

48. On or around May 28, 2015, Google launched its Google Cardboard V2 Viewer, which was designed to replace the rudimentary magnet control mechanism of the GC V1 Viewer with a conductive/capacitive touch button.

49. On July 16, 2015, DODOcase filed Application No. 14/801,606 at the USPTO, which ultimately issued as the '075 Patent. (See Exhibit A).

50. On or around July 20, 2015, Google prepared several design documents for Google Cardboard VR Viewers including designs for a "Button – Conductive Pillow," (Exhibit I), "Button – Conductive Strip," (Exhibit J), "Lens," (Exhibit K), "Viewer – Body," (Exhibit L). The "Viewer – Body" designs highlight the location of the "Button":

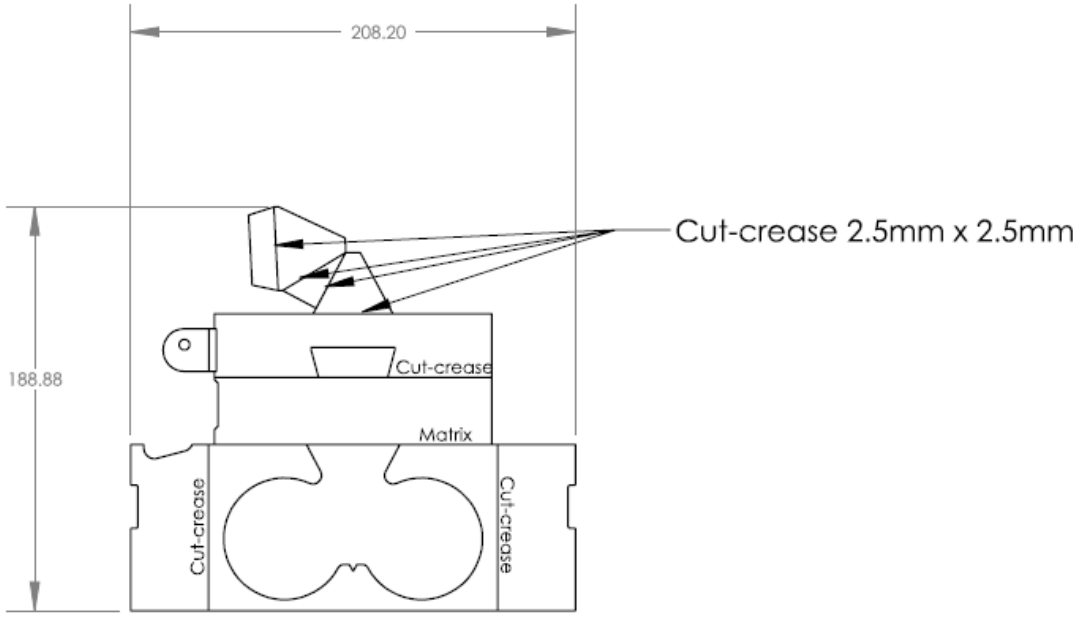

Button

(Exhibit L).

51. On or around July 30, 2015, Google released Version 1.0 of a document titled, "Google Cardboard (I/O 2015) Technical Specification" providing "the detailed technical specifications for the new Google Cardboard launched at Google I/O 2015." (Exhibit M).

52. That document provides "Design Specifications" that detail "the technical design specifications of Google Cardboard (I/O 2015 edition). It contains the detailed specifications for all major functional parts of Google Cardboard, including lenses, capacitive button, mechanical body, sleeve, oleophobic coating and printed artwork." (Exhibit M).

53. That document provides the following figures and specifications of the Google Cardboard V2 Viewer, with specific reference to the "conductive button":

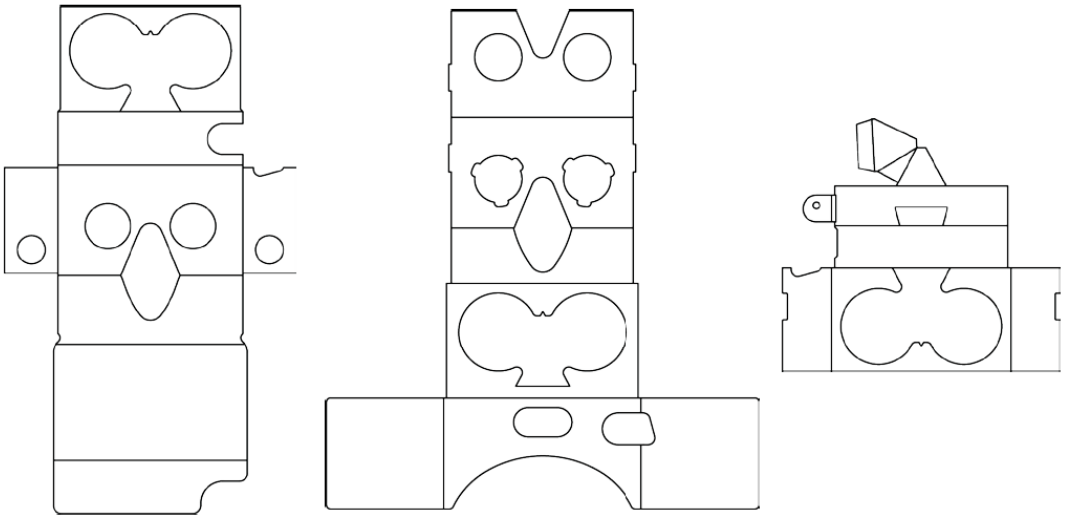

From left to right, Figure 2. Cardboard mechanical body: "chassis" part. Figure 3. Cardboard mechanical body: "t-shirt" part. Figure 4. Cardboard mechanical body: "button" part.

3.3. Button Specifications: Conductive Strip and Pillow

Google Cardboard (I/O 2015) button consists of two conductive parts ("pillow" and "strip"), glued to a cardboard-based "hammer".

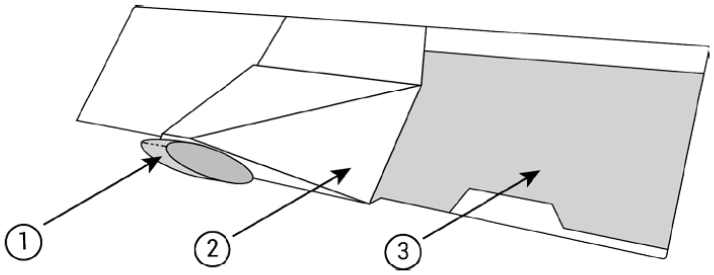

Figure 7. Cardboard button parts: (1) - "pillow", (2) - "hammer", (3) - "conductive strip"

3.3.1. Conductive Strip Specifications

Parameters	Value	Unit
Material	Metallized fabric (polyester Ni/Cu)	
Surface resistivity	< 0.03	Ω/sq.
Z-axis resistance	< 0.03	Ω

Table 6. Conductive strip specifications.

3.3.2. Conductive Pillow Specifications

Parameters	Value	Unit
Surface material	Metallized fabric (polyester Ni/Cu)	
Core material	Soft urethane foam	
Core surface resistivity	< 0.07	Ω/sq.
PSA type	Conductive	
PSA Z-axis resistance	< 0.05	Ω

Table 7. Conductive pillow specifications.

2. Button side flaps should have <0.5 x E-flute thickness misalignment, as it's critical for the button travel distance. If the units are assembled manually, the button side flaps should be aligned first.

4.4.2. Button Functionality

1. Various parts of the "hammer" should not come unglued. This can happen when the assembly stage takes too long and the glue dries up, or from not applying sufficient amounts of glue.

2. The button should be easily pushable down. After releasing it should spring back.
3. The conductive pillow should be centered within the phone-facing apertures, and the bottom edge of the conductive pillow should be lined up with the corresponding cardboard edge.

(Exhibit M).

54. In or around July of 2015, Google prepared a document titled "Cardboard V2 Artwork (1:1 Scale)," (Exhibit N), which showed the schematics and assembly instructions for the Google Cardboard V2 Viewer:

1. Isometric Viewer Diagram

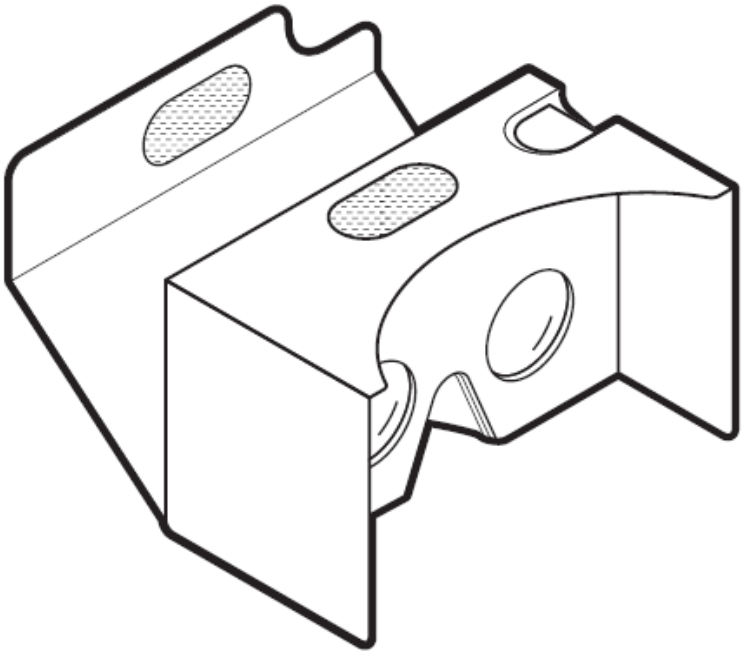

2. Isometric Assembly Instructions

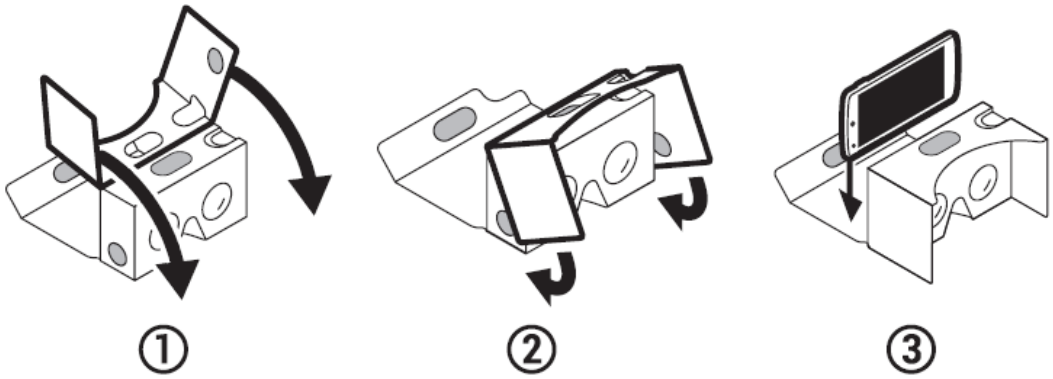

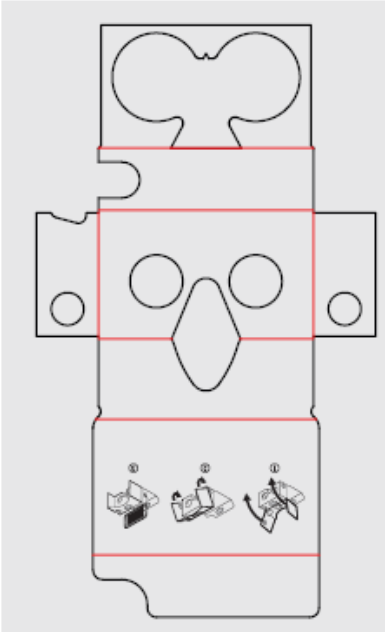

(Exhibit N).

55. On or around August 17, 2015, Google released Version 2.0 of a document titled, "Works with Google Cardboard Guidelines and Best Practices." (Exhibit O). Therein, Google states: "'Works with Google Cardboard' Program has been designed to indicate to users that a given virtual reality viewer has been certified by the manufacturer to meet Google standards" and "[t]his document describes the best practices and lessons for manufacturing virtual reality viewers that are compatible with Works with Google Cardboard ecosystem." "It includes guidelines for mechanical viewer components." (Exhibit O).

56. That document further links to "a set of specifications for manufacturing the new Google Cardboard (I/O 2015 edition)" that "can be found in the manufacturing template collection

(wwgc_manufacturers_kit_v2.0.zip)," with an embedded link to the materials provided as https://google.com/cardboard/downloads/wwgc_manufacturers_kit_2.0.zip. (Exhibit O).[1]

57. That document provides "Viewer guidelines" "for individual components of a typical 'Works with Google Cardboard' viewer" including the (1) – input, (2) – enclosure, and (3) – lenses:

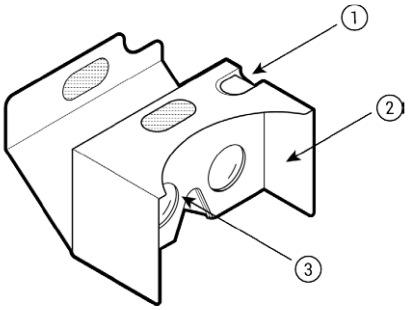

Figure 1. Typical components of a WWGC viewer: (1) - input, (2) - enclosure, (3) - lenses.

(Exhibit O).

58. That document further describes the recommendations for the "Input" including that the "viewer should contain exactly one input" and the "viewer can use different types of inputs" including "conductive and capacitive inputs" (with the additional recommendation that, "[i]f you're using a conductive input which passes user's body charge onto the smartphone screen, ensure that the input is not touching the screen in a 'non-pressed' state."). (Exhibit O).

59. That document further states: "Google Cardboard (I/O 2015 edition) uses 34 mm diameter aspherical singlet lenses," with a link to the "exact specification and technical drawings of these lenses in wwgc_manufacturers_kit_v2.0.zip template collection," with an embedded link

[1] It appears the previously active link provided in Exhibit O is no longer active. However, Google provides a Cardboard Manufacturers Kit for download here: https://arvr.google.com/cardboard/pdfs/gc_manufacturers_kit.zip and a Best Practices Kit for download here: https://gstatic.com/cardboard_assets/cardboard_manufacturers_kit.zip.

to the materials provided as https://google.com/cardboard/downloads/wwgc_manufacturers_kit_2.0.zip (Exhibit O).

60. That document further provides: "You are allowed to use any of the following approved text on your website or printed materials to refer to Google Cardboard:" "This [XYZ VR headset] was inspired by Google Cardboard" or "Inspired by Google Cardboard." (Exhibit O).

61. The document then detailed the application process for applying to the WWGC Program, including submission of two representative samples for Google's evaluation. (Exhibit O).

62. The "Change Log" of that document identifies a Version 1.0 from December 10, 2014, with "Initial manufacturing guidelines for Google Cardboard v1.1" and a Version 1.2 from April 16, 2015, which only "[a]dded information about the 'Works with Google Cardboard' Program." The Version 2.0 change on August 17, 2015, was the first change that was "[u]pdated to incorporate the new Google Cardboard (I/O 2015 edition) specifications." (Exhibit O).

63. As presently advised, at least as early as May 2016, Google was falsely representing to the public that the Google Cardboard V2 Viewer was "open source." (Exhibit P). To present, Google continues to advertise the Google Cardboard V2 Viewer as "open-source." (See Exhibit Q).

64. Specifically, Google represented, and continues to represent, to the public that the "Specifications for viewer design" are "open-source" and free for the public to use: "Use the Google Cardboard open-source specifications in this Help Center to create your own Cardboard-inspired viewer. The sections below explain the various specs and product tolerances for each part of the Cardboard viewer. For easier distribution within manufacturing teams, you may also find it

useful to download the full Cardboard Manufacturers Kit of specifications and tolerances" (with a link to https://google.com/get/cardboard/downloads/wwgc_manufacturers_kit.zip)[2]. (Exhibit Q).

65. Specifically, that document provides specific reference to the "button on a Google Cardboard viewer consist[ing] of two conductive parts ('pillow' and 'strip'), glued to a cardboard-based 'hammer'" and detailed specifications and tolerances for the conductive "pillow" and "strip":

Buttons

The button on a Google Cardboard viewer consists of two conductive parts ("pillow" and "strip"), glued to a cardboard-based "hammer".

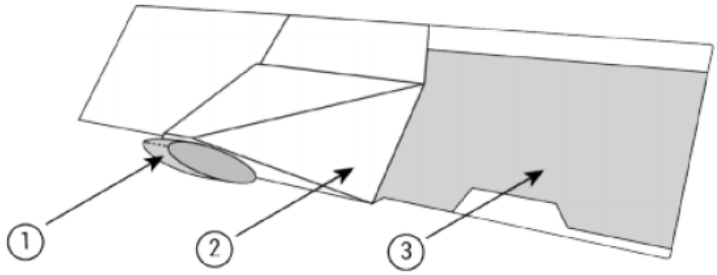

Cardboard button parts: (1) - "pillow", (2) - "hammer", (3) - "conductive strip

Conductive strip specifications

Parameters	Value	Unit
Material	Metallized fabric (polyester Ni/Cu)	
Surface resistivity	< 0.03	Ω/sq.
Z-axis resistance	< 0.03	Ω

[2] It appears the previously active link provided in Exhibit Q is no longer active. However, Google provides a Cardboard Manufacturers Kit for download here: https://arvr.google.com/cardboard/pdfs/gc_manufacturers_kit.zip and a Best Practices Kit for download here: https://gstatic.com/cardboard_assets/cardboard_manufacturers_kit.zip.

Conductive pillow specifications

Parameters	Value	Unit
Surface material	Metallized fabric (polyester Ni/Cu)	
Core material	Soft urethane foam	
Core surface resistivity	< 0.07	Ω/sq.
PSA type	Conductive	
PSA Z-axis resistance	< 0.05	Ω

(Exhibit Q).

THE CARDBOARD ACCUSED PRODUCTS

Google Accused Products

66. Google directly infringed the Asserted Patents at least by making or having made, importing or having imported, using, offering to sell, and/or selling its Google Cardboard V2 Viewer. As presently advised, in or around March of 2021, Google stopped selling its Google Cardboard V2 Viewer. DDC will require discovery to ascertain the exact date that Google ceased direct infringement of the Asserted Patents and reserves the right to amend this Complaint in accordance with newly discovered evidence.

67. A YouTube video titled "Hands-on with Google's New Cardboard 2 Virtual Reality Viewer," available at https://www.youtube.com/watch?v=eZ1pwIxTw5Q, (the "Google Cardboard V2 Viewer Video"), demonstrates the general functionality and features of the Google Cardboard V2 Viewer. A Google document titled "Google Cardboard (I/O 2015) Technical Specification July 2015, v2.0," (Exhibit R), provides the detailed technical specifications for the Google Cardboard V2 Viewer.

68. The Google Cardboard V2 Viewer included a conductive touch button:

(Google Cardboard V2 Viewer Video at 1:39).

3.3. Button Specifications: Conductive Strip and Pillow

Google Cardboard (I/O 2015) button consists of two conductive parts ("pillow" and "strip"), glued to a cardboard-based "hammer".

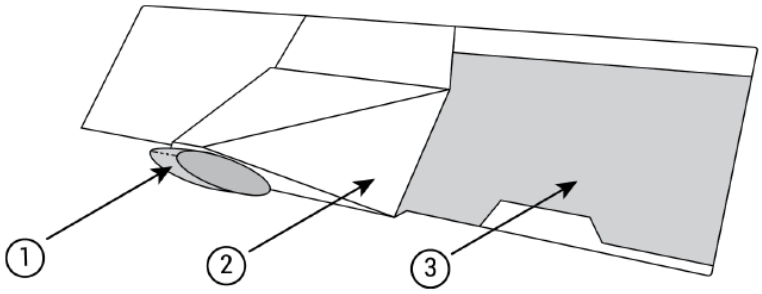

Figure 7. Cardboard button parts: (1) - "pillow", (2) - "hammer", (3) - "conductive strip"

(Exhibit R, pp. 9-10 of 22).

(Exhibit R, p. 21 of 22).

69. The Google Cardboard V2 Viewer was a virtual reality viewer designed to operate with a mobile electronic device having a touchscreen (*e.g.*, "smartphone"):

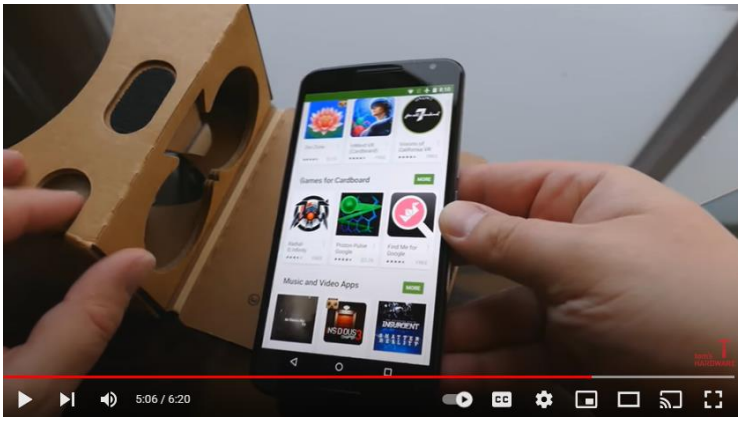

(Google Cardboard V2 Viewer Video at 5:06).

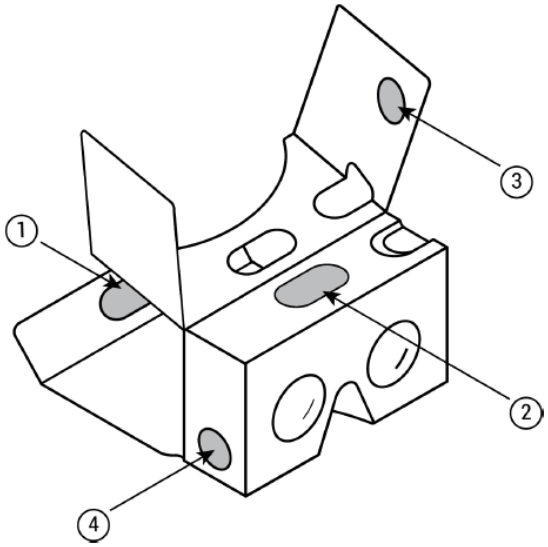

Figure 8. Hook-and-loop fasteners as used in Google Cardboard: (1) - oval "loop" fastener, (2) - oval "hook" fastener,, (3) - round "loop" fastener, (4) - round "hook" fastener

(Exhibit R, p. 11 of 22).

3.5. Rubber Band Specifications

The back flap part of a Google Cardboard contains a rubber band. The rubber band increases the friction between the phone's bottom surface and the back flap, thereby reducing the chance of the phone's slippage as illustrated below.

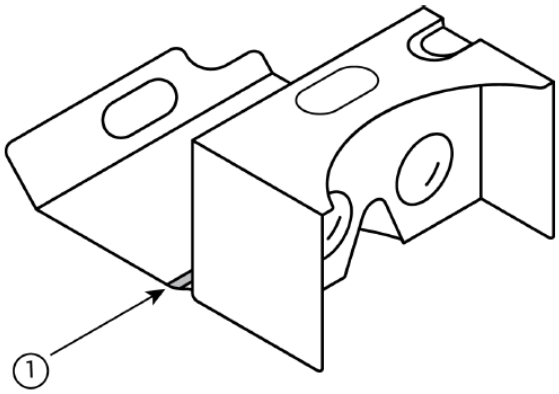

Figure 9. (1) - rubber band location on Google Cardboard

(Exhibit R, p. 12 of 22).

The conductive pillow should be centered within the phone-facing apertures, and the bottom edge of the conductive pillow should be lined up with the corresponding cardboard edge.

(Exhibit R, p. 20 of 22).

70. The Google Cardboard V2 Viewer included two lenses for viewing the mobile electronic device:

(Google Cardboard V2 Viewer Video at 3:08).

3.1. Lens Optical Design Specifications

Google Cardboard (I/O 2015 edition) contains custom designed, 80° FOV, 34 mm diameter lenses.

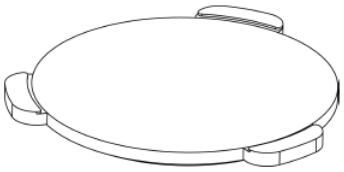

Figure 1: Google Cardboard (I/O 2015 edition) lenses.

(Exhibit R, p. 6 of 22).

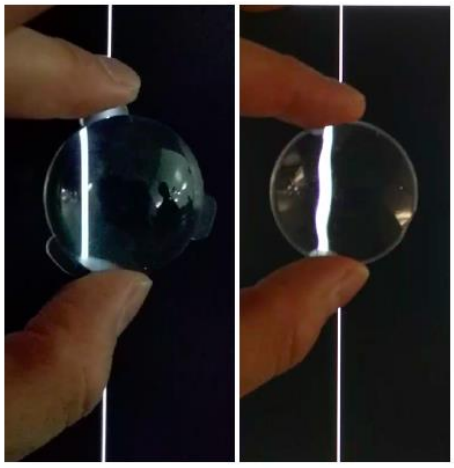

Figure 14. First example of lens visual verification: left - good lens, right - bad lens (notice the wavy distortions of the straight line on the lens surface).

(Exhibit R, p. 17 of 22).

All layers of cardboard lens cutouts should line up and the outlines should have <1 x E-flute thickness of misalignment. Lens tabs should not be visible.

(Exhibit R, p. 19 of 22).

71. The Google Cardboard V2 Viewer comprised a housing configured to receive and hold the mobile electronic device such that the touchscreen was generally centered in a horizontal direction directly in a user's field of view:

(Google Cardboard V2 Viewer Video at 5:53).

> The conductive pillow should be centered within the phone-facing apertures, and the bottom edge of the conductive pillow should be lined up with the corresponding cardboard edge.

(Exhibit R, p. 20 of 22).

72. The Google Cardboard V2 Viewer included an input mechanism that was accessible on the exterior:

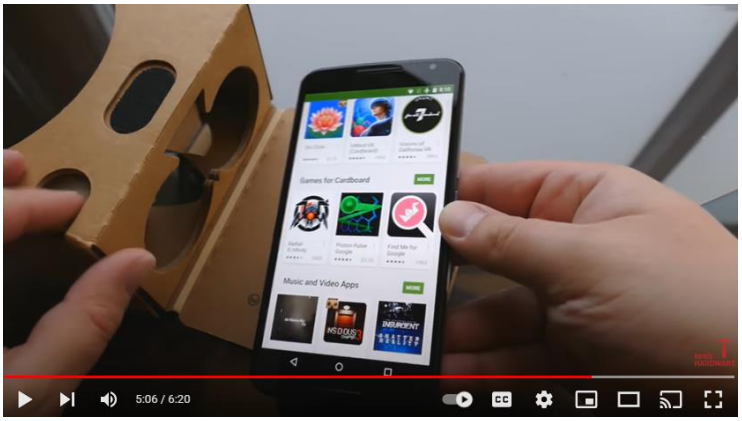

(Google Cardboard V2 Viewer Video at 5:06).

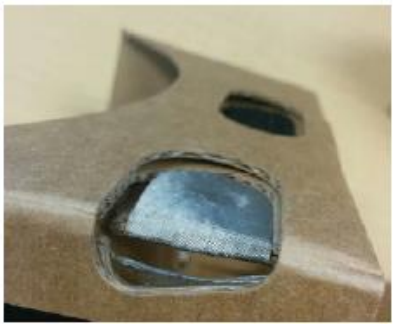

(Exhibit R, p. 21 of 22).

73. The Google Cardboard V2 Viewer used "capacitive"/"conductive" technology (to create a touch event on the touchscreen of a mobile electronic device), when the "button" or "pillow" was in a second (or extended) position such that it was configured to contact (and, in fact, contacted), the touchscreen of the mobile electronic device within the virtual reality viewer housing:

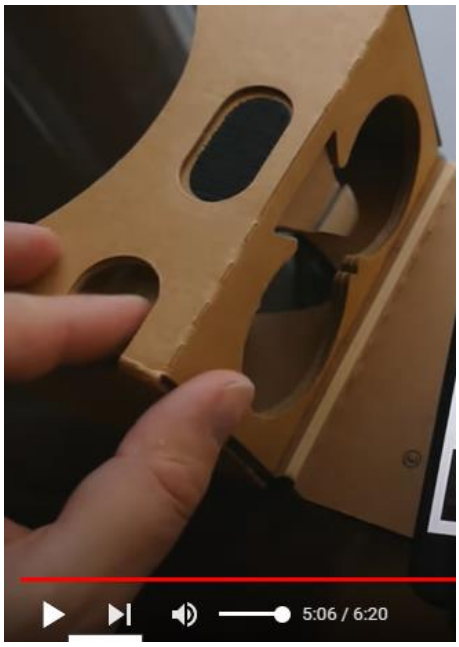

(Google Cardboard V2 Viewer Video at 5:06).

74. The definition of Google Accused Products includes all products substantively similar to the Google Cardboard V2 Viewer (including other virtual reality viewers that comprise a conductive/capacitive touch "button" for use with a touchscreen of a mobile electronic device).

75. After adequate discovery, DDC may seek leave to amend this Complaint to include additional details of infringement, if any, and may identify other products hereafter discovered to infringe the Asserted Patents.

Landsberg Accused Products

76. Upon information and belief, Landsberg directly infringed the Asserted Patents by manufacturing the Google Cardboard V2 Viewers on behalf of Google. As support for that information and belief, DDC identifies Exhibit S, which states: "Cardboard [Google's GC V1 Viewer, with magnet] was conceived, designed and produced by … Alex Kauffmann … Andrew Nartker, and Clay Bavor at Google with significant production assistance from Aaron Thompson (Landsberg)."

77. Notably, the Messrs. Kauffmann, Nartker, and Bavor identified as the "conceivers/designers/producers" of the GC V1 Viewer are the same three Google employees who emailed Mr. Buckley of DODOcase in July 2014, reacting to Mr. Buckley's working prototype of the claimed inventions with enthusiasm and accolades:

- "That's an ingenious button! Does it work consistently on a variety of phones? I'd love to play with it."
- "That button looks really neat!"
- "That button is genius."

78. Similarly, Exhibit T further suggests that the GC V1 Viewer was partially designed, developed, and manufactured by Landsberg: "Designers at Landsberg Orora in San Jose, US had

to dream big when they were challenged to help develop and deliver a virtual reality (VR) viewer made out of cardboard. Orora's designers collaborated desk-to-desk with the customer's [presumably Google's] design team to discuss strategy, form and structure…. A dedicated team was formed and spent countless hours planning to execute this total packaging solution. With Landsberg Orora's complete packaging capabilities, we were not only able to help design the viewers, but also create prototypes, manufacture the viewers, assemble and ship them."

79. Landsberg further directly infringed, and continues to infringe, the Asserted Patents at least by making or having made, importing or having imported, using, offering to sell, and/or selling its Landsberg Cardboard Viewer, which includes a "button" that uses capacitive/conductive touch technology to interact with the touchscreen of a smartphone.

(Exhibit U).

80. Landsberg's webpage advertises the Landsberg Cardboard Viewer with the "Works With Google Cardboard" badge in the orange color described by Google as "primary" and directed to be used "whenever possible."

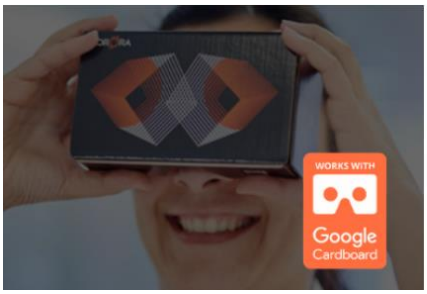

We have provided millions of high-quality cardboard viewers to Fortune 500 companies, small businesses & other companies looking to take their marketing campaigns to new levels. Each custom virtual reality viewer we design & manufacture is certified to work with Google Cardboard. Our design teams partner with you to develop a cutting-edge visual design on the highest-quality corrugated material. From there, our teams can print, manufacture, assemble & ship viewers for your target marketing campaigns.

Our full-service custom VR viewer solutions provide you with:

- Custom Printing: 1 to 6 color printing & litho label options available
- Prototypes: Available in 2 weeks or less
- Lead times: As low as 3 weeks

(Exhibit U).

Orange is the primary WWGC badge color. Use it whenever possible.

WWGC Orange
RGB - R255, G110, B64
CMYK - C0, M71, Y79, K0
Web - #FF6E40
Pantone - 1645 C

(Exhibit H, p. 8).

81. Accordingly, as presently advised, the Landsberg Cardboard Viewer is designed and manufactured in accordance with the specifications set forth in Google's WWGC Program documentation and includes the same features as the Google Cardboard V2 Viewer identified in ¶¶ 66-74, see also, ¶¶ 50-65, *supra*.

82. Specifically, the Landsberg Cardboard Viewer includes a conductive touch button; is designed to operate with a mobile electronic device having a touchscreen (*e.g.*, "smartphone"); includes two lenses for viewing the mobile electronic device; comprises a housing configured to receive and hold the mobile electronic device such that the touchscreen is generally centered in a horizontal direction directly in a user's field of view; includes an input mechanism accessible on

the exterior; and uses capacitive/conductive technology to create a touch event on a mobile electronic device when the button is in a second position. (See ¶¶ 66-74, see also, ¶¶ 50-65, *supra*).

83. The definition of Landsberg Accused Products includes all products substantively similar to the Landsberg Cardboard Viewer (including other virtual reality viewers that comprise a conductive/capacitive touch "button" for use with a touchscreen of a mobile electronic device).

84. After adequate discovery, DDC may seek leave to amend this Complaint to include additional details of infringement, if any, and may identify other products hereafter discovered to infringe the Asserted Patents.

<u>Pyrite Accused Products</u>

85. Pyrite directly infringed, and continues to infringe, the Asserted Patents at least by making or having made, importing or having imported, using, offering to sell, and/or selling its Maxbox Cardboard Viewers, which include a "button" that uses capacitive/conductive touch technology to interact with the touchscreen of a smartphone.

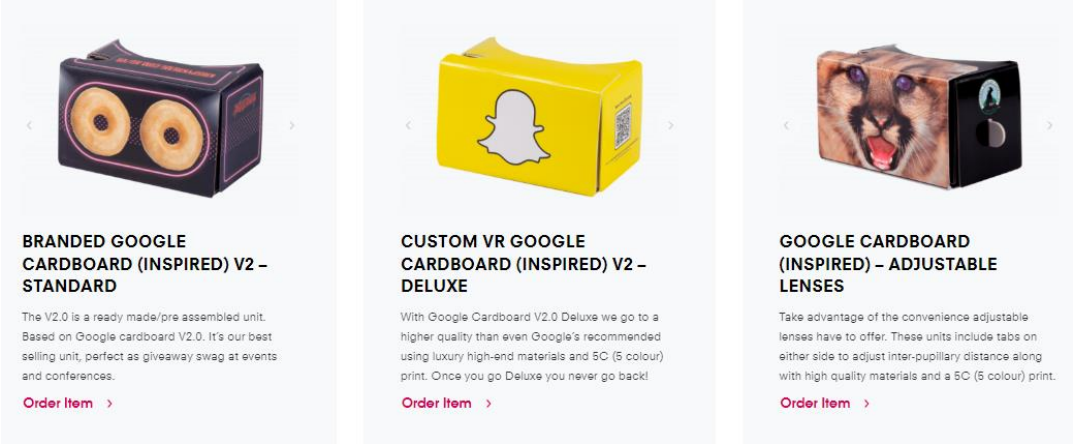

(Exhibit V).

86. As presently advised, Maxbox Cardboard Viewers were certified by Google in the WWGC Program; notably, Pyrite titles the Maxbox Cardboard Viewers "Google Cardboard

(Inspired)" and specifically states on its website that the "Developer" of each of the Maxbox Cardboard Viewers is "Google."

	FLATPACK V2.1	VR SLIM™	V3.1 – MAXBOX VR™	BRANDED GOOGLE CARDBOARD (INSPIRED) V2 – STANDARD	CUSTOM VR GOOGLE CARDBOARD (INSPIRED) V2 – DELUXE	GOOGLE CARDBOARD (INSPIRED) – ADJUSTABLE LENSES
Developer	Maxbox VR™	Maxbox VR™	Maxbox VR™	Google	Google	Google

(Exhibit W).

87. Accordingly, as presently advised, each Maxbox Cardboard Viewer is designed and manufactured in accordance with the specifications set forth in Google's WWGC Program documentation and includes the same features as the Google Cardboard V2 Viewer identified in ¶¶ 66-74, see also, ¶¶ 50-65, *supra*.

88. Specifically, each Maxbox Cardboard Viewer includes a conductive touch button; is designed to operate with a mobile electronic device having a touchscreen (*e.g.*, "smartphone"); includes two lenses for viewing the mobile electronic device; comprises a housing configured to receive and hold the mobile electronic device such that the touchscreen is generally centered in a horizontal direction directly in a user's field of view; includes an input mechanism accessible on the exterior; and uses capacitive/conductive technology to create a touch event on a mobile electronic device when the button is in a second position. (See ¶¶ 66-74, see also, ¶¶ 50-65, *supra*).

89. The definition of Pyrite Accused Products includes all products substantively similar to the Maxbox Cardboard Viewers (including other virtual reality viewers that comprise a conductive/capacitive touch "button" for use with a touchscreen of a mobile electronic device).

90. After adequate discovery, DDC may seek leave to amend this Complaint to include additional details of infringement, if any, and may identify other products hereafter discovered to infringe the Asserted Patents.

Structural Graphics Accused Products

91. Structural Graphics directly infringed, and continues to infringe, the Asserted Patents at least by making or having made, importing or having imported, using, offering to sell, and/or selling its SleekPeeks Cardboard Viewer, which includes a "button" that uses capacitive/conductive touch technology to interact with the touchscreen of a smartphone.

(Exhibit X, pp. 2-3).

92. A YouTube video titled "RPP [Red Paper Plane] Cardboard Viewer," available at https://www.youtube.com/watch?v=nGtsvWBni2M, (the "SleekPeeks Cardboard Viewer Video"), demonstrates the general functionality and features of the SleekPeeks Cardboard Viewer.

93. The body of the SleekPeeks Cardboard Viewer includes the "Works With Google Cardboard" badge in the orange color described by Google as "primary" and directed to be used "whenever possible":

(SleekPeeks Cardboard Viewer Video at 0:10).

Orange is the primary WWGC badge color. Use it whenever possible.

WWGC Orange
RGB - R255, G110, B64
CMYK - C0, M71, Y79, K0
Web - #FF6E40
Pantone - 1645 C

(Exhibit H, p. 8).

94. Accordingly, as presently advised, the SleekPeeks Cardboard Viewer is designed and manufactured in accordance with the specifications set forth in Google's WWGC Program documentation and includes the same features as the Google Cardboard V2 Viewer identified in ¶¶ 66-74, see also, ¶¶ 50-65, *supra*.

95. Specifically, the SleekPeeks Cardboard Viewer includes a conductive touch button; is designed to operate with a mobile electronic device having a touchscreen (*e.g.*, "smartphone"); includes two lenses for viewing the mobile electronic device; comprises a housing configured to receive and hold the mobile electronic device such that the touchscreen is generally centered in a horizontal direction directly in a user's field of view; includes an input mechanism accessible on the exterior; and uses capacitive/conductive technology to create a touch event on a mobile

electronic device when the button is in a second position. (See SleekPeeks Cardboard Viewer Video; ¶¶ 66-74, see also, ¶¶ 50-65, *supra*).

96. The definition of Structural Graphics Accused Products includes all products substantively similar to the SleekPeeks Cardboard Viewer (including other virtual reality viewers that comprise a conductive/capacitive touch "button" for use with a touchscreen of a mobile electronic device).

97. After adequate discovery, DDC may seek leave to amend this Complaint to include additional details of infringement, if any, and may identify other products hereafter discovered to infringe the Asserted Patents.

THE NON-CARDBOARD ACCUSED PRODUCTS

<u>Homido Accused Products</u>

98. Homido directly infringed, and continues to infringe, the Asserted Patents at least by making or having made, importing or having imported, using, offering to sell, and/or selling its Homido Viewers, which both include a "Capacitive action button to interact with VR Apps; Google Cardboard compatible," which uses capacitive/conductive touch technology to interact with the touchscreen of a smartphone:

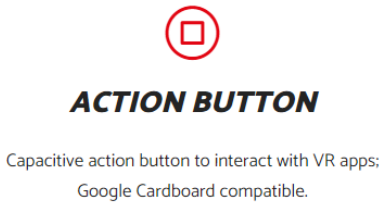

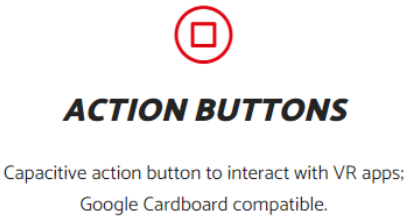

(See Exhibit Y: https://homido.com/en/homido-grab-2/; https://homido.com/en/homido-v2-2/).

Homido Grab

Homido V2

(See Exhibit Y: https://homido.com/en/eshop-2/).

99. Homido advertises the Homido Viewers as "Works With Google Cardboard:"

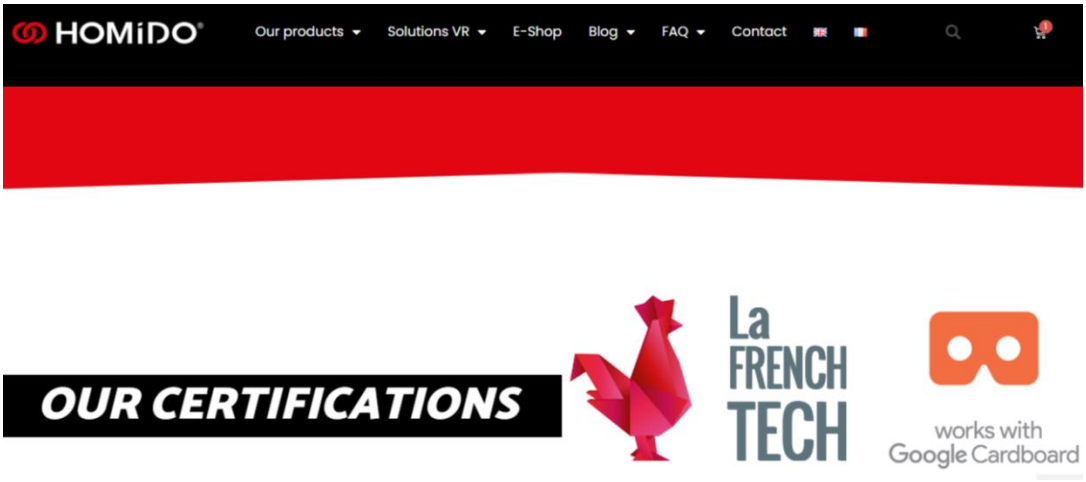

(See Exhibit Y: https://homido.com/en/home/).

100. Accordingly, as presently advised, the Homido Viewers are designed and manufactured in accordance with the pertinent features and design specifications set forth by Google in the WWGC Program documentation. (See ¶¶ 66-74, see also, ¶¶ 50-65, *supra*).

101. The Homido Viewers are virtual reality viewers designed to operate with a mobile electronic device having a touchscreen (*e.g.*, "smartphone"):

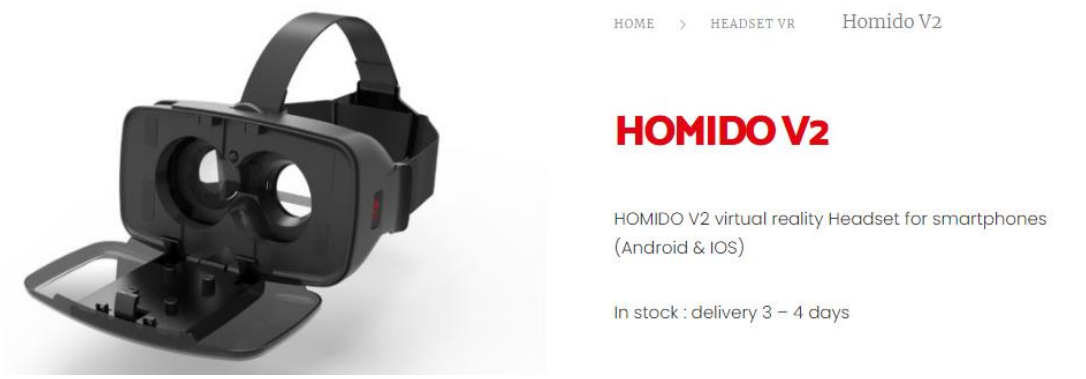

(See Exhibit Y: https://homido.com/en/product/homido-v2-2/).

HOMIDO GRAB

HOMIDO GRAB : Virtual reality headset for smartphone (compatible Android et IOS)

GRAB VR viewer, par homido. Style, Qualité, solidité.

Google carboard

Colors : Rouge, Noir, Bleu, Blanc, Rose et Jaune

- In stock
- Delivery: 3-4 days

(See Exhibit Y: https://homido.com/en/product/homido-grab-2/).

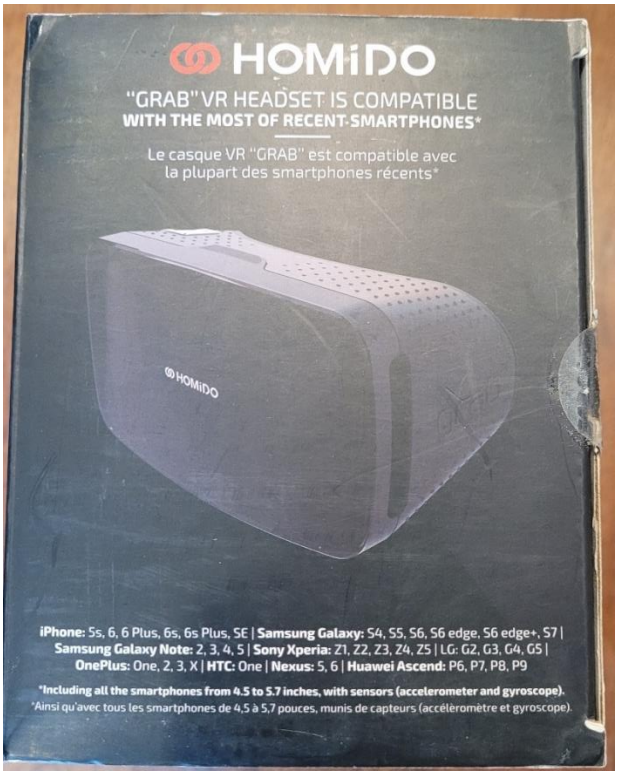

102. The Homido Viewers include two lenses for viewing the mobile electronic device:

(See Exhibit Y: https://homido.com/en/product/homido-v2-2/).

(See Exhibit Y: https://homido.com/en/product/homido-grab-2/).

103. The Homido Viewers comprise a housing configured to receive and hold the mobile electronic device such that the touchscreen is generally centered in a horizontal direction directly in a user's field of view:

(See Exhibit Y: https://homido.com/en/product/homido-v2-2/).

HOMIDO GRAB

HOMIDO GRAB : Virtual reality headset for smartphone (compatible Android et IOS)
GRAB VR viewer, par homido. Style, Qualité, solidité.
Google carboard

Colors : Rouge, Noir, Bleu, Blanc, Rose et Jaune
- In stock
- Delivery: 3-4 days

(See Exhibit Y: https://homido.com/en/product/homido-grab-2/).

104. The Homido Viewers include an input mechanism that is accessible on the exterior, which Homido describes as a "Capacitive action button to interact with VR Apps; Google Cardboard compatible":

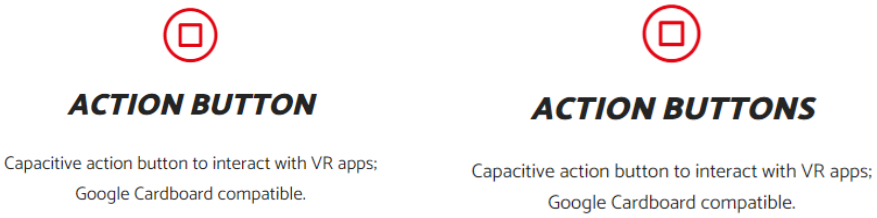

(See Exhibit Y: https://homido.com/en/homido-grab-2/; https://homido.com/en/homido-v2-2/).

105. The Homido Viewers use capacitive touch technology (to create a touch event on the touchscreen of a mobile electronic device), when the "capacitive action button" is in a second (or extended) position such that it is configured to contact (and, in fact, contacts) the touchscreen of the mobile electronic device within the virtual reality viewer housing:

106. The definition of Homido Accused Products includes all products substantively similar to the Homido Viewers (including other virtual reality viewers that comprise a "Capacitive action button" for use with a touchscreen of a mobile electronic device).

107. After adequate discovery, DDC may seek leave to amend this Complaint to include additional details of infringement, if any, and may identify other products hereafter discovered to infringe the Asserted Patents.

Emerge Accused Products

108. Emerge directly infringed, and continues to infringe, the Asserted Patents at least by making or having made, importing or having imported, using, offering to sell, and/or selling its Utopia Viewer, which includes a "BUILT-IN ACTION BUTTON" described on packaging as a "CAPACITIVE TOUCH TECHNOLOGY FOR MAXIMUM APP COMPATIBILITY":

109. While the Utopia Viewer does not include a representation that it "Works With Google Cardboard" (as is permitted pursuant to the WWGC Program documents), it does provide the claim that it is "FULLY COMPATIBLE WITH GOOGLE CARDBOARD." As presently

advised, the Utopia Viewer is designed and manufactured in accordance with the pertinent features and design specifications set forth by Google in the WWGC Program documentation. (See ¶¶ 66-74, see also, ¶¶ 50-65, *supra*).

110. The Utopia Viewer is a virtual reality viewer designed to operate with a mobile electronic device having a touchscreen (*e.g.*, "smartphone"). As shown above, Emerge's packaging states: "WORKS WITH YOUR SMARTPHONE" and "ULTRA-COMPATIBLE," "WORKS WITH VIRTUALLY ALL SMARTPHONES AND iPod TOUCH®":

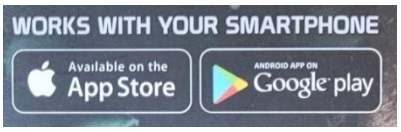

111. The Utopia Viewer includes two lenses for viewing the mobile electronic device:

112. The Utopia Viewer comprises a housing configured to receive and hold the mobile electronic device such that the touchscreen is generally centered in a horizontal direction directly in a user's field of view:

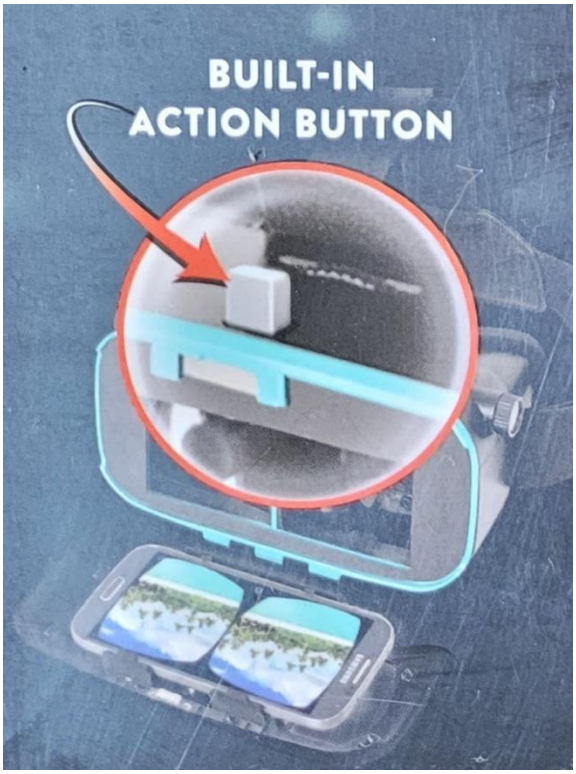

113. The Utopia Viewer includes an input mechanism that is accessible on the exterior, which Emerge describes as a "BUILT-IN ACTION BUTTON" and "CAPACITIVE TOUCH TECHNOLOGY FOR MAXIMUM APP COMPATIBILITY":

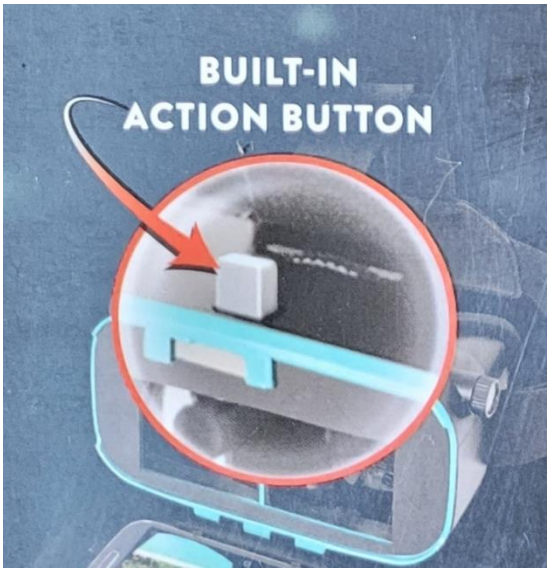

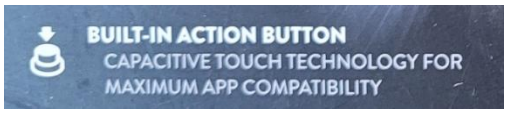

114. The Utopia Viewer uses "CAPACITIVE TOUCH TECHNOLOGY" (to create a touch event on the touchscreen of a mobile electronic device), when the "BUILT-IN ACTION BUTTON" is in a second (or extended) position such that it is configured to contact (and, in fact, contacts) the touchscreen of the mobile electronic device within the virtual reality viewer housing:

115. The definition of Emerge Accused Products includes all products substantively similar to the Utopia Viewer (including other virtual reality viewers that comprise a "BUILT-IN

ACTION BUTTON" or "CAPACITIVE TOUCH TECHNOLOGY" for use with a touchscreen of a mobile electronic device).

116. After adequate discovery, DDC may seek leave to amend this Complaint to include additional details of infringement, if any, and may identify other products hereafter discovered to infringe the Asserted Patents.

GOOGLE'S WILLFUL INDUCED INFRINGEMENT

117. As set forth above in ¶¶ 25-65, Google learned of the DODOcase inventions relating to capacitive/conductive touch for virtual reality viewers in 2014, proclaimed that such a button was "genius", but then proceeded to advertise to the world that the patented inventions were "open source" and provided Google-branded specifications and templates detailing how to use them.

118. Defendant Google willfully induced and continues to induce Defendants Emerge, Structural Graphics, Pyrite, Homido, and Landsberg to infringe claims of each of the Asserted Patents.

119. Google willfully induced and continues to induce other third parties to infringe the claims of each Asserted Patents, specifically (a) all members of the WWGC Program and (b) any entity with access to the Google documents published online that suggested that Google Cardboard Viewer specifications were "open source."

GOOGLE'S KNOWLEDGE AND WILLFULNESS

120. Upon information and belief, Google was aware of DODOcase's pending Application No. 14/801,606 (which later issued as the '075 Patent), its US Patent Publication No. 2016/0018853, and further filings with the Patent Office promptly after their filing, but in no event later than June of 2016.

121. On or around June 17, 2016, third-party MerchSource, LLC (owner of the "Sharper Image" brand) contacted DODOcase, unsolicited, to inquire about a license to the patent that would issue as the '075 Patent. Negotiations regarding that license proceeded for the next several months.

122. On or around August 5, 2016, a Google employee approached DODOcase at the VRLA conference, stated that someone had informed them that DODOcase was obtaining a patent on virtual reality technology, asked about DODOcase's intention for its pending patent rights, and stated that they would be bringing this information back to the Google legal team for review.

123. On or around October 4, 2016, DODOcase and MerchSource executed a license with respect to the newly-issued '075 Patent.

124. On or around October 19, 2016, DODOcase emailed Google to discuss Google's interest in the '075 Patent.

125. Between October of 2016 and March of 2017, Google and DODOcase had discussions regarding the '075 Patent. Resolution could not be reached based on Google's position that it expected to obtain a release and license to the '075 Patent for the cost of an *inter partes* review proceeding ("IPR") at the Patent Trial and Appeal Board ("PTAB"). Google identified alleged prior art in support of its suggested intention to seek resolution through an IPR proceeding. That alleged prior art was provided to the Patent Office for evaluation during all subsequent applications relating to the '075 Patent; the Patent Office issued each subsequent related patent despite that alleged prior art.

126. Notably, while negotiating with Google regarding a potential license to the '075 Patent, DODOcase remained a participant in the WWGC program. Accordingly, DODOcase was concerned that continued efforts to seek fair licensing terms could lead Google to harm

DODOcase's ongoing business. In fact, after negotiations commenced in the Fall of 2016, DODOcase experienced lost business due to apparent redirection of sales leads that had previously come through the WWGC Program.

127. Discussions with Google regarding licensing stalled thereafter.

128. In or around October of 2017, MerchSource informed DODOcase that it would no longer pay the royalties owed pursuant to its license. MerchSource contended that no royalties were owed because, *inter alia*, (a) Google was offering the Google Cardboard V2 Viewer to the public for free as "open source" and (b) it believed the patent claims to be invalid.

129. Upon information and belief, Google was aware of MerchSource's efforts to attempt to invalidate the patent claims and/or assisted in those efforts. In fact, on or around October 27, 2017, MerchSource's President stated on a call with DODOcase that MerchSource intended to invalidate DODOcase's patents and had been in contact with Google.

130. On December 13, 2017, DODOcase filed a lawsuit against MerchSource in the Northern District of California seeking to enjoin MerchSource from breach of the license agreement.

131. On January 15, 2018, MerchSource filed petitions requesting IPR of the '075 Patent and post grant review ("PGR") of the '184 Patent.

132. Therein, MerchSource contended that claims of the '075 and '184 Patents were invalid in view of three alleged prior art references: "Tech#" (a YouTube video titled "Use Google Cardboard without Magnetometer (enabling magnetic ring support to every device)," allegedly published on May 10, 2015); "Compton" (US Patent Publication No. 2013/0141360, titled "Head Mounted Display for Viewing Three Dimensional Images," allegedly published on June 6, 2013),

and "Gigaom" (a comment by "tobiasclaren" allegedly published on July 7, 2014 on a webpage titled "Why Google Cardboard is actually a huge boost for virtual reality").

133. None of the alleged prior art references negatively impact the Asserted Patents. Compton was of record before the US Patent Office during prosecution of all of the Asserted Patents. Gigaom does not constitute prior art because, *inter alia*, it does not qualify as a "printed publication" and Tech# does not constitute prior art because, *inter alia*, it does not qualify as a "printed publication" and, regardless, it falls within the 35 U.S.C. § 102(b)(1)(B) prior art exception.

134. Notwithstanding their status as non-prior art, Gigaom and Tech# were provided to the US Patent Office during patent prosecution proceedings that continued after institution of the IPR and PGR proceedings. That further patent prosecution resulted in the issuance of the '199, '000, and '001 Patents.

135. After extensive proceedings in the District Court, the Federal Circuit Court of Appeals, and the Patent Trial and Appeal Board, the IPR and PGR proceedings were terminated on August 16, 2019, per motion by MerchSource (such motion being compelled by the aforesaid Courts due to a forum selection clause governing such disputes between DODOcase and MerchSource).

COUNT I:
GOOGLE'S DIRECT INFRINGEMENT OF UNITED STATES PATENT NO. 9,420,075

136. DDC realleges and incorporates by reference paragraphs 1-135, inclusive, as though fully set forth herein.

137. Google's use, import, sale, offer for sale, and/or manufacture of the Google Accused Products directly infringed at least independent Claims 1, 18 and 20 of the '075 Patent.

Claim 1

138. Google's Accused Products were virtual reality viewers for use with a mobile electronic device having a touch-screen.

139. Google's Accused Products comprised a housing configured to receive the mobile electronic device.

140. Said housing was configured to hold the mobile electronic device such that the touch-screen was generally centered in a horizontal direction and directly in a user's field of view when looking into a generally hollow interior of the housing through a side opposite the touch-screen.

141. Google's Accused Products included an input mechanism that was accessible from an exterior of the housing and was moveable within the interior between at least a first position and an extended position.

142. Said input mechanism comprised an electrical shield having a surface, wherein only a portion of the surface of the electrical shield was configured to contact a central region of the touch-screen of the mobile electronic device when the input mechanism was in the extended position.

143. Google's Accused Products likely also infringed dependent Claims 2-15 of the '075 Patent.

Claim 18

144. Google's Accused Products were virtual reality viewers for use with a mobile electronic device having a capacitive touch-screen.

145. Google's Accused Products comprised a housing configured to receive the mobile electronic device and substantially enclose the touch-screen within a generally hollow interior of the housing, wherein the housing held the touch-screen in a position that was generally centered

in a horizontal direction and directly in a user's field of view when viewing the touch-screen through a back wall of the housing, wherein the back-wall was opposite the touch-screen and included a left and a right lens for viewing a left region and a right region of the interior and the touch-screen.

146. Google's Accused Products included an input device including, a first portion that was accessible from an exterior of the housing, and an elongate[d] second portion disposed within the interior of the housing between the left and right regions wherein the second portion was generally oriented in a vertical direction that was perpendicular to the horizontal direction.

147. Said input device comprised an electric shield, wherein a first surface of the electric shield was disposed on the first portion and was electrically coupled to a second surface of the electric shield, wherein the second surface was disposed on the second portion within the interior and was generally centered in the horizontal direction between the left and right regions, and wherein only the second surface of the electric shield was configured to contact a central portion of the touch-screen of the mobile electronic device and selectively transfer a capacitive touch input to the touch-screen in response to a user interaction with the first portion of the input mechanism.

148. Google's Accused Products likely also infringed dependent Claim 19 of the '075 Patent.

Claim 20

149. Google's Accused Products were virtual reality viewers for use with a mobile electronic device having a capacitive touch-screen.

150. Google's Accused Products comprised a housing configured to receive a mobile electronic device within an interior of the housing, wherein the housing was formed to define a cut-out through an exterior side of the housing.

151. Google's Accused Products included an input mechanism that was accessible from an exterior of the housing and was moveable within the interior between at least a first position and an extended position.

152. Said input mechanism comprised a lever that was accessible through the cut-out; an electrical shield, wherein only portion of a surface of the electrical shield was configured to contact the touchscreen of the mobile electronic device when in the extended position, a flexible linkage coupled to the lever and the housing, wherein the linkage was configured to deform in response to actuation of the lever and thereby guide the portion of the surface between the first position and the extended position, and wherein at least a portion of the input mechanism defined at least a portion of a view divider within the interior of the housing.

153. To the extent required by law, DDC has complied with, and requires each licensee to comply with, the provisions of 35 U.S.C. § 287.

154. Upon information and belief, Google had knowledge of the '075 Patent prior to its issuance and at least as early as June of 2016.

155. Google's direct infringement as described above has injured DDC and any future infringement would continue to injure DDC.

156. DDC is entitled to recover damages adequate to compensate it for such infringement but in no event less than a reasonable royalty for Google's infringement of the '075 Patent, together with interest and costs (including any damages that may be available for a presently undeterminable period prior to issuance of the '075 Patent).

157. DDC requests that Google be determined jointly and severally liable for any and all damages awarded against Landsberg for direct infringement of the '075 Patent as set forth in

Count II with respect to the Google Cardboard V2 Viewers manufactured for Google by Landsberg.

COUNT II:
LANDSBERG'S DIRECT INFRINGEMENT OF UNITED STATES PATENT NO. 9,420,075

158. DDC realleges and incorporates by reference paragraphs 1-135, inclusive, as though fully set forth herein.

159. Landsberg's use, import, sale, offers for sale, and manufacture of the Landsberg Accused Products directly infringed, and continues to infringe, at least independent Claims 1, 18, and 20 of the '075 Patent.

Claim 1

160. Landsberg's Accused Products are virtual reality viewers for use with a mobile electronic device having a touch-screen.

161. Landsberg's Accused Products comprise a housing configured to receive the mobile electronic device.

162. Said housing is configured to hold the mobile electronic device such that the touch-screen is generally centered in a horizontal direction and directly in a user's field of view when looking into a generally hollow interior of the housing through a side opposite the touch-screen.

163. Landsberg's Accused Products include an input mechanism that is accessible from an exterior of the housing and is moveable within the interior between at least a first position and an extended position.

164. Said input mechanism comprises an electrical shield having a surface, wherein only a portion of the surface of the electrical shield is configured to contact a central region of the touch-screen of the mobile electronic device when the input mechanism is in the extended position.

165. Landsberg's Accused Products likely also infringe dependent Claims 2-15 of the '075 Patent.

Claim 18

166. Landsberg's Accused Products are virtual reality viewers for use with a mobile electronic device having a capacitive touch-screen.

167. Landsberg's Accused Products comprise a housing configured to receive the mobile electronic device and substantially enclose the touch-screen within a generally hollow interior of the housing, wherein the housing holds the touch-screen in a position that is generally centered in a horizontal direction and directly in a user's field of view when viewing the touch-screen through a back wall of the housing, wherein the back-wall is opposite the touch-screen and includes a left and a right lens for viewing a left region and a right region of the interior and the touch-screen.

168. Landsberg's Accused Products include an input device including, a first portion that is accessible from an exterior of the housing, and an elongate[d] second portion disposed within the interior of the housing between the left and right regions wherein the second portion is generally oriented in a vertical direction that is perpendicular to the horizontal direction.

169. Said input device comprises an electric shield, wherein a first surface of the electric shield is disposed on the first portion and is electrically coupled to a second surface of the electric shield, wherein the second surface is disposed on the second portion within the interior and is generally centered in the horizontal direction between the left and right regions, and wherein only the second surface of the electric shield is configured to contact a central portion of the touch-screen of the mobile electronic device and selectively transfer a capacitive touch input to the touch-screen in response to a user interaction with the first portion of the input mechanism.

170. Landsberg's Accused Products likely also infringe dependent Claim 19 of the '075 Patent.

Claim 20

171. Landsberg's Accused Products are virtual reality viewers for use with a mobile electronic device having a capacitive touch-screen.

172. Landsberg's Accused Products comprise a housing configured to receive a mobile electronic device within an interior of the housing, wherein the housing is formed to define a cut-out through an exterior side of the housing.

173. Landsberg's Accused Products include an input mechanism that is accessible from an exterior of the housing and is moveable within the interior between at least a first position and an extended position.

174. Said input mechanism comprises a lever that is accessible through the cut-out; an electrical shield, wherein only portion of a surface of the electrical shield is configured to contact the touchscreen of the mobile electronic device when in the extended position, a flexible linkage coupled to the lever and the housing, wherein the linkage is configured to deform in response to actuation of the lever and thereby guide the portion of the surface between the first position and the extended position, and wherein at least a portion of the input mechanism defines at least a portion of a view divider within the interior of the housing.

175. To the extent required by law, DDC has complied with, and requires each licensee to comply with, the provisions of 35 U.S.C. § 287.

176. Landsberg's direct infringement as described above has injured and will continue to injure DDC as long as such infringement continues.

177. DDC is entitled to recover damages adequate to compensate it for such infringement but in no event less than a reasonable royalty for Landsberg's infringement of the

'075 Patent, together with interest and costs (including any damages that may be available for a presently undeterminable period prior to issuance of the '075 Patent).

178. DDC requests that Landsberg be determined jointly and severally liable for any and all damages awarded against Google for direct infringement of the '075 Patent as set forth in Count I with respect to the Google Cardboard V2 Viewers manufactured by Landsberg for Google.

COUNT III:
PYRITE'S DIRECT INFRINGEMENT OF UNITED STATES PATENT NO. 9,420,075

179. DDC realleges and incorporates by reference paragraphs 1-135, inclusive, as though fully set forth herein.

180. Pyrite's use, import, sale, offers for sale, and manufacture of the Pyrite Accused Products directly infringed, and continues to infringe, at least independent Claims 1, 18, and 20 of the '075 Patent.

Claim 1

181. Pyrite's Accused Products are virtual reality viewers for use with a mobile electronic device having a touch-screen.

182. Pyrite's Accused Products comprise a housing configured to receive the mobile electronic device.

183. Said housing is configured to hold the mobile electronic device such that the touch-screen is generally centered in a horizontal direction and directly in a user's field of view when looking into a generally hollow interior of the housing through a side opposite the touch-screen.

184. Pyrite's Accused Products include an input mechanism that is accessible from an exterior of the housing and is moveable within the interior between at least a first position and an extended position.

185. Said input mechanism comprises an electrical shield having a surface, wherein only a portion of the surface of the electrical shield is configured to contact a central region of the touch-screen of the mobile electronic device when the input mechanism is in the extended position.

186. Pyrite's Accused Products likely also infringe dependent Claims 2-15 of the '075 Patent.

Claim 18

187. Pyrite's Accused Products are virtual reality viewers for use with a mobile electronic device having a capacitive touch-screen.

188. Pyrite's Accused Products comprise a housing configured to receive the mobile electronic device and substantially enclose the touch-screen within a generally hollow interior of the housing, wherein the housing holds the touch-screen in a position that is generally centered in a horizontal direction and directly in a user's field of view when viewing the touch-screen through a back wall of the housing, wherein the back-wall is opposite the touch-screen and includes a left and a right lens for viewing a left region and a right region of the interior and the touch-screen.

189. Pyrite's Accused Products include an input device including, a first portion that is accessible from an exterior of the housing, and an elongate[d] second portion disposed within the interior of the housing between the left and right regions wherein the second portion is generally oriented in a vertical direction that is perpendicular to the horizontal direction.

190. Said input device comprises an electric shield, wherein a first surface of the electric shield is disposed on the first portion and is electrically coupled to a second surface of the electric shield, wherein the second surface is disposed on the second portion within the interior and is generally centered in the horizontal direction between the left and right regions, and wherein only the second surface of the electric shield is configured to contact a central portion of the touchscreen

of the mobile electronic device and selectively transfer a capacitive touch input to the touch-screen in response to a user interaction with the first portion of the input mechanism.

191. Pyrite's Accused Products likely also infringe dependent Claim 19 of the '075 Patent.

Claim 20

192. Pyrite's Accused Products are virtual reality viewers for use with a mobile electronic device having a capacitive touch-screen.

193. Pyrite's Accused Products comprise a housing configured to receive a mobile electronic device within an interior of the housing, wherein the housing is formed to define a cut-out through an exterior side of the housing.

194. Pyrite's Accused Products include an input mechanism that is accessible from an exterior of the housing and is moveable within the interior between at least a first position and an extended position.

195. Said input mechanism comprises a lever that is accessible through the cut-out; an electrical shield, wherein only portion of a surface of the electrical shield is configured to contact the touchscreen of the mobile electronic device when in the extended position, a flexible linkage coupled to the lever and the housing, wherein the linkage is configured to deform in response to actuation of the lever and thereby guide the portion of the surface between the first position and the extended position, and wherein at least a portion of the input mechanism defines at least a portion of a view divider within the interior of the housing.

196. To the extent required by law, DDC has complied with, and requires each licensee to comply with, the provisions of 35 U.S.C. § 287.

197. Pyrite's direct infringement as described above has injured and will continue to injure DDC as long as such infringement continues.

198. DDC is entitled to recover damages adequate to compensate it for such infringement but in no event less than a reasonable royalty for Pyrite's infringement of the '075 Patent, together with interest and costs (including any damages that may be available for a presently undeterminable period prior to issuance of the '075 Patent).

COUNT IV:
STRUCTURAL GRAPHIC'S DIRECT INFRINGEMENT OF UNITED STATES PATENT NO. 9,420,075

199. DDC realleges and incorporates by reference paragraphs 1-135, inclusive, as though fully set forth herein.

200. Structural Graphic's use, import, sale, offers for sale, and manufacture of the Structural Graphic Accused Products directly infringed, and continues to infringe, at least independent Claims 1, 18, and 20 of the '075 Patent.

Claim 1

201. Structural Graphic's Accused Products are virtual reality viewers for use with a mobile electronic device having a touch-screen.

202. Structural Graphic's Accused Products comprise a housing configured to receive the mobile electronic device.

203. Said housing is configured to hold the mobile electronic device such that the touch-screen is generally centered in a horizontal direction and directly in a user's field of view when looking into a generally hollow interior of the housing through a side opposite the touch-screen.

204. Structural Graphic's Accused Products include an input mechanism that is accessible from an exterior of the housing and is moveable within the interior between at least a first position and an extended position.

205. Said input mechanism comprises an electrical shield having a surface, wherein only a portion of the surface of the electrical shield is configured to contact a central region of the touch-screen of the mobile electronic device when the input mechanism is in the extended position.

206. Structural Graphic's Accused Products likely also infringe dependent Claims 2-15 of the '075 Patent.

Claim 18

207. Structural Graphic's Accused Products are virtual reality viewers for use with a mobile electronic device having a capacitive touch-screen.

208. Structural Graphic's Accused Products comprise a housing configured to receive the mobile electronic device and substantially enclose the touch-screen within a generally hollow interior of the housing, wherein the housing holds the touch-screen in a position that is generally centered in a horizontal direction and directly in a user's field of view when viewing the touch-screen through a back wall of the housing, wherein the back-wall is opposite the touch-screen and includes a left and a right lens for viewing a left region and a right region of the interior and the touch-screen.

209. Structural Graphic's Accused Products include an input device including, a first portion that is accessible from an exterior of the housing, and an elongate[d] second portion disposed within the interior of the housing between the left and right regions wherein the second portion is generally oriented in a vertical direction that is perpendicular to the horizontal direction.

210. Said input device comprises an electric shield, wherein a first surface of the electric shield is disposed on the first portion and is electrically coupled to a second surface of the electric shield, wherein the second surface is disposed on the second portion within the interior and is generally centered in the horizontal direction between the left and right regions, and wherein only the second surface of the electric shield is configured to contact a central portion of the touch-

screen of the mobile electronic device and selectively transfer a capacitive touch input to the touch-screen in response to a user interaction with the first portion of the input mechanism.

211. Structural Graphic's Accused Products likely also infringe dependent Claim 19 of the '075 Patent.

Claim 20

212. Structural Graphic's Accused Products are virtual reality viewers for use with a mobile electronic device having a capacitive touch-screen.

213. Structural Graphic's Accused Products comprise a housing configured to receive a mobile electronic device within an interior of the housing, wherein the housing is formed to define a cut-out through an exterior side of the housing.

214. Structural Graphic's Accused Products include an input mechanism that is accessible from an exterior of the housing and is moveable within the interior between at least a first position and an extended position.

215. Said input mechanism comprises a lever that is accessible through the cut-out; an electrical shield, wherein only portion of a surface of the electrical shield is configured to contact the touchscreen of the mobile electronic device when in the extended position, a flexible linkage coupled to the lever and the housing, wherein the linkage is configured to deform in response to actuation of the lever and thereby guide the portion of the surface between the first position and the extended position, and wherein at least a portion of the input mechanism defines at least a portion of a view divider within the interior of the housing.

216. To the extent required by law, DDC has complied with, and requires each licensee to comply with, the provisions of 35 U.S.C. § 287.

217. Structural Graphic's direct infringement as described above has injured and will continue to injure DDC as long as such infringement continues.

218. DDC is entitled to recover damages adequate to compensate it for such infringement but in no event less than a reasonable royalty for Structural Graphic's infringement of the '075 Patent, together with interest and costs (including any damages that may be available for a presently undeterminable period prior to issuance of the '075 Patent).

COUNT V:
HOMIDO'S DIRECT INFRINGEMENT OF UNITED STATES PATENT NO. 9,420,075

219. DDC realleges and incorporates by reference paragraphs 1-135, inclusive, as though fully set forth herein.

220. Homido's use, import, sale, offer for sale, importation and/or manufacture of the Homido Accused Products directly infringed, and continues to infringe, at least independent Claims 1 and 18 of the '075 Patent.

Claim 1

221. Homido's Accused Products are virtual reality viewers for use with a mobile electronic device having a touch-screen.

222. Homido's Accused Products comprise a housing configured to receive the mobile electronic device.

223. Said housing is configured to hold the mobile electronic device such that the touch-screen is generally centered in a horizontal direction and directly in a user's field of view when looking into a generally hollow interior of the housing through a side opposite the touch-screen.

224. Homido's Accused Products include an input mechanism that is accessible from an exterior of the housing and is moveable within the interior between at least a first position and an extended position.

225. Said input mechanism comprises an electrical shield having a surface, wherein only a portion of the surface of the electrical shield is configured to contact a central region of the touch-screen of the mobile electronic device when the input mechanism is in the extended position.

226. Homido's Accused Products likely also infringe dependent Claims 2-9 of the '075 Patent.

Claim 18

227. Homido's Accused Products are virtual reality viewers for use with a mobile electronic device having a capacitive touch-screen.

228. Homido's Accused Products comprise a housing configured to receive the mobile electronic device and substantially enclose the touch-screen within a generally hollow interior of the housing, wherein the housing holds the touch-screen in a position that is generally centered in a horizontal direction and directly in a user's field of view when viewing the touch-screen through a back wall of the housing, wherein the back-wall is opposite the touch-screen and includes a left and a right lens for viewing a left region and a right region of the interior and the touch-screen.

229. Homido's Accused Products include an input device including, a first portion that is accessible from an exterior of the housing, and an elongate[d] second portion disposed within the interior of the housing between the left and right regions wherein the second portion is generally oriented in a vertical direction that is perpendicular to the horizontal direction.

230. Said input device comprises an electric shield, wherein a first surface of the electric shield is disposed on the first portion and is electrically coupled to a second surface of the electric shield, wherein the second surface is disposed on the second portion within the interior and is generally centered in the horizontal direction between the left and right regions, and wherein only the second surface of the electric shield is configured to contact a central portion of the touch-

screen of the mobile electronic device and selectively transfer a capacitive touch input to the touch-screen in response to a user interaction with the first portion of the input mechanism.

231. To the extent required by law, DDC has complied with, and requires each licensee to comply with, the provisions of 35 U.S.C. § 287.

232. Homido's direct infringement as described above has injured and will continue to injure DDC as long as such infringement continues.

233. DDC is entitled to recover damages adequate to compensate it for such infringement but in no event less than a reasonable royalty for Homido's infringement of the '075 Patent, together with interest and costs (including any damages that may be available for a presently undeterminable period prior to issuance of the '075 Patent).

COUNT VI:
EMERGE'S DIRECT INFRINGEMENT OF UNITED STATES PATENT NO. 9,420,075

234. DDC realleges and incorporates by reference paragraphs 1-135, inclusive, as though fully set forth herein.

235. Emerge's use, import, sale, offer for sale, importation and/or manufacture of the Emerge Accused Products directly infringed, and continues to infringe, at least independent Claims 1 and 18 of the '075 Patent.

Claim 1

236. Emerge's Accused Products are virtual reality viewers for use with a mobile electronic device having a touch-screen.

237. Emerge's Accused Products comprise a housing configured to receive the mobile electronic device.

238. Said housing is configured to hold the mobile electronic device such that the touch-screen is generally centered in a horizontal direction and directly in a user's field of view when looking into a generally hollow interior of the housing through a side opposite the touch-screen.

239. Emerge's Accused Products include an input mechanism that is accessible from an exterior of the housing and is moveable within the interior between at least a first position and an extended position.

240. Said input mechanism comprises an electrical shield having a surface, wherein only a portion of the surface of the electrical shield is configured to contact a central region of the touch-screen of the mobile electronic device when the input mechanism is in the extended position.

241. Emerge's Accused Products likely also infringe dependent Claims 2-9 of the '075 Patent.

Claim 18

242. Emerge's Accused Products are virtual reality viewers for use with a mobile electronic device having a capacitive touch-screen.

243. Emerge's Accused Products comprise a housing configured to receive the mobile electronic device and substantially enclose the touch-screen within a generally hollow interior of the housing, wherein the housing holds the touch-screen in a position that is generally centered in a horizontal direction and directly in a user's field of view when viewing the touch-screen through a back wall of the housing, wherein the back-wall is opposite the touch-screen and includes a left and a right lens for viewing a left region and a right region of the interior and the touch-screen.

244. Emerge's Accused Products include an input device including, a first portion that is accessible from an exterior of the housing, and an elongate[d] second portion disposed within the interior of the housing between the left and right regions wherein the second portion is generally oriented in a vertical direction that is perpendicular to the horizontal direction.

245. Said input device comprises an electric shield, wherein a first surface of the electric shield is disposed on the first portion and is electrically coupled to a second surface of the electric shield, wherein the second surface is disposed on the second portion within the interior and is generally centered in the horizontal direction between the left and right regions, and wherein only the second surface of the electric shield is configured to contact a central portion of the touch-screen of the mobile electronic device and selectively transfer a capacitive touch input to the touch-screen in response to a user interaction with the first portion of the input mechanism.

246. To the extent required by law, DDC has complied with, and requires each licensee to comply with, the provisions of 35 U.S.C. § 287.

247. Emerge's direct infringement as described above has injured and will continue to injure DDC as long as such infringement continues.

248. DDC is entitled to recover damages adequate to compensate it for such infringement but in no event less than a reasonable royalty for Emerge's infringement of the '075 Patent, together with interest and costs (including any damages that may be available for a presently undeterminable period prior to issuance of the '075 Patent).

COUNT VII:
GOOGLE'S INDUCED INFRINGEMENT OF UNITED STATES PATENT NO. 9,420,075

249. DDC realleges and incorporates by reference paragraphs 1-135 and 158-248, inclusive, as though fully set forth herein.

250. Google induced, and continues to induce, Defendants (and other entities that make, sell, offer to sell, import, or use virtual reality viewers with the same or similar features) to directly infringe the '075 Patent.

251. Google actively encouraged, and continues to encourage, infringement of the '075 Patent through, *inter alia*, the dissemination of its Specifications and other WWGC Program

documents, wherein Google improperly identifies the Google Cardboard V2 Viewer as "open source" (in violation of the '075 Patent).

252. Google knew that its actions induced others – including Defendants, WWGC Program members, and any entity with access to its documents published online that suggested that Google Cardboard V2 Viewer specifications were "open source" – to directly infringe the '075 Patent.

253. Google's encouraging acts actually resulted in, and continue to result in, direct infringement of the '075 Patent (by Defendants and other third parties).

254. To the extent required by law, DDC has complied with, and requires each licensee to comply with, the provisions of 35 U.S.C. § 287.

255. Upon information and belief, Google had knowledge of the '075 Patent prior to its issuance and at least as early as June of 2016.

256. Google's induced infringement as described above has injured and will continue to injure DDC as long as such infringement continues.

257. DDC is entitled to recover damages adequate to compensate it for such infringement but in no event less than a reasonable royalty for Google's infringement of the '075 Patent, together with interest and costs (including any damages that may be available for a presently undeterminable period prior to issuance of the '075 Patent).

258. DDC requests that Google be determined jointly and severally liable for any and all damages awarded against any other Defendant for direct infringement of the '075 Patent as set forth in Counts II-VI.

COUNT VIII:
GOOGLE'S DIRECT INFRINGEMENT OF UNITED STATES PATENT NO. 9,811,184

259. DDC realleges and incorporates by reference paragraphs 1-135, inclusive, as though fully set forth herein.

260. Google's use, import, sale, offers for sale, and manufacture of the Google Accused Products directly infringed at least independent Claim 12 of the '184 Patent.

Claim 12

261. Google's Accused Products were virtual reality viewers for use with a mobile electronic device having a touchscreen.

262. Google's Accused Products comprised a first lens and a second lens, wherein the first lens is facing the same direction as the second lens and wherein the first lens and the second lens are spaced apart in a horizontal direction.

263. Google's Accused Products comprised an enclosure having a first side and a second side opposite the first side, the first side configured to hold the first lens and the second lens, the second side configured to receive the mobile electronic device.

264. Google's Accused Products included a user input that was accessible from an exterior of the enclosure and has a first position and a second position.

265. Google's Accused Products included a touchscreen input conductively coupled to the user input and generally centered between the first lens and the second lens in the horizontal direction, wherein, upon receipt of the mobile electronic device, the touchscreen input was in physical contact with the touchscreen when the user input was in the second position.

266. Google's Accused Products likely also infringed dependent Claims 15-18 and 20 of the '184 Patent.

267. To the extent required by law, DDC has complied with, and requires each licensee to comply with, the provisions of 35 U.S.C. § 287.

268. Upon information and belief, Google had knowledge of the '184 Patent prior to its issuance and as early as its publication on June 22, 2017.

269. Google's direct infringement as described above has injured DDC and any future infringement will continue to injure DDC.

270. DDC is entitled to recover damages adequate to compensate it for such infringement but in no event less than a reasonable royalty for Google's infringement of the '184 Patent, together with interest and costs (including any damages that may be available for a presently undeterminable period prior to issuance of the '184 Patent).

271. DDC requests that Google be determined jointly and severally liable for any and all damages awarded against Landsberg for direct infringement of the '184 Patent as set forth in Count IX with respect to the Google Cardboard V2 Viewers manufactured for Google by Landsberg.

COUNT IX:
LANDSBERG'S DIRECT INFRINGEMENT OF UNITED STATES PATENT NO. 9,811,184

272. DDC realleges and incorporates by reference paragraphs 1-135, inclusive, as though fully set forth herein.

273. Landsberg's use, import, sale, offers for sale, and manufacture of the Landsberg Accused Products directly infringed, and continue to infringe, at least independent Claim 12 of the '184 Patent.

Claim 12

274. Landsberg's Accused Products are virtual reality viewers for use with a mobile electronic device having a touchscreen.

275. Landsberg's Accused Products comprise a first lens and a second lens, wherein the first lens is facing the same direction as the second lens and wherein the first lens and the second lens are spaced apart in a horizontal direction.

276. Landsberg's Accused Products comprise an enclosure having a first side and a second side opposite the first side, the first side configured to hold the first lens and the second lens, the second side configured to receive the mobile electronic device.

277. Landsberg's Accused Products include a user input that is accessible from an exterior of the enclosure and has a first position and a second position.

278. Landsberg's Accused Products include a touchscreen input conductively coupled to the user input and generally centered between the first lens and the second lens in the horizontal direction, wherein, upon receipt of the mobile electronic device, the touchscreen input is in physical contact with the touchscreen when the user input is in the second position.

279. Landsberg's Accused Products likely also infringe dependent Claims 15-18 and 20 of the '184 Patent.

280. To the extent required by law, DDC has complied with, and requires each licensee to comply with, the provisions of 35 U.S.C. § 287.

281. Landsberg's direct infringement as described above has injured and will continue to injure DDC as long as such infringement continues.

282. DDC is entitled to recover damages adequate to compensate it for such infringement but in no event less than a reasonable royalty for Landsberg's infringement of the '184 Patent, together with interest and costs (including any damages that may be available for a presently undeterminable period prior to issuance of the '184 Patent).

283. DDC requests that Landsberg be determined jointly and severally liable for any and all damages awarded against Google for direct infringement of the '184 Patent as set forth in Count VIII with respect to the Google Cardboard V2 Viewers manufactured by Landsberg for Google.

COUNT X:
PYRITE'S DIRECT INFRINGEMENT OF UNITED STATES PATENT NO. 9,811,184

284. DDC realleges and incorporates by reference paragraphs 1-135, inclusive, as though fully set forth herein.

285. Pyrite's use, import, sale, offers for sale, and manufacture of the Pyrite Accused Products directly infringed, and continue to infringe, at least independent Claim 12 of the '184 Patent.

Claim 12

286. Pyrite's Accused Products are virtual reality viewers for use with a mobile electronic device having a touchscreen.

287. Pyrite's Accused Products comprise a first lens and a second lens, wherein the first lens is facing the same direction as the second lens and wherein the first lens and the second lens are spaced apart in a horizontal direction.

288. Pyrite's Accused Products comprise an enclosure having a first side and a second side opposite the first side, the first side configured to hold the first lens and the second lens, the second side configured to receive the mobile electronic device.

289. Pyrite's Accused Products include a user input that is accessible from an exterior of the enclosure and has a first position and a second position.

290. Pyrite's Accused Products include a touchscreen input conductively coupled to the user input and generally centered between the first lens and the second lens in the horizontal

direction, wherein, upon receipt of the mobile electronic device, the touchscreen input is in physical contact with the touchscreen when the user input is in the second position.

291. Pyrite's Accused Products likely also infringe dependent Claims 15-18 and 20 of the '184 Patent.

292. To the extent required by law, DDC has complied with, and requires each licensee to comply with, the provisions of 35 U.S.C. § 287.

293. Pyrite's direct infringement as described above has injured and will continue to injure DDC as long as such infringement continues.

294. DDC is entitled to recover damages adequate to compensate it for such infringement but in no event less than a reasonable royalty for Pyrite's infringement of the '184 Patent, together with interest and costs (including any damages that may be available for a presently undeterminable period prior to issuance of the '184 Patent).

COUNT XI:
STRUCTURAL GRAPHIC'S DIRECT INFRINGEMENT OF UNITED STATES PATENT NO. 9,811,184

295. DDC realleges and incorporates by reference paragraphs 1-135, inclusive, as though fully set forth herein.

296. Structural Graphic's use, import, sale, offers for sale, and manufacture of the Structural Graphic Accused Products directly infringed, and continue to infringe, at least independent Claim 12 of the '184 Patent.

Claim 12

297. Structural Graphic's Accused Products are virtual reality viewers for use with a mobile electronic device having a touchscreen.

298. Structural Graphic's Accused Products comprise a first lens and a second lens, wherein the first lens is facing the same direction as the second lens and wherein the first lens and the second lens are spaced apart in a horizontal direction.

299. Structural Graphic's Accused Products comprise an enclosure having a first side and a second side opposite the first side, the first side configured to hold the first lens and the second lens, the second side configured to receive the mobile electronic device.

300. Structural Graphic's Accused Products include a user input that is accessible from an exterior of the enclosure and has a first position and a second position.

301. Structural Graphic's Accused Products include a touchscreen input conductively coupled to the user input and generally centered between the first lens and the second lens in the horizontal direction, wherein, upon receipt of the mobile electronic device, the touchscreen input is in physical contact with the touchscreen when the user input is in the second position.

302. Structural Graphic's Accused Products likely also infringe dependent Claims 15-18 and 20 of the '184 Patent.

303. To the extent required by law, DDC has complied with, and requires each licensee to comply with, the provisions of 35 U.S.C. § 287.

304. Structural Graphic's direct infringement as described above has injured and will continue to injure DDC as long as such infringement continues.

305. DDC is entitled to recover damages adequate to compensate it for such infringement but in no event less than a reasonable royalty for Structural Graphic's infringement of the '184 Patent, together with interest and costs (including any damages that may be available for a presently undeterminable period prior to issuance of the '184 Patent).

COUNT XII:
HOMIDO'S DIRECT INFRINGEMENT OF UNITED STATES PATENT NO. 9,811,184

306. DDC realleges and incorporates by reference paragraphs 1-135, inclusive, as though fully set forth herein.

307. Homido's use, import, sale, offer for sale, importation and/or manufacture of the Homido Accused Products directly infringed, and continues to infringe, at least independent Claim 12 of the '184 Patent.

Claim 12

308. Homido's Accused Products are virtual reality viewers for use with a mobile electronic device having a touchscreen.

309. Homido's Accused Products comprise a first lens and a second lens, wherein the first lens is facing the same direction as the second lens and wherein the first lens and the second lens are spaced apart in a horizontal direction.

310. Homido's Accused Products comprise an enclosure having a first side and a second side opposite the first side, the first side configured to hold the first lens and the second lens, the second side configured to receive the mobile electronic device.

311. Homido's Accused Products include a user input that is accessible from an exterior of the enclosure and has a first position and a second position.

312. Homido's Accused Products include a touchscreen input conductively coupled to the user input and generally centered between the first lens and the second lens in the horizontal direction, wherein, upon receipt of the mobile electronic device, the touchscreen input is in physical contact with the touchscreen when the user input is in the second position.

313. Homido's Accused Products likely also infringe dependent Claims 15-18 and 20 of the '184 Patent.

314. To the extent required by law, DDC has complied with, and requires each licensee to comply with, the provisions of 35 U.S.C. § 287.

315. Homido's direct infringement as described above has injured and will continue to injure DDC as long as such infringement continues.

316. DDC is entitled to recover damages adequate to compensate it for such infringement but in no event less than a reasonable royalty for Homido's infringement of the '184 Patent, together with interest and costs (including any damages that may be available for a presently undeterminable period prior to issuance of the '184 Patent).

COUNT XIII:
EMERGE'S DIRECT INFRINGEMENT OF UNITED STATES PATENT NO. 9,811,184

317. DDC realleges and incorporates by reference paragraphs 1-135, inclusive, as though fully set forth herein.

318. Emerge's use, import, sale, offer for sale, importation and/or manufacture of the Emerge Accused Products directly infringed, and continues to infringe, at least independent Claim 12 of the '184 Patent.

Claim 12

319. Emerge's Accused Products are virtual reality viewers for use with a mobile electronic device having a touchscreen.

320. Emerge's Accused Products comprise a first lens and a second lens, wherein the first lens is facing the same direction as the second lens and wherein the first lens and the second lens are spaced apart in a horizontal direction.

321. Emerge's Accused Products comprise an enclosure having a first side and a second side opposite the first side, the first side configured to hold the first lens and the second lens, the second side configured to receive the mobile electronic device.

322. Emerge's Accused Products include a user input that is accessible from an exterior of the enclosure and has a first position and a second position.

323. Emerge's Accused Products include a touchscreen input conductively coupled to the user input and generally centered between the first lens and the second lens in the horizontal direction, wherein, upon receipt of the mobile electronic device, the touchscreen input is in physical contact with the touchscreen when the user input is in the second position.

324. Emerge's Accused Products likely also infringe dependent Claims 15-18 and 20 of the '184 Patent.

325. To the extent required by law, DDC has complied with, and requires each licensee to comply with, the provisions of 35 U.S.C. § 287.

326. Emerge's direct infringement as described above has injured and will continue to injure DDC as long as such infringement continues.

327. DDC is entitled to recover damages adequate to compensate it for such infringement but in no event less than a reasonable royalty for Emerge's infringement of the '184 Patent, together with interest and costs (including any damages that may be available for a presently undeterminable period prior to issuance of the '184 Patent).

COUNT XIV:
GOOGLE'S INDUCED INFRINGEMENT OF UNITED STATES PATENT NO. 9,811,184

328. DDC realleges and incorporates by reference paragraphs 1-135 and 272-327, inclusive, as though fully set forth herein.

329. Google induced, and continues to induce, Defendants (and other entities that make, sell, offer to sell, import, or use virtual reality viewers with the same or similar features) to directly infringe the '184 Patent.

330. Google actively encouraged, and continues to encourage, infringement of the '184 Patent through, *inter alia*, the dissemination of its Specifications and other WWGC Program documents, wherein Google improperly identifies the Google Cardboard V2 Viewer "open source" (in violation of the '184 Patent).

331. Google knew that its actions induced others – including Defendants, WWGC Program members, and any entity with access to its documents published online that suggested that Google Cardboard V2 Viewer specifications were "open source" – to directly infringe the '184 Patent.

332. Google's encouraging acts actually resulted in, and continue to result in, direct infringement of the '184 Patent (by Defendants and other third parties).

333. To the extent required by law, DDC has complied with, and requires each licensee to comply with, the provisions of 35 U.S.C. § 287.

334. Upon information and belief, Google had knowledge of the '184 Patent prior to its issuance and as early as its publication on June 22, 2017.

335. Google's induced infringement as described above has injured and will continue to injure DDC as long as such infringement continues.

336. DDC is entitled to recover damages adequate to compensate it for such infringement but in no event less than a reasonable royalty for Google's infringement of the '184 Patent, together with interest and costs (including any damages that may be available for a presently undeterminable period prior to issuance of the '184 Patent).

337. DDC requests that Google be determined jointly and severally liable for any and all damages awarded against any other Defendant for direct infringement of the '184 Patent as set forth in Counts IX-XIII.

COUNT XV:
GOOGLE'S DIRECT INFRINGEMENT OF UNITED STATES PATENT NO. 10,528,199

338. DDC realleges and incorporates by reference paragraphs 1-135, inclusive, as though fully set forth herein.

339. Google's use, import, sale, offers for sale, and manufacture of the Google Accused Products directly infringed at least independent Claims 1 and 30 of the '199 Patent.

Claim 1

340. Google's Accused Products were virtual reality viewers for use with a mobile electronic device having a touchscreen.

341. Google's Accused Products comprised a first lens and a second lens, wherein the first lens was facing the same direction as the second lens, and wherein the first lens and the second lens were spaced apart in a horizontal direction.

342. Google's Accused Products comprised a frame having a first side and a second side opposite the first side, the first side configured to hold the first lens and the second lens, the second side configured to receive the mobile electronic device, wherein the frame was configured to hold the mobile electronic device such that the mobile electronic device was generally centered in a horizontal direction and directly in a user's field of view when looking through the first side of the frame.

343. Google's Accused Products included a touchscreen input constructed of material and having a surface such that only a portion of the surface of the touchscreen input was configured to contact a central region of the touchscreen of the mobile electronic device when the touchscreen input was activated.

344. Google's Accused Products likely also infringed dependent Claims 2, 4-6, and 16-27 of the '199 Patent.

Claim 30

345. Google's Accused Products were virtual reality viewers for use with a mobile electronic device having a touchscreen.

346. Google's Accused Products comprised a first lens and a second lens, wherein the first lens was facing the same direction as the second lens, and wherein the first lens and the second lens were spaced apart in a horizontal direction.

347. Google's Accused Products comprised a frame having a first side and a second side opposite the first side, the first side configured to hold the first lens and the second lens, the second side configured to receive the mobile electronic device, wherein the frame was configured to hold the mobile electronic device such that the mobile electronic device was generally centered in a horizontal direction and directly in a user's field of view when looking through the first side of the frame.

348. Google's Accused Products included a user input that was accessible from an exterior of the enclosure and had a first position and a second position.

349. Google's Accused Products included a touchscreen input that was coupled to the user input and generally centered between the first lens and the second lens in the horizontal direction, wherein the touchscreen had a surface such that only a portion of the surface of the touchscreen input was configured to contact a central region of the touchscreen when the user input was in the second position.

350. Google's Accused Products likely also infringed dependent Claims 33-35 and 37-40 of the '199 Patent.

351. To the extent required by law, DDC has complied with, and requires each licensee to comply with, the provisions of 35 U.S.C. § 287.

352. Upon information and belief, Google had knowledge of the '199 Patent prior to its issuance and as early as its publication on May 10, 2018.

353. Google's direct infringement as described above has injured DDC and any future infringement will continue to injure DDC.

354. DDC is entitled to recover damages adequate to compensate it for such infringement but in no event less than a reasonable royalty for Google's infringement of the '199 Patent, together with interest and costs (including any damages that may be available for a presently undeterminable period prior to issuance of the '199 Patent).

355. DDC requests that Google be determined jointly and severally liable for any and all damages awarded against Landsberg for direct infringement of the '199 Patent as set forth in Count XVI with respect to the Google Cardboard V2 Viewers manufactured for Google by Landsberg.

COUNT XVI:
LANDSBERG'S DIRECT INFRINGEMENT OF UNITED STATES PATENT NO. 10,528,199

356. DDC realleges and incorporates by reference paragraphs 1-135, inclusive, as though fully set forth herein.

357. Landsberg's use, import, sale, offers for sale, and manufacture of the Landsberg Accused Products directly infringed, and continue to infringe, at least independent Claims 1 and 30 of the '199 Patent.

Claim 1

358. Landsberg's Accused Products are virtual reality viewers for use with a mobile electronic device having a touchscreen.

359. Landsberg's Accused Products comprise a first lens and a second lens, wherein the first lens is facing the same direction as the second lens, and wherein the first lens and the second lens are spaced apart in a horizontal direction.

360. Landsberg's Accused Products comprise a frame having a first side and a second side opposite the first side, the first side configured to hold the first lens and the second lens, the second side configured to receive the mobile electronic device, wherein the frame is configured to hold the mobile electronic device such that the mobile electronic device is generally centered in a horizontal direction and directly in a user's field of view when looking through the first side of the frame.

361. Landsberg's Accused Products include a touchscreen input constructed of material and having a surface such that only a portion of the surface of the touchscreen input is configured to contact a central region of the touchscreen of the mobile electronic device when the touchscreen input is activated.

362. Landsberg's Accused Products likely also infringe dependent Claims 2, 4-6, and 16-27 of the '199 Patent.

Claim 30

363. Landsberg's Accused Products are virtual reality viewers for use with a mobile electronic device having a touchscreen.

364. Landsberg's Accused Products comprise a first lens and a second lens, wherein the first lens is facing the same direction as the second lens, and wherein the first lens and the second lens are spaced apart in a horizontal direction.

365. Landsberg's Accused Products comprise a frame having a first side and a second side opposite the first side, the first side configured to hold the first lens and the second lens, the second side configured to receive the mobile electronic device, wherein the frame is configured to

hold the mobile electronic device such that the mobile electronic device is generally centered in a horizontal direction and directly in a user's field of view when looking through the first side of the frame.

366. Landsberg's Accused Products include a user input that is accessible from an exterior of the enclosure and has a first position and a second position.

367. Landsberg's Accused Products include a touchscreen input that is coupled to the user input and generally centered between the first lens and the second lens in the horizontal direction, wherein the touchscreen has a surface such that only a portion of the surface of the touchscreen input is configured to contact a central region of the touchscreen when the user input is in the second position.

368. Landsberg's Accused Products likely also infringe dependent Claims 33-35 and 37-40 of the '199 Patent.

369. To the extent required by law, DDC has complied with, and requires each licensee to comply with, the provisions of 35 U.S.C. § 287.

370. Landsberg's direct infringement as described above has injured and will continue to injure DDC as long as such infringement continues.

371. DDC is entitled to recover damages adequate to compensate it for such infringement but in no event less than a reasonable royalty for Landsberg's infringement of the '199 Patent, together with interest and costs (including any damages that may be available for a presently undeterminable period prior to issuance of the '199 Patent).

372. DDC requests that Landsberg be determined jointly and severally liable for any and all damages awarded against Google for direct infringement of the '199 Patent as set forth in Count XV with respect to the Google Cardboard V2 Viewers manufactured by Landsberg for Google.

COUNT XVII:
PYRITE'S DIRECT INFRINGEMENT OF UNITED STATES PATENT NO. 10,528,199

373. DDC realleges and incorporates by reference paragraphs 1-135, inclusive, as though fully set forth herein.

374. Pyrite's use, import, sale, offers for sale, and manufacture of the Pyrite Accused Products directly infringed, and continue to infringe, at least independent Claims 1 and 30 of the '199 Patent.

Claim 1

375. Pyrite's Accused Products are virtual reality viewers for use with a mobile electronic device having a touchscreen.

376. Pyrite's Accused Products comprise a first lens and a second lens, wherein the first lens is facing the same direction as the second lens, and wherein the first lens and the second lens are spaced apart in a horizontal direction.

377. Pyrite's Accused Products comprise a frame having a first side and a second side opposite the first side, the first side configured to hold the first lens and the second lens, the second side configured to receive the mobile electronic device, wherein the frame is configured to hold the mobile electronic device such that the mobile electronic device is generally centered in a horizontal direction and directly in a user's field of view when looking through the first side of the frame.

378. Pyrite's Accused Products include a touchscreen input constructed of material and having a surface such that only a portion of the surface of the touchscreen input is configured to contact a central region of the touchscreen of the mobile electronic device when the touchscreen input is activated.

379. Pyrite's Accused Products likely also infringe dependent Claims 2, 4-6, and 16-27 of the '199 Patent.

Claim 30

380. Pyrite's Accused Products are virtual reality viewers for use with a mobile electronic device having a touchscreen.

381. Pyrite's Accused Products comprise a first lens and a second lens, wherein the first lens is facing the same direction as the second lens, and wherein the first lens and the second lens are spaced apart in a horizontal direction.

382. Pyrite's Accused Products comprise a frame having a first side and a second side opposite the first side, the first side configured to hold the first lens and the second lens, the second side configured to receive the mobile electronic device, wherein the frame is configured to hold the mobile electronic device such that the mobile electronic device is generally centered in a horizontal direction and directly in a user's field of view when looking through the first side of the frame.

383. Pyrite's Accused Products include a user input that is accessible from an exterior of the enclosure and has a first position and a second position.

384. Pyrite's Accused Products include a touchscreen input that is coupled to the user input and generally centered between the first lens and the second lens in the horizontal direction, wherein the touchscreen has a surface such that only a portion of the surface of the touchscreen input is configured to contact a central region of the touchscreen when the user input is in the second position.

385. Pyrite's Accused Products likely also infringe dependent Claims 33-35 and 37-40 of the '199 Patent.

386. To the extent required by law, DDC has complied with, and requires each licensee to comply with, the provisions of 35 U.S.C. § 287.

387. Pyrite's direct infringement as described above has injured and will continue to injure DDC as long as such infringement continues.

388. DDC is entitled to recover damages adequate to compensate it for such infringement but in no event less than a reasonable royalty for Pyrite's infringement of the '199 Patent, together with interest and costs (including any damages that may be available for a presently undeterminable period prior to issuance of the '199 Patent).

COUNT XVIII:
STRUCTURAL GRAPHIC'S DIRECT INFRINGEMENT OF UNITED STATES PATENT NO. 10,528,199

389. DDC realleges and incorporates by reference paragraphs 1-135, inclusive, as though fully set forth herein.

390. Structural Graphic's use, import, sale, offers for sale, and manufacture of the Structural Graphic Accused Products directly infringed, and continue to infringe, at least independent Claims 1 and 30 of the '199 Patent.

Claim 1

391. Structural Graphic's Accused Products are virtual reality viewers for use with a mobile electronic device having a touchscreen.

392. Structural Graphic's Accused Products comprise a first lens and a second lens, wherein the first lens is facing the same direction as the second lens, and wherein the first lens and the second lens are spaced apart in a horizontal direction.

393. Structural Graphic's Accused Products comprise a frame having a first side and a second side opposite the first side, the first side configured to hold the first lens and the second lens, the second side configured to receive the mobile electronic device, wherein the frame is

configured to hold the mobile electronic device such that the mobile electronic device is generally centered in a horizontal direction and directly in a user's field of view when looking through the first side of the frame.

394. Structural Graphic's Accused Products include a touchscreen input constructed of material and having a surface such that only a portion of the surface of the touchscreen input is configured to contact a central region of the touchscreen of the mobile electronic device when the touchscreen input is activated.

395. Structural Graphic's Accused Products likely also infringe dependent Claims 2, 4-6, and 16-27 of the '199 Patent.

Claim 30

396. Structural Graphic's Accused Products are virtual reality viewers for use with a mobile electronic device having a touchscreen.

397. Structural Graphic's Accused Products comprise a first lens and a second lens, wherein the first lens is facing the same direction as the second lens, and wherein the first lens and the second lens are spaced apart in a horizontal direction.

398. Structural Graphic's Accused Products comprise a frame having a first side and a second side opposite the first side, the first side configured to hold the first lens and the second lens, the second side configured to receive the mobile electronic device, wherein the frame is configured to hold the mobile electronic device such that the mobile electronic device is generally centered in a horizontal direction and directly in a user's field of view when looking through the first side of the frame.

399. Structural Graphic's Accused Products include a user input that is accessible from an exterior of the enclosure and has a first position and a second position.

400. Structural Graphic's Accused Products include a touchscreen input that is coupled to the user input and generally centered between the first lens and the second lens in the horizontal direction, wherein the touchscreen has a surface such that only a portion of the surface of the touchscreen input is configured to contact a central region of the touchscreen when the user input is in the second position.

401. Structural Graphic's Accused Products likely also infringe dependent Claims 33-35 and 37-40 of the '199 Patent.

402. To the extent required by law, DDC has complied with, and requires each licensee to comply with, the provisions of 35 U.S.C. § 287.

403. Structural Graphic's direct infringement as described above has injured and will continue to injure DDC as long as such infringement continues.

404. DDC is entitled to recover damages adequate to compensate it for such infringement but in no event less than a reasonable royalty for Structural Graphic's infringement of the '199 Patent, together with interest and costs (including any damages that may be available for a presently undeterminable period prior to issuance of the '199 Patent).

COUNT XIX:
HOMIDO'S DIRECT INFRINGEMENT OF UNITED STATES PATENT NO. 10,528,199

405. DDC realleges and incorporates by reference paragraphs 1-135, inclusive, as though fully set forth herein.

406. Homido's use, import, sale, offer for sale, importation and/or manufacture of the Accused Products directly infringed, and continues to infringe, at least independent Claims 1 and 30 of the '199 Patent.

Claim 1

407. Homido's Accused Products are virtual reality viewers for use with a mobile electronic device having a touchscreen.

408. Homido's Accused Products comprise a first lens and a second lens, wherein the first lens is facing the same direction as the second lens, and wherein the first lens and the second lens are spaced apart in a horizontal direction.

409. Homido's Accused Products comprise a frame having a first side and a second side opposite the first side, the first side configured to hold the first lens and the second lens, the second side configured to receive the mobile electronic device, wherein the frame is configured to hold the mobile electronic device such that the mobile electronic device is generally centered in a horizontal direction and directly in a user's field of view when looking through the first side of the frame.

410. Homido's Accused Products include a touchscreen input constructed of material and having a surface such that only a portion of the surface of the touchscreen input is configured to contact a central region of the touchscreen of the mobile electronic device when the touchscreen input is activated.

411. Homido's Accused Products likely also infringe dependent Claims 2, 4-6, and 16-27 of the '199 Patent.

Claim 30

412. Homido's Accused Products are virtual reality viewers for use with a mobile electronic device having a touchscreen.

413. Homido's Accused Products comprise a first lens and a second lens, wherein the first lens is facing the same direction as the second lens, and wherein the first lens and the second lens are spaced apart in a horizontal direction.

414. Homido's Accused Products comprise a frame having a first side and a second side opposite the first side, the first side configured to hold the first lens and the second lens, the second side configured to receive the mobile electronic device, wherein the frame is configured to hold the mobile electronic device such that the mobile electronic device is generally centered in a horizontal direction and directly in a user's field of view when looking through the first side of the frame.

415. Homido's Accused Products include a user input that is accessible from an exterior of the enclosure and has a first position and a second position.

416. Homido's Accused Products include a touchscreen input that is coupled to the user input and generally centered between the first lens and the second lens in the horizontal direction, wherein the touchscreen has a surface such that only a portion of the surface of the touchscreen input is configured to contact a central region of the touchscreen when the user input is in the second position.

417. Homido's Accused Products likely also infringe dependent Claims 33-35 and 37-40 of the '199 Patent.

418. To the extent required by law, DDC has complied with, and requires each licensee to comply with, the provisions of 35 U.S.C. § 287.

419. Homido's direct infringement as described above has injured and will continue to injure DDC as long as such infringement continues.

420. DDC is entitled to recover damages adequate to compensate it for such infringement but in no event less than a reasonable royalty for Homido's infringement of the '199 Patent, together with interest and costs (including any damages that may be available for a presently undeterminable period prior to issuance of the '199 Patent).

COUNT XX:
EMERGE'S DIRECT INFRINGEMENT OF UNITED STATES PATENT NO. 10,528,199

421. DDC realleges and incorporates by reference paragraphs 1-135, inclusive, as though fully set forth herein.

422. Emerge's use, import, sale, offer for sale, importation and/or manufacture of the Emerge Accused Products directly infringed, and continues to infringe, at least independent Claims 1 and 30 of the '199 Patent.

Claim 1

423. Emerge's Accused Products are virtual reality viewers for use with a mobile electronic device having a touchscreen.

424. Emerge's Accused Products comprise a first lens and a second lens, wherein the first lens is facing the same direction as the second lens, and wherein the first lens and the second lens are spaced apart in a horizontal direction.

425. Emerge's Accused Products comprise a frame having a first side and a second side opposite the first side, the first side configured to hold the first lens and the second lens, the second side configured to receive the mobile electronic device, wherein the frame is configured to hold the mobile electronic device such that the mobile electronic device is generally centered in a horizontal direction and directly in a user's field of view when looking through the first side of the frame.

426. Emerge's Accused Products include a touchscreen input constructed of material and having a surface such that only a portion of the surface of the touchscreen input is configured to contact a central region of the touchscreen of the mobile electronic device when the touchscreen input is activated.

427. Emerge's Accused Products likely also infringe dependent Claims 2, 4-6, and 16-27 of the '199 Patent.

Claim 30

428. Emerge's Accused Products are virtual reality viewers for use with a mobile electronic device having a touchscreen.

429. Emerge's Accused Products comprise a first lens and a second lens, wherein the first lens is facing the same direction as the second lens, and wherein the first lens and the second lens are spaced apart in a horizontal direction.

430. Emerge's Accused Products comprise a frame having a first side and a second side opposite the first side, the first side configured to hold the first lens and the second lens, the second side configured to receive the mobile electronic device, wherein the frame is configured to hold the mobile electronic device such that the mobile electronic device is generally centered in a horizontal direction and directly in a user's field of view when looking through the first side of the frame.

431. Emerge's Accused Products include a user input that is accessible from an exterior of the enclosure and has a first position and a second position.

432. Emerge's Accused Products include a touchscreen input that is coupled to the user input and generally centered between the first lens and the second lens in the horizontal direction, wherein the touchscreen has a surface such that only a portion of the surface of the touchscreen input is configured to contact a central region of the touchscreen when the user input is in the second position.

433. Emerge's Accused Products likely also infringe dependent Claims 33-35 and 37-40 of the '199 Patent.

434. To the extent required by law, DDC has complied with, and requires each licensee to comply with, the provisions of 35 U.S.C. § 287.

435. Emerge's direct infringement as described above has injured and will continue to injure DDC as long as such infringement continues.

436. DDC is entitled to recover damages adequate to compensate it for such infringement but in no event less than a reasonable royalty for Emerge's infringement of the '199 Patent, together with interest and costs (including any damages that may be available for a presently undeterminable period prior to issuance of the '199 Patent).

COUNT XXI:
GOOGLE'S INDUCED INFRINGEMENT OF UNITED STATES PATENT NO. 10,528,199

437. DDC realleges and incorporates by reference paragraphs 1-135 and 356-436, inclusive, as though fully set forth herein.

438. Google induced, and continues to induce, Defendants (and other entities that make, sell, offer to sell, import, or use virtual reality viewers with the same or similar features) to directly infringe the '199 Patent.

439. Google actively encouraged, and continues to encourage, infringement of the '199 Patent through, *inter alia*, the dissemination of its Specifications and other WWGC Program documents, wherein Google improperly identifies the Google Cardboard V2 Viewer "open source" (in violation of the '199 Patent).

440. Google knew that its actions induced others – including Defendants, WWGC Program members, and any entity with access to its documents published online that suggested that Google Cardboard V2 Viewer specifications were "open source" – to directly infringe the '199 Patent.

441. Google's encouraging acts actually resulted in, and continue to result in, direct infringement of the '199 Patent (by Defendants and other third parties).

442. To the extent required by law, DDC has complied with, and requires each licensee to comply with, the provisions of 35 U.S.C. § 287.

443. Upon information and belief, Google had knowledge of the '199 Patent prior to its issuance and as early as its publication on May 10, 2018.

444. Google's induced infringement as described above has injured and will continue to injure DDC as long as such infringement continues.

445. DDC is entitled to recover damages adequate to compensate it for such infringement but in no event less than a reasonable royalty for Google's infringement of the '199 Patent, together with interest and costs (including any damages that may be available for a presently undeterminable period prior to issuance of the '199 Patent).

446. DDC requests that Google be determined jointly and severally liable for any and all damages awarded against any other Defendant for direct infringement of the '199 Patent as set forth in Counts XVI-XX.

COUNT XXII:
LANDSBERG'S DIRECT INFRINGEMENT OF UNITED STATES PATENT NO. 11,093,000

447. DDC realleges and incorporates by reference paragraphs 1-135, inclusive, as though fully set forth herein.

448. Landsberg's use, import, sale, offers for sale, and manufacture of the Accused Products directly infringed, and continue to infringe, at least independent Claim 1 of the '000 Patent.

Claim 1

449. Landsberg's Accused Products are virtual reality apparatuses.

450. Landsberg's Accused Products comprise a housing having a portion configured to receive a mobile electronic device having a touchscreen display.

451. Said housing further includes two lenses.

452. Landsberg's Accused Products include an input device accessible from an exterior of the housing.

453. Landsberg's Accused Products include a contact element located within an interior of the housing, the contact element coupled to the input device and configured to generate a detectable touch event at the touchscreen display of the mobile electronic device.

454. Landsberg's Accused Products likely also infringe dependent Claims 2-11, 13-14, 18-24, and 27-33 of the '000 Patent.

455. To the extent required by law, DDC has complied with, and requires each licensee to comply with, the provisions of 35 U.S.C. § 287.

456. Landsberg's direct infringement as described above has injured and will continue to injure DDC as long as such infringement continues.

457. DDC is entitled to recover damages adequate to compensate it for such infringement but in no event less than a reasonable royalty for Landsberg's infringement of the '000 Patent, together with interest and costs (including any damages that may be available for a presently undeterminable period prior to issuance of the '000 Patent).

COUNT XXIII:
PYRITE'S DIRECT INFRINGEMENT OF UNITED STATES PATENT NO. 11,093,000

458. DDC realleges and incorporates by reference paragraphs 1-135, inclusive, as though fully set forth herein.

459. Pyrite's use, import, sale, offers for sale, and manufacture of the Pyrite Accused Products directly infringed, and continue to infringe, at least independent Claim 1 of the '000 Patent.

Claim 1

460. Pyrite's Accused Products are virtual reality apparatuses.

461. Pyrite's Accused Products comprise a housing having a portion configured to receive a mobile electronic device having a touchscreen display.

462. Said housing further includes two lenses.

463. Pyrite's Accused Products include an input device accessible from an exterior of the housing.

464. Pyrite's Accused Products include a contact element located within an interior of the housing, the contact element coupled to the input device and configured to generate a detectable touch event at the touchscreen display of the mobile electronic device.

465. Pyrite's Accused Products likely also infringe dependent Claims 2-11, 13-14, 18-24, and 27-33 of the '000 Patent.

466. To the extent required by law, DDC has complied with, and requires each licensee to comply with, the provisions of 35 U.S.C. § 287.

467. Pyrite's direct infringement as described above has injured and will continue to injure DDC as long as such infringement continues.

468. DDC is entitled to recover damages adequate to compensate it for such infringement but in no event less than a reasonable royalty for Pyrite's infringement of the '000 Patent, together with interest and costs (including any damages that may be available for a presently undeterminable period prior to issuance of the '000 Patent).

COUNT XXIV:
STRUCTURAL GRAPHIC'S DIRECT INFRINGEMENT OF UNITED STATES PATENT NO. 11,093,000

469. DDC realleges and incorporates by reference paragraphs 1-135, inclusive, as though fully set forth herein.

470. Structural Graphic's use, import, sale, offers for sale, and manufacture of the Structural Graphic Accused Products directly infringed, and continue to infringe, at least independent Claim 1 of the '000 Patent.

Claim 1

471. Structural Graphic's Accused Products are virtual reality apparatuses.

472. Structural Graphic's Accused Products comprise a housing having a portion configured to receive a mobile electronic device having a touchscreen display.

473. Said housing further includes two lenses.

474. Structural Graphic's Accused Products include an input device accessible from an exterior of the housing.

475. Structural Graphic's Accused Products include a contact element located within an interior of the housing, the contact element coupled to the input device and configured to generate a detectable touch event at the touchscreen display of the mobile electronic device.

476. Structural Graphic's Accused Products likely also infringe dependent Claims 2-11, 13-14, 18-24, and 27-33 of the '000 Patent.

477. To the extent required by law, DDC has complied with, and requires each licensee to comply with, the provisions of 35 U.S.C. § 287.

478. Structural Graphic's direct infringement as described above has injured and will continue to injure DDC as long as such infringement continues.

479. DDC is entitled to recover damages adequate to compensate it for such infringement but in no event less than a reasonable royalty for Structural Graphic's infringement of the '000 Patent, together with interest and costs (including any damages that may be available for a presently undeterminable period prior to issuance of the '000 Patent).

COUNT XXV:
HOMIDO'S DIRECT INFRINGEMENT OF UNITED STATES PATENT NO. 11,093,000

480. DDC realleges and incorporates by reference paragraphs 1-135, inclusive, as though fully set forth herein.

481. Homido's use, import, sale, offer for sale, importation and/or manufacture of the Homido Accused Products directly infringed, and continues to infringe, at least independent Claim 1 of the '000 Patent.

Claim 1

482. Homido's Accused Products are virtual reality apparatuses.

483. Homido's Accused Products comprise a housing having a portion configured to receive a mobile electronic device having a touchscreen display.

484. Said housing further includes two lenses.

485. Homido's Accused Products include an input device accessible from an exterior of the housing.

486. Homido's Accused Products include a contact element located within an interior of the housing, the contact element coupled to the input device and configured to generate a detectable touch event at the touchscreen display of the mobile electronic device.

487. Homido's Accused Products likely also infringe dependent Claims 2-11, 13-14, 18-24, and 27-33 of the '000 Patent.

488. To the extent required by law, DDC has complied with, and requires each licensee to comply with, the provisions of 35 U.S.C. § 287.

489. Homido's direct infringement as described above has injured and will continue to injure DDC as long as such infringement continues.

490. DDC is entitled to recover damages adequate to compensate it for such infringement but in no event less than a reasonable royalty for Homido's infringement of the '000 Patent, together with interest and costs (including any damages that may be available for a presently undeterminable period prior to issuance of the '000 Patent).

COUNT XXVI:
EMERGE'S DIRECT INFRINGEMENT OF UNITED STATES PATENT NO. 11,093,000

491. DDC realleges and incorporates by reference paragraphs 1-135, inclusive, as though fully set forth herein.

492. Emerge's use, import, sale, offer for sale, importation and/or manufacture of the Emerge Accused Products directly infringed, and continues to infringe, at least independent Claim 1 of the '000 Patent.

Claim 1

493. Emerge's Accused Products are virtual reality apparatuses.

494. Emerge's Accused Products comprise a housing having a portion configured to receive a mobile electronic device having a touchscreen display.

495. Said housing further includes two lenses.

496. Emerge's Accused Products include an input device accessible from an exterior of the housing.

497. Emerge's Accused Products include a contact element located within an interior of the housing, the contact element coupled to the input device and configured to generate a detectable touch event at the touchscreen display of the mobile electronic device.

498. Emerge's Accused Products likely also infringe dependent Claims 2-11, 13-14, 18-24, and 27-33 of the '000 Patent.

499. To the extent required by law, DDC has complied with, and requires each licensee to comply with, the provisions of 35 U.S.C. § 287.

500. Emerge's direct infringement as described above has injured and will continue to injure DDC as long as such infringement continues.

501. DDC is entitled to recover damages adequate to compensate it for such infringement but in no event less than a reasonable royalty for Emerge's infringement of the '000 Patent, together with interest and costs (including any damages that may be available for a presently undeterminable period prior to issuance of the '000 Patent).

COUNT XXVII:
GOOGLE'S INDUCED INFRINGEMENT OF UNITED STATES PATENT NO. 11,093,000

502. DDC realleges and incorporates by reference paragraphs 1-135 and 447-501, inclusive, as though fully set forth herein.

503. Google induced, and continues to induce, Defendants (and other entities that make, sell, offer to sell, import, or use virtual reality viewers with the same or similar features) to directly infringe the '000 Patent.

504. Google actively encouraged, and continues to encourage, infringement of the '000 Patent through, *inter alia*, the dissemination of its Specifications and other WWGC Program documents, wherein Google improperly identifies Google Cardboard V2 Viewer as "open source" (in violation of the '000 Patent).

505. Google knew that its actions induced others – including Defendants, WWGC Program members, and any entity with access to its documents published online that suggested that Google Cardboard V2 Viewer specifications were "open source" – to directly infringe the '000 Patent.

506. Google's encouraging acts actually resulted in, and continue to result in, direct infringement of the '000 Patent (by Defendants and other third parties).

507. To the extent required by law, DDC has complied with, and requires each licensee to comply with, the provisions of 35 U.S.C. § 287.

508. Upon information and belief, Google had knowledge of the '000 Patent prior to its issuance and as early as its publication on June 11, 2020.

509. Google's induced infringement as described above has injured and will continue to injure DDC as long as such infringement continues.

510. DDC is entitled to recover damages adequate to compensate it for such infringement but in no event less than a reasonable royalty for Google's infringement of the '000 Patent, together with interest and costs (including any damages that may be available for a presently undeterminable period prior to issuance of the '000 Patent).

511. DDC requests that Google be determined jointly and severally liable for any and all damages awarded against any other Defendant for direct infringement of the '000 Patent as set forth in Counts XXII-XXVI.

COUNT XXVIII:
LANDSBERG'S DIRECT INFRINGEMENT OF UNITED STATES PATENT NO. 11,093,001

512. DDC realleges and incorporates by reference paragraphs 1-135, inclusive, as though fully set forth herein.

513. Landsberg's use, import, sale, offers for sale, and manufacture of the Landsberg Accused Products directly infringed, and continue to infringe, at least independent Claims 1 and 21 of the '001 Patent.

Claim 1

514. Landsberg's Accused Products are apparatuses.

515. Landsberg's Accused Products comprise a housing having a portion configured to receive a mobile electronic device having a touchscreen display.

516. Said housing further includes multiple lenses.

517. Landsberg's Accused Products include an input device accessible from an exterior of the housing.

518. Landsberg's Accused Products include a contact element located within an interior of the housing, the contact element responsive to the input device and the contact element moveable within the interior of the housing between at least a first position and a second position, wherein in the second position a surface of the contact element is configured to generate a detectable touch event at the touch-screen display of the mobile electronic device.

519. Landsberg's Accused Products likely also infringe dependent Claims 2-5, 7-13, and 16-20 of the '001 Patent.

Claim 21

520. Landsberg's Accused Products are apparatuses.

521. Landsberg's Accused Products comprise a housing having a portion configured to receive a mobile electronic device having a touchscreen display.

522. Said housing further includes multiple lenses.

523. Landsberg's Accused Products include an input device accessible from an exterior of the housing.

524. Landsberg's Accused Products include a contact element located within an interior of the housing, the contact element electro-mechanically coupled, via a linkage element, to the input device, the contact element moveable within the interior of the housing between at least a first position and a second position, wherein in the second position the contact element is configured to generate a touch event at the touch-screen of the mobile electronic device.

525. Landsberg's Accused Products likely also infringe dependent Claims 22-23 and 25-29 of the '001 Patent.

526. To the extent required by law, DDC has complied with, and requires each licensee to comply with, the provisions of 35 U.S.C. § 287.

527. Landsberg's direct infringement as described above has injured and will continue to injure DDC as long as such infringement continues.

528. DDC is entitled to recover damages adequate to compensate it for such infringement but in no event less than a reasonable royalty for Landsberg's infringement of the '001 Patent, together with interest and costs (including any damages that may be available for a presently undeterminable period prior to issuance of the '001 Patent).

COUNT XXIX:
PYRITE'S DIRECT INFRINGEMENT OF UNITED STATES PATENT NO. 11,093,001

529. DDC realleges and incorporates by reference paragraphs 1-135, inclusive, as though fully set forth herein.

530. Pyrite's use, import, sale, offers for sale, and manufacture of the Pyrite Accused Products directly infringed, and continue to infringe, at least independent Claims 1 and 21 of the '001 Patent.

Claim 1

531. Pyrite's Accused Products are apparatuses.

532. Pyrite's Accused Products comprise a housing having a portion configured to receive a mobile electronic device having a touchscreen display.

533. Said housing further includes multiple lenses.

534. Pyrite's Accused Products include an input device accessible from an exterior of the housing.

535. Pyrite's Accused Products include a contact element located within an interior of the housing, the contact element responsive to the input device and the contact element moveable within the interior of the housing between at least a first position and a second position, wherein in the second position a surface of the contact element is configured to generate a detectable touch event at the touch-screen display of the mobile electronic device.

536. Pyrite's Accused Products likely also infringe dependent Claims 2-5, 7-13, and 16-20 of the '001 Patent.

Claim 21

537. Pyrite's Accused Products are apparatuses.

538. Pyrite's Accused Products comprise a housing having a portion configured to receive a mobile electronic device having a touchscreen display.

539. Said housing further includes multiple lenses.

540. Pyrite's Accused Products include an input device accessible from an exterior of the housing.

541. Pyrite's Accused Products include a contact element located within an interior of the housing, the contact element electro-mechanically coupled, via a linkage element, to the input device, the contact element moveable within the interior of the housing between at least a first position and a second position, wherein in the second position the contact element is configured to generate a touch event at the touch-screen of the mobile electronic device.

542. Pyrite's Accused Products likely also infringe dependent Claims 22-23 and 25-29 of the '001 Patent.

543. To the extent required by law, DDC has complied with, and requires each licensee to comply with, the provisions of 35 U.S.C. § 287.

544. Pyrite's direct infringement as described above has injured and will continue to injure DDC as long as such infringement continues.

545. DDC is entitled to recover damages adequate to compensate it for such infringement but in no event less than a reasonable royalty for Pyrite's infringement of the '001 Patent, together with interest and costs (including any damages that may be available for a presently undeterminable period prior to issuance of the '001 Patent).

COUNT XXX:
STRUCTURAL GRAPHICS' DIRECT INFRINGEMENT OF UNITED STATES PATENT NO. 11,093,001

546. DDC realleges and incorporates by reference paragraphs 1-135, inclusive, as though fully set forth herein.

547. Structural Graphics' use, import, sale, offers for sale, and manufacture of the Structural Graphics Accused Products directly infringed, and continue to infringe, at least independent Claims 1 and 21 of the '001 Patent.

Claim 1

548. Structural Graphics' Accused Products are apparatuses.

549. Structural Graphics' Accused Products comprise a housing having a portion configured to receive a mobile electronic device having a touchscreen display.

550. Said housing further includes multiple lenses.

551. Structural Graphics' Accused Products include an input device accessible from an exterior of the housing.

552. Structural Graphics' Accused Products include a contact element located within an interior of the housing, the contact element responsive to the input device and the contact element moveable within the interior of the housing between at least a first position and a second position, wherein in the second position a surface of the contact element is configured to generate a detectable touch event at the touch-screen display of the mobile electronic device.

553. Structural Graphics' Accused Products likely also infringe dependent Claims 2-5, 7-13, and 16-20 of the '001 Patent.

Claim 21

554. Structural Graphics' Accused Products are apparatuses.

555. Structural Graphics' Accused Products comprise a housing having a portion configured to receive a mobile electronic device having a touchscreen display.

556. Said housing further includes multiple lenses.

557. Structural Graphics' Accused Products include an input device accessible from an exterior of the housing.

558. Structural Graphics' Accused Products include a contact element located within an interior of the housing, the contact element electro-mechanically coupled, via a linkage element, to the input device, the contact element moveable within the interior of the housing between at least a first position and a second position, wherein in the second position the contact element is configured to generate a touch event at the touch-screen of the mobile electronic device.

559. Structural Graphics' Accused Products likely also infringe dependent Claims 22-23 and 25-29 of the '001 Patent.

560. To the extent required by law, DDC has complied with, and requires each licensee to comply with, the provisions of 35 U.S.C. § 287.

561. Structural Graphics' direct infringement as described above has injured and will continue to injure DDC as long as such infringement continues.

562. DDC is entitled to recover damages adequate to compensate it for such infringement but in no event less than a reasonable royalty for Structural Graphics' infringement of the '001 Patent, together with interest and costs (including any damages that may be available for a presently undeterminable period prior to issuance of the '001 Patent).

COUNT XXXI:
HOMIDO'S DIRECT INFRINGEMENT OF UNITED STATES PATENT NO. 11,093,001

563. DDC realleges and incorporates by reference paragraphs 1-135, inclusive, as though fully set forth herein.

564. Homido's use, import, sale, offer for sale, importation and/or manufacture of the Homido Accused Products directly infringed, and continues to infringe, at least independent Claims 1 and 21 of the '001 Patent.

Claim 1

565. Homido's Accused Products are apparatuses.

566. Homido's Accused Products comprise a housing having a portion configured to receive a mobile electronic device having a touchscreen display.

567. Said housing further includes multiple lenses.

568. Homido's Accused Products include an input device accessible from an exterior of the housing.

569. Homido's Accused Products include a contact element located within an interior of the housing, the contact element responsive to the input device and the contact element moveable within the interior of the housing between at least a first position and a second position, wherein

in the second position a surface of the contact element is configured to generate a detectable touch event at the touch-screen display of the mobile electronic device.

570. Homido's Accused Products likely also infringe dependent Claims 2-5, 7-13, and 16-20 of the '001 Patent.

Claim 21

571. Homido's Accused Products are apparatuses.

572. Homido's Accused Products comprise a housing having a portion configured to receive a mobile electronic device having a touchscreen display.

573. Said housing further includes multiple lenses.

574. Homido's Accused Products include an input device accessible from an exterior of the housing.

575. Homido's Accused Products include a contact element located within an interior of the housing, the contact element electro-mechanically coupled, via a linkage element, to the input device, the contact element moveable within the interior of the housing between at least a first position and a second position, wherein in the second position the contact element is configured to generate a touch event at the touch-screen of the mobile electronic device.

576. Homido's Accused Products likely also infringe dependent Claims 22-23 and 25-29 of the '001 Patent.

577. To the extent required by law, DDC has complied with, and requires each licensee to comply with, the provisions of 35 U.S.C. § 287.

578. Homido's direct infringement as described above has injured and will continue to injure DDC as long as such infringement continues.

579. DDC is entitled to recover damages adequate to compensate it for such infringement but in no event less than a reasonable royalty for Homido's infringement of the '001

Patent, together with interest and costs (including any damages that may be available for a presently undeterminable period prior to issuance of the '001 Patent).

COUNT XXXII:
EMERGE'S DIRECT INFRINGEMENT OF UNITED STATES PATENT NO. 11,093,001

580. DDC realleges and incorporates by reference paragraphs 1-135, inclusive, as though fully set forth herein.

581. Emerge's use, import, sale, offer for sale, importation and/or manufacture of the Emerge Accused Products directly infringed, and continues to infringe, at least independent Claims 1 and 21 of the '001 Patent.

Claim 1

582. Emerge's Accused Products are apparatuses.

583. Emerge's Accused Products comprise a housing having a portion configured to receive a mobile electronic device having a touchscreen display.

584. Said housing further includes multiple lenses.

585. Emerge's Accused Products include an input device accessible from an exterior of the housing.

586. Emerge's Accused Products include a contact element located within an interior of the housing, the contact element responsive to the input device and the contact element moveable within the interior of the housing between at least a first position and a second position, wherein in the second position a surface of the contact element is configured to generate a detectable touch event at the touch-screen display of the mobile electronic device.

587. Emerge's Accused Products likely also infringe dependent Claims 2-5, 7-13, and 16-20 of the '001 Patent.

Claim 21

588. Emerge's Accused Products are apparatuses.

589. Emerge's Accused Products comprise a housing having a portion configured to receive a mobile electronic device having a touchscreen display.

590. Said housing further includes multiple lenses.

591. Emerge's Accused Products include an input device accessible from an exterior of the housing.

592. Emerge's Accused Products include a contact element located within an interior of the housing, the contact element electro-mechanically coupled, via a linkage element, to the input device, the contact element moveable within the interior of the housing between at least a first position and a second position, wherein in the second position the contact element is configured to generate a touch event at the touch-screen of the mobile electronic device.

593. Emerge's Accused Products likely also infringe dependent Claims 22-23 and 25-29 of the '001 Patent.

594. To the extent required by law, DDC has complied with, and requires each licensee to comply with, the provisions of 35 U.S.C. § 287.

595. Emerge's direct infringement as described above has injured and will continue to injure DDC as long as such infringement continues.

596. DDC is entitled to recover damages adequate to compensate it for such infringement but in no event less than a reasonable royalty for Emerge's infringement of the '001 Patent, together with interest and costs (including any damages that may be available for a presently undeterminable period prior to issuance of the '001 Patent).

COUNT XXXIII:
GOOGLE'S INDUCED INFRINGEMENT OF UNITED STATES PATENT NO. 11,093,001

597. DDC realleges and incorporates by reference paragraphs 1-135 and 512-596, inclusive, as though fully set forth herein.

598. Google induced, and continues to induce, Defendants (and other entities that make, sell, offer to sell, import, or use virtual reality viewers with the same or similar features) to directly infringe the '001 Patent.

599. Google actively encouraged, and continues to encourage, infringement of the '001 Patent through, *inter alia*, the dissemination of its Specifications and other WWGC Program documents, wherein Google improperly identifies the Google Cardboard V2 Viewer "open source" (in violation of the '001 Patent).

600. Google knew that its actions induced others – including Defendants, WWGC Program members, and any entity with access to its documents published online that suggested that Google Cardboard V2 Viewer specifications were "open source" – to directly infringe the '001 Patent.

601. Google's encouraging acts actually resulted in, and continue to result in, direct infringement of the '001 Patent (by Defendants and other third parties).

602. To the extent required by law, DDC has complied with, and requires each licensee to comply with, the provisions of 35 U.S.C. § 287.

603. Upon information and belief, Google had knowledge of the '001 Patent prior to its issuance and as early as its publication on August 5, 2021.

604. Google's induced infringement as described above has injured and will continue to injure DDC as long as such infringement continues.

605. DDC is entitled to recover damages adequate to compensate it for such infringement but in no event less than a reasonable royalty for Google's infringement of the '001 Patent, together with interest and costs (including any damages that may be available for a presently undeterminable period prior to issuance of the '001 Patent).

606. DDC requests that Google be determined jointly and severally liable for any and all damages awarded against any other Defendant for direct infringement of the '001 Patent as set forth in Counts XXVIII-XXXII.

PRAYER FOR RELIEF

WHEREFORE, Plaintiff DDC Technology, LLC respectfully requests this Court to enter judgment against Google, jointly and severally, and against Defendants Landsberg, Pyrite, Structural Graphics, Homido, and Emerge, and against each of their subsidiaries, predecessors, successors, parents, affiliates, officers, directors, agents, servants, employees, and all persons in active concert or participation with them – granting the following relief:

A. The entry of judgment in favor of DDC and against Defendants that the Asserted Patents are valid, enforceable, and infringed by Defendants;

B. An award of damages against Defendants adequate to compensate DDC for the infringement that has occurred, but in no event less than a reasonable royalty as permitted by 35 U.S.C. § 284, together with prejudgment interest from the date the infringement began;

C. An award of treble damages against Google (and any other applicable Defendant) for its willful infringement of the Asserted Patents;

D. An award of Plaintiff's attorneys' fees against Google (and any other applicable Defendant) as provided by 35 U.S.C. § 285;

E. An injunction against Defendants prohibiting any further infringement of the Asserted Patents;

F. An accounting of all costs associated with the filing and maintenance of this action incurred by DDC; and

G. Such other relief to which DDC is entitled under the law and any other and further relief that this Court or a jury may deem just and proper.

JURY DEMAND

Plaintiff DDC Technology, LLC demands a trial by jury on all issues so triable.

Dated: June 10, 2022

Respectfully submitted,

/s/ Timothy J. Haller

Timothy J. Haller
3125265IL
HALLER LAW PLLC
230 E Delaware Pl, Ste 5E
Chicago, IL 60611
Email: haller@haller-iplaw.com
Telephone: (630) 336-4283

Gabriel I. Opatken (*Pro Hac Vice Pending*)
NOBLE IP LLC
4151 W School St, Apt 2
Chicago, IL 60641
Email: gabriel@nobleipllc.com
Telephone: (773) 648-5433

Attorneys for Plaintiff,
DDC Technology, LLC

Of Counsel:
Steven E. Aldous
State Bar: 00982100
FORSHEY PROSTOK LLP
500 Crescent Ct, Ste 240
Dallas, TX 75201
Email: saldous@forsheyprostok.com
Telephone: (214) 716-2101