US010528199B2

(12) **United States Patent**
Buckley

(10) **Patent No.: US 10,528,199 B2**
(45) **Date of Patent: *Jan. 7, 2020**

(54) **VIRTUAL REALITY VIEWER AND INPUT MECHANISM**

(71) Applicant: **DDC TECHNOLOGY, LLC**, Austin, TX (US)

(72) Inventor: **Patrick Buckley**, Mill Valley, CA (US)

(73) Assignee: **DDC TECHNOLOGY, LLC**, Austin, TX (US)

(*) Notice: Subject to any disclaimer, the term of this patent is extended or adjusted under 35 U.S.C. 154(b) by 0 days.

This patent is subject to a terminal disclaimer.

(21) Appl. No.: **15/726,079**

(22) Filed: **Oct. 5, 2017**

(65) **Prior Publication Data**

US 2018/0129321 A1 May 10, 2018

Related U.S. Application Data

(63) Continuation of application No. 15/448,785, filed on Mar. 3, 2017, now Pat. No. 9,811,184, which is a (Continued)

(51) **Int. Cl.**
G02B 27/01 (2006.01)
G06F 3/044 (2006.01)
(Continued)

(52) **U.S. Cl.**
CPC ***G06F 3/044*** (2013.01); ***G02B 7/021*** (2013.01); ***G02B 27/017*** (2013.01);
(Continued)

(58) **Field of Classification Search**
CPC G02B 24/01–2027/0198
(Continued)

(56) **References Cited**

U.S. PATENT DOCUMENTS

2,789,460 A 4/1957 Kaufman
5,877,459 A 3/1999 Prater
(Continued)

OTHER PUBLICATIONS

Pace, Tony, "Google Cardboard DIY Guide," Jul. 1, 2014 (available at http://hacklabtaichung.blogspot.com/2014/07/google-cardboard-diy-guide.html).

(Continued)

Primary Examiner — Michael Pervan

(57) **ABSTRACT**

The present invention concerns virtual reality viewers for use with touchscreen enabled mobile devices. The virtual reality viewer comprises: a housing configured to receive a mobile electronic device within an interior of the housing; and an input mechanism that is accessible from an exterior of the housing and that is moveable within the interior between a first position and an extended position, wherein a surface of the input mechanism is configured to contact the touch-screen of the mobile electronic device when in the extended position. The disclosed systems and methods facilitate receiving user inputs on the exterior of the housing and providing the user inputs to the touchscreen within the housing using the electro-mechanical input mechanism. Accordingly, the viewer can be used with a variety of smartphones without requiring magnetic switches or a wireless/cable connection between the input device and the smartphone.

40 Claims, 10 Drawing Sheets

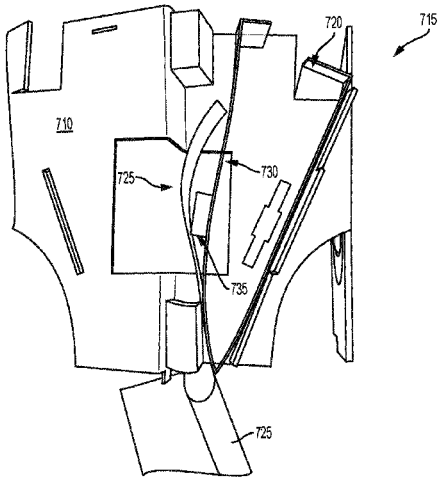

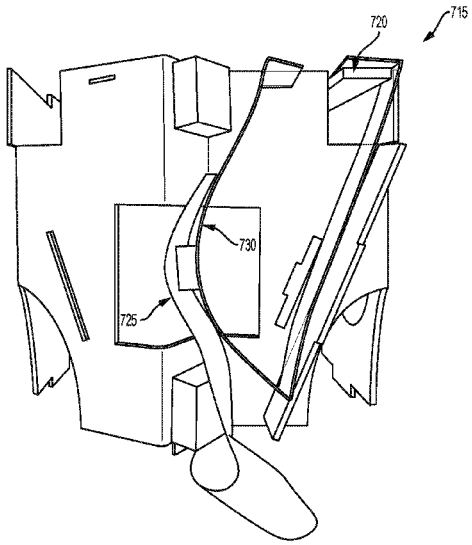

Related U.S. Application Data

continuation of application No. 15/209,397, filed on Jul. 13, 2016, now Pat. No. 9,723,117, which is a continuation of application No. 14/801,606, filed on Jul. 16, 2015, now Pat. No. 9,420,075.

(60) Provisional application No. 62/161,857, filed on May 14, 2015, provisional application No. 62/025,376, filed on Jul. 16, 2014.

(51) **Int. Cl.**

G06T 19/00	(2011.01)
H04M 1/02	(2006.01)
H04M 1/21	(2006.01)
H04M 1/04	(2006.01)
G06F 1/16	(2006.01)
G06F 3/01	(2006.01)
G06F 3/041	(2006.01)
H04M 1/05	(2006.01)
G02B 27/22	(2018.01)
G06F 3/0354	(2013.01)
G06F 3/038	(2013.01)
G02B 7/02	(2006.01)

(52) **U.S. Cl.**
CPC ***G02B 27/0176*** (2013.01); ***G02B 27/2228*** (2013.01); ***G06F 1/163*** (2013.01); ***G06F 3/011*** (2013.01); ***G06F 3/017*** (2013.01); ***G06F 3/038*** (2013.01); ***G06F 3/03547*** (2013.01); ***G06F 3/041*** (2013.01); ***G06T 19/006*** (2013.01); ***H04M 1/0266*** (2013.01); ***H04M 1/04*** (2013.01); ***H04M 1/05*** (2013.01); ***H04M 1/21*** (2013.01); *G02B 2027/0178* (2013.01)

(58) **Field of Classification Search**
USPC 345/7–9; 359/464, 466, 804
See application file for complete search history.

(56) **References Cited**

U.S. PATENT DOCUMENTS

8,957,835	B2	2/2015	Hoellwarth	
9,176,325	B2	11/2015	Lyons	
D750,074	S	2/2016	Coz	
9,274,340	B2	3/2016	Lyons	
9,377,626	B2	6/2016	Lyons	
9,405,126	B1	8/2016	Margolin	
9,420,075	B2	8/2016	Buckley	
9,423,827	B2	8/2016	Compton	
9,723,117	B2	8/2017	Buckley	
9,811,184	B2	11/2017	Buckley	
2009/0046141	A1	2/2009	Nojiri et al.	
2011/0162894	A1	7/2011	Pance	
2011/0164000	A1	7/2011	Pance	
2012/0128995	A1	5/2012	Leto	
2012/0139879	A1	6/2012	Kim	
2012/0146957	A1	6/2012	Dunagan	
2013/0002606	A1	1/2013	Mann	
2013/0141360	A1	6/2013	Compton	
2013/0249870	A1	9/2013	Slaby	
2014/0152531	A1*	6/2014	Murray	G06F 1/1632 345/8
2014/0247246	A1	9/2014	Maus	
2014/0375531	A1	12/2014	Latypov	
2015/0194131	A1*	7/2015	Kim	G09G 5/14 345/545
2015/0235426	A1	8/2015	Lyons	
2015/0339468	A1	11/2015	Son	
2015/0348327	A1	12/2015	Zalewski	
2015/0364113	A1	12/2015	Ahn	
2016/0054802	A1	2/2016	Dickerson	
2016/0055680	A1	2/2016	Kim	
2016/0062514	A1	3/2016	Jo	
2016/0063767	A1	3/2016	Lee	
2016/0063919	A1	3/2016	Ha	
2016/0066295	A1	3/2016	Han	
2016/0084647	A1	3/2016	Lee	
2016/0086386	A1	3/2016	Son	
2016/0142703	A1	5/2016	Park	
2016/0154494	A1	6/2016	Kim	
2016/0180591	A1	6/2016	Shiu	
2016/0224176	A1	8/2016	Kim	
2016/0232879	A1	8/2016	Han	
2016/0238851	A1	8/2016	Jeong	
2016/0255748	A1	9/2016	Kim	
2016/0262608	A1	9/2016	Krueger	
2017/0269733	A1	9/2017	Buckley	
2018/0292665	A1	10/2018	Al et al.	
2018/0292666	A1	10/2018	Kong	

OTHER PUBLICATIONS

Unknown, "Adding a capacitive lever to a google cardboard 1 (on the cheap)," Jul. 6, 2015 (available at https://www.youtube.com/watch?v=kgJpRtnqQPQ).

Signe Brewster, "Why Google Cardboard is Actually a Huge Boost for Virtual Reality" Gigaom (Jun. 28, 2014) with comments, https://gigaom.com/2014/06/28/why-googlecardboard-is-actually-a-huge-boost-for-virtual-reality (last visited Jan. 15, 2018).

Video File of Prince Aryajeet Ramteke , "Use Google Cardboard Without Magnetometer (Enabling Magnetic Ring Support to Every Device)" Youtube (May 10, 2015), https://www.youtube.com/watch?v=o_Pk_kipYto (last visited Mar. 8, 2018).

GoogleDevelopers, "Google I/O 2014—Cardboard: VR for Android" YouTube (Jun. 27, 2014), https://www.youtube.com/watch?time_continue=2&v=DFog2gMnm44 (last visited Mar. 8, 2018).

"Why Google Cardboard is actually a huge boost for virtual reality" Internet Archive (Jul. 15, 2014), https://web.archive.org/web/20140715204200/https://gigaom.com/2014/06/28/why-google-cardboard-is-actually-a-huge-boostfor-virtual-reality/ (last visited Jan. 15, 2018).

"Comments on: Why Google Cardboard is actually a huge boost for virtual reality" Internet Archive (Jul. 15, 2014), https://web.archive.org/web/20140715204200/https://gigaom.com/2014/06/28/why-google-cardboard-is-actually-a-huge-boostfor-virtual-reality/feed (last visited Jan. 15, 2018).

Petition for Post Grant Review, PGR2018-00019, Paper No. 2 (Jan. 15, 2018).

Petition for Post Grant Review, PGR2018-00020, Paper No. 2 (Jan. 15, 2018).

Petition for Inter Partes Review, IPR2018-00494, Paper No. 2 (Jan. 15, 2018).

Declaration of Kurtis Keller, IPR2018-00494, Exh. 1002 (Jan. 15, 2018).

Declaration of Kurtis Keller, PRG2018-00019, Exh. 1002 (Jan. 15, 2018).

Declaration of Kurtis Keller, PGR2018-00020, Exh. 1002 (Jan. 15, 2018).

Declaration of Prince Ramteke, PGR2018-00019, Exh. 1022 (Jan. 15, 2018).

Declaration of Prince Ramteke, PGR2018-00020, Exh. 1023 (Jan. 15, 2018).

Declaration of Prince Ramteke, IPR2018-00494, Exh. 1021 (Jan. 15, 2018).

Declaration of Kyle Flemming, PGR2018-00019, Exh. No. 1023 (Jan. 15, 2018).

Declaration of Kyle Flemming, PGR2018-00020, Exh. No. 1024 (Jan. 15, 2018).

Declaration of Kyle Flemming, IPR2018-00494, Exh. No. 1022 (Jan. 15, 2018).

United States Patent and Trademark Office, Before the Patent Trial and Appeal Board, Case No. PGR2018-00020 filed for U.S. Pat. No. 9,811,184 between *Merchsource, LLC* (Petitioner) v. *DDC Technology, LLC*. (Patent Owner), Notice of Deposition of Kurtis Keller, filed on Nov. 19, 2018 , 3 pages.

(56) **References Cited**

OTHER PUBLICATIONS

United States Patent and Trademark Office, Before the Patent Trial and Appeal Board, Case No. PGR2018-00020 filed for U.S. Pat. No. 9,811,184 between *Merchsource, LLC* (Petitioner) v. *DDC Technology, LLC*. (Patent Owner), Motion for Authorization to Conduct Discovery of Youtube LLC, filed on Jan. 14, 2019, 12 pages.
United States Patent and Trademark Office, Before the Patent Trial and Appeal Board, Case No. PGR2018-00020 filed for U.S. Pat. No. 9,811,184 between *Merchsource, LLC* (Petitioner) v. *DDC Technology, LLC*. (Patent Owner), meetup.com Virtual Reality Meetup No. 12, Exhibit# 2049, filed on Dec. 17, 2018, 7 pages.
United States Patent and Trademark Office, Before the Patent Trial and Appeal Board, Case No. PGR2018-00020 filed for U.S. Pat. No. 9,811,184 between *Merchsource, LLC* (Petitioner) v. *DDC Technology, LLC*. (Patent Owner), meetup.com Browser-Based Virtual Reality, Exhibit# 2050, filed on Dec. 17, 2018, 12 pages.
United States Patent and Trademark Office, Before the Patent Trial and Appeal Board, Case No. PGR2018-00020 filed for U.S. Pat. No. 9,811,184 between *Merchsource, LLC* (Petitioner) v. *DDC Technology, LLC*. (Patent Owner), KTVU Part 2, Exhibit# 2033, filed on Dec. 17, 2018, 1 pages.
United States Patent and Trademark Office, Before the Patent Trial and Appeal Board, Case No. PGR2018-00020 filed for U.S. Pat. No. 9,811,184 between *Merchsource, LLC* (Petitioner) v. *DDC Technology, LLC*. (Patent Owner), KTVU Part 1, Exhibit# 2033, filed on Dec. 17, 2018, 1 pages.
United States Patent and Trademark Office, Before the Patent Trial and Appeal Board, Case No. PGR2018-00020 filed for U.S. Pat. No. 9,811,184 between *Merchsource, LLC* (Petitioner) v. *DDC Technology, LLC*. (Patent Owner), Kickstarter Video, Exhibit# 2041, filed on Dec. 18, 2018, 1 pages.
United States Patent and Trademark Office, Before the Patent Trial and Appeal Board, Case No. PGR2018-00020 filed for U.S. Pat. No. 9,811,184 between *Merchsource, LLC* (Petitioner) v. *DDC Technology, LLC*. (Patent Owner), Kickstarter Projects, Exhibit# 2017, filed on Dec. 17, 2018, 2 pages.
United States Patent and Trademark Office, Before the Patent Trial and Appeal Board, Case No. PGR2018-00020 filed for U.S. Pat. No. 9,811,184 between *Merchsource, LLC* (Petitioner) v. *DDC Technology, LLC*. (Patent Owner), Kickstarter Order, Exhibit# 2023, filed on Dec. 17, 2018, 1 pages.
United States Patent and Trademark Office, Before the Patent Trial and Appeal Board, Case No. PGR2018-00020 filed for U.S. Pat. No. 9,811,184 between *Merchsource, LLC* (Petitioner) v. *DDC Technology, LLC*. (Patent Owner), Kickstarter—DIY, Exhibit# 2018, filed on Dec. 17, 2018, 20 pages.
United States Patent and Trademark Office, Before the Patent Trial and Appeal Board, Case No. PGR2018-00020 filed for U.S. Pat. No. 9,811,184 between *Merchsource, LLC* (Petitioner) v. *DDC Technology, LLC*. (Patent Owner), Joint Stipulation Regarding Petitioner's Motion for Additional Discovery and Potential Deposition of Thirdparty Witness, filed on Jan. 24, 2019, 4 pages.
United States Patent and Trademark Office, Before the Patent Trial and Appeal Board, Case No. PGR2018-00020 filed for U.S. Pat. No. 9,811,184 between *Merchsource, LLC* (Petitioner) v. *DDC Technology, LLC*. (Patent Owner), Internet TV News Archive—Virtual Reality, Exhibit# 2048, filed on Dec. 17, 2018, 4 pages.
United States Patent and Trademark Office, Before the Patent Trial and Appeal Board, Case No. PGR2018-00020 filed for U.S. Pat. No. 9,811,184 between *Merchsource, LLC* (Petitioner) v. *DDC Technology, LLC*. (Patent Owner), Internet TV News Archive—Virtual Reality Cardboard, Exhibit# 2045, filed on Dec. 17, 2018, 3 pages.
United States Patent and Trademark Office, Before the Patent Trial and Appeal Board, Case No. PGR2018-00020 filed for U.S. Pat. No. 9,811,184 between *Merchsource, LLC* (Petitioner) v. *DDC Technology, LLC*. (Patent Owner), Internet TV News Archive—Cardboard Button, Exhibit# 2046, filed on Dec. 17, 2018, 2 pages.
United States Patent and Trademark Office, Before the Patent Trial and Appeal Board, Case No. PGR2018-00020 filed for U.S. Pat. No. 9,811,184 between *Merchsource, LLC* (Petitioner) v. *DDC Technology, LLC*. (Patent Owner), Internet Archive Gigaom Search—Virutal Reality, Exhibit# 1031, filed on Mar. 18, 2019, 3 pages.
United States Patent and Trademark Office, Before the Patent Trial and Appeal Board, Case No. PGR2018-00020 filed for U.S. Pat. No. 9,811,184 between *Merchsource, LLC* (Petitioner) v. *DDC Technology, LLC*. (Patent Owner), Google Analytics Product Coupon Report, Exhibit# 2026, filed on Dec. 17, 2018, 1 pages.
United States Patent and Trademark Office, Before the Patent Trial and Appeal Board, Case No. PGR2018-00020 filed for U.S. Pat. No. 9,811,184 between *Merchsource, LLC* (Petitioner) v. *DDC Technology, LLC*. (Patent Owner), Google Analytics Overview Report, Exhibit# 2025, filed on Dec. 17, 2018, 1 pages.
United States Patent and Trademark Office, Before the Patent Trial and Appeal Board, Case No. PGR2018-00020 filed for U.S. Pat. No. 9,811,184 between *Merchsource, LLC* (Petitioner) v. *DDC Technology, LLC*. (Patent Owner), FICTIV Part 2, Exhibit# 2019, filed on Dec. 17, 2018, 1 pages.
United States Patent and Trademark Office, Before the Patent Trial and Appeal Board, Case No. PGR2018-00020 filed for U.S. Pat. No. 9,811,184 between *Merchsource, LLC* (Petitioner) v. *DDC Technology, LLC*. (Patent Owner), FICTIV Part 1, Exhibit# 2019, filed on Dec. 17, 2018, 11 pages.
United States Patent and Trademark Office, Before the Patent Trial and Appeal Board, Case No. PGR2018-00020 filed for U.S. Pat. No. 9,811,184 between *Merchsource, LLC* (Petitioner) v. *DDC Technology, LLC*. (Patent Owner), Ex. 3002, Exhibit# 3002, filed on May 9, 2018, 2 pages.
United States Patent and Trademark Office, Before the Patent Trial and Appeal Board, Case No. PGR2018-00020 filed for U.S. Pat. No. 9,811,184 between *Merchsource, LLC* (Petitioner) v. *DDC Technology, LLC*. (Patent Owner), Ex. 3001, Exhibit# 3001, filed on Apr. 13, 2018, 2 pages.
United States Patent and Trademark Office, Before the Patent Trial and Appeal Board, Case No. PGR2018-00020 filed for U.S. Pat. No. 9,811,184 between *Merchsource, LLC* (Petitioner) v. *DDC Technology, LLC*. (Patent Owner), Dodocasecom Webpage With VR Instructional Video, Exhibit# 2044, filed on Dec. 17, 2018, 4 pages.
United States Patent and Trademark Office, Before the Patent Trial and Appeal Board, Case No. PGR2018-00020 filed for U.S. Pat. No. 9,811,184 between *Merchsource, LLC* (Petitioner) v. *DDC Technology, LLC*. (Patent Owner), Declaration of Prince Ramteke, Exhibit# 1023, filed on Jan. 15, 2018, 1 pages.
United States Patent and Trademark Office, Before the Patent Trial and Appeal Board, Case No. PGR2018-00020 filed for U.S. Pat. No. 9,811,184 between *Merchsource, LLC* (Petitioner) v. *DDC Technology, LLC*. (Patent Owner), Declaration of Nathan Evans, Exhibit# 2042, filed on Dec. 17, 2018, 4 pages.
United States Patent and Trademark Office, Before the Patent Trial and Appeal Board, Case No. PGR2018-00020 filed for U.S. Pat. No. 9,811,184 between *Merchsource, LLC* (Petitioner) v. *DDC Technology, LLC*. (Patent Owner), Declaration of Mark C. Johnson, Exhibit# 1034, filed on Mar. 18, 2019, 2 pages.
United States Patent and Trademark Office, Before the Patent Trial and Appeal Board, Case No. PGR2018-00020 filed for U.S. Pat. No. 9,811,184 between *Merchsource, LLC* (Petitioner) v. *DDC Technology, LLC*. (Patent Owner), Declaration of Kyle Fleming, Exhibit# 1024, filed on Jan. 15, 2018, 4 pages.
United States Patent and Trademark Office, Before the Patent Trial and Appeal Board, Case No. PGR2018-00020 filed for U.S. Pat. No. 9,811,184 between *Merchsource, LLC* (Petitioner) v. *DDC Technology, LLC*. (Patent Owner), Declaration of Kyle B. Fleming, Exhibit# 1026, filed on Dec. 17, 2018, 4 pages.
United States Patent and Trademark Office, Before the Patent Trial and Appeal Board, Case No. PGR2018-00020 filed for U.S. Pat. No. 9,811,184 between *Merchsource, LLC* (Petitioner) v. *DDC Technology, LLC*. (Patent Owner), Declaration of Kurtis Keller, Exhibit# 1002, filed on Jan. 15, 2018, 84 pages.
United States Patent and Trademark Office, Before the Patent Trial and Appeal Board, Case No. PGR2018-00020 filed for U.S. Pat. No. 9,811,184 between *Merchsource, LLC* (Petitioner) v. *DDC Technology, LLC*. (Patent Owner), Declaration of Kevin Quat, Exhibit# 2015, filed on Dec. 17, 2018, 3 pages.

(56) **References Cited**

OTHER PUBLICATIONS

United States Patent and Trademark Office, Before the Patent Trial and Appeal Board, Case No. PGR2018-00020 filed for U.S. Pat. No. 9,811,184 between *Merchsource, LLC* (Petitioner) v. *DDC Technology, LLC.* (Patent Owner), Declaration of Gabriel I. Opatken in Support of Patent Owners Motion for Pro Hac Vice Admission, Exhibit# 2014, filed on Jan. 18, 2019, 4 pages.
United States Patent and Trademark Office, Before the Patent Trial and Appeal Board, Case No. PGR2018-00020 filed for U.S. Pat. No. 9,811,184 between *Merchsource, LLC* (Petitioner) v. *DDC Technology, LLC.* (Patent Owner), Declaration of Chris Cassin, Exhibit# 2016, filed on Dec. 17, 2018, 3 pages.
United States Patent and Trademark Office, Before the Patent Trial and Appeal Board, Case No. PGR2018-00020 filed for U.S. Pat. No. 9,811,184 between *Merchsource, LLC* (Petitioner) v. *DDC Technology, LLC.* (Patent Owner), Declaration of Aakash Parekh, Exhibit# 2052, filed on Dec. 17, 2018, 6 pages.
United States Patent and Trademark Office, Before the Patent Trial and Appeal Board, Case No. PGR2018-00020 filed for U.S. Pat. No. 9,811,184 between *Merchsource, LLC* (Petitioner) v. *DDC Technology, LLC.* (Patent Owner), Dec. 3, 2014 Tweet, Exhibit# 2034, filed on Dec. 17, 2018, 1 pages.
United States Patent and Trademark Office, Before the Patent Trial and Appeal Board, Case No. PGR2018-00020 filed for U.S. Pat. No. 9,811,184 between *Merchsource, LLC* (Petitioner) v. *DDC Technology, LLC.* (Patent Owner), CV of Kyle B. Fleming, Exhibit# 1027, filed on Dec. 17, 2018, 8 pages.
United States Patent and Trademark Office, Before the Patent Trial and Appeal Board, Case No. PGR2018-00020 filed for U.S. Pat. No. 9,811,184 between *Merchsource, LLC* (Petitioner) v. *DDC Technology, LLC.* (Patent Owner), CV Kurtis Keller, Exhibit# 1003, filed on Jan. 15, 2018, 5 pages.
United States Patent and Trademark Office, Before the Patent Trial and Appeal Board, Case No. PGR2018-00020 filed for U.S. Pat. No. 9,811,184 between *Merchsource, LLC* (Petitioner) v. *DDC Technology, LLC.* (Patent Owner), Contract Between Dodocase and Regan Arts, Exhibit# 2027, filed on Dec. 17, 2018, 1 pages.
United States Patent and Trademark Office, Before the Patent Trial and Appeal Board, Case No. PGR2018-00020 filed for U.S. Pat. No. 9,811,184 between *Merchsource, LLC* (Petitioner) v. *DDC Technology, LLC.* (Patent Owner), Assignment to DDC Technology, LLC, Exhibit# 2013, filed on Nov. 9, 2018, 3 pages.
United States Patent and Trademark Office, Before the Patent Trial and Appeal Board, Case No. PGR2018-00020 filed for U.S. Pat. No. 9,811,184 between *Merchsource, LLC* (Petitioner) v. *DDC Technology, LLC.* (Patent Owner), Assembly Instruction Video, Part 8, Exhibit# 2038, filed on Dec. 18, 2018, 1 pages.
United States Patent and Trademark Office, Before the Patent Trial and Appeal Board, Case No. PGR2018-00020 filed for U.S. Pat. No. 9,811,184 between *Merchsource, LLC* (Petitioner) v. *DDC Technology, LLC.* (Patent Owner), Assembly Instruction Video, Part 7, Exhibit# 2038, filed on Dec. 18, 2018, 1 pages.
United States Patent and Trademark Office, Before the Patent Trial and Appeal Board, Case No. PGR2018-00020 filed for U.S. Pat. No. 9,811,184 between *Merchsource, LLC* (Petitioner) v. *DDC Technology, LLC.* (Patent Owner), Assembly Instruction Video, Part 6, Exhibit# 2038, filed on Dec. 18, 2018, 1 pages.
United States Patent and Trademark Office, Before the Patent Trial and Appeal Board, Case No. PGR2018-00020 filed for U.S. Pat. No. 9,811,184 between *Merchsource, LLC* (Petitioner) v. *DDC Technology, LLC.* (Patent Owner), Assembly Instruction Video, Part 5, Exhibit# 2038, filed on Dec. 18, 2018, 1 pages.
United States Patent and Trademark Office, Before the Patent Trial and Appeal Board, Case No. PGR2018-00020 filed for U.S. Pat. No. 9,811,184 between *Merchsource, LLC* (Petitioner) v. *DDC Technology, LLC.* (Patent Owner), Assembly Instruction Video, Part 4, Exhibit# 2038, filed on Dec. 18, 2018, 1 pages.
United States Patent and Trademark Office, Before the Patent Trial and Appeal Board, Case No. PGR2018-00020 filed for U.S. Pat. No. 9,811,184 between *Merchsource, LLC* (Petitioner) v. *DDC Technology, LLC.* (Patent Owner), Assembly Instruction Video, Part 3, Exhibit# 2038, filed on Dec. 18, 2018, 1 pages.
United States Patent and Trademark Office, Before the Patent Trial and Appeal Board, Case No. PGR2018-00020 filed for U.S. Pat. No. 9,811,184 between *Merchsource, LLC* (Petitioner) v. *DDC Technology, LLC.* (Patent Owner), Assembly Instruction Video, Part 2, Exhibit# 2038, filed on Dec. 18, 2018, 1 pages.
United States Patent and Trademark Office, Before the Patent Trial and Appeal Board, Case No. PGR2018-00020 filed for U.S. Pat. No. 9,811,184 between *Merchsource, LLC* (Petitioner) v. *DDC Technology, LLC.* (Patent Owner), Assembly Instruction Video, Part 11, Exhibit# 2038, filed on Dec. 18, 2018, 1 pages.
United States Patent and Trademark Office, Before the Patent Trial and Appeal Board, Case No. PGR2018-00020 filed for U.S. Pat. No. 9,811,184 between *Merchsource, LLC* (Petitioner) v. *DDC Technology, LLC.* (Patent Owner), Assembly Instruction Video, Part 10, Exhibit# 2038, filed on Dec. 18, 2018, 1 pages.
United States Patent and Trademark Office, Before the Patent Trial and Appeal Board, Case No. PGR2018-00020 filed for U.S. Pat. No. 9,811,184 between *Merchsource, LLC* (Petitioner) v. *DDC Technology, LLC.* (Patent Owner), Amazon Part 2, Exhibit# 2021, filed on Dec. 17, 2018, 5 pages.
United States Patent and Trademark Office, Before the Patent Trial and Appeal Board, Case No. PGR2018-00020 filed for U.S. Pat. No. 9,811,184 between *Merchsource, LLC* (Petitioner) v. *DDC Technology, LLC.* (Patent Owner), Amazon Part 1, Exhibit# 2021, filed on Dec. 17, 2018, 10 pages.
United States Patent and Trademark Office, Before the Patent Trial and Appeal Board, Case No. PGR2018-00020 filed for U.S. Pat. No. 9,811,184 between *Merchsource, LLC* (Petitioner) v. *DDC Technology, LLC.* (Patent Owner), Acknowledgment of PO for 50000, Exhibit# 2029, filed on Dec. 17, 2018, 2 pages.
United States Patent and Trademark Office, Before the Patent Trial and Appeal Board, Case No. PGR2018-00020 filed for U.S. Pat. No. 9,811,184 between *Merchsource, LLC* (Petitioner) v. *DDC Technology, LLC.* (Patent Owner), Acknowledgment for 30000, Exhibit# 2030, filed on Dec. 17, 2018, 2 pages.
United States Patent and Trademark Office, Before the Patent Trial and Appeal Board, Case No. PGR2018-00019 filed for U.S. Pat. No. 9,723,117 between *Merchsource, LLC* (Petitioner) v. *DDC Technology, LLC.* (Patent Owner), HTML5 Meetup, Exhibit# 2050, filed on Dec. 17, 2018, 12 pages.
United States Patent and Trademark Office, Before the Patent Trial and Appeal Board, Case No. PGR2018-00019 filed for U.S. Pat. No. 9,723,117 between *Merchsource, LLC* (Petitioner) v. *DDC Technology, LLC.* (Patent Owner), Google Analytics Product Coupon, Exhibit# 2026, filed on Dec. 17, 2018, 1 pages.
United States Patent and Trademark Office, Before the Patent Trial and Appeal Board, Case No. PGR2018-00019 filed for U.S. Pat. No. 9,723,117 between *Merchsource, LLC* (Petitioner) v. *DDC Technology, LLC.* (Patent Owner), Google Analytics Commerce, Exhibit# 2025, filed on Dec. 17, 2018, 1 pages.
United States Patent and Trademark Office, Before the Patent Trial and Appeal Board, Case No. PGR2018-00019 filed for U.S. Pat. No. 9,723,117 between *Merchsource, LLC* (Petitioner) v. *DDC Technology, LLC.* (Patent Owner), FICTIV, Part 2, Exhibit# 2019, filed on Dec. 17, 2018, 1 pages.
United States Patent and Trademark Office, Before the Patent Trial and Appeal Board, Case No. PGR2018-00019 filed for U.S. Pat. No. 9,723,117 between *Merchsource, LLC* (Petitioner) v. *DDC Technology, LLC.* (Patent Owner), FICTIV, Part 1, Exhibit# 2019, filed on Dec. 17, 2018, 11 pages.
United States Patent and Trademark Office, Before the Patent Trial and Appeal Board, Case No. PGR2018-00019 filed for U.S. Pat. No. 9,723,117 between *Merchsource, LLC* (Petitioner) v. *DDC Technology, LLC.* (Patent Owner), Exhibit# 2012, filed on May 25, 2018, 8 pages.

(56) **References Cited**

OTHER PUBLICATIONS

United States Patent and Trademark Office, Before the Patent Trial and Appeal Board, Case No. PGR2018-00019 filed for U.S. Pat. No. 9,723,117 between *Merchsource, LLC* (Petitioner) v. *DDC Technology, LLC*. (Patent Owner), Exhibit# 2011, filed on May 25, 2018, 25 pages.
United States Patent and Trademark Office, Before the Patent Trial and Appeal Board, Case No. PGR2018-00019 filed for U.S. Pat. No. 9,723,117 between *Merchsource, LLC* (Petitioner) v. *DDC Technology, LLC*. (Patent Owner), Exhibit# 2010, filed on May 25, 2018, 3 pages.
United States Patent and Trademark Office, Before the Patent Trial and Appeal Board, Case No. PGR2018-00019 filed for U.S. Pat. No. 9,723,117 between *Merchsource, LLC* (Petitioner) v. *DDC Technology, LLC*. (Patent Owner), Exhibit# 2009, filed on May 25, 2018, 2 pages.
United States Patent and Trademark Office, Before the Patent Trial and Appeal Board, Case No. PGR2018-00019 filed for U.S. Pat. No. 9,723,117 between *Merchsource, LLC* (Petitioner) v. *DDC Technology, LLC*. (Patent Owner), Exhibit# 2008, filed on May 25, 2018, 1 pages.
United States Patent and Trademark Office, Before the Patent Trial and Appeal Board, Case No. PGR2018-00019 filed for U.S. Pat. No. 9,723,117 between *Merchsource, LLC* (Petitioner) v. *DDC Technology, LLC*. (Patent Owner), Exhibit# 2007, filed on May 25, 2018, 9 pages.
United States Patent and Trademark Office, Before the Patent Trial and Appeal Board, Case No. PGR2018-00019 filed for U.S. Pat. No. 9,723,117 between *Merchsource, LLC* (Petitioner) v. *DDC Technology, LLC*. (Patent Owner), Exhibit# 2006, filed on May 25, 2018, 2 pages.
United States Patent and Trademark Office, Before the Patent Trial and Appeal Board, Case No. PGR2018-00019 filed for U.S. Pat. No. 9,723,117 between *Merchsource, LLC* (Petitioner) v. *DDC Technology, LLC*. (Patent Owner), Exhibit# 2005, filed on May 25, 2018, 4 pages.
United States Patent and Trademark Office, Before the Patent Trial and Appeal Board, Case No. PGR2018-00019 filed for U.S. Pat. No. 9,723,117 between *Merchsource, LLC* (Petitioner) v. *DDC Technology, LLC*. (Patent Owner), Exhibit# 2004, filed on May 25, 2018, 3 pages.
United States Patent and Trademark Office, Before the Patent Trial and Appeal Board, Case No. PGR2018-00019 filed for U.S. Pat. No. 9,723,117 between *Merchsource, LLC* (Petitioner) v. *DDC Technology, LLC*. (Patent Owner), Exhibit# 2003, filed on May 25, 2018, 2 pages.
United States Patent and Trademark Office, Before the Patent Trial and Appeal Board, Case No. PGR2018-00019 filed for U.S. Pat. No. 9,723,117 between *Merchsource, LLC* (Petitioner) v. *DDC Technology, LLC*. (Patent Owner), Exhibit# 2002, filed on May 25, 2018, 1 pages.
United States Patent and Trademark Office, Before the Patent Trial and Appeal Board, Case No. PGR2018-00019 filed for U.S. Pat. No. 9,723,117 between *Merchsource, LLC* (Petitioner) v. *DDC Technology, LLC*. (Patent Owner), Exhibit# 2001, filed on May 25, 2018, 1 pages.
United States Patent and Trademark Office, Before the Patent Trial and Appeal Board, Case No. PGR2018-00019 filed for U.S. Pat. No. 9,723,117 between *Merchsource, LLC* (Petitioner) v. *DDC Technology, LLC*. (Patent Owner), Exhibit# 2001, filed on Apr. 27, 2018, 18 pages.
United States Patent and Trademark Office, Before the Patent Trial and Appeal Board, Case No. PGR2018-00019 filed for U.S. Pat. No. 9,723,117 between *Merchsource, LLC* (Petitioner) v. *DDC Technology, LLC*. (Patent Owner), Exhibit of Nathan Evans, Exhibit# 2042, filed on Dec. 17, 2018, 4 pages.
United States Patent and Trademark Office, Before the Patent Trial and Appeal Board, Case No. PGR2018-00019 filed for U.S. Pat. No. 9,723,117 between *Merchsource, LLC* (Petitioner) v. *DDC Technology, LLC*. (Patent Owner), Ex. 3002, Exhibit#3002, filed on May 9, 2018, 2 pages.
United States Patent and Trademark Office, Before the Patent Trial and Appeal Board, Case No. PGR2018-00019 filed for U.S. Pat. No. 9,723,117 between *Merchsource, LLC* (Petitioner) v. *DDC Technology, LLC*. (Patent Owner), Ex. 3001, Exhibit#3001, filed on Apr. 13, 2018, 2 pages.
United States Patent and Trademark Office, Before the Patent Trial and Appeal Board, Case No. PGR2018-00019 filed for U.S. Pat. No. 9,723,117 between *Merchsource, LLC* (Petitioner) v. *DDC Technology, LLC*. (Patent Owner), DIY Virtual Reality for the Masses, Exhibit# 2018, filed on Dec. 17, 2018, 20 pages.
United States Patent and Trademark Office, Before the Patent Trial and Appeal Board, Case No. PGR2018-00019 filed for U.S. Pat. No. 9,723,117 between *Merchsource, LLC* (Petitioner) v. *DDC Technology, LLC*. (Patent Owner), Declaration of Prince Aryajeet Milind Ramteke, Exhibit# 1022, filed on Jan. 15, 2018, 1 pages.
United States Patent and Trademark Office, Before the Patent Trial and Appeal Board, Case No. PGR2018-00019 filed for U.S. Pat. No. 9,723,117 between *Merchsource, LLC* (Petitioner) v. *DDC Technology, LLC*. (Patent Owner), Declaration of Kyle B. Fleming, Exhibit# 1025, filed on Dec. 17, 2018, 4 pages.
United States Patent and Trademark Office, Before the Patent Trial and Appeal Board, Case No. PGR2018-00019 filed for U.S. Pat. No. 9,723,117 between *Merchsource, LLC* (Petitioner) v. *DDC Technology, LLC*. (Patent Owner), Declaration of Kyle B. Fleming, Exhibit# 1023, filed on Jan. 15, 2018, 4 pages.
United States Patent and Trademark Office, Before the Patent Trial and Appeal Board, Case No. PGR2018-00019 filed for U.S. Pat. No. 9,723,117 between *Merchsource, LLC* (Petitioner) v. *DDC Technology, LLC*. (Patent Owner), Declaration of Kurtis Keller, Exhibit# 1002, filed on Jan. 15, 2018, 83 pages.
United States Patent and Trademark Office, Before the Patent Trial and Appeal Board, Case No. PGR2018-00019 filed for U.S. Pat. No. 9,723,117 between *Merchsource, LLC* (Petitioner) v. *DDC Technology, LLC*. (Patent Owner), Declaration of Kevin Quat, Exhibit# 2015, filed on Dec. 17, 2018, 3 pages.
United States Patent and Trademark Office, Before the Patent Trial and Appeal Board, Case No. PGR2018-00019 filed for U.S. Pat. No. 9,723,117 between *Merchsource, LLC* (Petitioner) v. *DDC Technology, LLC*. (Patent Owner), Declaration of Gabriel I. Opatken in Support of Patent Owners Motion for Pro Hac Vice Admission, Exhibit# 2014, filed on Jan. 18, 2019, 4 pages.
United States Patent and Trademark Office, Before the Patent Trial and Appeal Board, Case No. PGR2018-00019 filed for U.S. Pat. No. 9,723,117 between *Merchsource, LLC* (Petitioner) v. *DDC Technology, LLC*. (Patent Owner), Declaration of Aakash Parekh, Exhibit# 2052, filed on Dec. 17, 2018, 6 pages.
United States Patent and Trademark Office, Before the Patent Trial and Appeal Board, Case No. PGR2018-00019 filed for U.S. Pat. No. 9,723,117 between *Merchsource, LLC* (Petitioner) v. *DDC Technology, LLC*. (Patent Owner), Declaration of Chris Cassin, Exhibit# 2016, filed on Dec. 17, 2018, 3 pages.
United States Patent and Trademark Office, Before the Patent Trial and Appeal Board, Case No. PGR2018-00019 filed for U.S. Pat. No. 9,723,117 between *Merchsource, LLC* (Petitioner) v. *DDC Technology, LLC*. (Patent Owner), CV of Kyle B. Fleming, Exhibit# 1026, filed on Dec. 17, 2018, 8 pages.
United States Patent and Trademark Office, Before the Patent Trial and Appeal Board, Case No. PGR2018-00019 filed for U.S. Pat. No. 9,723,117 between *Merchsource, LLC* (Petitioner) v. *DDC Technology, LLC*. (Patent Owner), CV of Kurtis Keller, Exhibit# 1003, filed on Jan. 15, 2018, 5 pages.
United States Patent and Trademark Office, Before the Patent Trial and Appeal Board, Case No. PGR2018-00019 filed for U.S. Pat. No. 9,723,117 between *Merchsource, LLC* (Petitioner) v. *DDC Technology, LLC*. (Patent Owner), Cardboard Button, Exhibit# 2046, filed on Dec. 17, 2018, 2 pages.

(56) **References Cited**

OTHER PUBLICATIONS

United States Patent and Trademark Office, Before the Patent Trial and Appeal Board, Case No. PGR2018-00019 filed for U.S. Pat. No. 9,723,117 between *Merchsource, LLC* (Petitioner) v. *DDC Technology, LLC*. (Patent Owner), Assignment to DDC Technology, LLC, Exhibit# 2013, filed on Nov. 9, 2018, 3 pages.
United States Patent and Trademark Office, Before the Patent Trial and Appeal Board, Case No. PGR2018-00019 filed for U.S. Pat. No. 9,723,117 between *Merchsource, LLC* (Petitioner) v. *DDC Technology, LLC*. (Patent Owner), Assembly Instruction Video, Part 8, Exhibit# 2038, filed on Dec. 18, 2018, 1 pages.
United States Patent and Trademark Office, Before the Patent Trial and Appeal Board, Case No. PGR2018-00019 filed for U.S. Pat. No. 9,723,117 between *Merchsource, LLC* (Petitioner) v. *DDC Technology, LLC*. (Patent Owner), Assembly Instruction Video, Part 7, Exhibit# 2038, filed on Dec. 18, 2018, 1 pages.
United States Patent and Trademark Office, Before the Patent Trial and Appeal Board, Case No. PGR2018-00019 filed for U.S. Pat. No. 9,723,117 between *Merchsource, LLC* (Petitioner) v. *DDC Technology, LLC*. (Patent Owner), Assembly Instruction Video, Part 6, Exhibit# 2038, filed on Dec. 18, 2018, 1 pages.
United States Patent and Trademark Office, Before the Patent Trial and Appeal Board, Case No. PGR2018-00019 filed for U.S. Pat. No. 9,723,117 between *Merchsource, LLC* (Petitioner) v. *DDC Technology, LLC*. (Patent Owner), Assembly Instruction Video, Part 5, Exhibit# 2038, filed on Dec. 18, 2018, 1 pages.
United States Patent and Trademark Office, Before the Patent Trial and Appeal Board, Case No. PGR2018-00019 filed for U.S. Pat. No. 9,723,117 between *Merchsource, LLC* (Petitioner) v. *DDC Technology, LLC*. (Patent Owner), Assembly Instruction Video, Part 4, Exhibit# 2038, filed on Dec. 18, 2018, 1 pages.
United States Patent and Trademark Office, Before the Patent Trial and Appeal Board, Case No. PGR2018-00019 filed for U.S. Pat. No. 9,723,117 between *Merchsource, LLC* (Petitioner) v. *DDC Technology, LLC*. (Patent Owner), Assembly Instruction Video, Part 3, Exhibit# 2038, filed on Dec. 17, 2018, 1 pages.
United States Patent and Trademark Office, Before the Patent Trial and Appeal Board, Case No. PGR2018-00019 filed for U.S. Pat. No. 9,723,117 between *Merchsource, LLC* (Petitioner) v. *DDC Technology, LLC*. (Patent Owner), Assembly Instruction Video, Part 2, Exhibit# 2038, filed on Dec. 17, 2018, 1 pages.
United States Patent and Trademark Office, Before the Patent Trial and Appeal Board, Case No. PGR2018-00019 filed for U.S. Pat. No. 9,723,117 between *Merchsource, LLC* (Petitioner) v. *DDC Technology, LLC*. (Patent Owner), Assembly Instruction Video, Part 11, Exhibit# 2038, filed on Dec. 18, 2018, 1 pages.
United States Patent and Trademark Office, Before the Patent Trial and Appeal Board, Case No. PGR2018-00019 filed for U.S. Pat. No. 9,723,117 between *Merchsource, LLC* (Petitioner) v. *DDC Technology, LLC*. (Patent Owner), Assembly Instruction Video, Part 10, Exhibit# 2038, filed on Dec. 18, 2018, 1 pages.
United States Patent and Trademark Office, Before the Patent Trial and Appeal Board, Case No. PGR2018-00019 filed for U.S. Pat. No. 9,723,117 between *Merchsource, LLC* (Petitioner) v. *DDC Technology, LLC*. (Patent Owner), Amazon, Part 2, Exhibit# 2021, filed on Dec. 17, 2018, 5 pages.
United States Patent and Trademark Office, Before the Patent Trial and Appeal Board, Case No. PGR2018-00019 filed for U.S. Pat. No. 9,723,117 between *Merchsource, LLC* (Petitioner) v. *DDC Technology, LLC*. (Patent Owner), Amazon, Part 1, Exhibit# 2021, filed on Dec. 17, 2018, 10 pages.
United States Patent and Trademark Office, Before the Patent Trial and Appeal Board, Case No. PGR2018-00019 filed for U.S. Pat. No. 9,723,117 between *Merchsource, LLC* (Petitioner) v. *Dodocase, Inc*. (Patent Owner), Power of Attorney for Dodocase VR, Inc, filed on Oct. 9, 2018, 2 pages.
United States Patent and Trademark Office, Before the Patent Trial and Appeal Board, Case No. PGR2018-00019 filed for U.S. Pat. No. 9,723,117 between *Merchsource, LLC* (Petitioner) v. *Dodocase, Inc*. (Patent Owner), Petitioner Merchsource, LLC's Power of Attorney in Post Grant Review, filed on Jan. 15, 2018, 4 pages.
United States Patent and Trademark Office, Before the Patent Trial and Appeal Board, Case No. PGR2018-00019 filed for U.S. Pat. No. 9,723,117 between *Merchsource, LLC* (Petitioner) v. *Dodocase, Inc*. (Patent Owner), Petition for Post Grant Review, filed on Jan. 15, 2018, 79 pages.
United States Patent and Trademark Office, Before the Patent Trial and Appeal Board, Case No. PGR2018-00019 filed for U.S. Pat. No. 9,723,117 between *Merchsource, LLC* (Petitioner) v. *Dodocase, Inc*. (Patent Owner), Amended Mandatory Notices by Patent Owner Under CFR § 42.8(a)(3), filed on Oct. 10, 2018, 3 pages.
United States Patent and Trademark Office, Before the Patent Trial and Appeal Board, Case No. PGR2018-00019 filed for U.S. Pat. No. 9,723,117 between *Merchsource, LLC* (Petitioner) v. *Dodocase VR, Inc*. (Patent Owner), Power of Attorney for Dodocase VR, Inc., filed on Feb. 4, 2018, 2 pages.
United States Patent and Trademark Office, Before the Patent Trial and Appeal Board, Case No. IPR2018-00494 filed for U.S. Pat. No. 9,420,075 between *Merchsource, LLC* (Petitioner) v. *Dodocase, Inc*. (Patent Owner), SFHTML5 Meetup, Part 1, Exhibit# 2040, filed on Dec. 17, 2018, 1 pages.
United States Patent and Trademark Office, Before the Patent Trial and Appeal Board, Case No. IPR2018-00494 filed for U.S. Pat. No. 9,420,075 between *Merchsource, LLC* (Petitioner) v. *Dodocase, Inc*. (Patent Owner), SFHTML5 Meetup, Exhibit# 2050, filed on Dec. 17, 2018, 12 pages.
United States Patent and Trademark Office, Before the Patent Trial and Appeal Board, Case No. IPR2018-00494 filed for U.S. Pat. No. 9,420,075 between *Merchsource, LLC* (Petitioner) v. *Dodocase, Inc*. (Patent Owner), Senate Congressional Record, Exhibit# 2036, filed on Dec. 17, 2018, 3 pages.
United States Patent and Trademark Office, Before the Patent Trial and Appeal Board, Case No. IPR2018-00494 filed for U.S. Pat. No. 9,420,075 between *Merchsource, LLC* (Petitioner) v. *Dodocase, Inc*. (Patent Owner), Second Declaration of Patrick Buckley, Exhibit# 2043, filed on Dec. 17, 2018, 21 pages.
United States Patent and Trademark Office, Before the Patent Trial and Appeal Board, Case No. IPR2018-00494 filed for U.S. Pat. No. 9,420,075 between *Merchsource, LLC* (Petitioner) v. *Dodocase, Inc*. (Patent Owner), Road to VR, Part 2, Exhibit# 2020, filed on Dec. 17, 2018, 6 pages.
United States Patent and Trademark Office, Before the Patent Trial and Appeal Board, Case No. IPR2018-00494 filed for U.S. Pat. No. 9,420,075 between *Merchsource, LLC* (Petitioner) v. *Dodocase, Inc*. (Patent Owner), Roat to VR, Part 1, Exhibit# 2020, filed on Dec. 17, 2018, 4 pages.
United States Patent and Trademark Office, Before the Patent Trial and Appeal Board, Case No. IPR2018-00494 filed for U.S. Pat. No. 9,420,075 between *Merchsource, LLC* (Petitioner) v. *Dodocase, Inc*. (Patent Owner), Purchase Order 50K, Exhibit# 2029, filed on Dec. 17, 2018, 2 pages.
United States Patent and Trademark Office, Before the Patent Trial and Appeal Board, Case No. IPR2018-00494 filed for U.S. Pat. No. 9,420,075 between *Merchsource, LLC* (Petitioner) v. *Dodocase, Inc*. (Patent Owner), Purchase Order 30K, Exhibit# 2030, filed on Dec. 17, 2018, 2 pages.
United States Patent and Trademark Office, Before the Patent Trial and Appeal Board, Case No. IPR2018-00494 filed for U.S. Pat. No. 9,420,075 between *Merchsource, LLC* (Petitioner) v. *Dodocase, Inc*. (Patent Owner), Power of Attorney of DDC Technology, LLC., filed on Nov. 2, 2018, 3 pages.
United States Patent and Trademark Office, Before the Patent Trial and Appeal Board, Case No. IPR2018-00494 filed for U.S. Pat. No. 9,420,075 between *Merchsource, LLC* (Petitioner) v. *Dodocase, Inc*. (Patent Owner), Power of Attorney for Dodocase VR, Inc, filed on Oct. 9, 2018, 2 pages.
United States Patent and Trademark Office, Before the Patent Trial and Appeal Board, Case No. IPR2018-00494 filed for U.S. Pat. No. 9,420,075 between *Merchsource, LLC* (Petitioner) v. *Dodocase, Inc*. (Patent Owner), Photos NYCC, Exhibit# 2031, filed on Dec. 17, 2018, 4 pages.

(56) **References Cited**

OTHER PUBLICATIONS

United States Patent and Trademark Office, Before the Patent Trial and Appeal Board, Case No. IPR2018-00494 filed for U.S. Pat. No. 9,420,075 between *Merchsource, LLC* (Petitioner) v. *Dodocase, Inc.* (Patent Owner), Photos Engadget Expand, Exhibit# 2032, filed on Dec. 17, 2018, 4 pages.
United States Patent and Trademark Office, Before the Patent Trial and Appeal Board, Case No. IPR2018-00494 filed for U.S. Pat. No. 9,420,075 between *Merchsource, LLC* (Petitioner) v. *Dodocase, Inc.* (Patent Owner), Petitioner Merchsource, LLC's Power of Attorney in an Inter Partes Review, filed on Jan. 15, 2018, 3 pages.
United States Patent and Trademark Office, Before the Patent Trial and Appeal Board, Case No. IPR2018-00494 filed for U.S. Pat. No. 9,420,075 between *Merchsource, LLC* (Petitioner) v. *Dodocase, Inc.* (Patent Owner), Petition for Inter Partes Review, filed on Jan. 15, 2018, 82 pages.
United States Patent and Trademark Office, Before the Patent Trial and Appeal Board, Case No. IPR2018-00494 filed for U.S. Pat. No. 9,420,075 between *Merchsource, LLC* (Petitioner) v. *Dodocase, Inc.* (Patent Owner), Patent Owner's Objections to Evidence Submitted With Petition, filed on Sep. 4, 2018, 8 pages.
United States Patent and Trademark Office, Before the Patent Trial and Appeal Board, Case No. IPR2018-00494 filed for U.S. Pat. No. 9,420,075 between *Merchsource, LLC* (Petitioner) v. *Dodocase, Inc.* (Patent Owner), Patent Owner's Motion for Withdrawal and Substitution of Counsel, filed on Oct. 9, 2018, 4 pages.
United States Patent and Trademark Office, Before the Patent Trial and Appeal Board, Case No. IPR2018-00494 filed for U.S. Pat. No. 9,420,075 between *Merchsource, LLC* (Petitioner) v. *Dodocase, Inc.* (Patent Owner), Notice of Filing Date Accorded to Petition and Time for Filing Patent Owner Preliminary Response, mailed on Jan. 26, 2018 Before Amy Kattula, Trial Paralegal, 5 pages.
United States Patent and Trademark Office, Before the Patent Trial and Appeal Board, Case No. IPR2018-00494 filed for U.S. Pat. No. 9,420,075 between *Merchsource, LLC* (Petitioner) v. *Dodocase, Inc.* (Patent Owner), Mandatory Notice by Patent Owner Under 37 CFR § 42.8, filed on Nov. 2, 2018 , 3 pages.
United States Patent and Trademark Office, Before the Patent Trial and Appeal Board, Case No. IPR2018-00494 filed for U.S. Pat. No. 9,420,075 between *Merchsource, LLC* (Petitioner) v. *Dodocase, Inc.* (Patent Owner), Kivu, Part 2, Exhibit# 2033, filed on Dec. 17, 2018, 1 pages.
United States Patent and Trademark Office, Before the Patent Trial and Appeal Board, Case No. IPR2018-00494 filed for U.S. Pat. No. 9,420,075 between *Merchsource, LLC* (Petitioner) v. *Dodocase, Inc.* (Patent Owner), KTVU Sunday Morning, Part 1, Exhibit# 2033, filed on Dec. 17, 2018, 1 pages.
United States Patent and Trademark Office, Before the Patent Trial and Appeal Board, Case No. IPR2018-00494 filed for U.S. Pat. No. 9,420,075 between *Merchsource, LLC* (Petitioner) v. *Dodocase, Inc.* (Patent Owner), Kickstarter Video, Exhibit# 2041, filed on Dec. 17, 2018, 1 pages.
United States Patent and Trademark Office, Before the Patent Trial and Appeal Board, Case No. IPR2018-00494 filed for U.S. Pat. No. 9,420,075 between *Merchsource, LLC* (Petitioner) v. *Dodocase, Inc.* (Patent Owner), Kickstarter Projects, Exhibit# 2017, filed on Dec. 17, 2018, 2 pages.
United States Patent and Trademark Office, Before the Patent Trial and Appeal Board, Case No. IPR2018-00494 filed for U.S. Pat. No. 9,420,075 between *Merchsource, LLC* (Petitioner) v. *Dodocase, Inc.* (Patent Owner), Kickstarter Order, Exhibit# 2023, filed on Dec. 17, 2018, 1 pages.
United States Patent and Trademark Office, Before the Patent Trial and Appeal Board, Case No. IPR2018-00494 filed for U.S. Pat. No. 9,420,075 between *Merchsource, LLC* (Petitioner) v. *Dodocase, Inc.* (Patent Owner), Kickstarter—DIY, Exhibit# 2018, filed on Dec. 17, 2018, 20 pages.
United States Patent and Trademark Office, Before the Patent Trial and Appeal Board, Case No. IPR2018-00494 filed for U.S. Pat. No. 9,420,075 between *Merchsource, LLC* (Petitioner) v. *Dodocase, Inc.* (Patent Owner), Internet Archive Gigaom Search—Virtual Reality, Exhibit# 1031, filed on Mar. 18, 2019, 3 pages.
United States Patent and Trademark Office, Before the Patent Trial and Appeal Board, Case No. IPR2018-00494 filed for U.S. Pat. No. 9,420,075 between *Merchsource, LLC* (Petitioner) v. *Dodocase, Inc.* (Patent Owner), Google Analytics Product, Exhibit# 2026, filed on Dec. 17, 2018, 1 pages.
United States Patent and Trademark Office, Before the Patent Trial and Appeal Board, Case No. IPR2018-00494 filed for U.S. Pat. No. 9,420,075 between *Merchsource, LLC* (Petitioner) v. *Dodocase, Inc.* (Patent Owner), Google Analytics Ecommerce, Exhibit# 2025, filed on Dec. 17, 2018, 1 pages.
United States Patent and Trademark Office, Before the Patent Trial and Appeal Board, Case No. IPR2018-00494 filed for U.S. Pat. No. 9,420,075 between *Merchsource, LLC* (Petitioner) v. *Dodocase, Inc.* (Patent Owner), FICTIV, Part 2, Exhibit# 2019, filed on Dec. 17, 2018, 1 pages.
United States Patent and Trademark Office, Before the Patent Trial and Appeal Board, Case No. IPR2018-00494 filed for U.S. Pat. No. 9,420,075 between *Merchsource, LLC* (Petitioner) v. *Dodocase, Inc.* (Patent Owner), Fictiv, Part. 1, Exhibit# 2019, filed on Dec. 17, 2018, 11 pages.
United States Patent and Trademark Office, Before the Patent Trial and Appeal Board, Case No. IPR2018-00494 filed for U.S. Pat. No. 9,420,075 between *Merchsource, LLC* (Petitioner) v. *Dodocase, Inc.* (Patent Owner), Exhibit# 2012, filed on May 25, 2018, 8 pages.
United States Patent and Trademark Office, Before the Patent Trial and Appeal Board, Case No. IPR2018-00494 filed for U.S. Pat. No. 9,420,075 between *Merchsource, LLC* (Petitioner) v. *Dodocase, Inc.* (Patent Owner), Exhibit# 2011, filed on May 25, 2018, 25 pages.
United States Patent and Trademark Office, Before the Patent Trial and Appeal Board, Case No. IPR2018-00494 filed for U.S. Pat. No. 9,420,075 between *Merchsource, LLC* (Petitioner) v. *Dodocase, Inc.* (Patent Owner), Exhibit# 2010, filed on May 25, 2018, 3 pages.
United States Patent and Trademark Office, Before the Patent Trial and Appeal Board, Case No. IPR2018-00494 filed for U.S. Pat. No. 9,420,075 between *Merchsource, LLC* (Petitioner) v. *Dodocase, Inc.* (Patent Owner), Exhibit# 2009, filed on May 25, 2018, 2 pages.
United States Patent and Trademark Office, Before the Patent Trial and Appeal Board, Case No. IPR2018-00494 filed for U.S. Pat. No. 9,420,075 between *Merchsource, LLC* (Petitioner) v. *Dodocase, Inc.* (Patent Owner), Exhibit# 2008, filed on May 25, 2018, 1 pages.
United States Patent and Trademark Office, Before the Patent Trial and Appeal Board, Case No. IPR2018-00494 filed for U.S. Pat. No. 9,420,075 between *Merchsource, LLC* (Petitioner) v. *Dodocase, Inc.* (Patent Owner), Exhibit# 2007, filed on May 25, 2018, 9 pages.
United States Patent and Trademark Office, Before the Patent Trial and Appeal Board, Case No. IPR2018-00494 filed for U.S. Pat. No. 9,420,075 between *Merchsource, LLC* (Petitioner) v. *Dodocase, Inc.* (Patent Owner), Exhibit# 2006, filed on May 25, 2018, 2 pages.
United States Patent and Trademark Office, Before the Patent Trial and Appeal Board, Case No. IPR2018-00494 filed for U.S. Pat. No. 9,420,075 between *Merchsource, LLC* (Petitioner) v. *Dodocase, Inc.* (Patent Owner), Exhibit# 2005, filed on May 25, 2018, 4 pages.
United States Patent and Trademark Office, Before the Patent Trial and Appeal Board, Case No. IPR2018-00494 filed for U.S. Pat. No. 9,420,075 between *Merchsource, LLC* (Petitioner) v. *Dodocase, Inc.* (Patent Owner), Exhibit# 2004, filed on May 25, 2018, 3 pages.
United States Patent and Trademark Office, Before the Patent Trial and Appeal Board, Case No. IPR2018-00494 filed for U.S. Pat. No. 9,420,075 between *Merchsource, LLC* (Petitioner) v. *Dodocase, Inc.* (Patent Owner), Exhibit# 2003, filed on May 25, 2018, 2 pages.
United States Patent and Trademark Office, Before the Patent Trial and Appeal Board, Case No. IPR2018-00494 filed for U.S. Pat. No. 9,420,075 between *Merchsource, LLC* (Petitioner) v. *Dodocase, Inc.* (Patent Owner), Exhibit# 2002, filed on May 25, 2018, 1 pages.
United States Patent and Trademark Office, Before the Patent Trial and Appeal Board, Case No. IPR2018-00494 filed for U.S. Pat. No. 9,420,075 between *Merchsource, LLC* (Petitioner) v. *Dodocase, Inc.* (Patent Owner), Exhibit# 2001, filed on May 25, 2018, 1 pages.
United States Patent and Trademark Office, Before the Patent Trial and Appeal Board, Case No. IPR2018-00494 filed for U.S. Pat. No. 9,420,075 between *Merchsource, LLC* (Petitioner) v. *Dodocase, Inc.* (Patent Owner), Exhibit# 2001, filed on May 25, 2018, 18 pages.

(56) **References Cited**

OTHER PUBLICATIONS

United States Patent and Trademark Office, Before the Patent Trial and Appeal Board, Case No. IPR2018-00494 filed for U.S. Pat. No. 9,420,075 between *Merchsource, LLC* (Petitioner) v. *Dodocase, Inc.* (Patent Owner), Dodocase VR, Inc.'s Patent Owner Preliminary Response Pursuant to 37 C.F.R. § 42.107(a), filed on May 25, 2018, 36 pages.
United States Patent and Trademark Office, Before the Patent Trial and Appeal Board, Case No. IPR2018-00494 filed for U.S. Pat. No. 9,420,075 between *Merchsource, LLC* (Petitioner) v. *Dodocase, Inc.* (Patent Owner), Declaration of Prince Ramteke, Exhibit# 1021, filed on Jan. 15, 2018, 1 pages.
United States Patent and Trademark Office, Before the Patent Trial and Appeal Board, Case No. IPR2018-00494 filed for U.S. Pat. No. 9,420,075 between *Merchsource, LLC* (Petitioner) v. *Dodocase, Inc.* (Patent Owner), Declaration of Nathan Evans, Exhibit# 2042, filed on Dec. 17, 2018, 4 pages.
United States Patent and Trademark Office, Before the Patent Trial and Appeal Board, Case No. IPR2018-00494 filed for U.S. Pat. No. 9,420,075 between *Merchsource, LLC* (Petitioner) v. *Dodocase, Inc.* (Patent Owner), Declaration of Mark C. Johnson, Exhibit# 1034, filed on Mar. 18, 2019, 2 pages.
United States Patent and Trademark Office, Before the Patent Trial and Appeal Board, Case No. IPR2018-00494 filed for U.S. Pat. No. 9,420,075 between *Merchsource, LLC* (Petitioner) v. *Dodocase, Inc.* (Patent Owner), Declaration of Kyle Fleming, Exhibit# 1022, filed on Jan. 15, 2018, 4 pages.
United States Patent and Trademark Office, Before the Patent Trial and Appeal Board, Case No. IPR2018-00494 filed for U.S. Pat. No. 9,420,075 between *Merchsource, LLC* (Petitioner) v. *Dodocase, Inc.* (Patent Owner), Declaration of Kyle B. Fleming, Exhibit# 1024, filed on Dec. 17, 2018, 4 pages.
United States Patent and Trademark Office, Before the Patent Trial and Appeal Board, Case No. IPR2018-00494 filed for U.S. Pat. No. 9,420,075 between *Merchsource, LLC* (Petitioner) v. *Dodocase, Inc.* (Patent Owner), Declaration of Kurtis Keller, Exhibit# 1002, filed on Jan. 15, 2018, 90 pages.
United States Patent and Trademark Office, Before the Patent Trial and Appeal Board, Case No. IPR2018-00494 filed for U.S. Pat. No. 9,420,075 between *Merchsource, LLC* (Petitioner) v. *Dodocase, Inc.* (Patent Owner), Declaration of Kevin Quat, Exhibit# 2015, filed on Dec. 17, 2018, 3 pages.
In the United States District Court for the Northern District of California San Francisco Division, Case No. 3:17-cv-07088-EDL, *Dodocase VR, Inc.* (*fka Dodocase, Inc.*), Plaintiff v. *Merchsource, LLC et al.*, Defendants., Order, The Honorable Elizabeth D. Laporte, Apr. 12, 2018, 2 pages.
Case No. PGR2018-00020, Mandatory Notices (37 C.F.R. § 42.8(b)), 1 page.
Case No. PGR2018-00019, Mandatory Notices (37 C.F.R. § 42.8(b)), 1 page.
Case No. IPR2018-00494, Mandatory Notices (37 C.F.R. § 42.8(b)), 1 page.
United States Patent and Trademark Office, Before the Patent Trial and Appeal Board, Case No. PGR2018-00019 filed for U.S. Pat. No. 9,723,117 between *Merchsource, LLC* (Petitioner) v. *Dodocase, VR, Inc.* (Patent Owner), Power of Attorney for Dodocase VR, Inc, filed on Mar. 14, 2018, 2 pages.
United States Patent and Trademark Office, Before the Patent Trial and Appeal Board, Case No. PGR2018-00019 filed for U.S. Pat. No. 9,723,117 between *Merchsource, LLC* (Petitioner) v. *Dodocase, VR, Inc.* (Patent Owner), Patent Owner's Objections to Evidence Submitted With Petition, filed on Sep. 4, 2018, 8 pages.
United States Patent and Trademark Office, Before the Patent Trial and Appeal Board, Case No. PGR2018-00019 filed for U.S. Pat. No. 9,723,117 between *Merchsource, LLC* (Petitioner) v. *Dodocase, VR, Inc.* (Patent Owner), Patent Owner's Motion for Withdrawal and Substitution of Counsel, filed on Sep. 4, 2018, 4 pages.
United States Patent and Trademark Office, Before the Patent Trial and Appeal Board, Case No. PGR2018-00019 filed for U.S. Pat. No. 9,723,117 between *Merchsource, LLC* (Petitioner) v. *Dodocase, VR, Inc.* (Patent Owner), Dodocase VR, Inc's Patent Owner Preliminary Response Pursuant to 37 C.F.R. § 42.107(a), filed on May 25, 2018, 36 pages.
United States Patent and Trademark Office, Before the Patent Trial and Appeal Board, Case No. PGR2018-00019 filed for U.S. Pat. No. 9,723,117 between *Merchsource, LLC* (Petitioner) v. *Dodocase, VR, Inc.* (Patent Owner), Before Kalyan K. Deshpande, Patrick M. Boucher and Matthew J. McNeill, Administrative Patent Judges, McNeill, Administrative Patent Judge, Order, Conduct of Proceeding 37 C.F.R. § 42.5, entered on May 1, 2018, 4 pages.
United States Patent and Trademark Office, Before the Patent Trial and Appeal Board, Case No. PGR2018-00019 filed for U.S. Pat. No. 9,723,117 between *Merchsource, LLC* (Petitioner) v. *Dodocase, VR, Inc.* (Patent Owner), Before Kalyan K. Deshpande, Patrick M. Boucher and Matthew J. McNeill, Administrative Patent Judges, Deshpande, Administrative Patent Judge, Scheduling Order, entered on Aug. 22, 2018, 9 pages.
United States Patent and Trademark Office, Before the Patent Trial and Appeal Board, Case No. PGR2018-00019 filed for U.S. Pat. No. 9,723,117 between *Merchsource, LLC* (Petitioner) v. *Dodocase, VR, Inc.* (Patent Owner), Before Kalyan K. Deshpande, Patrick M. Boucher and Matthew J. McNeill, Administrative Patent Judges, Deshpande, Administrative Patent Judge, Order, Granting Patent Owner's Motion for Withdrawal and Substitution of Counsel 37 C.F.R. § 42.10, entered on Oct. 11, 2018, 4 pages.
United States Patent and Trademark Office, Before the Patent Trial and Appeal Board, Case No. PGR2018-00019 filed for U.S. Pat. No. 9,723,117 between *Merchsource, LLC* (Petitioner) v. *Dodocase, VR, Inc.* (Patent Owner), Before Kalyan K. Deshpande, Patrick M. Boucher and Matthew J. McNeill, Administrative Patent Judges, Deshpande, Administrative Patent Judge, Conduct of the Proceeding 37 C.F.R. § 42.5, entered on Sep. 21, 2018, 4 pages.
United States Patent and Trademark Office, Before the Patent Trial and Appeal Board, Case No. PGR2018-00019 filed for U.S. Pat. No. 9,723,117 between *Merchsource, LLC* (Petitioner) v. *Dodocase, VR, Inc.* (Patent Owner), Before Kalyan K. Deshpande, Patrick M. Boucher and Matthew J. McNeill, Administrative Patent Judges, Boucher, Administrative Patent Judge, Order, Granting Patent Owner's Motion for Withdrawal and Substitution of Counsel; Modification of Schedule 37 C.F.R. §§ 42.5, 42.10, entered on Nov. 13, 2018, 7 pages.
United States Patent and Trademark Office, Before the Patent Trial and Appeal Board, Case No. PGR2018-00019 filed for U.S. Pat. No. 9,723,117 between *Merchsource, LLC* (Petitioner) v. *Dodocase, VR, Inc.* (Patent Owner), Before Kalyan K. Deshpande, Patrick M. Boucher and Matthew J. McNeill, Administrative Patent Judges, Boucher, Administrative Patent Judge, Order, Additional Discovery 37 C.F.R. §§ 42.5, 42.51(b)(2), entered on Jan. 29, 2019, 6 pages.
United States Patent and Trademark Office, Before the Patent Trial and Appeal Board, Case No. PGR2018-00019 filed for U.S. Pat. No. 9,723,117 between *Merchsource, LLC* (Petitioner) v. *Dodocase, VR, Inc.* (Patent Owner), Before Kalyan K. Deshpande, Patrick M. Boucher and Matthew J. McNeill, Administrative Patent Judges, Boucher, Administrative Patent Judge, Decision, Institution of Post-Grant Review 35 U.S.C. § 324(a), entered on Aug. 22, 2019, 21 pages.
United States Patent and Trademark Office, Before the Patent Trial and Appeal Board, Case No. PGR2018-00019 filed for U.S. Pat. No. 9,723,117 between *Merchsource, LLC* (Petitioner) v. *Dodocase, VR, Inc.* (Patent Owner), Before Kalyan K. Deshpande and Matthew J. McNeill, Administrative Patent Judges, McNeill, Administrative Patent Judge, Order, Conduct of Proceeding 37 C.F.R. § 42.5, entered on Apr. 13, 2018, 4 pages.
United States Patent and Trademark Office, Before the Patent Trial and Appeal Board, Case No. PGR2018-00019 filed for U.S. Pat. No. 9,723,117 between *Merchsource, LLC* (Petitioner) v. *Dodocase, VR, Inc.* (Patent Owner), Amended Mandatory Notices by Patent Owner Under 37 CFR §42.8(a)(3), filed on Mar. 14, 2018, 3 pages.

(56) **References Cited**

OTHER PUBLICATIONS

United States Patent and Trademark Office, Before the Patent Trial and Appeal Board, Case No. PGR2018-00019 filed for U.S. Pat. No. 9,723,117 between *Merchsource, LLC* (Petitioner) v. *Dodocase, Inc.* (Patent Owner), Notice of Filing Date Accorded to Petition and Time for Filing Patent Owner Preliminary Response, Before Alexander C. Levy, Trial Paralegal, mailed on Jan. 22, 2018, 5 pages.
United States Patent and Trademark Office, Before the Patent Trial and Appeal Board, Case No. PGR2018-00019 filed for U.S. Pat. No. 9,723,117 between *Merchsource, LLC* (Petitioner) v. *DDC Technology, LLC.* (Patent Owner), Updated Mandatory Notices by Patent Owner Pursuant to 37 CFR § 42.8, filed on Nov. 20, 2018, 4 pages.
United States Patent and Trademark Office, Before the Patent Trial and Appeal Board, Case No. PGR2018-00019 filed for U.S. Pat. No. 9,723,117 between *Merchsource, LLC* (Petitioner) v. *DDC Technology, LLC.* (Patent Owner), Unopposed Motion for Pro Hac Vice Admission of Kyle B. Fleming Under 37 C.F.R. § 42.10, filed on Dec. 17, 2018, 9 pages.
United States Patent and Trademark Office, Before the Patent Trial and Appeal Board, Case No. PGR2018-00019 filed for U.S. Pat. No. 9,723,117 between *Merchsource, LLC* (Petitioner) v. *DDC Technology, LLC.* (Patent Owner), Power of Attorney of DDC Technology, LLC, filed on Nov. 20, 2018, 3 pages.
United States Patent and Trademark Office, Before the Patent Trial and Appeal Board, Case No. PGR2018-00019 filed for U.S. Pat. No. 9,723,117 between *Merchsource, LLC* (Petitioner) v. *DDC Technology, LLC.* (Patent Owner), Power of Attorney of DDC Technology, LLC, filed on Nov. 2, 2018, 3 pages.
United States Patent and Trademark Office, Before the Patent Trial and Appeal Board, Case No. PGR2018-00019 filed for U.S. Pat. No. 9,723,117 between *Merchsource, LLC* (Petitioner) v. *DDC Technology, LLC.* (Patent Owner), Petitioner's Reply, filed on Mar. 18, 2019, 30 pages.
United States Patent and Trademark Office, Before the Patent Trial and Appeal Board, Case No. PGR2018-00019 filed for U.S. Pat. No. 9,723,117 between *Merchsource, LLC* (Petitioner) v. *DDC Technology, LLC.* (Patent Owner), Petitioner's Opposition to Patent Owner's Motion to Amend, filed on Mar. 18, 2019, 24 pages.
United States Patent and Trademark Office, Before the Patent Trial and Appeal Board, Case No. PGR2018-00019 filed for U.S. Pat. No. 9,723,117 between *Merchsource, LLC* (Petitioner) v. *DDC Technology, LLC.* (Patent Owner), Patent Owner's Un-Opposed Motion for Pro Hac Vice Admission Pursuant to 37 C.F.R. 41.10(C), filed on Jan. 18, 2019, 5 pages.
United States Patent and Trademark Office, Before the Patent Trial and Appeal Board, Case No. PGR2018-00019 filed for U.S. Pat. No. 9,723,117 between *Merchsource, LLC* (Petitioner) v. *DDC Technology, LLC.* (Patent Owner), Patent Owner's Revised Exhibit List, filed on Nov. 9, 2018, 1 page.
United States Patent and Trademark Office, Before the Patent Trial and Appeal Board, Case No. PGR2018-00019 filed for U.S. Pat. No. 9,723,117 between *Merchsource, LLC* (Petitioner) v. *DDC Technology, LLC.* (Patent Owner), Patent Owner's Revised Exhibit List, filed on Jan. 18, 2019, 5 pages.
United States Patent and Trademark Office, Before the Patent Trial and Appeal Board, Case No. PGR2018-00019 filed for U.S. Pat. No. 9,723,117 between *Merchsource, LLC* (Petitioner) v. *DDC Technology, LLC.* (Patent Owner), Patent Owner's Response to Petition Pursuant to 37 C.F.R. 42.107(a), filed on Dec. 17, 2018, 57 pages.
United States Patent and Trademark Office, Before the Patent Trial and Appeal Board, Case No. PGR2018-00019 filed for U.S. Pat. No. 9,723,117 between *Merchsource, LLC* (Petitioner) v. *DDC Technology, LLC.* (Patent Owner), Patent Owner's Motion to Amend Pursuant to 37 C.F.R. § 42.121, filed on Dec. 17, 2018, 13 pages.
United States Patent and Trademark Office, Before the Patent Trial and Appeal Board, Case No. PGR2018-00019 filed for U.S. Pat. No. 9,723,117 between *Merchsource, LLC* (Petitioner) v. *DDC Technology, LLC.* (Patent Owner), Patent Owner's Motion to Amend Appendix-Claim Listing Pursuant to 37 C.F.R. § 42.121, filed on Dec. 17, 2018, 8 pages.
United States Patent and Trademark Office, Before the Patent Trial and Appeal Board, Case No. PGR2018-00019 filed for U.S. Pat. No. 9,723,117 between *Merchsource, LLC* (Petitioner) v. *DDC Technology, LLC.* (Patent Owner), Patent Owner's Motion for Withdrawal and Substitution of Counsel, filed on Nov. 9, 2018, 5 pages.
United States Patent and Trademark Office, Before the Patent Trial and Appeal Board, Case No. PGR2018-00019 filed for U.S. Pat. No. 9,723,117 between *Merchsource, LLC* (Petitioner) v. *DDC Technology, LLC.* (Patent Owner), Notice of Deposition of Kurtis Keller, filed on Nov. 19, 2018, 3 pages.
United States Patent and Trademark Office, Before the Patent Trial and Appeal Board, Case No. PGR2018-00019 filed for U.S. Pat. No. 9,723,117 between *Merchsource, LLC* (Petitioner) v. *DDC Technology, LLC.* (Patent Owner), Motion for Authorization to Conduct Discovery of Youtube LLC, filed on Jan. 14, 2019, 12 pages.
United States Patent and Trademark Office, Before the Patent Trial and Appeal Board, Case No. PGR2018-00019 filed for U.S. Pat. No. 9,723,117 between *Merchsource, LLC* (Petitioner) v. *DDC Technology, LLC.* (Patent Owner), Mandatory Notice by Patent Owner Under 37 CFR § 42.8, tiled on Nov. 2, 2018, 3 pages.
United States Patent and Trademark Office, Before the Patent Trial and Appeal Board, Case No. PGR2018-00019 filed for U.S. Pat. No. 9,723,117 between *Merchsource, LLC* (Petitioner) v. *DDC Technology, LLC.* (Patent Owner), Joint Stipulation Regarding Petitioner's Motion for Additional Discovery and Potential Deposition of Thirdparty Witness, filed on Jan. 24, 2019, 4 pages.
United States Patent and Trademark Office, Before the Patent Trial and Appeal Board, Case No. PGR2018-00019 filed for U.S. Pat. No. 9,723,117 between *Merchsource, LLC* (Petitioner) v. *DDC Technology, LLC.* (Patent Owner), Before Kalyan K. Deshpande, Patrick M. Boucher and Matthew J. McNeill, Administrative Patent Judges, Deshpande, Administrative Patent Judge, Order, Granting Petitioner's Motions for Admission Pro Hac Vice of Kyle B. Fleming 37 C.F.R. § 42.10, entered on Jan. 2, 2019, 4 pages.
United States Patent and Trademark Office, Before the Patent Trial and Appeal Board, Case No. PGR2018-00019 filed for U.S. Pat. No. 9,723,117 between *Merchsource, LLC* (Petitioner) v. *DDC Technology, LLC.* (Patent Owner), Before Kalyan K. Deshpande, Patrick M. Boucher and Matthew J. McNeill, Administrative Patent Judges, Deshpande, Administrative Patent Judge, Conduct of the Proceeding 37 C.F.R. § 42.5, entered on Nov. 20, 2018, 3 pages.
United States Patent and Trademark Office, Before the Patent Trial and Appeal Board, Case No. PGR2018-00019 filed for U.S. Pat. No. 9,723,117 between *Merchsource, LLC* (Petitioner) v. *DDC Technology, LLC.* (Patent Owner), Before Kalyan K. Deshpande, Patrick M. Boucher and Matthew J. McNeill, Administrative Patent Judges, Boucher, Administrative Patent Judge, Order, Additional Discovery 37 C.F.R. §§ 42.5, 42.51(b)(2), entered on Jan. 7, 2019, 3 pages.
United States Patent and Trademark Office, Before the Patent Trial and Appeal Board, Case No. PGR2018-00019 filed for U.S. Pat. No. 9,723,117 between *Merchsource, LLC* (Petitioner) v. *DDC Technology, LLC.* (Patent Owner), Before Kalyan K. Deshpande, Patrick M. Boucher and Matthew J. McNeill, Administrative Patent Judges, Boucher, Administrative Patent Judge, Decision, Motion for Pro Hac Vice Admission of Gabriel I. Opatken 37 C.F.R. § 42.10, entered on Jan. 25, 2019, 4 pages.
United States Patent and Trademark Office, Before the Patent Trial and Appeal Board, Case No. IPR2018-00494 filed for U.S. Pat. No. 9,420,075 between *Merchsource, LLC* (Petitioner) v. *Dodocase, Inc.* (Patent Owner), YouTube Video Prince Ramteke, Use Google Cardboard Without Magnetometer (Enabling Magnetic Ring Support to Every Device) "Youtube (May 10, 2015) Part 3 7:15-end", Exhibit# 1007, filed on Jan. 15, 2018, 1 pages.
United States Patent and Trademark Office, Before the Patent Trial and Appeal Board, Case No. IPR2018-00494 filed for U.S. Pat. No. 9,420,075 between *Merchsource, LLC* (Petitioner) v. *Dodocase, Inc.* (Patent Owner), YouTube Video Prince Ramteke, Use Google Cardboard Without Magnetometer (Enabling Magnetic Ring Support to Every Device) "Youtube (May 10, 2015) Part 2 3:32-7:15", Exhibit# 1007, filed on Jan. 15, 2018, 1 pages.

(56) **References Cited**

OTHER PUBLICATIONS

United States Patent and Trademark Office, Before the Patent Trial and Appeal Board, Case No. IPR2018-00494 filed for U.S. Pat. No. 9,420,075 between *Merchsource, LLC* (Petitioner) v. *Dodocase, Inc.* (Patent Owner), YouTube Video Prince Ramteke, Use Google Cardboard Without Magnetometer (Enabling Magnetic Ring Support to Every Device "Youtube (May 10, 2015) Part 1 0:00-3:32", Exhibit# 1007, filed on Jan. 15, 2018, 1 pages.
United States Patent and Trademark Office, Before the Patent Trial and Appeal Board, Case No. IPR2018-00494 filed for U.S. Pat. No. 9,420,075 between *Merchsource, LLC* (Petitioner) v. *Dodocase, Inc.* (Patent Owner), YouTube Video—GoogleDevelopers, Google I/O 2014—Cardboard: VR for Android "YouTube (Jun. 27, 2014), Exhibit# 1012, filed on Jan. 15, 2018, Part 9—37:47-41:13".
United States Patent and Trademark Office, Before the Patent Trial and Appeal Board, Case No. IPR2018-00494 filed for U.S. Pat. No. 9,420,075 between *Merchsource, LLC* (Petitioner) v. *Dodocase, Inc.* (Patent Owner), YouTube Video—GoogleDevelopers, Google I/O 2014—Cardboard: VR for Android "YouTube (Jun. 27, 2014), Exhibit# 1012, filed on Jan. 15, 2018, Part 8—32:57-37:47".
United States Patent and Trademark Office, Before the Patent Trial and Appeal Board, Case No. IPR2018-00494 filed for U.S. Pat. No. 9,420,075 between *Merchsource, LLC* (Petitioner) v. *Dodocase, Inc.* (Patent Owner), YouTube Video—GoogleDevelopers, Google I/O 2014—Cardboard: VR for Android "YouTube (Jun. 27, 2014), Exhibit# 1012, filed on Jan. 15, 2018, Part 7 28:07-32:57".
United States Patent and Trademark Office, Before the Patent Trial and Appeal Board, Case No. IPR2018-00494 filed for U.S. Pat. No. 9,420,075 between *Merchsource, LLC* (Petitioner) v. *Dodocase, Inc.* (Patent Owner), YouTube Video—GoogleDevelopers, Google I/O 2014—Cardboard: VR for Android "YouTube (Jun. 27, 2014), Exhibit# 1012, filed on Jan. 15, 2018, Part 6—22:59-28:07".
United States Patent and Trademark Office, Before the Patent Trial and Appeal Board, Case No. IPR2018-00494 filed for U.S. Pat. No. 9,420,075 between *Merchsource, LLC* (Petitioner) v. *Dodocase, Inc.* (Patent Owner), YouTube Video—GoogleDevelopers, Google I/O 2014—Cardboard: VR for Android "YouTube (Jun. 27, 2014), Exhibit# 1012, filed on Jan. 15, 2018, Part 5—18:22-22:59".
United States Patent and Trademark Office, Before the Patent Trial and Appeal Board, Case No. IPR2018-00494 filed for U.S. Pat. No. 9,420,075 between *Merchsource, LLC* (Petitioner) v. *Dodocase, Inc.* (Patent Owner), YouTube Video—GoogleDevelopers, Google I/O 2014—Cardboard: VR for Android "YouTube (Jun. 27, 2014), Exhibit# 1012, filed on Jan. 15, 2018, Part 4—13:32-18.22".
United States Patent and Trademark Office, Before the Patent Trial and Appeal Board, Case No. IPR2018-00494 filed for U.S. Pat. No. 9,420,075 between *Merchsource, LLC* (Petitioner) v. *Dodocase, Inc.* (Patent Owner), YouTube Video—GoogleDevelopers, Google I/O 2014—Cardboard: VR for Android "YouTube (Jun. 27, 2014), Exhibit# 1012, filed on Jan. 15, 2018, Part 3—9:10-13:32".
United States Patent and Trademark Office, Before the Patent Trial and Appeal Board, Case No. IPR2018-00494 filed for U.S. Pat. No. 9,420,075 between *Merchsource, LLC* (Petitioner) v. *Dodocase, Inc.* (Patent Owner), YouTube Video—GoogleDevelopers, Google I/O 2014—Cardboard: VR for Android "YouTube (Jun. 27, 2014), Exhibit# 1012, filed on Jan. 15, 2018, Part 2—4:24-9:10".
United States Patent and Trademark Office, Before the Patent Trial and Appeal Board, Case No. IPR2018-00494 filed for U.S. Pat. No. 9,420,075 between *Merchsource, LLC* (Petitioner) v. *Dodocase, Inc.* (Patent Owner), YouTube Video—GoogleDevelopers, Google I/O 2014—Cardboard: VR for Android "YouTube (Jun. 27, 2014), Exhibit# 1012, filed on Jan. 15, 2018, Part 10—41:13-end".
United States Patent and Trademark Office, Before the Patent Trial and Appeal Board, Case No. IPR2018-00494 filed for U.S. Pat. No. 9,420,075 between *Merchsource, LLC* (Petitioner) v. *Dodocase, Inc.* (Patent Owner), YouTube Video—GoogleDevelopers, Google I/O 2014—Cardboard: VR for Android "YouTube (Jun. 27, 2014), Exhibit# 1012, filed on Jan. 15, 2018, Part 1—0:00-4:24".
United States Patent and Trademark Office, Before the Patent Trial and Appeal Board, Case No. IPR2018-00494 filed for U.S. Pat. No. 9,420,075 between *Merchsource, LLC* (Petitioner) v. *Dodocase, Inc.* (Patent Owner), YouTube Objections to Subpoena and Declaration, Exhibit# 1029, filed on Mar. 18, 2019, 14 pages.
United States Patent and Trademark Office, Before the Patent Trial and Appeal Board, Case No. IPR2018-00494 filed for U.S. Pat. No. 9,420,075 between *Merchsource, LLC* (Petitioner) v. *Dodocase, Inc.* (Patent Owner), Webpage With VR Videos, Exhibit# 2044, filed on Dec. 17, 2018, 4 pages.
United States Patent and Trademark Office, Before the Patent Trial and Appeal Board, Case No. IPR2018-00494 filed for U.S. Pat. No. 9,420,075 between *Merchsource, LLC* (Petitioner) v. *Dodocase, Inc.* (Patent Owner), Declaration of Gabriel I. Opatken in Support of Patent Owners Motion for Pro Hac Vice Admission, Exhibit# 2014, filed on Jan. 18, 2019, 4 pages.
United States Patent and Trademark Office, Before the Patent Trial and Appeal Board, Case No. IPR2018-00494 filed for U.S. Pat. No. 9,420,075 between *Merchsource, LLC* (Petitioner) v. *Dodocase, Inc.* (Patent Owner), Declaration of Chris Cassin, Exhibit# 2016, filed on Dec. 17, 2018, 3 pages.
United States Patent and Trademark Office, Before the Patent Trial and Appeal Board, Case No. IPR2018-00494 filed for U.S. Pat. No. 9,420,075 between *Merchsource, LLC* (Petitioner) v. *Dodocase, Inc.* (Patent Owner), Declaration of Aakash Parekh, Exhibit# 2052, filed on Dec. 17, 2018, 6 pages.
United States Patent and Trademark Office, Before the Patent Trial and Appeal Board, Case No. IPR2018-00494 filed for U.S. Pat. No. 9,420,075 between *Merchsource, LLC* (Petitioner) v. *Dodocase, Inc.* (Patent Owner), CV of Kyle B. Fleming, Exhibit# 1025, filed on Dec. 17, 2018, 8 pages.
United States Patent and Trademark Office, Before the Patent Trial and Appeal Board, Case No. IPR2018-00494 filed for U.S. Pat. No. 9,420,075 between *Merchsource, LLC* (Petitioner) v. *Dodocase, Inc.* (Patent Owner), CV Kurtis Keller, Exhibit# 1003, filed on Jan. 15, 2018, 5 pages.
United States Patent and Trademark Office, Before the Patent Trial and Appeal Board, Case No. IPR2018-00494 filed for U.S. Pat. No. 9,420,075 between *Merchsource, LLC* (Petitioner) v. *Dodocase, Inc.* (Patent Owner), Contract Regan Arts, Exhibit# 2028, filed on Dec. 17, 2018, 12 pages.
United States Patent and Trademark Office, Before the Patent Trial and Appeal Board, Case No. IPR2018-00494 filed for U.S. Pat. No. 9,420,075 between *Merchsource, LLC* (Petitioner) v. *Dodocase, Inc.* (Patent Owner), Cardboard Button, Exhibit# 2046, filed on Dec. 17, 2018, 2 pages.
United States Patent and Trademark Office, Before the Patent Trial and Appeal Board, Case No. IPR2018-00494 filed for U.S. Pat. No. 9,420,075 between *Merchsource, LLC* (Petitioner) v. *Dodocase, Inc.* (Patent Owner), Assignment to DDC Technology, LLC, Exhibit# 2013, filed on Nov. 9, 2018, 3 pages.
United States Patent and Trademark Office, Before the Patent Trial and Appeal Board, Case No. IPR2018-00494 filed for U.S. Pat. No. 9,420,075 between *Merchsource, LLC* (Petitioner) v. *Dodocase, Inc.* (Patent Owner), Assembly Instruction Video, Part 8, Exhibit# 2038, filed on Dec. 17, 2018, 1 pages.
United States Patent and Trademark Office, Before the Patent Trial and Appeal Board, Case No. IPR2018-00494 filed for U.S. Pat. No. 9,420,075 between *Merchsource, LLC* (Petitioner) v. *Dodocase, Inc.* (Patent Owner), Assembly Instruction Video, Part 7, Exhibit# 2038, filed on Dec. 17, 2018, 1 pages.
United States Patent and Trademark Office, Before the Patent Trial and Appeal Board, Case No. IPR2018-00494 filed for U.S. Pat. No. 9,420,075 between *Merchsource, LLC* (Petitioner) v. *Dodocase, Inc.* (Patent Owner), Assembly Instruction Video, Part 6, Exhibit# 2038, filed on Dec. 17, 2018, 1 pages.
United States Patent and Trademark Office, Before the Patent Trial and Appeal Board, Case No. IPR2018-00494 filed for U.S. Pat. No. 9,420,075 between *Merchsource, LLC* (Petitioner) v. *Dodocase, Inc.* (Patent Owner), Assembly Instruction Video, Part 5, Exhibit# 2038, filed on Dec. 17, 2018, 1 pages.

(56) **References Cited**

OTHER PUBLICATIONS

United States Patent and Trademark Office, Before the Patent Trial and Appeal Board, Case No. IPR2018-00494 filed for U.S. Pat. No. 9,420,075 between *Merchsource, LLC* (Petitioner) v. *Dodocase, Inc.* (Patent Owner), Assembly Instruction Video, Part 4, Exhibit# 2038, filed on Dec. 17, 2018, 1 pages.
United States Patent and Trademark Office, Before the Patent Trial and Appeal Board, Case No. IPR2018-00494 filed for U.S. Pat. No. 9,420,075 between *Merchsource, LLC* (Petitioner) v. *Dodocase, Inc.* (Patent Owner), Assembly Instruction Video, Part 3, Exhibit# 2038, filed on Dec. 17, 2018, 1 pages.
United States Patent and Trademark Office, Before the Patent Trial and Appeal Board, Case No. IPR2018-00494 filed for U.S. Pat. No. 9,420,075 between *Merchsource, LLC* (Petitioner) v. *Dodocase, Inc.* (Patent Owner), Assembly Instruction Video, Part 2, Exhibit# 2038, filed on Dec. 17, 2018, 1 pages.
United States Patent and Trademark Office, Before the Patent Trial and Appeal Board, Case No. IPR2018-00494 filed for U.S. Pat. No. 9,420,075 between *Merchsource, LLC* (Petitioner) v. *Dodocase, Inc.* (Patent Owner), Assembly Instruction Video, Part 11, Exhibit# 2038, filed on Dec. 17, 2018, 1 pages.
United States Patent and Trademark Office, Before the Patent Trial and Appeal Board, Case No. IPR2018-00494 filed for U.S. Pat. No. 9,420,075 between *Merchsource, LLC* (Petitioner) v. *Dodocase, Inc.* (Patent Owner), Assembly Instruction Video, Part 10, Exhibit# 2038, filed on Dec. 17, 2018, 1 pages.
United States Patent and Trademark Office, Before the Patent Trial and Appeal Board, Case No. IPR2018-00494 filed for U.S. Pat. No. 9,420,075 between *Merchsource, LLC* (Petitioner) v. *Dodocase, Inc.* (Patent Owner), Amended Mandatory Notices by Patent Owner Under CFR § 42.8(a)(3), filed on Oct. 10, 2018, 3 pages.
United States Patent and Trademark Office, Before the Patent Trial and Appeal Board, Case No. IPR2018-00494 filed for U.S. Pat. No. 9,420,075 between *Merchsource, LLC* (Petitioner) v. *Dodocase, Inc.* (Patent Owner), Amended Mandatory Notices by Patent Owner Under 37 CFR §42.8(a)(3), filed on Mar. 14, 2018, 3 pages.
United States Patent and Trademark Office, Before the Patent Trial and Appeal Board, Case No. IPR2018-00494 filed for U.S. Pat. No. 9,420,075 between *Merchsource, LLC* (Petitioner) v. *Dodocase, Inc.* (Patent Owner), Amazon, Part 2, Exhibit# 2021, filed on Dec. 17, 2018, 5 pages.
United States Patent and Trademark Office, Before the Patent Trial and Appeal Board, Case No. IPR2018-00494 filed for U.S. Pat. No. 9,420,075 between *Merchsource, LLC* (Petitioner) v. *Dodocase, Inc.* (Patent Owner), Amazon, Part 1, Exhibit# 2021, filed on Dec. 17, 2018, 10 pages.
United States Patent and Trademark Office, Before the Patent Trial and Appeal Board, Case No. IPR2018-00494 filed for U.S. Pat. No. 9,420,075 between *Merchsource, LLC* (Petitioner) v. *Dodocase, VR, Inc.* (Patent Owner), Power of Attorney for Dodocase VR, Inc, filed on Feb. 14, 2018, 2 pages.
United States Patent and Trademark Office, Before the Patent Trial and Appeal Board, Case No. IPR2018-00494 filed for U.S. Pat. No. 9,420,075 between *Merchsource, LLC* (Petitioner) v. *Dodocase, VR, Inc.* (Patent Owner), Power of Attorney for Dodocase VR, Inc, filed on Feb. 4, 2018, 2 pages.
United States Patent and Trademark Office, Before the Patent Trial and Appeal Board, Case No. IPR2018-00494 filed for U.S. Pat. No. 9,420,075 between *Merchsource, LLC* (Petitioner) v. *Dodocase, VR, Inc.* (Patent Owner), Before Kalyan K. Deshpande, Patrick M. Boucher, and Matthew J. McNeill, Administrative Patent Judges, Deshpande, Administrative Patent Judge, Scheduling Order, entered on Aug. 22, 2018, 9 pages.
United States Patent and Trademark Office, Before the Patent Trial and Appeal Board, Case No. IPR2018-00494 filed for U.S. Pat. No. 9,420,075 between *Merchsource, LLC* (Petitioner) v. *Dodocase, VR, Inc.* (Patent Owner), Before Kalyan K. Deshpande, Patrick M. Boucher, and Matthew J. McNeill, Administrative Patent Judges, Deshpande, Administrative Patent Judge, Order, Granting Patent Owner's Motion for Withdrawal and Substitution of Counsel 37 C.F.R. § 42.10, entered on Oct. 11, 2018, 4 pages.
United States Patent and Trademark Office, Before the Patent Trial and Appeal Board, Case No. IPR2018-00494 filed for U.S. Pat. No. 9,420,075 between *Merchsource, LLC* (Petitioner) v. *Dodocase, VR, Inc.* (Patent Owner), Before Kalyan K. Deshpande, Patrick M. Boucher, and Matthew J. McNeill, Administrative Patent Judges, Deshpande, Administrative Patent Judge, Conduct of the Proceeding 37 C.F.R. § 42.5, entered on Sep. 21, 2018, 4 pages.
United States Patent and Trademark Office, Before the Patent Trial and Appeal Board, Case No. IPR2018-00494 filed for U.S. Pat. No. 9,420,075 between *Merchsource, LLC* (Petitioner) v. *Dodocase, VR, Inc.* (Patent Owner), Before Kalyan K. Deshpande, Patrick M. Boucher, and Matthew J. McNeill, Administrative Patent Judges, Boucher, Administrative Patent Judge, Order, Granting Patent Owner's Motion for Withdrawal and Substitution of Counsel; Modification of Schedule 37 C.F.R. §§ 42.5, 42.10, entered on Nov. 13, 2018, 7 pages.
United States Patent and Trademark Office, Before the Patent Trial and Appeal Board, Case No. IPR2018-00494 filed for U.S. Pat. No. 9,420,075 between *Merchsource, LLC* (Petitioner) v. *Dodocase, VR, Inc.* (Patent Owner), Before Kalyan K. Deshpande, Patrick M. Boucher, and Matthew J. McNeill, Administrative Patent Judges, Boucher, Administrative Patent Judge, Order, Additional Discovery 37 C.F.R. §§ 42.5, 42.51(b)(2), entered on Jan. 29, 2019, 6 pages.
United States Patent and Trademark Office, Before the Patent Trial and Appeal Board, Case No. IPR2018-00494 filed for U.S. Pat. No. 9,420,075 between *Merchsource, LLC* (Petitioner) v. *Dodocase, VR, Inc.* (Patent Owner), Before Kalyan K. Deshpande and Matthew J. McNeill, Administrative Patent Judges, McNeill, Administrative Patent Judge, Order, Conduct of Proceeding 37 C.F.R. § 42.5, Entered on May 1, 2018, 4 pages.
United States Patent and Trademark Office, Before the Patent Trial and Appeal Board, Case No. IPR2018-00494 filed for U.S. Pat. No. 9,420,075 between *Merchsource, LLC* (Petitioner) v. *Dodocase, VR, Inc.* (Patent Owner), Before Kalyan K. Deshpande and Matthew J. McNeill, Administrative Patent Judges, McNeill, Administrative Patent Judge, Order, Conduct of Proceeding 37 C.F.R. § 42.5, Entered on Apr. 13, 2018, 4 pages.
United States Patent and Trademark Office, Before the Patent Trial and Appeal Board, Case No. IPR2018-00494 filed for U.S. Pat. No. 9,420,075 between *Merchsource, LLC* (Petitioner) v. *Dodocase, VR, Inc.* (Patent Owner), Before Kalyan K. Deshpande and Matthew J. McNeill, Administrative Patent Judges, McNeill, Administrative Patent Judge, Decision, Institution of Inter Partes Review 35 U.S.C. § 314(a), filed on Aug. 22, 2018, 22 pages.
United States Patent and Trademark Office, Before the Patent Trial and Appeal Board, Case No. IPR2018-00494 filed for U.S. Pat. No. 9,420,075 between *Merchsource, LLC* (Petitioner) v. *Dodocase, VR, Inc.* (Patent Owner), Updated Mandatory Notices by Patent Owner Pursuant to 37 CFR § 42.8, filed on Nov. 20, 2018 , 3 pages.
United States Patent and Trademark Office, Before the Patent Trial and Appeal Board, Case No. IPR2018-00494 filed for U.S. Pat. No. 9,420,075 between *Merchsource, LLC* (Petitioner) v. *Dodocase, VR, Inc.* (Patent Owner), Unopposed Motion for Pro Hac Vice Admission of Kyle B. Fleming Under 37 C.F.R. § 42.10, filed on Dec. 17, 2018, 9 pages.
United States Patent and Trademark Office, Before the Patent Trial and Appeal Board, Case No. IPR2018-00494 filed for U.S. Pat. No. 9,420,075 between *Merchsource, LLC* (Petitioner) v. *DDC Technology, LLC.* (Patent Owner), Power of Attorney of DDC Technology, LLC, filed on Nov. 20, 2018 , 3 pages.
United States Patent and Trademark Office, Before the Patent Trial and Appeal Board, Case No. IPR2018-00494 filed for U.S. Pat. No. 9,420,075 between *Merchsource, LLC* (Petitioner) v. *DDC Technology, LLC.* (Patent Owner), Petitioner's Reply, filed on Mar. 18, 2019, 35 pages.
United States Patent and Trademark Office, Before the Patent Trial and Appeal Board, Case No. IPR2018-00494 filed for U.S. Pat. No. 9,420,075 between *Merchsource, LLC* (Petitioner) v. *DDC Technology, LLC.* (Patent Owner), Patent Owners Response to Petition Pursuant to 37 C.F.R. 42.107(a), filed on Dec. 17, 2018, 63 pages.
United States Patent and Trademark Office, Before the Patent Trial and Appeal Board, Case No. IPR2018-00494 filed for U.S. Pat. No. 9,420,075 between *Merchsource, LLC* (Petitioner) v. *DDC Technology, LLC.* (Patent Owner), Patent Owner's Un-Opposed Motion for Pro Hac Vice Admission Pursuant to 37 C.F.R. 41.10(C), filed on Jan. 18, 2019, 5 pages.

(56) **References Cited**

OTHER PUBLICATIONS

United States Patent and Trademark Office, Before the Patent Trial and Appeal Board, Case No. IPR2018-00494 filed for U.S. Pat. No. 9,420,075 between *Merchsource, LLC* (Petitioner) v. *DDC Technology, LLC*. (Patent Owner), Patent Owner's Revised Exhibit List, filed on Nov. 9, 2018 , 1 page.
United States Patent and Trademark Office, Before the Patent Trial and Appeal Board, Case No. IPR2018-00494 filed for U.S. Pat. No. 9,420,075 between *Merchsource, LLC* (Petitioner) v. *DDC Technology, LLC*. (Patent Owner), Patent Owner's Revised Exhibit List, filed on Jan. 18, 2019, 5 pages.
United States Patent and Trademark Office, Before the Patent Trial and Appeal Board, Case No. IPR2018-00494 filed for U.S. Pat. No. 9,420,075 between *Merchsource, LLC* (Petitioner) v. *DDC Technology, LLC*. (Patent Owner), Patent Owner's Motion to Amend Pursuant to 37 C.F.R. § 42.121, filed on Dec. 17, 2018, 12 pages.
United States Patent and Trademark Office, Before the Patent Trial and Appeal Board, Case No. IPR2018-00494 filed for U.S. Pat. No. 9,420,075 between *Merchsource, LLC* (Petitioner) v. *DDC Technology, LLC*. (Patent Owner), Patent Owner's Motion to Amend Appendix-Claim Listing Pursuant to 37 C.F.R. § 42.121, filed on Dec. 17, 2018, 6 pages.
United States Patent and Trademark Office, Before the Patent Trial and Appeal Board, Case No. IPR2018-00494 filed for U.S. Pat. No. 9,420,075 between *Merchsource, LLC* (Petitioner) v. *DDC Technology, LLC*. (Patent Owner), Patent Owner's Motion for Withdrawal and Substitution of Counsel, filed on Nov. 9, 2018 , 5 pages.
United States Patent and Trademark Office, Before the Patent Trial and Appeal Board, Case No. IPR2018-00494 filed for U.S. Pat. No. 9,420,075 between *Merchsource, LLC* (Petitioner) v. *DDC Technology, LLC*. (Patent Owner), Notice of Deposition of Kurtis Keller, filed on Nov. 19, 2018 , 3 pages.
United States Patent and Trademark Office, Before the Patent Trial and Appeal Board, Case No. IPR2018-00494 filed for U.S. Pat. No. 9,420,075 between *Merchsource, LLC* (Petitioner) v. *DDC Technology, LLC*. (Patent Owner), Motion for Authorization to Conduct Discovery of Youtube LLC, filed on Jan. 14, 2019, 12 pages.
United States Patent and Trademark Office, Before the Patent Trial and Appeal Board, Case No. IPR2018-00494 filed for U.S. Pat. No. 9,420,075 between *Merchsource, LLC* (Petitioner) v. *DDC Technology, LLC*. (Patent Owner), Joint Stipulation Regarding Petitioner's Motion for Additional Discovery and Potential Deposition of Thirdparty Witness, filed on Jan. 24, 2019, 4 pages.
United States Patent and Trademark Office, Before the Patent Trial and Appeal Board, Case No. IPR2018-00494 filed for U.S. Pat. No. 9,420,075 between *Merchsource, LLC* (Petitioner) v. *DDC Technology, LLC*. (Patent Owner), Before Kalyan K. Deshpande, Patrick M. Boucher, and Matthew J. McNeill, Administrative Patent Judges, Deshpande, Administrative Patent Judge, Order, Granting Petitioner's Motions for Admission Pro Hac Vice of Kyle B. Fleming 37 C.F.R. § 42.10, entered on Jan. 2, 2019, 4 pages.
United States Patent and Trademark Office, Before the Patent Trial and Appeal Board, Case No. IPR2018-00494 filed for U.S. Pat. No. 9,420,075 between *Merchsource, LLC* (Petitioner) v. *DDC Technology, LLC*. (Patent Owner), Before Kalyan K. Deshpande, Patrick M. Boucher, and Matthew J. McNeill, Administrative Patent Judges, Deshpande, Administrative Patent Judge, Conduct of the Proceeding 37 C.F.R. § 42.5, entered on Nov. 20, 2018, 3 pages.
United States Patent and Trademark Office, Before the Patent Trial and Appeal Board, Case No. IPR2018-00494 filed for U.S. Pat. No. 9,420,075 between *Merchsource, LLC* (Petitioner) v. *DDC Technology, LLC*. (Patent Owner), Before Kalyan K. Deshpande, Patrick M. Boucher, and Matthew J. McNeill, Administrative Patent Judges, Boucher, Administrative Patent Judge, Decision, Motion for Pro Hac Vice Admission of Gabriel I. Opatken 37 C.F.R. § 42.10, entered on Jan. 25, 2019, 4 pages.
United States Patent and Trademark Office, Before the Patent Trial and Appeal Board, Case No. IPR2018-00494 filed for U.S. Pat. No. 9,420,075 between *Merchsource, LLC* (Petitioner) v. *DDC Technology, LLC*. (Patent Owner), Before Kalyan K. Deshpande and Patrick M. Boucher Administrative Patent Judges, Boucher, Administrative Patent Judge, Order, Additional Discovery 37 C.F.R. §§ 42.5, 42.51(b)(2), entered on Jan. 7, 2019, 3 pages.
United States Court of Appeals for the Federal Circuit, *Dodocase VR, Inc., fka Dodocase, Inc*., Plaintiff-Appellee v. *Merchsource, LLC, dba Sharper Image*, Defendant-Appellant and *Threesixty Brands Group, LLC, dba Sharper Image*, Defendant, Case: 2018-1724, Appeal from the United States District Court for the Northern District of California in No. 3:17-cv-07088-EDL, Magistrate Judge Elizabeth D. Laporte, on Motion, Before Dyk, Moore, and Reyna, Circuit Judges. Dyk, Circuit Judge, Order, 2 pages.
United States Patent and Trademark Office, Before the Patent Trial and Appeal Board, Case No: PGR2018-00020 filed for U.S. Pat. No. 9,811,184 between *Merchsource, LLC* (Petitioner) v. *DDC Technology, LLC*. (Patent Owner), U.S. Pat. No. 9,723,117 File History, Exhibit# 1022, filed on Jan. 15, 2018, 205 pages.
United States Patent and Trademark Office, Before the Patent Trial and Appeal Board, Case No. PGR2018-00020 filed for U.S. Pat. No. 9,811,184 between *Merchsource, LLC* (Petitioner) v. *DDC Technology, LLC*. (Patent Owner), U.S. Pat. No. 9,420,075 File History, Exhibit# 1011, filed on Jan. 15, 2018, 248 pages.
United States Patent and Trademark Office, Before the Patent Trial and Appeal Board, Case No. PGR2018-00020 filed for U.S. Pat. No. 9,811,184 between *Merchsource, LLC* (Petitioner) v. *DDC Technology, LLC*. (Patent Owner), U.S. Pat. No. 5,877,459—Prater, Exhibit# 1014, filed on Jan. 15, 2018, 7 pages.
United States Patent and Trademark Office, Before the Patent Trial and Appeal Board, Case No. PGR2018-00020 filed for U.S. Pat. No. 9,811,184 between *Merchsource, LLC* (Petitioner) v. *DDC Technology, LLC*. (Patent Owner), Updated Mandatory Notices by Patent Owner Pursuant to 37 CFR § 42.8, filed on Nov. 20, 2018 , 4 pages.
United States Patent and Trademark Office, Before the Patent Trial and Appeal Board, Case No. PGR2018-00020 filed for U.S. Pat. No. 9,811,184 between *Merchsource, LLC* (Petitioner) v. *DDC Technology, LLC*. (Patent Owner), Unsigned Contract Between Dodocase and Regan Arts, Exhibit# 2028, filed on Dec. 17, 2018, 12 pages.
United States Patent and Trademark Office, Before the Patent Trial and Appeal Board, Case No. PGR2018-00020 filed for U.S. Pat. No. 9,811,184 between *Merchsource, LLC* (Petitioner) v. *DDC Technology, LLC*. (Patent Owner), Unopposed Motion for Pro Hac Vice Admission of Kyle B. Fleming Under 37 C.F.R. § 42.10, filed on Dec. 17, 2018 , 9 pages.
United States Patent and Trademark Office, Before the Patent Trial and Appeal Board, Case No. PGR2018-00020 filed for U.S. Pat. No. 9,811,184 between *Merchsource, LLC* (Petitioner) v. *DDC Technology, LLC*. (Patent Owner), U.S. Publication No. 2014/0247246—Maus, Exhibit# 1032, filed on Mar. 18, 2019, 51 pages.
United States Patent and Trademark Office, Before the Patent Trial and Appeal Board, Case No. PGR2018-00020 filed for U.S. Pat. No. 9,811,184 between *Merchsource, LLC* (Petitioner) v. *DDC Technology, LLC*. (Patent Owner), Transcript of Jan. 4 Teleconference, Exhibit# 1028, filed on Jan. 20, 2019, 32 pages.
United States Patent and Trademark Office, Before the Patent Trial and Appeal Board, Case No. PGR2018-00020 filed for U.S. Pat. No. 9,811,184 between *Merchsource, LLC* (Petitioner) v. *DDC Technology, LLC*. (Patent Owner), Transcript of Sep. 20, 2018 Phone Conference, Exhibit# 1025, filed on Oct. 8, 2018, 27 pages.
United States Patent and Trademark Office, Before the Patent Trial and Appeal Board, Case No. PGR2018-00020 filed for U.S. Pat. No. 9,811,184 between *Merchsource, LLC* (Petitioner) v. *DDC Technology, LLC*. (Patent Owner), Transcript—Deposition of K. Keller, Exhibit# 2051, filed on Dec. 17, 2018, 182 pages.
United States Patent and Trademark Office, Before the Patent Trial and Appeal Board, Case No. PGR2018-00020 filed for U.S. Pat. No. 9,811,184 between *Merchsource, LLC* (Petitioner) v. *DDC Technology, LLC*. (Patent Owner), SVVR Meetup, Part 8, Exhibit# 2039, filed on Dec. 18, 2018, 1 pages.
United States Patent and Trademark Office, Before the Patent Trial and Appeal Board, Case No. PGR2018-00020 filed for U.S. Pat. No. 9,811,184 between *Merchsource, LLC* (Petitioner) v. *DDC Technology, LLC*. (Patent Owner), SVVR Meetup, Part 7, Exhibit# 2039, filed on Dec. 18, 2018, 1 pages.

(56) **References Cited**

OTHER PUBLICATIONS

United States Patent and Trademark Office, Before the Patent Trial and Appeal Board, Case No. PGR2018-00020 filed for U.S. Pat. No. 9,811,184 between *Merchsource, LLC* (Petitioner) v. *DDC Technology, LLC.* (Patent Owner), SVVR Meetup, Part 6, Exhibit# 2039, filed on Dec. 18, 2018, 1 pages.
United States Patent and Trademark Office, Before the Patent Trial and Appeal Board, Case No. PGR2018-00020 filed for U.S. Pat. No. 9,811,184 between *Merchsource, LLC* (Petitioner) v. *DDC Technology, LLC.* (Patent Owner), SVVR Meetup, Part 5, Exhibit# 2039, filed on Dec. 18, 2018, 1 pages.
United States Patent and Trademark Office, Before the Patent Trial and Appeal Board, Case No. PGR2018-00020 filed for U.S. Pat. No. 9,811,184 between *Merchsource, LLC* (Petitioner) v. *DDC Technology, LLC.* (Patent Owner), SVVR Meetup, Part 4, Exhibit# 2039, filed on Dec. 18, 2018, 1 pages.
United States Patent and Trademark Office, Before the Patent Trial and Appeal Board, Case No. PGR2018-00020 filed for U.S. Pat. No. 9,811,184 between *Merchsource, LLC* (Petitioner) v. *DDC Technology, LLC.* (Patent Owner), SVVR Meetup, Part 3, Exhibit# 2039, filed on Dec. 18, 2018, 1 pages.
United States Patent and Trademark Office, Before the Patent Trial and Appeal Board, Case No. PGR2018-00020 filed for U.S. Pat. No. 9,811,184 between *Merchsource, LLC* (Petitioner) v. *DDC Technology, LLC.* (Patent Owner), SVVR Meetup, Part 2, Exhibit# 2039, filed on Dec. 18, 2018, 1 pages.
United States Patent and Trademark Office, Before the Patent Trial and Appeal Board, Case No. PGR2018-00020 filed for U.S. Pat. No. 9,811,184 between *Merchsource, LLC* (Petitioner) v. *DDC Technology, LLC.* (Patent Owner), SVVR Meetup, Part 1, Exhibit# 2039, filed on Dec. 18, 2018, 1 pages.
United States Patent and Trademark Office, Before the Patent Trial and Appeal Board, Case No. PGR2018-00020 filed for U.S. Pat. No. 9,811,184 between *Merchsource, LLC* (Petitioner) v. *DDC Technology, LLC.* (Patent Owner), Supplemental Evidence and Declaration of Christopher Butler, Exhibit# 1030, filed on Mar. 18, 2019, 20 pages.
United States Patent and Trademark Office, Before the Patent Trial and Appeal Board, Case No. PGR2018-00020 filed for U.S. Pat. No. 9,811,184 between *Merchsource, LLC* (Petitioner) v. *DDC Technology, LLC.* (Patent Owner), Signe Brewster, Why Google Cardboard is Actually a Huge Boost for Virtual Reality "Gigaom (Jun. 28 2014)", Exhibit# 1007, filed on Jan. 15, 2018, 11 pages.
United States Patent and Trademark Office, Before the Patent Trial and Appeal Board, Case No. PGR2018-00020 filed for U.S. Pat. No. 9,811,184 between *Merchsource, LLC* (Petitioner) v. *DDC Technology, LLC.* (Patent Owner), Shipping Label, Exhibit# 2024, filed on Dec. 17, 2018, 2 pages.
United States Patent and Trademark Office, Before the Patent Trial and Appeal Board, Case No. PGR2018-00020 filed for U.S. Pat. No. 9,811,184 between *Merchsource, LLC* (Petitioner) v. *DDC Technology, LLC.* (Patent Owner), SFHTML5 Meetup, Part 8, Exhibit# 2040, filed on Dec. 18, 2018, 1 pages.
United States Patent and Trademark Office, Before the Patent Trial and Appeal Board, Case No. PGR2018-00020 filed for U.S. Pat. No. 9,811,184 between *Merchsource, LLC* (Petitioner) v. *DDC Technology, LLC.* (Patent Owner), SFHTML5 Meetup, Part 7, Exhibit# 2040, filed on Dec. 18, 2018, 1 pages.
United States Patent and Trademark Office, Before the Patent Trial and Appeal Board, Case No. PGR2018-00020 filed for U.S. Pat. No. 9,811,184 between *Merchsource, LLC* (Petitioner) v. *DDC Technology, LLC.* (Patent Owner), SFHTML5 Meetup, Part 6, Exhibit# 2040, filed on Dec. 18, 2018, 1 pages.
United States Patent and Trademark Office, Before the Patent Trial and Appeal Board, Case No. PGR2018-00020 filed for U.S. Pat. No. 9,811,184 between *Merchsource, LLC* (Petitioner) v. *DDC Technology, LLC.* (Patent Owner), SFHTML5 Meetup, Part 5, Exhibit# 2040, filed on Dec. 18, 2018, 1 pages.
United States Patent and Trademark Office, Before the Patent Trial and Appeal Board, Case No. PGR2018-00020 filed for U.S. Pat. No. 9,811,184 between *Merchsource, LLC* (Petitioner) v. *DDC Technology, LLC.* (Patent Owner), SFHTML5 Meetup, Part 4, Exhibit# 2040, filed on Dec. 18, 2018, 1 pages.
United States Patent and Trademark Office, Before the Patent Trial and Appeal Board, Case No. PGR2018-00020 filed for U.S. Pat. No. 9,811,184 between *Merchsource, LLC* (Petitioner) v. *DDC Technology, LLC.* (Patent Owner), SFHTML5 Meetup, Part 3, Exhibit# 2040, filed on Dec. 18, 2018, 1 pages.
United States Patent and Trademark Office, Before the Patent Trial and Appeal Board, Case No. PGR2018-00020 filed for U.S. Pat. No. 9,811,184 between *Merchsource, LLC* (Petitioner) v. *DDC Technology, LLC.* (Patent Owner), SFHTML5 Meetup, Part 2, Exhibit# 2040, filed on Dec. 18, 2018, 1 pages.
United States Patent and Trademark Office, Before the Patent Trial and Appeal Board, Case No. PGR2018-00020 filed for U.S. Pat. No. 9,811,184 between *Merchsource, LLC* (Petitioner) v. *DDC Technology, LLC.* (Patent Owner), SFHTML5 Meetup, Part 1, Exhibit# 2040, filed on Dec. 18, 2018, 1 pages.
United States Patent and Trademark Office, Before the Patent Trial and Appeal Board, Case No. PGR2018-00020 filed for U.S. Pat. No. 9,811,184 between *Merchsource, LLC* (Petitioner) v. *DDC Technology, LLC.* (Patent Owner), Senate Record—AIA, Exhibit# 2036, filed on Dec. 17, 2018, 3 pages.
United States Patent and Trademark Office, Before the Patent Trial and Appeal Board, Case No. PGR2018-00020 filed for U.S. Pat. No. 9,811,184 between *Merchsource, LLC* (Petitioner) v. *DDC Technology, LLC.* (Patent Owner), Second Declaration of Patrick Buckley, Exhibit# 2043, filed on Dec. 17, 2018, 21 pages.
United States Patent and Trademark Office, Before the Patent Trial and Appeal Board, Case No. PGR2018-00020 filed for U.S. Pat. No. 9,811,184 between *Merchsource, LLC* (Petitioner) v. *DDC Technology, LLC.* (Patent Owner), Road to VR Part 2, Exhibit# 2020, filed on Dec. 17, 2018, 6 pages.
United States Patent and Trademark Office, Before the Patent Trial and Appeal Board, Case No. PGR2018-00020 filed for U.S. Pat. No. 9,811,184 between *Merchsource, LLC* (Petitioner) v. *DDC Technology, LLC.* (Patent Owner), Road to VR Part 1, Exhibit# 2020, filed on Dec. 17, 2018, 4 pages.
United States Patent and Trademark Office, Before the Patent Trial and Appeal Board, Case No. PGR2018-00020 filed for U.S. Pat. No. 9,811,184 between *Merchsource, LLC* (Petitioner) v. *DDC Technology, LLC.* (Patent Owner), Power of Attorney of DDC Technology, LLC, filed on Nov. 20, 2018 , 3 pages.
United States Patent and Trademark Office, Before the Patent Trial and Appeal Board, Case No. PGR2018-00020 filed for U.S. Pat. No. 9,811,184 between *Merchsource, LLC* (Petitioner) v. *DDC Technology, LLC.* (Patent Owner), Photos of NYCC, Exhibit# 2031, filed on Dec. 17, 2018, 4 pages.
United States Patent and Trademark Office, Before the Patent Trial and Appeal Board, Case No. PGR2018-00020 filed for U.S. Pat. No. 9,811,184 between *Merchsource, LLC* (Petitioner) v. *DDC Technology, LLC.* (Patent Owner), Photos of Engadget, Exhibit# 2032, filed on Dec. 17, 2018, 4 pages.
United States Patent and Trademark Office, Before the Patent Trial and Appeal Board, Case No. PGR2018-00020 filed for U.S. Pat. No. 9,811,184 between *Merchsource, LLC* (Petitioner) v. *DDC Technology, LLC.* (Patent Owner), Petitioner's Reply, filed on Mar. 18, 2019, 30 pages.
United States Patent and Trademark Office, Before the Patent Trial and Appeal Board, Case No. PGR2018-00020 filed for U.S. Pat. No. 9,811,184 between *Merchsource, LLC* (Petitioner) v. *DDC Technology, LLC.* (Patent Owner), Petitioner's Opposition to Patent Owner's Motion to Amend, filed on Mar. 18, 2019, 25 pages.
United States Patent and Trademark Office, Before the Patent Trial and Appeal Board, Case No. PGR2018-00020 filed for U.S. Pat. No. 9,811,184 between *Merchsource, LLC* (Petitioner) v. *DDC Technology, LLC.* (Patent Owner), Patent Owners Response to Petition Pursuant to 37 C.F.R. 42.107(a), filed on Dec. 17, 2018, 57 pages.

(56) **References Cited**

OTHER PUBLICATIONS

United States Patent and Trademark Office, Before the Patent Trial and Appeal Board, Case No. PGR2018-00020 filed for U.S. Pat. No. 9,811,184 between *Merchsource, LLC* (Petitioner) v. *DDC Technology, LLC*. (Patent Owner), Patent Owner's Un-Opposed Motion for Pro Hac Vice Admission Pursuant to 37 C.F.R. 41.10(C), filed on Jan. 18, 2019, 5 pages.
United States Patent and Trademark Office, Before the Patent Trial and Appeal Board, Case No. PGR2018-00020 filed for U.S. Pat. No. 9,811,184 between *Merchsource, LLC* (Petitioner) v. *DDC Technology, LLC*. (Patent Owner), Patent Owner's Revised Exhibit List, filed on Nov. 9, 2018 , 1 page.
United States Patent and Trademark Office, Before the Patent Trial and Appeal Board, Case No. PGR2018-00020 filed for U.S. Pat. No. 9,811,184 between *Merchsource, LLC* (Petitioner) v. *DDC Technology, LLC*. (Patent Owner), Patent Owner's Revised Exhibit List, filed on Jan. 18, 2019 , 5 pages.
United States Patent and Trademark Office, Before the Patent Trial and Appeal Board, Case No. PGR2018-00020 filed for U.S. Pat. No. 9,811,184 between *Merchsource, LLC* (Petitioner) v. *DDC Technology, LLC*. (Patent Owner), Patent Owner's Motion to Amend Pursuant to 37 C.F.R. § 42.121, filed on Dec. 17, 2018, 12 pages.
United States Patent and Trademark Office, Before the Patent Trial and Appeal Board, Case No. PGR2018-00020 filed for U.S. Pat. No. 9,811,184 between *Merchsource, LLC* (Petitioner) v. *DDC Technology, LLC*. (Patent Owner), Patent Owner's Motion to Amend Appendix-Claim Listing Pursuant to 37 C.F.R. § 42.121, filed on Dec. 17, 2018, 8 pages.
United States Patent and Trademark Office, Before the Patent Trial and Appeal Board, Case No. PGR2018-00020 filed for U.S. Pat. No. 9,811,184 between *Merchsource, LLC* (Petitioner) v. *DDC Technology, LLC*. (Patent Owner), Patent Owner's Motion for Withdrawal and Substitution of Counsel, filed on Nov. 9, 2018 , 5 pages.
United States Patent and Trademark Office, Before the Patent Trial and Appeal Board, Case No. PGR2018-00020 filed for U.S. Pat. No. 9,811,184 between *Merchsource, LLC* (Petitioner) v. *DDC Technology, LLC*. (Patent Owner), P Buckley—Tech in Motion Part 5, Exhibit# 2037, filed on Dec. 18, 2018, 1 pages.
United States Patent and Trademark Office, Before the Patent Trial and Appeal Board, Case No. PGR2018-00020 filed for U.S. Pat. No. 9,811,184 between *Merchsource, LLC* (Petitioner) v. *DDC Technology, LLC*. (Patent Owner), P Buckley—Tech in Motion Part 4, Exhibit# 2037, filed on Dec. 17, 2018, 1 pages.
United States Patent and Trademark Office, Before the Patent Trial and Appeal Board, Case No. PGR2018-00020 filed for U.S. Pat. No. 9,811,184 between *Merchsource, LLC* (Petitioner) v. *DDC Technology, LLC*. (Patent Owner), P Buckley—Tech in Motion Part 3, Exhibit# 2037, filed on Dec. 17, 2018, 1 pages.
United States Patent and Trademark Office, Before the Patent Trial and Appeal Board, Case No. PGR2018-00020 filed for U.S. Pat. No. 9,811,184 between *Merchsource, LLC* (Petitioner) v. *DDC Technology, LLC*. (Patent Owner), P Buckley—Tech in Motion Part 2, Exhibit# 2037, filed on Dec. 17, 2018, 1 pages.
United States Patent and Trademark Office, Before the Patent Trial and Appeal Board, Case No. PGR2018-00020 filed for U.S. Pat. No. 9,811,184 between *Merchsource, LLC* (Petitioner) v. *DDC Technology, LLC*. (Patent Owner), P Buckley—Tech in Motion Part 1, Exhibit# 2037, filed on Dec. 17, 2018, 1 pages.
United States Patent and Trademark Office, Before the Patent Trial and Appeal Board, Case No. IPR2018-00494 filed for U.S. Pat. No. 9,420,075 between *Merchsource, LLC* (Petitioner) v. *Dodocase, Inc*. (Patent Owner), Wayback machine—Gigaom, Exhibit# 1010, filed on Jan. 15, 2018, 9 pages.
United States Patent and Trademark Office, Before the Patent Trial and Appeal Board, Case No. IPR2018-00494 filed for U.S. Pat. No. 9,420,075 between *Merchsource, LLC* (Petitioner) v. *Dodocase, Inc*. (Patent Owner), Wayback machine—Gigaom comment feed, Exhibit# 1011, filed on Jan. 15, 2018, 1 pages.
United States Patent and Trademark Office, Before the Patent Trial and Appeal Board, Case No. IPR2018-00494 filed for U.S. Pat. No. 9,420,075 between *Merchsource, LLC* (Petitioner) v. *Dodocase, Inc*. (Patent Owner), Virtual Reality, Exhibit# 2048, filed on Dec. 17, 2018, 4 pages.
United States Patent and Trademark Office, Before the Patent Trial and Appeal Board, Case No. IPR2018-00494 filed for U.S. Pat. No. 9,420,075 between *Merchsource, LLC* (Petitioner) v. *Dodocase, Inc*. (Patent Owner), Virtual Reality Smartphone, Exhibit# 2047, filed on Dec. 17, 2018, 4 pages.
United States Patent and Trademark Office, Before the Patent Trial and Appeal Board, Case No. IPR2018-00494 filed for U.S. Pat. No. 9,420,075 between *Merchsource, LLC* (Petitioner) v. *Dodocase, Inc*. (Patent Owner), Virtual Reality Cardboard, Exhibit# 2045, filed on Dec. 17, 2018, 3 pages.
United States Patent and Trademark Office, Before the Patent Trial and Appeal Board, Case No. IPR2018-00494 filed for U.S. Pat. No. 9,420,075 between *Merchsource, LLC* (Petitioner) v. *Dodocase, Inc*. (Patent Owner), Virtual Reality Beginner's Guide, Exhibit# 2022, filed on Dec. 17, 2018, 10 pages.
United States Patent and Trademark Office, Before the Patent Trial and Appeal Board, Case No. IPR2018-00494 filed for U.S. Pat. No. 9,420,075 between *Merchsource, LLC* (Petitioner) v. *Dodocase, Inc*. (Patent Owner), USPTO Slides, Exhibit#2035, filed on Dec. 17, 2018, 82 pages.
United States Patent and Trademark Office, Before the Patent Trial and Appeal Board, Case No. IPR2018-00494 filed for U.S. Pat. No. 9,420,075 between *Merchsource, LLC* (Petitioner) v. *Dodocase, Inc*. (Patent Owner), US Publication No. 2013/0249870—Slaby, Exhibit# 1020, filed on Jan. 15, 2018, 24 pages.
United States Patent and Trademark Office, Before the Patent Trial and Appeal Board, Case No. IPR2018-00494 filed for U.S. Pat. No. 9,420,075 between *Merchsource, LLC* (Petitioner) v. *Dodocase, Inc*. (Patent Owner), US Publication No. 2013/0141360—Compton, Exhibit# 1008, filed on Jan. 15, 2018, 17 pages.
United States Patent and Trademark Office, Before the Patent Trial and Appeal Board, Case No. IPR2018-00494 filed for U.S. Pat. No. 9,420,075 between *Merchsource, LLC* (Petitioner) v. *Dodocase, Inc*. (Patent Owner), US Publication No. 2013/0002606—Mann, Exhibit# 1019, filed on Jan. 15, 2018, 20 pages.
United States Patent and Trademark Office, Before the Patent Trial and Appeal Board, Case No. IPR2018-00494 filed for U.S. Pat. No. 9,420,075 between *Merchsource, LLC* (Petitioner) v. *Dodocase, Inc*. (Patent Owner), US Publication No. 2012/0146957—Dunagan, Exhibit# 1018, filed on Jan. 15, 2018, 8 pages.
United States Patent and Trademark Office, Before the Patent Trial and Appeal Board, Case No. IPR2018-00494 filed for U.S. Pat. No. 9,420,075 between *Merchsource, LLC* (Petitioner) v. *Dodocase, Inc*. (Patent Owner), US Publication No. 2012/0139879—Kim, Exhibit# 1017, filed on Jan. 15, 2018, 9 pages.
United States Patent and Trademark Office, Before the Patent Trial and Appeal Board, Case No. IPR2018-00494 filed for U.S. Pat. No. 9,420,075 between *Merchsource, LLC* (Petitioner) v. *Dodocase, Inc*. (Patent Owner), US Publication No. 2012/0128995—Leto, Exhibit# 1016, filed on Jan. 15, 2018, 19 pages.
United States Patent and Trademark Office, Before the Patent Trial and Appeal Board, Case No. IPR2018-00494 filed for U.S. Pat. No. 9,420,075 between *Merchsource, LLC* (Petitioner) v. *Dodocase, Inc*. (Patent Owner), US Publication No. 2011/0164000—Pance, Exhibit# 1015, filed on Jan. 15, 2018, 12 pages.
United States Patent and Trademark Office, Before the Patent Trial and Appeal Board, Case No. IPR2018-00494 filed for U.S. Pat. No. 9,420,075 between *Merchsource, LLC* (Petitioner) v. *Dodocase, Inc*. (Patent Owner), US Publication No. 2011/0162894—Weber, Exhibit# 1014, filed on Jan. 15, 2018, 12 pages.
United States Patent and Trademark Office, Before the Patent Trial and Appeal Board, Case No. IPR2018-00494 filed for U.S. Pat. No. 9,420,075 between *Merchsource, LLC* (Petitioner) v. *Dodocase, Inc*. (Patent Owner), US Publication No. 2010/0309130—Zhao, Exhibit# 1033, filed on Mar. 18, 2019, 8 pages.

(56) **References Cited**

OTHER PUBLICATIONS

United States Patent and Trademark Office, Before the Patent Trial and Appeal Board, Case No. IPR2018-00494 filed for U.S. Pat. No. 9,420,075 between *Merchsource, LLC* (Petitioner) v. *Dodocase, Inc.* (Patent Owner), U.S. Appl. No. 62/025,376, Exhibit# 1005, filed on Jan. 15, 2018, 24 pages.
United States Patent and Trademark Office, Before the Patent Trial and Appeal Board, Case No. IPR2018-00494 filed for U.S. Pat. No. 9,420,075 between *Merchsource, LLC* (Petitioner) v. *Dodocase, Inc.* (Patent Owner), U.S. Appl. No. 62/161,857, Exhibit# 1006, filed on Jan. 15, 2018, 49 pages.
United States Patent and Trademark Office, Before the Patent Trial and Appeal Board, Case No. IPR2018-00494 filed for U.S. Pat. No. 9,420,075 between *Merchsource, LLC* (Petitioner) v. *Dodocase, Inc.* (Patent Owner), U.S. Pat. No. 9,420,075, Exhibit# 1001, filed on Jan. 15, 2018, 19 pages.
United States Patent and Trademark Office, Before the Patent Trial and Appeal Board, Case No. IPR2018-00494 filed for U.S. Pat. No. 9,420,075 between *Merchsource, LLC* (Petitioner) v. *Dodocase, Inc.* (Patent Owner), U.S. Pat. No. 9,420,075 File History, Exhibit# 1004, filed on Jan. 15, 2018, 248 pages.
United States Patent and Trademark Office, Before the Patent Trial and Appeal Board, Case No. IPR2018-00494 filed for U.S. Pat. No. 9,420,075 between *Merchsource, LLC* (Petitioner) v. *Dodocase, Inc.* (Patent Owner), U.S. Pat. No. 5,877,459—Prater, Exhibit# 1013, filed on Jan. 15, 2018, 7 pages.
United States Patent and Trademark Office, Before the Patent Trial and Appeal Board, Case No. IPR2018-00494 filed for U.S. Pat. No. 9,420,075 between *Merchsource, LLC* (Petitioner) v. *Dodocase, Inc.* (Patent Owner), U.S. Pub. No. 2014/0247246 Maus, Exhibit# 1032, filed on Mar 18, 2019, 51 pages.
United States Patent and Trademark Office, Before the Patent Trial and Appeal Board, Case No. IPR2018-00494 filed for U.S. Pat. No. 9,420,075 between *Merchsource, LLC* (Petitioner) v. *Dodocase, Inc.* (Patent Owner), Twitter, Exhibit# 2034, filed on Dec. 17, 2018, 1 pages.
United States Patent and Trademark Office, Before the Patent Trial and Appeal Board, Case No. IPR2018-00494 filed for U.S. Pat. No. 9,420,075 between *Merchsource, LLC* (Petitioner) v. *Dodocase, Inc.* (Patent Owner), Transcript, Exhibit# 2051, filed on Dec. 17, 2018, 182 pages.
United States Patent and Trademark Office, Before the Patent Trial and Appeal Board, Case No. IPR2018-00494 filed for U.S. Pat. No. 9,420,075 between *Merchsource, LLC* (Petitioner) v. *Dodocase, Inc.* (Patent Owner), Transcript of Jan. 4 Conference, Exhibit# 1026, filed on Jan. 20, 2019, 32 pages.
United States Patent and Trademark Office, Before the Patent Trial and Appeal Board, Case No. IPR2018-00494 filed for U.S. Pat. No. 9,420,075 between *Merchsource, LLC* (Petitioner) v. *Dodocase, Inc.* (Patent Owner), Transcript of Sep. 20, 2018 Phone Conference, Exhibit# 1023, filed on Oct. 8, 2018, 27 pages.
United States Patent and Trademark Office, Before the Patent Trial and Appeal Board, Case No. IPR2018-00494 filed for U.S. Pat. No. 9,420,075 between *Merchsource, LLC* (Petitioner) v. *Dodocase, Inc.* (Patent Owner), Tech in Motion, Part 5, Exhibit# 2037, filed on Dec. 17, 2018, 1 pages.
United States Patent and Trademark Office, Before the Patent Trial and Appeal Board, Case No. IPR2018-00494 filed for U.S. Pat. No. 9,420,075 between *Merchsource, LLC* (Petitioner) v. *Dodocase, Inc.* (Patent Owner), Tech in Motion, Part 4, Exhibit# 2037, filed on Dec. 17, 2018, 1 pages.
United States Patent and Trademark Office, Before the Patent Trial and Appeal Board, Case No. IPR2018-00494 filed for U.S. Pat. No. 9,420,075 between *Merchsource, LLC* (Petitioner) v. *Dodocase, Inc.* (Patent Owner), Tech in Motion, Part 3, Exhibit# 2037, filed on Dec. 17, 2018, 1 pages.
United States Patent and Trademark Office, Before the Patent Trial and Appeal Board, Case No. IPR2018-00494 filed for U.S. Pat. No. 9,420,075 between *Merchsource, LLC* (Petitioner) v. *Dodocase, Inc.* (Patent Owner), Tech in Motion, Part 2, Exhibit# 2037, filed on Dec. 17, 2018, 1 pages.
United States Patent and Trademark Office, Before the Patent Trial and Appeal Board, Case No. IPR2018-00494 filed for U.S. Pat. No. 9,420,075 between *Merchsource, LLC* (Petitioner) v. *Dodocase, Inc.* (Patent Owner), SVVR Meetup, Exhibit# 2049, filed on Dec. 17, 2018, 7 pages.
United States Patent and Trademark Office, Before the Patent Trial and Appeal Board, Case No. IPR2018-00494 filed for U.S. Pat. No. 9,420,075 between *Merchsource, LLC* (Petitioner) v. *Dodocase, Inc.* (Patent Owner), Supplemental Evidence and Declaration of Christopher Butler, Exhibit# 1030, filed on Mar 18, 2019, 20 pages.
United States Patent and Trademark Office, Before the Patent Trial and Appeal Board, Case No. IPR2018-00494 filed for U.S. Pat. No. 9,420,075 between *Merchsource, LLC* (Petitioner) v. *Dodocase, Inc.* (Patent Owner), Silicon Valley VR Meetup, Part 8, Exhibit# 2039, filed on Dec. 17, 2018, 1 pages.
United States Patent and Trademark Office, Before the Patent Trial and Appeal Board, Case No. IPR2018-00494 filed for U.S. Pat. No. 9,420,075 between *Merchsource, LLC* (Petitioner) v. *Dodocase, Inc.* (Patent Owner), Silicon Valley VR Meetup, Part 7, Exhibit# 2039, filed on Dec. 17, 2018, 1 pages.
United States Patent and Trademark Office, Before the Patent Trial and Appeal Board, Case No. IPR2018-00494 filed for U.S. Pat. No. 9,420,075 between *Merchsource, LLC* (Petitioner) v. *Dodocase, Inc.* (Patent Owner), Silicon Valley VR Meetup, Part 6, Exhibit# 2039, filed on Dec. 17, 2018, 1 pages.
United States Patent and Trademark Office, Before the Patent Trial and Appeal Board, Case No. IPR2018-00494 filed for U.S. Pat. No. 9,420,075 between *Merchsource, LLC* (Petitioner) v. *Dodocase, Inc.* (Patent Owner), Silicon Valley VR Meetup, Part 5, Exhibit# 2039, filed on Dec. 17, 2018, 1 pages.
United States Patent and Trademark Office, Before the Patent Trial and Appeal Board, Case No. IPR2018-00494 filed for U.S. Pat. No. 9,420,075 between *Merchsource, LLC* (Petitioner) v. *Dodocase, Inc.* (Patent Owner), Silicon Valley VR Meetup, Part 4, Exhibit# 2039, filed on Dec. 17, 2018, 1 pages.
United States Patent and Trademark Office, Before the Patent Trial and Appeal Board, Case No. IPR2018-00494 filed for U.S. Pat. No. 9,420,075 between *Merchsource, LLC* (Petitioner) v. *Dodocase, Inc.* (Patent Owner), Silicon Valley VR Meetup, Part 3, Exhibit# 2039, filed on Dec. 17, 2018, 1 pages.
United States Patent and Trademark Office, Before the Patent Trial and Appeal Board, Case No. IPR2018-00494 filed for U.S. Pat. No. 9,420,075 between *Merchsource, LLC* (Petitioner) v. *Dodocase, Inc.* (Patent Owner), Silicon Valley VR Meetup, Part 2, Exhibit# 2039, filed on Dec. 17, 2018, 1 pages.
United States Patent and Trademark Office, Before the Patent Trial and Appeal Board, Case No. IPR2018-00494 filed for U.S. Pat. No. 9,420,075 between *Merchsource, LLC* (Petitioner) v. *Dodocase, Inc.* (Patent Owner), Silicon Valley VR Meetup, Part 1, Exhibit# 2039, filed on Dec. 17, 2018, 1 pages.
United States Patent and Trademark Office, Before the Patent Trial and Appeal Board, Case No. IPR2018-00494 filed for U.S. Pat. No. 9,420,075 between *Merchsource, LLC* (Petitioner) v. *Dodocase, Inc.* (Patent Owner), Signe Brewster, Why Google Cardboard is Actually a Huge Boost for Virtual Reality "Gigaom (Jun. 28 2014)", Exhibit# 1009, filed on Jan. 15, 2018, 11 pages.
United States Patent and Trademark Office, Before the Patent Trial and Appeal Board, Case No. IPR2018-00494 filed for U.S. Pat. No. 9,420,075 between *Merchsource, LLC* (Petitioner) v. *Dodocase, Inc.* (Patent Owner), Signature Page Regan Arts, Exhibit# 2027, filed on Dec 17, 2018, 1 pages.
United States Patent and Trademark Office, Before the Patent Trial and Appeal Board, Case No. IPR2018-00494 filed for U.S. Pat. No. 9,420,075 between *Merchsource, LLC* (Petitioner) v. *Dodocase, Inc.* (Patent Owner), Shipping Label, Exhibit# 2024, filed on Dec. 17, 2018, 2 pages.

(56) **References Cited**

OTHER PUBLICATIONS

United States Patent and Trademark Office, Before the Patent Trial and Appeal Board, Case No. IPR2018-00494 filed for U.S. Pat. No. 9,420,075 between *Merchsource, LLC* (Petitioner) v. *Dodocase, Inc.* (Patent Owner), SFHTML5 Meetup, Part 8, Exhibit# 2040, filed on Dec. 17, 2018, 1 pages.
United States Patent and Trademark Office, Before the Patent Trial and Appeal Board, Case No. IPR2018-00494 filed for U.S. Pat. No. 9,420,075 between *Merchsource, LLC* (Petitioner) v. *Dodocase, Inc.* (Patent Owner), SFHTML5 Meetup, Part 7, Exhibit# 2040, filed on Dec. 17, 2018, 1 pages.
United States Patent and Trademark Office, Before the Patent Trial and Appeal Board, Case No. IPR2018-00494 filed for U.S. Pat. No. 9,420,075 between *Merchsource, LLC* (Petitioner) v. *Dodocase, Inc.* (Patent Owner), SFHTML5 Meetup, Part 6, Exhibit# 2040, filed on Dec. 17, 2018, 1 pages.
United States Patent and Trademark Office, Before the Patent Trial and Appeal Board, Case No. IPR2018-00494 filed for U.S. Pat. No. 9,420,075 between *Merchsource, LLC* (Petitioner) v. *Dodocase, Inc.* (Patent Owner), SFHTML5 Meetup, Part 5, Exhibit# 2040, filed on Dec. 17, 2018, 1 pages.
United States Patent and Trademark Office, Before the Patent Trial and Appeal Board, Case No. IPR2018-00494 filed for U.S. Pat. No. 9,420,075 between *Merchsource, LLC* (Petitioner) v. *Dodocase, Inc.* (Patent Owner), SFHTML5 Meetup, Part 4, Exhibit# 2040, filed on Dec. 17, 2018, 1 pages.
United States Patent and Trademark Office, Before the Patent Trial and Appeal Board, Case No. IPR2018-00494 filed for U.S. Pat. No. 9,420,075 between *Merchsource, LLC* (Petitioner) v. *Dodocase, Inc.* (Patent Owner), SFHTML5 Meetup, Part 3, Exhibit# 2040, filed on Dec. 17, 2018, 1 pages.
United States Patent and Trademark Office, Before the Patent Trial and Appeal Board, Case No. IPR2018-00494 filed for U.S. Pat. No. 9,420,075 between *Merchsource, LLC* (Petitioner) v. *Dodocase, Inc.* (Patent Owner), SFHTML5 Meetup, Part 2, Exhibit# 2040, filed on Dec. 17, 2018, 1 pages.
United States Patent and Trademark Office, Before the Patent Trial and Appeal Board, Case No. PGR2018-00020 filed for U.S. Pat. No. 9,811,184 between *Merchsource, LLC* (Petitioner) v. *DDC Technology, LLC.* (Patent Owner), , Exhibit#2012, filed on May 25, 2018, 8 pages.
United States Patent and Trademark Office, Before the Patent Trial and Appeal Board, Case No. PGR2018-00020 filed for U.S. Pat. No. 9,811,184 between *Merchsource, LLC* (Petitioner) v. *DDC Technology, LLC.* (Patent Owner), , Exhibit#2011, filed on May 25, 2018, 25 pages.
United States Patent and Trademark Office, Before the Patent Trial and Appeal Board, Case No. PGR2018-00020 filed for U.S. Pat. No. 9,811,184 between *Merchsource, LLC* (Petitioner) v. *DDC Technology, LLC.* (Patent Owner), , Exhibit#2010, filed on May 25, 2018, 3 pages.
United States Patent and Trademark Office, Before the Patent Trial and Appeal Board, Case No. PGR2018-00020 filed for U.S. Pat. No. 9,811,184 between *Merchsource, LLC* (Petitioner) v. *DDC Technology, LLC.* (Patent Owner), , Exhibit#2009, filed on May 25, 2018, 2 pages.
United States Patent and Trademark Office, Before the Patent Trial and Appeal Board, Case No. PGR2018-00020 filed for U.S. Pat. No. 9,811,184 between *Merchsource, LLC* (Petitioner) v. *DDC Technology, LLC.* (Patent Owner), , Exhibit#2008, filed on May 25, 2018, 1 pages.
United States Patent and Trademark Office, Before the Patent Trial and Appeal Board, Case No. PGR2018-00020 filed for U.S. Pat. No. 9,811,184 between *Merchsource, LLC* (Petitioner) v. *DDC Technology, LLC.* (Patent Owner), , Exhibit#2007, filed on May 25, 2018, 9 pages.
United States Patent and Trademark Office, Before the Patent Trial and Appeal Board, Case No. PGR2018-00020 filed for U.S. Pat. No. 9,811,184 between *Merchsource, LLC* (Petitioner) v. *DDC Technology, LLC.* (Patent Owner), , Exhibit#2006, filed on May 25, 2018, 2 pages.
United States Patent and Trademark Office, Before the Patent Trial and Appeal Board, Case No. PGR2018-00020 filed for U.S. Pat. No. 9,811,184 between *Merchsource, LLC* (Petitioner) v. *DDC Technology, LLC.* (Patent Owner), , Exhibit#2005, filed on May 25, 2018, 4 pages.
United States Patent and Trademark Office, Before the Patent Trial and Appeal Board, Case No. PGR2018-00020 filed for U.S. Pat. No. 9,811,184 between *Merchsource, LLC* (Petitioner) v. *DDC Technology, LLC.* (Patent Owner), , Exhibit#2004, filed on May 25, 2018, 3 pages.
United States Patent and Trademark Office, Before the Patent Trial and Appeal Board, Case No. PGR2018-00020 filed for U.S. Pat. No. 9,811,184 between *Merchsource, LLC* (Petitioner) v. *DDC Technology, LLC.* (Patent Owner), , Exhibit#2003, filed on May 25, 2018, 2 pages.
United States Patent and Trademark Office, Before the Patent Trial and Appeal Board, Case No. PGR2018-00020 filed for U.S. Pat. No. 9,811,184 between *Merchsource, LLC* (Petitioner) v. *DDC Technology, LLC.* (Patent Owner), , Exhibit#2002, filed on May 25, 2018, 1 pages.
United States Patent and Trademark Office, Before the Patent Trial and Appeal Board, Case No. PGR2018-00020 filed for U.S. Pat. No. 9,811,184 between *Merchsource, LLC* (Petitioner) v. *DDC Technology, LLC.* (Patent Owner), , Exhibit# 2001, filed on May 25, 2018, 18 pages.
United States Patent and Trademark Office, Before the Patent Trial and Appeal Board, Case No. PGR2018-00020 filed for U.S. Pat. No. 9,811,184 between *Merchsource, LLC* (Petitioner) v. *DDC Technology, LLC.* (Patent Owner), , Exhibit# 2001, filed on May 25, 2018, 1 pages.
United States Patent and Trademark Office, Before the Patent Trial and Appeal Board, Case No. PGR2018-00020 filed for U.S. Pat. No. 9,811,184 between *Merchsource, LLC* (Petitioner) v. *DDC Technology, LLC* (Patent Owner), Power of Attorney of DDC Technology, LLC., filed on Nov. 2, 2018, 3 pages.
United States Patent and Trademark Office, Before the Patent Trial and Appeal Board, Case No. PGR2018-00020 filed for U.S. Pat. No. 9,811,184 between *Merchsource, LLC* (Petitioner) v. *DDC Technology, LLC* (Patent Owner), Mandatory Notice by Patent Owner Under 37 CFR § 42.8, filed on Nov. 2, 2018 , 3 pages.
United States Patent and Trademark Office, Before the Patent Trial and Appeal Board, Case No. PGR2018-00020 filed for U.S. Pat. No. 9,811,184 between *Merchsource, LLC* (Petitioner) v. *DDC Technology, LLC* (Patent Owner), Before Kalyan K. Deshpande, Patrick M. Boucher, and Matthew J. McNeill, Administrative Patent Judges, Deshpande, Administrative Patent Judge, Order, Granting Petitioner's Motions for Admission Pro Hac Vice of Kyle B. Fleming 37 C.F.R. § 42.10, Entered on Jan. 2, 2019, 4 pages.
United States Patent and Trademark Office, Before the Patent Trial and Appeal Board, Case No. PGR2018-00020 filed for U.S. Pat. No. 9,811,184 between *Merchsource, LLC* (Petitioner) v. *DDC Technology, LLC* (Patent Owner), Before Kalyan K. Deshpande, Patrick M. Boucher, and Matthew J. McNeill, Administrative Patent Judges, Boucher, Administrative Patent Judge, Order, Additional Discovery 37 C.F.R. §§ 42.5, 42.51(b)(2), Entered on Jan. 7, 2019, 3 pages.
United States Patent and Trademark Office, Before the Patent Trial and Appeal Board, Case No. PGR2018-00020 filed for U.S. Pat. No. 9,811,184 between *Merchsource, LLC* (Petitioner) v. *DDC Technology, LLC* (Patent Owner), Before Kalyan K. Deshpande, Patrick M. Boucher, and Matthew J. McNeill, Administrative Patent Judges, Boucher, Administrative Patent Judge, Decision, Motion for Pro Hac Vice Admission of Gabriel I. Opatken 37 C.F.R. § 42.10, Entered on Jan. 25, 2019, 4 pages.
United States Patent and Trademark Office, Before the Patent Trial and Appeal Board, Case No. PGR2018-00020 filed for U.S. Pat. No. 9,811,184 between *Merchsource, LLC* (Petitioner) v. *DDC Technology, LLC* (Patent Owner), Before Kalyan K. Deshpande, Patrick M. Boucher, and Matthew J. McNeill, Administrative Patent Judges, Deshpande, Administrative Patent Judge, Conduct of the Proceeding 37 C.F.R. § 42.5, Entered on Nov. 20, 2018, 3 pages.

(56) **References Cited**

OTHER PUBLICATIONS

United States Patent and Trademark Office, Before the Patent Trial and Appeal Board, Case No. PGR2018-00019 filed for U.S. Pat. No. 9,723,117 between *Merchsource, LLC* (Petitioner) v. *DDC Technology, LLC*. (Patent Owner), YouTube Video Prince Ramteke, Use Google Cardboard Without Magnetometer (Enabling Magnetic Ring Support to Every Device) YouTube (May 10, Exhibit# 1008, filed on Jan 15, 2018, 2015) Part 1 3:32-7:15.
United States Patent and Trademark Office, Before the Patent Trial and Appeal Board, Case No. PGR2018-00019 filed for U.S. Pat. No. 9,723,117 between *Merchsource, LLC* (Petitioner) v. *DDC Technology, LLC*. (Patent Owner), YouTube Video Prince Ramteke, Use Google Cardboard Without Magnetometer (Enabling Magnetic Ring Support to Every Device) YouTube (May 10, 2015) Part 1 7:15-End, Exhibit# 1008, filed on Jan. 15, 2018, 1 pages.
United States Patent and Trademark Office, Before the Patent Trial and Appeal Board, Case No. PGR2018-00019 filed for U.S. Pat. No. 9,723,117 between *Merchsource, LLC* (Petitioner) v. *DDC Technology, LLC*. (Patent Owner), YouTube Video Prince Ramteke, Use Google Cardboard Without Magnetometer (Enabling Magnetic Ring Support to Every Device) YouTube (May 10, 2015) Part 1 0:00-3:32, Exhibit# 1008, filed on Jan. 15, 2018, 1 pages.
United States Patent and Trademark Office, Before the Patent Trial and Appeal Board, Case No. PGR2018-00019 filed for U.S. Pat. No. 9,723,117 between *Merchsource, LLC* (Petitioner) v. *DDC Technology, LLC*. (Patent Owner), YouTube Video—GoogleDevelopers, Google I/O 2014—Cardboard: VR for Android "YouTube (Jun. 27, 2014), Exhibit# 1010, filed on Jan. 15, 2018, Part 9—37:47-41:13" pages.
United States Patent and Trademark Office, Before the Patent Trial and Appeal Board, Case No. PGR2018-00019 filed for U.S. Pat. No. 9,723,117 between *Merchsource, LLC* (Petitioner) v. *DDC Technology, LLC*. (Patent Owner), YouTube Video—GoogleDevelopers, Google I/O 2014—Cardboard: VR for Android "YouTube (Jun. 27, 2014), Exhibit# 1010, filed on Jan. 15, 2018, Part 8—32:57-37:47".
United States Patent and Trademark Office, Before the Patent Trial and Appeal Board, Case No. PGR2018-00019 filed for U.S. Pat. No. 9,723,117 between *Merchsource, LLC* (Petitioner) v. *DDC Technology, LLC*. (Patent Owner), YouTube Video—GoogleDevelopers, Google I/O 2014—Cardboard: VR for Android "YouTube (Jun. 27, 2014), Exhibit# 1010, filed on Jan. 15, 2018, Part 7—28:07-32:57".
United States Patent and Trademark Office, Before the Patent Trial and Appeal Board, Case No. PGR2018-00019 filed for U.S. Pat. No. 9,723,117 between *Merchsource, LLC* (Petitioner) v. *DDC Technology, LLC*. (Patent Owner), YouTube Video—GoogleDevelopers, Google I/O 2014—Cardboard: VR for Android "YouTube (Jun. 27, 2014), Exhibit# 1010, filed on Jan. 15, 2018, Part 6—22:59-28:07".
United States Patent and Trademark Office, Before the Patent Trial and Appeal Board, Case No. PGR2018-00019 filed for U.S. Pat. No. 9,723,117 between *Merchsource, LLC* (Petitioner) v. *DDC Technology, LLC*. (Patent Owner), YouTube Video—GoogleDevelopers, Google I/O 2014—Cardboard: VR for Android "YouTube (Jun. 27, 2014), Exhibit# 1010, filed on Jan. 15, 2018, Part 5—18:22-22:59".
United States Patent and Trademark Office, Before the Patent Trial and Appeal Board, Case No. PGR2018-00019 filed for U.S. Pat. No. 9,723,117 between *Merchsource, LLC* (Petitioner) v. *DDC Technology, LLC*. (Patent Owner), YouTube Video—GoogleDevelopers, Google I/O 2014—Cardboard: VR for Android "YouTube (Jun. 27, 2014), Exhibit# 1010, filed on Jan. 15, 2018, Part 4—13:32-18:22".
United States Patent and Trademark Office, Before the Patent Trial and Appeal Board, Case No. PGR2018-00019 filed for U.S. Pat. No. 9,723,117 between *Merchsource, LLC* (Petitioner) v. *DDC Technology, LLC*. (Patent Owner), YouTube Video—GoogleDevelopers, Google I/O 2014—Cardboard: VR for Android "YouTube (Jun. 27, 2014), Exhibit# 1010, filed on Jan. 15, 2018, Part 3—9:10-13:32".
United States Patent and Trademark Office, Before the Patent Trial and Appeal Board, Case No. PGR2018-00019 filed for U.S. Pat. No. 9,723,117 between *Merchsource, LLC* (Petitioner) v. *DDC Technology, LLC*. (Patent Owner), YouTube Video—GoogleDevelopers, Google I/O 2014—Cardboard: VR for Android "YouTube (Jun. 27, 2014), Exhibit# 1010, filed on Jan. 15, 2018, Part 2—4:24-9:10".
United States Patent and Trademark Office, Before the Patent Trial and Appeal Board, Case No. PGR2018-00019 filed for U.S. Pat. No. 9,723,117 between *Merchsource, LLC* (Petitioner) v. *DDC Technology, LLC*. (Patent Owner), YouTube Video—GoogleDevelopers, Google I/O 2014—Cardboard: VR for Android "YouTube (Jun. 27, 2014), Exhibit# 1010, filed on Jan. 15, 2018, Part 10—41:13-End".
United States Patent and Trademark Office, Before the Patent Trial and Appeal Board, Case No. PGR2018-00019 filed for U.S. Pat. No. 9,723,117 between *Merchsource, LLC* (Petitioner) v. *DDC Technology, LLC*. (Patent Owner), YouTube Video—GoogleDevelopers, Google I/O 2014—Cardboard: VR for Android "YouTube (Jun. 27, 2014), Exhibit# 1010, filed on Jan. 15, 2018, Part 1—0:00-4:24".
United States Patent and Trademark Office, Before the Patent Trial and Appeal Board, Case No. PGR2018-00019 filed for U.S. Pat. No. 9,723,117 between *Merchsource, LLC* (Petitioner) v. *DDC Technology, LLC*. (Patent Owner), YouTube Objections to Subpoena and Declaration, Exhibit# 1029, filed on Mar. 18, 2019, 14 pages.
United States Patent and Trademark Office, Before the Patent Trial and Appeal Board, Case No. PGR2018-00019 filed for U.S. Pat. No. 9,723,117 between *Merchsource, LLC* (Petitioner) v. *DDC Technology, LLC*. (Patent Owner), Wayback machine—Gigaom, Exhibit# 1012, filed on Jan. 15, 2018, 9 pages.
United States Patent and Trademark Office, Before the Patent Trial and Appeal Board, Case No. PGR2018-00019 filed for U.S. Pat. No. 9,723,117 between *Merchsource, LLC* (Petitioner) v. *DDC Technology, LLC*. (Patent Owner), Wayback machine—Gigaom comment feed, Exhibit# 1013, filed on Jan. 15, 2018, 1 pages.
United States Patent and Trademark Office, Before the Patent Trial and Appeal Board, Case No. PGR2018-00019 filed for U.S. Pat. No. 9,723,117 between *Merchsource, LLC* (Petitioner) v. *DDC Technology, LLC*. (Patent Owner), VR Instructional Videos, Exhibit# 2044, filed on Dec. 17, 2018, 4 pages.
United States Patent and Trademark Office, Before the Patent Trial and Appeal Board, Case No. PGR2018-00019 filed for U.S. Pat. No. 9,723,117 between *Merchsource, LLC* (Petitioner) v. *DDC Technology, LLC*. (Patent Owner), Virtual Reality, Exhibit# 2048, tiled on Dec. 17, 2018, 4 pages.
United States Patent and Trademark Office, Before the Patent Trial and Appeal Board, Case No. PGR2018-00019 filed for U.S. Pat. No. 9,723,117 between *Merchsource, LLC* (Petitioner) v. *DDC Technology, LLC*. (Patent Owner), Virtual Reality Smartphone, Exhibit# 2047, filed on Dec. 17, 2018, 4 pages.
United States Patent and Trademark Office, Before the Patent Trial and Appeal Board, Case No. PGR2018-00019 filed for U.S. Pat. No. 9,723,117 between *Merchsource, LLC* (Petitioner) v. *DDC Technology, LLC*. (Patent Owner), Virtual Reality Cardboard, Exhibit# 2045, filed on Dec. 17, 2018, 3 pages.
United States Patent and Trademark Office, Before the Patent Trial and Appeal Board, Case No. PGR2018-00019 filed for U.S. Pat. No. 9,723,117 between *Merchsource, LLC* (Petitioner) v. *DDC Technology, LLC*. (Patent Owner), Virtual Reality Beginner's Guide, Exhibit# 2022, filed on Dec. 17, 2018, 10 pages.
United States Patent and Trademark Office, Before the Patent Trial and Appeal Board, Case No. PGR2018-00019 filed for U.S. Pat. No. 9,723,117 between *Merchsource, LLC* (Petitioner) v. *DDC Technology, LLC*. (Patent Owner), USPTO Slides, Exhibit# 2035, filed on Dec. 17, 2018, 82 pages.
United States Patent and Trademark Office, Before the Patent Trial and Appeal Board, Case No. PGR2018-00019 filed for U.S. Pat. No. 9,723,117 between *Merchsource, LLC* (Petitioner) v. *DDC Technology, LLC*. (Patent Owner), US Publication No. 2010/0309130—Zhao, Exhibit# 1033, filed on Mar. 18, 2019, 8 pages.
United States Patent and Trademark Office, Before the Patent Trial and Appeal Board, Case No. PGR2018-00019 filed for U.S. Pat. No. 9,723,117 between *Merchsource, LLC* (Petitioner) v. *DDC Technology, LLC*. (Patent Owner), U.S. Appl. No. 62/161,857, Exhibit# 1006, filed on Jan. 15, 2018, 49 pages.
United States Patent and Trademark Office, Before the Patent Trial and Appeal Board, Case No. PGR2018-00019 filed for U.S. Pat. No. 9,723,117 between *Merchsource, LLC* (Petitioner) v. *DDC Technology, LLC*. (Patent Owner), U.S. Appl. No. 62/025,376, Exhibit# 1005, filed on Jan. 15, 2018, 24 pages.

(56) **References Cited**

OTHER PUBLICATIONS

United States Patent and Trademark Office, Before the Patent Trial and Appeal Board, Case No. PGR2018-00019 filed for U.S. Pat. No. 9,723,117 between *Merchsource, LLC* (Petitioner) v. *DDC Technology, LLC*. (Patent Owner), US Patent Publication No. 2013/0249870—Slaby, Exhibit# 1021, filed on Jan. 15, 2018, 24 pages.
United States Patent and Trademark Office, Before the Patent Trial and Appeal Board, Case No. PGR2018-00019 filed for U.S. Pat. No. 9,723,117 between *Merchsource, LLC* (Petitioner) v. *DDC Technology, LLC*. (Patent Owner), US Patent Publication No. 2013/0141360—Compton, Exhibit# 1009, filed on Jan. 15, 2018, 17 pages.
United States Patent and Trademark Office, Before the Patent Trial and Appeal Board, Case No. PGR2018-00019 filed for U.S. Pat. No. 9,723,117 between *Merchsource, LLC* (Petitioner) v. *DDC Technology, LLC*. (Patent Owner), US Patent Publication No. 2013/0002606—Mann, Exhibit# 1020, filed on Jan. 15, 2018, 20 pages.
United States Patent and Trademark Office, Before the Patent Trial and Appeal Board, Case No. PGR2018-00019 filed for U.S. Pat. No. 9,723,117 between *Merchsource, LLC* (Petitioner) v. *DDC Technology, LLC*. (Patent Owner), US Patent Publication No. 2012/0146957—Dunagan, Exhibit# 1019, filed on Jan. 15, 2018, 8 pages.
United States Patent and Trademark Office, Before the Patent Trial and Appeal Board, Case No. PGR2018-00019 filed for U.S. Pat. No. 9,723,117 between *Merchsource, LLC* (Petitioner) v. *DDC Technology, LLC*. (Patent Owner), US Patent Publication No. 2012/0139879—Kim, Exhibit# 1018, filed on Jan. 15, 2018, 9 pages.
United States Patent and Trademark Office, Before the Patent Trial and Appeal Board, Case No. PGR2018-00019 filed for U.S. Pat. No. 9,723,117 between *Merchsource, LLC* (Petitioner) v. *DDC Technology, LLC*. (Patent Owner), US Patent Publication No. 2012/0128995—Leto, Exhibit# 1017, filed on Jan. 15, 2018, 19 pages.
United States Patent and Trademark Office, Before the Patent Trial and Appeal Board, Case No. PGR2018-00019 filed for U.S. Pat. No. 9,723,117 between *Merchsource, LLC* (Petitioner) v. *DDC Technology, LLC*. (Patent Owner), US Patent Publication No. 2011/0164000—Pance, Exhibit# 1016, filed on Jan. 15, 2018, 12 pages.
United States Patent and Trademark Office, Before the Patent Trial and Appeal Board, Case No. PGR2018-00019 filed for U.S. Pat. No. 9,723,117 between *Merchsource, LLC* (Petitioner) v. *DDC Technology, LLC*. (Patent Owner), US Patent Publication No. 2011/0162894—Weber, Exhibit# 1015, filed on Jan. 15, 2018, 12 pages.
United States Patent and Trademark Office, Before the Patent Trial and Appeal Board, Case No. PGR2018-00019 filed for U.S. Pat. No. 9,723,117 between *Merchsource, LLC* (Petitioner) v. *DDC Technology, LLC*. (Patent Owner), U.S. Pat. No. 5,877,459—Prater, Exhibit# 1014, filed on Jan. 15, 2018, 7 pages.
United States Patent and Trademark Office, Before the Patent Trial and Appeal Board, Case No. PGR2018-00019 filed for U.S. Pat. No. 9,723,117 between *Merchsource, LLC* (Petitioner) v. *DDC Technology, LLC*. (Patent Owner), U.S. Pat. No. 9,723,117, Exhibit# 1001, filed on Jan. 15, 2018, 19 pages.
United States Patent and Trademark Office, Before the Patent Trial and Appeal Board, Case No. PGR2018-00019 filed for U.S. Pat. No. 9,723,117 between *Merchsource, LLC* (Petitioner) v. *DDC Technology, LLC*. (Patent Owner), U.S. Pat. No. 9,723,117 File History, Exhibit# 1004, filed on Jan. 15, 2018, 205 pages.
United States Patent and Trademark Office, Before the Patent Trial and Appeal Board, Case No. PGR2018-00019 filed for U.S. Pat. No. 9,723,117 between *Merchsource, LLC* (Petitioner) v. *DDC Technology, LLC*. (Patent Owner), U.S. Pat. No. 9,420,075 File History, Exhibit# 1011, filed on Jan. 15, 2018, 248 pages.
United States Patent and Trademark Office, Before the Patent Trial and Appeal Board, Case No. PGR2018-00019 filed for U.S. Pat. No. 9,723,117 between *Merchsource, LLC* (Petitioner) v. *DDC Technology, LLC*. (Patent Owner), Unsigned Contract Regan Arts, Exhibit# 2028, filed on Dec. 17, 2018, 12 pages.
United States Patent and Trademark Office, Before the Patent Trial and Appeal Board, Case No. PGR2018-00019 filed for U.S. Pat. No. 9,723,117 between *Merchsource, LLC* (Petitioner) v. *DDC Technology, LLC*. (Patent Owner), U.S. Publication No. 2014/0247246—Maus, Exhibit# 1032, filed on Mar. 18, 2019, 51 pages.
United States Patent and Trademark Office, Before the Patent Trial and Appeal Board, Case No. PGR2018-00019 filed for U.S. Pat. No. 9,723,117 between *Merchsource, LLC* (Petitioner) v. *DDC Technology, LLC*. (Patent Owner), Twitter, Exhibit# 2034, filed on Dec. 17, 2018, 1 pages.
United States Patent and Trademark Office, Before the Patent Trial and Appeal Board, Case No. PGR2018-00019 filed for U.S. Pat. No. 9,723,117 between *Merchsource, LLC* (Petitioner) v. *DDC Technology, LLC*. (Patent Owner), Transcript, Exhibit# 2051, filed on Dec. 17, 2018, 182 pages.
United States Patent and Trademark Office, Before the Patent Trial and Appeal Board, Case No. PGR2018-00019 filed for U.S. Pat. No. 9,723,117 between *Merchsource, LLC* (Petitioner) v. *DDC Technology, LLC*. (Patent Owner), Transcript of Jan. 4 Teleconference, Exhibit# 1027, filed on Jan. 20, 2019, 32 pages.
United States Patent and Trademark Office, Before the Patent Trial and Appeal Board, Case No. PGR2018-00019 filed for U.S. Pat. No. 9,723,117 between *Merchsource, LLC* (Petitioner) v. *DDC Technology, LLC*. (Patent Owner), Transcript of Sep. 20, 2018 Phone Conference, Exhibit# 1024, filed on Oct. 8, 2018, 27 pages.
United States Patent and Trademark Office, Before the Patent Trial and Appeal Board, Case No. PGR2018-00019 filed for U.S. Pat. No. 9,723,117 between *Merchsource, LLC* (Petitioner) v. *DDC Technology, LLC*. (Patent Owner), Tech in Motion, Part 5, Exhibit# 2037, filed on Dec. 17, 2018, 1 pages.
United States Patent and Trademark Office, Before the Patent Trial and Appeal Board, Case No. PGR2018-00019 filed for U.S. Pat. No. 9,723,117 between *Merchsource, LLC* (Petitioner) v. *DDC Technology, LLC*. (Patent Owner), Tech in Motion, Part 4, Exhibit# 2037, filed on Dec. 17, 2018, 1 pages.
United States Patent and Trademark Office, Before the Patent Trial and Appeal Board, Case No. PGR2018-00019 filed for U.S. Pat. No. 9,723,117 between *Merchsource, LLC* (Petitioner) v. *DDC Technology, LLC*. (Patent Owner), Tech in Motion, Part 3, Exhibit# 2037, filed on Dec. 17, 2018, 1 pages.
United States Patent and Trademark Office, Before the Patent Trial and Appeal Board, Case No. PGR2018-00019 filed for U.S. Pat. No. 9,723,117 between *Merchsource, LLC* (Petitioner) v. *DDC Technology, LLC*. (Patent Owner), Tech in Motion, Part 2, Exhibit# 2037, filed on Dec. 17, 2018, 1 pages.
United States Patent and Trademark Office, Before the Patent Trial and Appeal Board, Case No. PGR2018-00019 filed for U.S. Pat. No. 9,723,117 between *Merchsource, LLC* (Petitioner) v. *DDC Technology, LLC*. (Patent Owner), SVVR Meetup, Part 8, Exhibit# 2039, filed on Dec. 18, 2018, 1 pages.
United States Patent and Trademark Office, Before the Patent Trial and Appeal Board, Case No. PGR2018-00019 filed for U.S. Pat. No. 9,723,117 between *Merchsource, LLC* (Petitioner) v. *DDC Technology, LLC*. (Patent Owner), SVVR Meetup, Part 7, Exhibit# 2039, filed on Dec. 18, 2018, 1 pages.
United States Patent and Trademark Office, Before the Patent Trial and Appeal Board, Case No. PGR2018-00019 filed for U.S. Pat. No. 9,723,117 between *Merchsource, LLC* (Petitioner) v. *DDC Technology, LLC*. (Patent Owner), SVVR Meetup, Part 6, Exhibit# 2039, filed on Dec. 18, 2018, 1 pages.
United States Patent and Trademark Office, Before the Patent Trial and Appeal Board, Case No. PGR2018-00019 filed for U.S. Pat. No. 9,723,117 between *Merchsource, LLC* (Petitioner) v. *DDC Technology, LLC*. (Patent Owner), SVVR Meetup, Part 5, Exhibit# 2039, filed on Dec. 18, 2018, 1 pages.
United States Patent and Trademark Office, Before the Patent Trial and Appeal Board, Case No. PGR2018-00019 filed for U.S. Pat. No. 9,723,117 between *Merchsource, LLC* (Petitioner) v. *DDC Technology, LLC*. (Patent Owner), SVVR Meetup, Part 4, Exhibit# 2039, filed on Dec. 18, 2018, 1 pages.
United States Patent and Trademark Office, Before the Patent Trial and Appeal Board, Case No. PGR2018-00019 filed for U.S. Pat. No. 9,723,117 between *Merchsource, LLC* (Petitioner) v. *DDC Technology, LLC*. (Patent Owner), SVVR Meetup, Part 3, Exhibit# 2039, filed on Dec. 18, 2018, 1 pages.

(56) **References Cited**

OTHER PUBLICATIONS

United States Patent and Trademark Office, Before the Patent Trial and Appeal Board, Case No. PGR2018-00019 filed for U.S. Pat. No. 9,723,117 between *Merchsource, LLC* (Petitioner) v. *DDC Technology, LLC.* (Patent Owner), SVVR Meetup, Part 2, Exhibit# 2039, filed on Dec. 18, 2018, 1 pages.
United States Patent and Trademark Office, Before the Patent Trial and Appeal Board, Case No. PGR2018-00019 filed for U.S. Pat. No. 9,723,117 between *Merchsource, LLC* (Petitioner) v. *DDC Technology, LLC.* (Patent Owner), SVVR Meetup, Part 1, Exhibit# 2039, tiled on Dec. 18, 2018, 1 pages.
United States Patent and Trademark Office, Before the Patent Trial and Appeal Board, Case No. PGR2018-00019 filed for U.S. Pat. No. 9,723,117 between *Merchsource, LLC* (Petitioner) v. *DDC Technology, LLC.* (Patent Owner), Supplemental Evidence and Declaration of Christopher Butler, Exhibit# 1030, filed on Mar. 18, 2019, 20 pages.
United States Patent and Trademark Office, Before the Patent Trial and Appeal Board, Case No. PGR2018-00019 filed for U.S. Pat. No. 9,723,117 between *Merchsource, LLC* (Petitioner) v. *DDC Technology, LLC.* (Patent Owner), Silicon Valley Virtual Reality Meetup, Exhibit# 2049, filed on Dec. 17, 2018, 7 pages.
United States Patent and Trademark Office, Before the Patent Trial and Appeal Board, Case No. PGR2018-00019 filed for U.S. Pat. No. 9,723,117 between *Merchsource, LLC* (Petitioner) v. *DDC Technology, LLC.* (Patent Owner), Signe Brewster, Why Google Cardboard is Actually a Huge Boost for Virtual Reality "Gigaom (Jun. 28, 2014)", Exhibit# 1007, filed on Jan. 15, 2018, 11 pages.
United States Patent and Trademark Office, Before the Patent Trial and Appeal Board, Case No. PGR2018-00019 filed for U.S. Pat. No. 9,723,117 between *Merchsource, LLC* (Petitioner) v. *DDC Technology, LLC.* (Patent Owner), Signature Page Regan Arts, Exhibit# 2027, filed on Dec. 17, 2018, 1 pages.
United States Patent and Trademark Office, Before the Patent Trial and Appeal Board, Case No. PGR2018-00019 filed for U.S. Pat. No. 9,723,117 between *Merchsource, LLC* (Petitioner) v. *DDC Technology, LLC.* (Patent Owner), Shipping Label, Exhibit# 2024, filed on Dec. 17, 2018, 2 pages.
United States Patent and Trademark Office, Before the Patent Trial and Appeal Board, Case No. PGR2018-00019 filed for U.S. Pat. No. 9,723,117 between *Merchsource, LLC* (Petitioner) v. *DDC Technology, LLC.* (Patent Owner), SFHTML5 Meetup, Part 8, Exhibit# 2040, filed on Dec. 18, 2018, 1 pages.
United States Patent and Trademark Office, Before the Patent Trial and Appeal Board, Case No. PGR2018-00019 filed for U.S. Pat. No. 9,723,117 between *Merchsource, LLC* (Petitioner) v. *DDC Technology, LLC.* (Patent Owner), SFHTML5 Meetup, Part 7, Exhibit# 2040, filed on Dec. 18, 2018, 1 pages.
United States Patent and Trademark Office, Before the Patent Trial and Appeal Board, Case No. PGR2018-00019 filed for U.S. Pat. No. 9,723,117 between *Merchsource, LLC* (Petitioner) v. *DDC Technology, LLC.* (Patent Owner), SFHTML5 Meetup, Part 6, Exhibit# 2040, filed on Dec. 18, 2018, 1 pages.
United States Patent and Trademark Office, Before the Patent Trial and Appeal Board, Case No. PGR2018-00019 filed for U.S. Pat. No. 9,723,117 between *Merchsource, LLC* (Petitioner) v. *DDC Technology, LLC.* (Patent Owner), SFHTML5 Meetup, Part 5, Exhibit# 2040, filed on Dec. 18, 2018, 1 pages.
United States Patent and Trademark Office, Before the Patent Trial and Appeal Board, Case No. PGR2018-00019 filed for U.S. Pat. No. 9,723,117 between *Merchsource, LLC* (Petitioner) v. *DDC Technology, LLC.* (Patent Owner), SFHTML5 Meetup, Part 4, Exhibit# 2040, filed on Dec. 18, 2018, 1 pages
United States Patent and Trademark Office, Before the Patent Trial and Appeal Board, Case No. PGR2018-00019 filed for U.S. Pat. No. 9,723,117 between *Merchsource, LLC* (Petitioner) v. *DDC Technology, LLC.* (Patent Owner), SFHTML5 Meetup, Part 3, Exhibit# 2040, filed on Dec. 18, 2018, 1 pages.
United States Patent and Trademark Office, Before the Patent Trial and Appeal Board, Case No. PGR2018-00019 filed for U.S. Pat. No. 9,723,117 between *Merchsource, LLC* (Petitioner) v. *DDC Technology, LLC.* (Patent Owner), SFHTML5 Meetup, Part 2, Exhibit# 2040, filed on Dec. 18, 2018, 1 pages.
United States Patent and Trademark Office, Before the Patent Trial and Appeal Board, Case No. PGR2018-00019 filed for U.S. Pat. No. 9,723,117 between *Merchsource, LLC* (Petitioner) v. *DDC Technology, LLC.* (Patent Owner), Senate Congressional Record, Exhibit# 2036, filed on Dec. 17, 2018, 3 pages.
United States Patent and Trademark Office, Before the Patent Trial and Appeal Board, Case No. PGR2018-00019 filed for U.S. Pat. No. 9,723,117 between *Merchsource, LLC* (Petitioner) v. *DDC Technology, LLC.* (Patent Owner), Second Declaration of Patrick Buckley, Exhibit# 2043, filed on Dec. 17, 2018, 21 pages.
United States Patent and Trademark Office, Before the Patent Trial and Appeal Board, Case No. PGR2018-00019 filed for U.S. Pat. No. 9,723,117 between *Merchsource, LLC* (Petitioner) v. *DDC Technology, LLC.* (Patent Owner), Road to VR, Part 2, Exhibit# 2020, filed on Dec. 17, 2018, 6 pages.
United States Patent and Trademark Office, Before the Patent Trial and Appeal Board, Case No. PGR2018-00019 filed for U.S. Pat. No. 9,723,117 between *Merchsource, LLC* (Petitioner) v. *DDC Technology, LLC.* (Patent Owner), Road to VR, Part 1, Exhibit# 2020, filed on Dec. 17, 2018, 4 pages.
United States Patent and Trademark Office, Before the Patent Trial and Appeal Board, Case No. PGR2018-00019 filed for U.S. Pat. No. 9,723,117 between *Merchsource, LLC* (Petitioner) v. *DDC Technology, LLC.* (Patent Owner), Purchase Order 50K, Exhibit# 2029, filed on Dec. 17, 2018, 2 pages.
United States Patent and Trademark Office, Before the Patent Trial and Appeal Board, Case No. PGR2018-00019 filed for U.S. Pat. No. 9,723,117 between *Merchsource, LLC* (Petitioner) v. *DDC Technology, LLC.* (Patent Owner), Purchase Order 30K, Exhibit# 2030, filed on Dec. 17, 2018, 2 pages.
United States Patent and Trademark Office, Before the Patent Trial and Appeal Board, Case No. PGR2018-00019 filed for U.S. Pat. No. 9,723,117 between *Merchsource, LLC* (Petitioner) v. *DDC Technology, LLC.* (Patent Owner), Photos NYCC, Exhibit# 2031, filed on Dec. 17, 2018, 4 pages.
United States Patent and Trademark Office, Before the Patent Trial and Appeal Board, Case No. PGR2018-00019 filed for U.S. Pat. No. 9,723,117 between *Merchsource, LLC* (Petitioner) v. *DDC Technology, LLC.* (Patent Owner), Photos Engadget Expand, Exhibit# 2032, filed on Dec. 17, 2018, 4 pages.
United States Patent and Trademark Office, Before the Patent Trial and Appeal Board, Case No. PGR2018-00019 filed for U.S. Pat. No. 9,723,117 between *Merchsource, LLC* (Petitioner) v. *DDC Technology, LLC.* (Patent Owner), KTVU Sunday Morning, Part 2, Exhibit# 2033, filed on Dec. 17, 2018, 1 pages.
United States Patent and Trademark Office, Before the Patent Trial and Appeal Board, Case No. PGR2018-00019 filed for U.S. Pat. No. 9,723,117 between *Merchsource, LLC* (Petitioner) v. *DDC Technology, LLC.* (Patent Owner), KTVU Sunday Morning News, Part 1, Exhibit# 2033, filed on Dec. 17, 2018, 1 pages.
United States Patent and Trademark Office, Before the Patent Trial and Appeal Board, Case No. PGR2018-00019 filed for U.S. Pat. No. 9,723,117 between *Merchsource, LLC* (Petitioner) v. *DDC Technology, LLC.* (Patent Owner), Kickstarter Video, Exhibit# 2041, filed on Dec. 18, 2018, 1 pages.
United States Patent and Trademark Office, Before the Patent Trial and Appeal Board, Case No. PGR2018-00019 filed for U.S. Pat. No. 9,723,117 between *Merchsource, LLC* (Petitioner) v. *DDC Technology, LLC.* (Patent Owner), Kickstarter Projects Backed by Cassin, Exhibit# 2017, filed on Dec. 17, 2018, 2 pages.
United States Patent and Trademark Office, Before the Patent Trial and Appeal Board, Case No. PGR2018-00019 filed for U.S. Pat. No. 9,723,117 between *Merchsource, LLC* (Petitioner) v. *DDC Technology, LLC.* (Patent Owner), Kickstarter Order, Exhibit# 2023, filed on Dec. 17, 2018, 1 pages.
United States Patent and Trademark Office, Before the Patent Trial and Appeal Board, Case No. PGR2018-00019 filed for U.S. Pat. No. 9,723,117 between *Merchsource, LLC* (Petitioner) v. *DDC Technology, LLC.* (Patent Owner), Internet Archive Gigaom Search—Virtual Reality, Exhibit# 1031, filed on Mar. 18, 2019, 3 pages.

(56) **References Cited**

OTHER PUBLICATIONS

"Hands-On with Google Cardboard Virtual Reality Kit," YouTube Video, <https://www.youtube.com/watch?v=eT9vmpE8WcY>, published on date Jun. 30, 2014, 3 pages.
United States Patent and Trademark Office, Before the Patent Trial and Appeal Board, Case No. PGR2018-00020 filed for U.S. Pat. No. 9,811,184 between *Merchsource, LLC* (Petitioner) v. *Dodocase, Inc.* (Patent Owner), Petitioner Merchsource, LLC's Power of Attorney in Post Grant Review, filed on Jan. 15, 2018, 4 pages.
United States Patent and Trademark Office, Before the Patent Trial and Appeal Board, Case No. PGR2018-00020 filed for U.S. Pat. No. 9,811,184 between *Merchsource, LLC* (Petitioner) v. *Dodocase, Inc.* (Patent Owner), Petition for Post Grant Review, filed on Jan. 15, 2018, 79 pages.
United States Patent and Trademark Office, Before the Patent Trial and Appeal Board, Case No. PGR2018-00020 filed for U.S. Pat. No. 9,811,184 between *Merchsource, LLC* (Petitioner) v. *Dodocase, Inc.* (Patent Owner), Notice of Filing Date Accorded to Petition and Time for Filing Patent Owner Preliminary Response, mailed on Jan. 22, 2018 Before Alexander C. Levy, Trial Paralegal, 5 pages.
United States Patent and Trademark Office, Before the Patent Trial and Appeal Board, Case No. PGR2018-00020 filed for U.S. Pat. No. 9,811,184 between *Merchsource, LLC* (Petitioner) v. *Dodocase, VR, Inc.*,(Patent Owner), Before Kalyan K. Deshpande, Patrick M. Boucher, and Matthew J. McNeill, Administrative Patent Judges, Boucher, Administrative Patent Judge, Order, Additional Discovery 37 C.F.R. §§ 42.5, 42.51(b)(2), Entered on Jan. 25, 2019, 6 pages.
United States Patent and Trademark Office, Before the Patent Trial and Appeal Board, Case No. PGR2018-00020 filed for U.S. Pat. No. 9,811,184 between *Merchsource, LLC* (Petitioner) v. *Dodocase, VR, Inc.* (Patent Owner), Power of Attorney for Dodocase VR, Inc, filed on Oct. 12, 2018, 4 pages.
United States Patent and Trademark Office, Before the Patent Trial and Appeal Board, Case No. PGR2018-00020 filed for U.S. Pat. No. 9,811,184 between *Merchsource, LLC* (Petitioner) v. *Dodocase, VR, Inc.* (Patent Owner), Power of Attorney for Dodocase VR, Inc, filed on Mar. 14, 2018, 2 pages.
United States Patent and Trademark Office, Before the Patent Trial and Appeal Board, Case No. PGR2018-00020 filed for U.S. Pat. No. 9,811,184 between *Merchsource, LLC* (Petitioner) v. *Dodocase, VR, Inc.* (Patent Owner), Power of Attorney for Dodocase VR, Inc, filed on Feb. 4, 2018, 2 pages.
United States Patent and Trademark Office, Before the Patent Trial and Appeal Board, Case No. PGR2018-00020 filed for U.S. Pat. No. 9,811,184 between *Merchsource, LLC* (Petitioner) v. *Dodocase, VR, Inc.* (Patent Owner), Patent Owner's Objections to Evidence Submitted With Petition, filed on Sep. 4, 2018, 8 pages.
United States Patent and Trademark Office, Before the Patent Trial and Appeal Board, Case No. PGR2018-00020 filed for U.S. Pat. No. 9,811,184 between *Merchsource, LLC* (Petitioner) v. *Dodocase, VR, Inc.* (Patent Owner), Patent Owner's Motion for Withdrawal and Substitution of Counsel, filed on Sep. 24, 2018, 4 pages.
United States Patent and Trademark Office, Before the Patent Trial and Appeal Board, Case No. PGR2018-00020 filed for U.S. Pat. No. 9,811,184 between *Merchsource, LLC* (Petitioner) v. *Dodocase, VR, Inc.* (Patent Owner), Dodocase VR, Inc.'s Revised Mandatory Notices Under 37 C.F.R. § 42.8, filed on Oct. 12, 2018, 4 pages.
United States Patent and Trademark Office, Before the Patent Trial and Appeal Board, Case No. PGR2018-00020 filed for U.S. Pat. No. 9,811,184 between *Merchsource, LLC* (Petitioner) v. *Dodocase, VR, Inc.* (Patent Owner), Dodocase VR, Inc.'s Patent Owner Preliminary Response Pursuant to 37 C.F.R. § 42.107(a), filed on May 25, 2018, 37 pages.
United States Patent and Trademark Office, Before the Patent Trial and Appeal Board, Case No. PGR2018-00020 filed for U.S. Pat. No. 9,811,184 between *Merchsource, LLC* (Petitioner) v. *Dodocase, VR, Inc.* (Patent Owner), Before Kalyan K. Deshpande, Patrick M. Boucher, and Matthew J. McNeill, Administrative Patent Judges, Deshpande, Administrative Patent Judge, Scheduling Order, Entered on Aug. 22, 2018, 9 pages.
United States Patent and Trademark Office, Before the Patent Trial and Appeal Board, Case No. PGR2018-00020 filed for U.S. Pat. No. 9,811,184 between *Merchsource, LLC* (Petitioner) v. *Dodocase, VR, Inc.* (Patent Owner), Before Kalyan K. Deshpande, Patrick M. Boucher, and Matthew J. McNeill, Administrative Patent Judges, Deshpande, Administrative Patent Judge, Order, Granting Patent Owner's Motion for Withdrawal and Substitution of Counsel; Modification of Schedule 37 C.F.R. §§ 42.5, 42.10, Entered on Nov. 13, 2018, 7 pages.
United States Patent and Trademark Office, Before the Patent Trial and Appeal Board, Case No. PGR2018-00020 filed for U.S. Pat. No. 9,811,184 between *Merchsource, LLC* (Petitioner) v. *Dodocase, VR, Inc.* (Patent Owner), Before Kalyan K. Deshpande, Patrick M. Boucher, and Matthew J. McNeill, Administrative Patent Judges, Deshpande, Administrative Patent Judge, Order, Granting Patent Owner's Motion for Withdrawal and Substitution of Counsel 37 C.F.R. § 42.10, Entered on Oct. 11, 2018, 4 pages.
United States Patent and Trademark Office, Before the Patent Trial and Appeal Board, Case No. PGR2018-00020 filed for U.S. Pat. No. 9,811,184 between *Merchsource, LLC* (Petitioner) v. *Dodocase, VR, Inc.* (Patent Owner), Before Kalyan K. Deshpande, Patrick M. Boucher, and Matthew J. McNeill, Administrative Patent Judges, Deshpande, Administrative Patent Judge, Decision, Institution of Post-Grant Review 35 U.S.C. § 324(a), filed on Aug. 22, 2018, 20 pages.
United States Patent and Trademark Office, Before the Patent Trial and Appeal Board, Case No. PGR2018-00020 filed for U.S. Pat. No. 9,811,184 between *Merchsource, LLC* (Petitioner) v. *Dodocase, VR, Inc.* (Patent Owner), Before Kalyan K. Deshpande, Patrick M. Boucher, and Matthew J. McNeill, Administrative Patent Judges, Deshpande, Administrative Patent Judge, Conduct of the Proceeding 37 C.F.R. § 42.5, Entered on Sep. 21, 2018, 4 pages.
United States Patent and Trademark Office, Before the Patent Trial and Appeal Board, Case No. PGR2018-00020 filed for U.S. Pat. No. 9,811,184 between *Merchsource, LLC* (Petitioner) v. *Dodocase, VR, Inc.* (Patent Owner), Before Kalyan K. Deshpande, Patrick M. Boucher and Matthew J. McNeill, Administrative Patent Judges, McNeill, Administrative Patent Judge, Order, Conduct of Proceeding 37 C.F.R. § 42.5, Entered on May 1, 2018, 4 pages.
United States Patent and Trademark Office, Before the Patent Trial and Appeal Board, Case No. PGR2018-00020 filed for U.S. Pat. No. 9,811,184 between *Merchsource, LLC* (Petitioner) v. *Dodocase, VR, Inc.* (Patent Owner), Before Kalyan K. Deshpande and Matthew J. McNeill, Administrative Patent Judges, McNeill, Administrative Patent Judge, Order, Conduct of Proceeding 37 C.F.R. § 42.5, Entered on Apr. 13, 2018, 4 pages.
United States Patent and Trademark Office, Before the Patent Trial and Appeal Board, Case No. PGR2018-00020 filed for U.S. Pat. No. 9,811,184 between *Merchsource, LLC* (Petitioner) v. *Dodocase, VR, Inc.* (Patent Owner), Amended Mandatory Notices by Patent Owner Under 37 CFR §42.8(a)(3), filed on Mar. 14, 2018, 3 pages.
United States Patent and Trademark Office, Before the Patent Trial and Appeal Board, Case No. PGR2018-00020 filed for U.S. Pat. No. 9,811,184 between *Merchsource, LLC* (Petitioner) v. *DDC Technology, LLC.* (Patent Owner), YouTube Video Prince Ramteke, Use Google Cardboard Without Magnetometer (Enabling Magnetic Ring Support to Every Device "Youtube (May 10, 2015) Part 3 7:15-end", Exhibit# 1008, filed on Jan. 15, 2018, 1 pages.
United States Patent and Trademark Office, Before the Patent Trial and Appeal Board, Case No. PGR2018-00020 filed for U.S. Pat. No. 9,811,184 between *Merchsource, LLC* (Petitioner) v. *DDC Technology, LLC.* (Patent Owner), YouTube Video Prince Ramteke, Use Google Cardboard Without Magnetometer (Enabling Magnetic Ring Support to Every Device "Youtube (May 10, 2015) Part 2 3:32-7:15", Exhibit# 1008, filed on Jan. 15, 2018, 1 pages.
United States Patent and Trademark Office, Before the Patent Trial and Appeal Board, Case No. PGR2018-00020 filed for U.S. Pat. No. 9,811,184 between *Merchsource, LLC* (Petitioner) v. *DDC Technology, LLC.* (Patent Owner), YouTube Video—GoogleDevelopers, Google I/O 2014—Cardboard: VR for Android "YouTube (Jun. 27, 2014), Exhibit# 1010, filed on Jan. 15, 2018, Part 9—37.47-41.13".

(56) **References Cited**

OTHER PUBLICATIONS

United States Patent and Trademark Office, Before the Patent Trial and Appeal Board, Case No. PGR2018-00020 filed for U.S. Pat. No. 9,811,184 between *Merchsource, LLC* (Petitioner) v. *DDC Technology, LLC*. (Patent Owner), YouTube Video—GoogleDevelopers, Google I/O 2014—Cardboard: VR for Android "YouTube (Jun. 27, 2014), Exhibit# 1010, filed on Jan. 15, 2018, Part 8—32.57-37.47".
United States Patent and Trademark Office, Before the Patent Trial and Appeal Board, Case No. PGR2018-00020 filed for U.S. Pat. No. 9,811,184 between *Merchsource, LLC* (Petitioner) v. *DDC Technology, LLC*. (Patent Owner), YouTube Video—GoogleDevelopers, Google I/O 2014—Cardboard: VR for Android "YouTube (Jun. 27, 2014), Exhibit# 1010, filed on Jan. 15, 2018, Part 7—28:07-32:57".
United States Patent and Trademark Office, Before the Patent Trial and Appeal Board, Case No. PGR2018-00020 filed for U.S. Pat. No. 9,811,184 between *Merchsource, LLC* (Petitioner) v. *DDC Technology, LLC*. (Patent Owner), YouTube Video—GoogleDevelopers, Google I/O 2014—Cardboard: VR for Android "YouTube (Jun. 27, 2014), Exhibit# 1010, filed on Jan. 15, 2018, Part 6—22:59-28:07".
United States Patent and Trademark Office, Before the Patent Trial and Appeal Board, Case No. PGR2018-00020 filed for U.S. Pat. No. 9,811,184 between *Merchsource, LLC* (Petitioner) v. *DDC Technology, LLC*. (Patent Owner), YouTube Video—GoogleDevelopers, Google I/O 2014—Cardboard: VR for Android "YouTube (Jun. 27, 2014), Exhibit# 1010, filed on Jan. 15, 2018, Part 5—18:22-22:59".
United States Patent and Trademark Office, Before the Patent Trial and Appeal Board, Case No. PGR2018-00020 filed for U.S. Pat. No. 9,811,184 between *Merchsource, LLC* (Petitioner) v. *DDC Technology, LLC*. (Patent Owner), YouTube Video—GoogleDevelopers, Google I/O 2014—Cardboard: VR for Android "YouTube (Jun. 27, 2014), Exhibit# 1010, filed on Jan. 15, 2018, Part 4—13:32-18:22".
United States Patent and Trademark Office, Before the Patent Trial and Appeal Board, Case No. PGR2018-00020 filed for U.S. Pat. No. 9,811,184 between *Merchsource, LLC* (Petitioner) v. *DDC Technology, LLC*. (Patent Owner), YouTube Video—GoogleDevelopers, Google I/O 2014—Cardboard: VR for Android "YouTube (Jun. 27, 2014), Exhibit# 1010, filed on Jan. 15, 2018, Part 3—9:10-13:32".
United States Patent and Trademark Office, Before the Patent Trial and Appeal Board, Case No. PGR2018-00020 filed for U.S. Pat. No. 9,811,184 between *Merchsource, LLC* (Petitioner) v. *DDC Technology, LLC*. (Patent Owner), YouTube Video—GoogleDevelopers, Google I/O 2014—Cardboard: VR for Android "YouTube (Jun. 27, 2014), Exhibit# 1010, filed on Jan. 15, 2018, Part 2—4:24-9:10".
United States Patent and Trademark Office, Before the Patent Trial and Appeal Board, Case No. PGR2018-00020 filed for U.S. Pat. No. 9,811,184 between *Merchsource, LLC* (Petitioner) v. *DDC Technology, LLC*. (Patent Owner), YouTube Video—GoogleDevelopers, Google I/O 2014—Cardboard: VR for Android "YouTube (Jun. 27, 2014), Exhibit# 1010, filed on Jan. 15, 2018, Part 10—41.13-end".
United States Patent and Trademark Office, Before the Patent Trial and Appeal Board, Case No. PGR2018-00020 filed for U.S. Pat. No. 9,811,184 between *Merchsource, LLC* (Petitioner) v. *DDC Technology, LLC*. (Patent Owner), YouTube Video—GoogleDevelopers, Google I/O 2014—Cardboard: VR for Android "YouTube (Jun. 27, 2014), Exhibit# 1010, filed on Jan. 15, 2018, Part 1—0:00-4:24".
United States Patent and Trademark Office, Before the Patent Trial and Appeal Board, Case No. PGR2018-00020 filed for U.S. Pat. No. 9,811,184 between *Merchsource, LLC* (Petitioner) v. *DDC Technology, LLC*. (Patent Owner), YouTube Objections to Subpoena and Declaration, Exhibit# 1029, filed on Mar. 18, 2019, 14 pages.
United States Patent and Trademark Office, Before the Patent Trial and Appeal Board, Case No. PGR2018-00020 filed for U.S. Pat. No. 9,811,184 between *Merchsource, LLC* (Petitioner) v. *DDC Technology, LLC*. (Patent Owner), Wayback machine—Gigaom, Exhibit# 1012, tiled on Jan. 15, 2018, 9 pages.
United States Patent and Trademark Office, Before the Patent Trial and Appeal Board, Case No. PGR2018-00020 filed for U.S. Pat. No. 9,811,184 between *Merchsource, LLC* (Petitioner) v. *DDC Technology, LLC*. (Patent Owner), Wayback machine—Gigaom comment feed, Exhibit# 1013, filed on Jan. 15, 2018, 1 pages.
United States Patent and Trademark Office, Before the Patent Trial and Appeal Board, Case No. PGR2018-00020 filed for U.S. Pat. No. 9,811,184 between *Merchsource, LLC* (Petitioner) v. *DDC Technology, LLC*. (Patent Owner), Virtual Reality for Beginners Guide Pages, Exhibit# 2022, filed on Dec. 17, 2018, 10 pages.
United States Patent and Trademark Office, Before the Patent Trial and Appeal Board, Case No. PGR2018-00020 filed for U.S. Pat. No. 9,811,184 between *Merchsource, LLC* (Petitioner) v. *DDC Technology, LLC*. (Patent Owner), USPTO FTF Comprehensive Training, Exhibit# 2035, filed on Dec. 17, 2018, 82 pages.
United States Patent and Trademark Office, Before the Patent Trial and Appeal Board, Case No. PGR2018-00020 filed for U.S. Pat. No. 9,811,184 between *Merchsource, LLC* (Petitioner) v. *DDC Technology, LLC*. (Patent Owner), US Publication No. 2013/0249870—Slaby, Exhibit# 1021, filed on Jan. 15, 2018, 24 pages.
United States Patent and Trademark Office, Before the Patent Trial and Appeal Board, Case No. PGR2018-00020 filed for U.S. Pat. No. 9,811,184 between *Merchsource, LLC* (Petitioner) v. *DDC Technology, LLC*. (Patent Owner), US Publication No. 2013/0002606—Mann, Exhibit# 1020, filed on Jan. 15, 2018, 20 pages.
United States Patent and Trademark Office, Before the Patent Trial and Appeal Board, Case No. PGR2018-00020 filed for U.S. Pat. No. 9,811,184 between *Merchsource, LLC* (Petitioner) v. *DDC Technology, LLC*. (Patent Owner), US Publication No. 2012/0146957—Dunagan, Exhibit# 1019, filed on Jan. 15, 2018, 8 pages.
United States Patent and Trademark Office, Before the Patent Trial and Appeal Board, Case No. PGR2018-00020 filed for U.S. Pat. No. 9,811,184 between *Merchsource, LLC* (Petitioner) v. *DDC Technology, LLC*. (Patent Owner), US Publication No. 2012/0139879—Kim, Exhibit# 1018, filed on Jan. 15, 2018, 9 pages.
United States Patent and Trademark Office, Before the Patent Trial and Appeal Board, Case No. PGR2018-00020 filed for U.S. Pat. No. 9,811,184 between *Merchsource, LLC* (Petitioner) v. *DDC Technology, LLC*. (Patent Owner), US Publication No. 2012/0128995—Leto, Exhibit# 1017, filed on Jan. 15, 2018, 19 pages.
United States Patent and Trademark Office, Before the Patent Trial and Appeal Board, Case No. PGR2018-00020 filed for U.S. Pat. No. 9,811,184 between *Merchsource, LLC* (Petitioner) v. *DDC Technology, LLC*. (Patent Owner), US Publication No. 2011/0164000—Pance, Exhibit# 1016, filed on Jan. 15, 2018, 12 pages.
United States Patent and Trademark Office, Before the Patent Trial and Appeal Board, Case No. PGR2018-00020 filed for U.S. Pat. No. 9,811,184 between *Merchsource, LLC* (Petitioner) v. *DDC Technology, LLC*. (Patent Owner), US Publication No. 2011/0162894—Weber, Exhibit# 1015, filed on Jan. 15, 2018, 12 pages.
United States Patent and Trademark Office, Before the Patent Trial and Appeal Board, Case No. PGR2018-00020 filed for U.S. Pat. No. 9,811,184 between *Merchsource, LLC* (Petitioner) v. *DDC Technology, LLC*. (Patent Owner), US Publication No. 2010/0309130—Zhao, Exhibit# 1033, filed on Mar. 18, 2019, 8 pages.
United States Patent and Trademark Office, Before the Patent Trial and Appeal Board, Case No. PGR2018-00020 filed for U.S. Pat. No. 9,811,184 between *Merchsource, LLC* (Petitioner) v. *DDC Technology, LLC*. (Patent Owner), U.S. Appl. No. 62/161,857, Exhibit# 1006, filed on Jan. 15, 2018, 49 pages.
United States Patent and Trademark Office, Before the Patent Trial and Appeal Board, Case No. PGR2018-00020 filed for U.S. Pat. No. 9,811,184 between *Merchsource, LLC* (Petitioner) v. *DDC Technology, LLC*. (Patent Owner), U.S. Appl. No. 62/025,376, Exhibit# 1005, filed on Jan. 15, 2018, 24 pages.
United States Patent and Trademark Office, Before the Patent Trial and Appeal Board, Case No. PGR2018-00020 filed for U.S. Pat. No. 9,811,184 between *Merchsource, LLC* (Petitioner) v. *DDC Technology, LLC*. (Patent Owner), US Patent Publication No. 2013/0141360—Compton, Exhibit# 1009, filed on Jan. 15, 2018, 17 pages.
United States Patent and Trademark Office, Before the Patent Trial and Appeal Board, Case No. PGR2018-00020 filed for U.S. Pat. No. 9,811,184 between *Merchsource, LLC* (Petitioner) v. *DDC Technology, LLC*. (Patent Owner), U.S. Pat. No. 9,811,184, Exhibit# 1001, filed on Jan. 15, 2018, 19 pages.

(56) **References Cited**

OTHER PUBLICATIONS

United States Patent and Trademark Office, Before the Patent Trial and Appeal Board, Case No. PGR2018-00020 filed for U.S. Pat. No. 9,811,184 between *Merchsource, LLC* (Petitioner) v. *DDC Technology, LLC*. (Patent Owner), U.S. Pat. No. 9,811,184 File History, Exhibit# 1004, filed on Jan. 15, 2018, 135 pages.
Exhibit 2054, "HTML <a> tag," w3schools.com, <https://www.w3schools.com/tags/tag_a.asp>, (last visited Mar. 25, 2019), 10 pages.
Exhibit 2059, "Second Declaration of Aakash Parekh," 2 pages.
USPTO, Before the PTAB, Case No. PGR2018-00019 (U.S. Pat. No. 9,723,117) *Merchsource, LLC* v. *DDC Technology, LLC*, Patent Owner's Reply to Petitioners' Opposition to Motion to Amend, filed on Mar. 25, 2019, 22 pages.
USPTO, Before the PTAB, Case No. PGR2018-00020 (U.S. Pat. No. 9,811,184) *Merchsource, LLC* v. *DDC Technology, LLC*, Patent Owner's Reply to Petitioners' Opposition to Motion to Amend, filed on Mar. 25, 2019, 22 pages.
USPTO, Before the PTAB, Case No. PGR2018-00019 (U.S. Pat. No. 9,723,117) *Merchsource, LLC* v. *DDC Technology, LLC*, Patent Owner's Sur-Reply to Petitioner's Reply, filed on Mar. 25, 2019, 32 pages.
USPTO, Before the PTAB, Case No. PGR2018-00020 (U.S. Pat. No. 9,811,184) *Merchsource, LLC* v. *DDC Technology, LLC*, Patent Owner's Sur-Reply to Petitioner's Reply, filed on Mar. 25, 2019, 32 pages.
USPTO Before the PTAB, Case No. IPR2018-000494 (U.S. Pat. No. 9,420,075) *Merchsource, LLC* v. *DDC Technology, LLC*, Patent Owner's Sur-Reply to Petitioner's Reply, filed on Mar. 25, 2019, 34 pages.
USPTO, Before the PTAB, Case No. IPR2018-000494 (U.S. Pat. No. 9,420,075) *Merchsource, LLC* v. *DDC Technology, LLC*, Patent Owner's Objections to Evidence Submitted With Petitioner's Reply, filed on Mar. 25, 2019, 4 pages.
USPTO, Before the PTAB, Case No. PGR2018-00019 (U.S. Pat. No. 9,723,117) *Merchsource, LLC* v. *DDC Technology, LLC*, Patent Owner's Objections to Evidence Submitted With Petitioner's Reply, filed on Mar. 25, 2019, 4 pages.
USPTO, Before the PTAB, Case No. PGR2018-00020 (U.S. Pat. No. 9,811,184) *Merchsource, LLC* v. *DDC Technology, LLC*, Patent Owner's Objections to Evidence Submitted With Petitioner's Reply, filed on Mar. 25, 2019, 4 pages.
Exhibit 2053, HTML Source Code for <https://web.archive.org/web/20140715204143/https://gigaom.com/2014/06/28/why-google-cardboard-is-actually-a-huge-boost-for-virtual-reality/>, (generated Mar. 25, 2019), 57 pages.
Exhibit 2056, "HTML <link> rel Attribute," w3schools.com, <https://www.w3schools.com/tags/att_link_rel.asp>, (last visited Mar. 25, 2019), 7 pages.
Exhibit 2055, "HTML <link> tag," w3schools.com, <https://www.w3schools.com/tags/tag_link.asp>, (last visited Mar. 25, 2019), 9 pages.
Exhibit 2057, "Feeds," WordPress Support, <https://en.support.wordpress.com/feeds/>, (last visited Mar. 25, 2019), 9 pages.

* cited by examiner

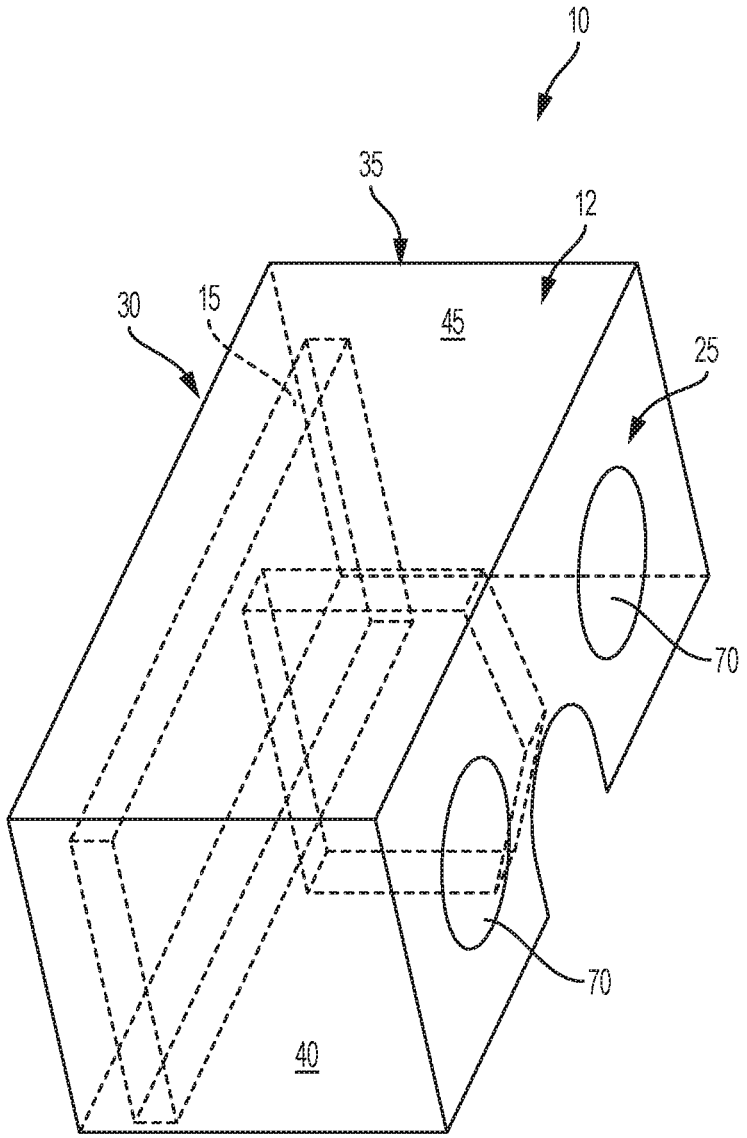

FIG. 1

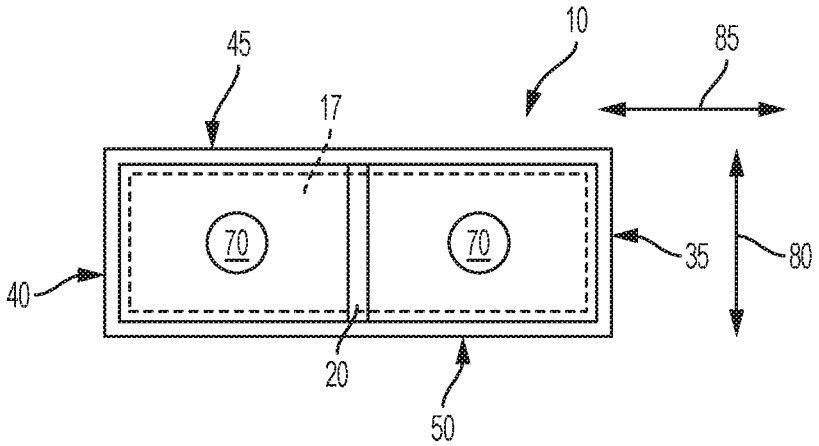

FIG. 2

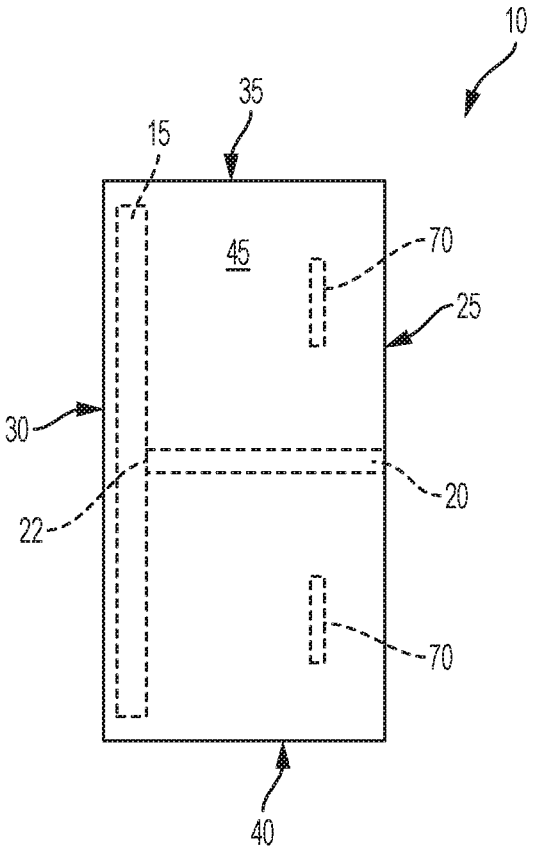

FIG. 3

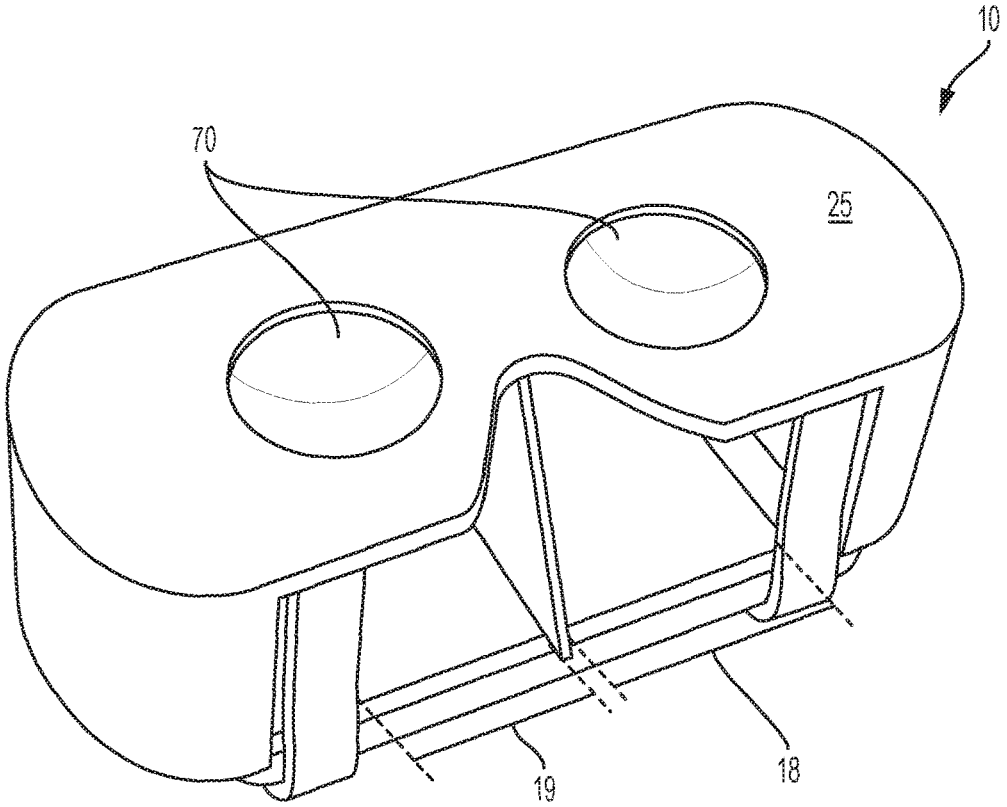

FIG. 4

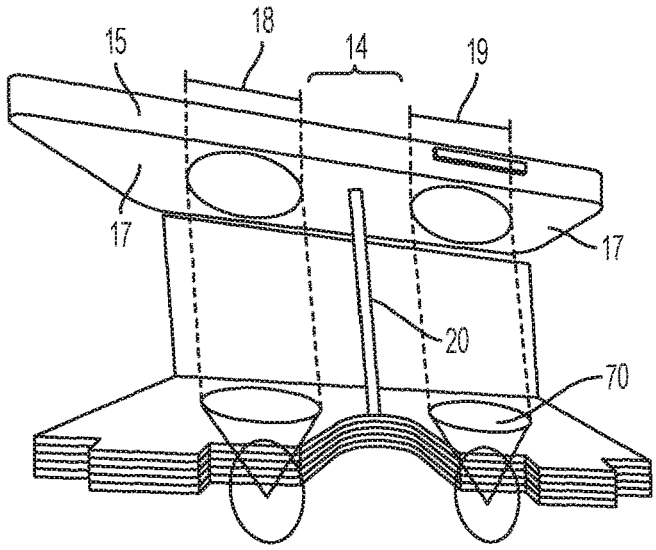

FIG. 5

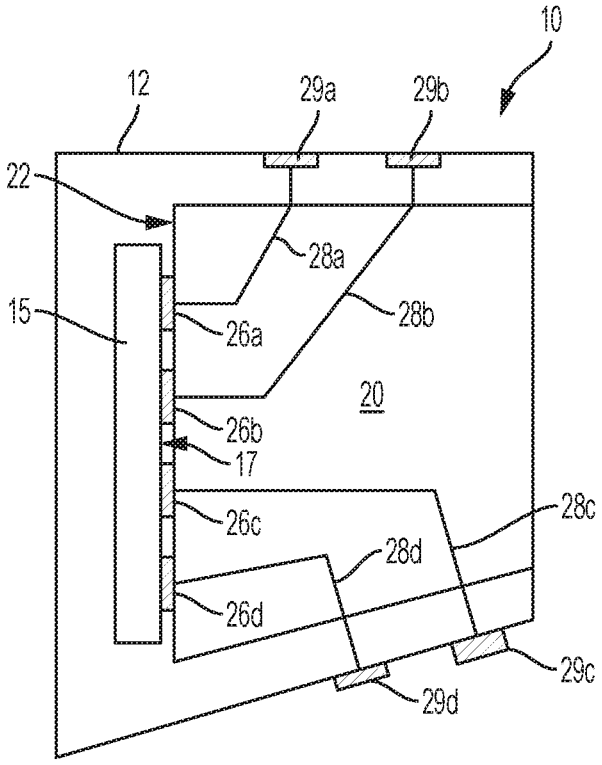
10
12
29a
29b
22
28a
15
26a
28b
20
26b
17
26c
28c
28d
26d
29c
29d

FIG. 6A

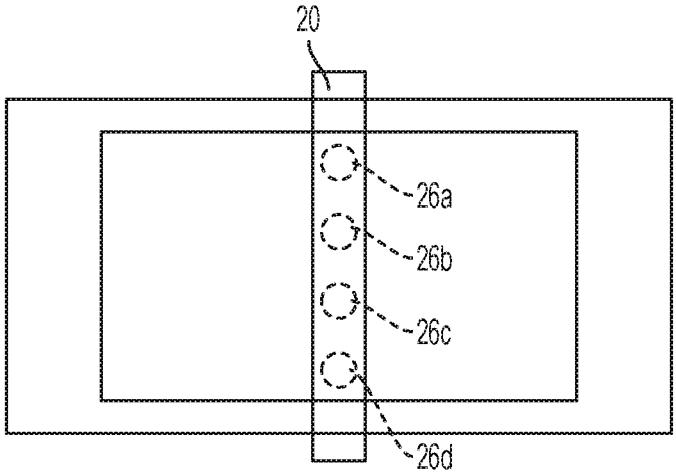
20
26a
26b
26c
26d

FIG. 6B

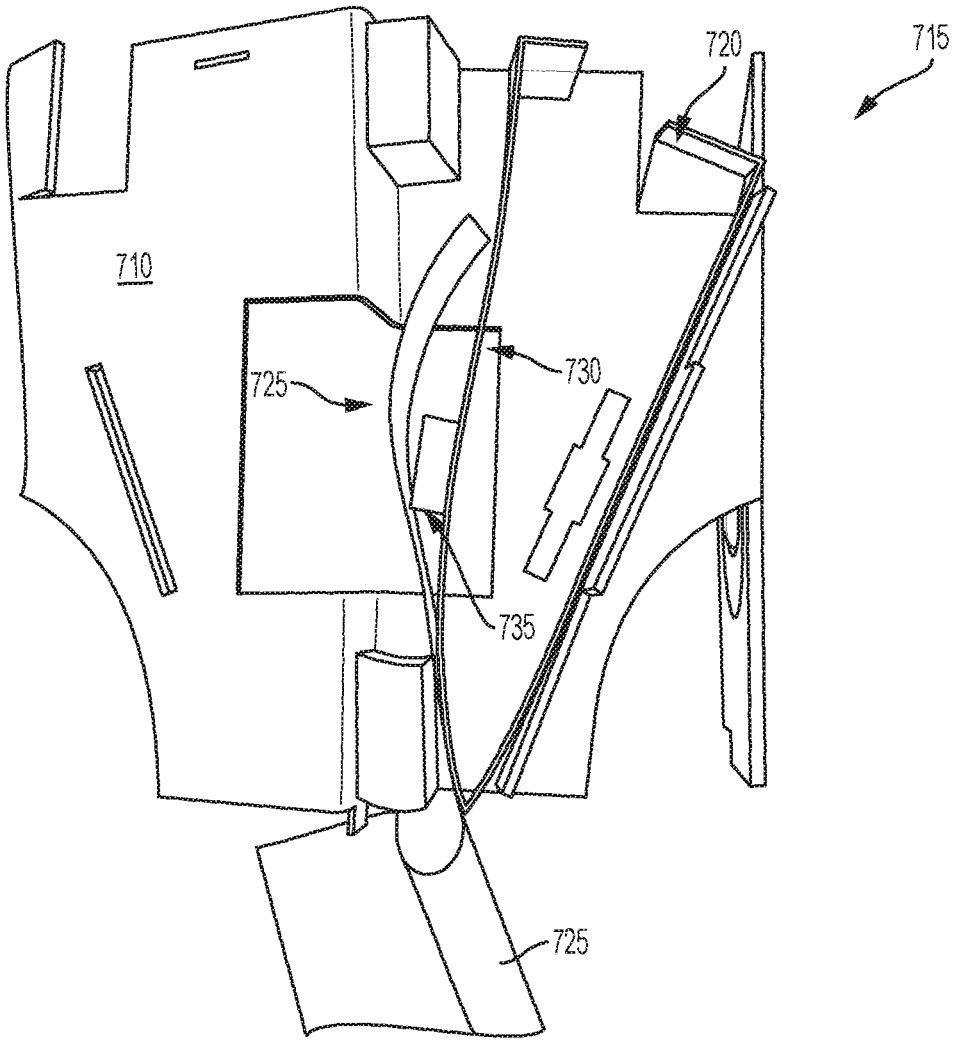

FIG. 7A

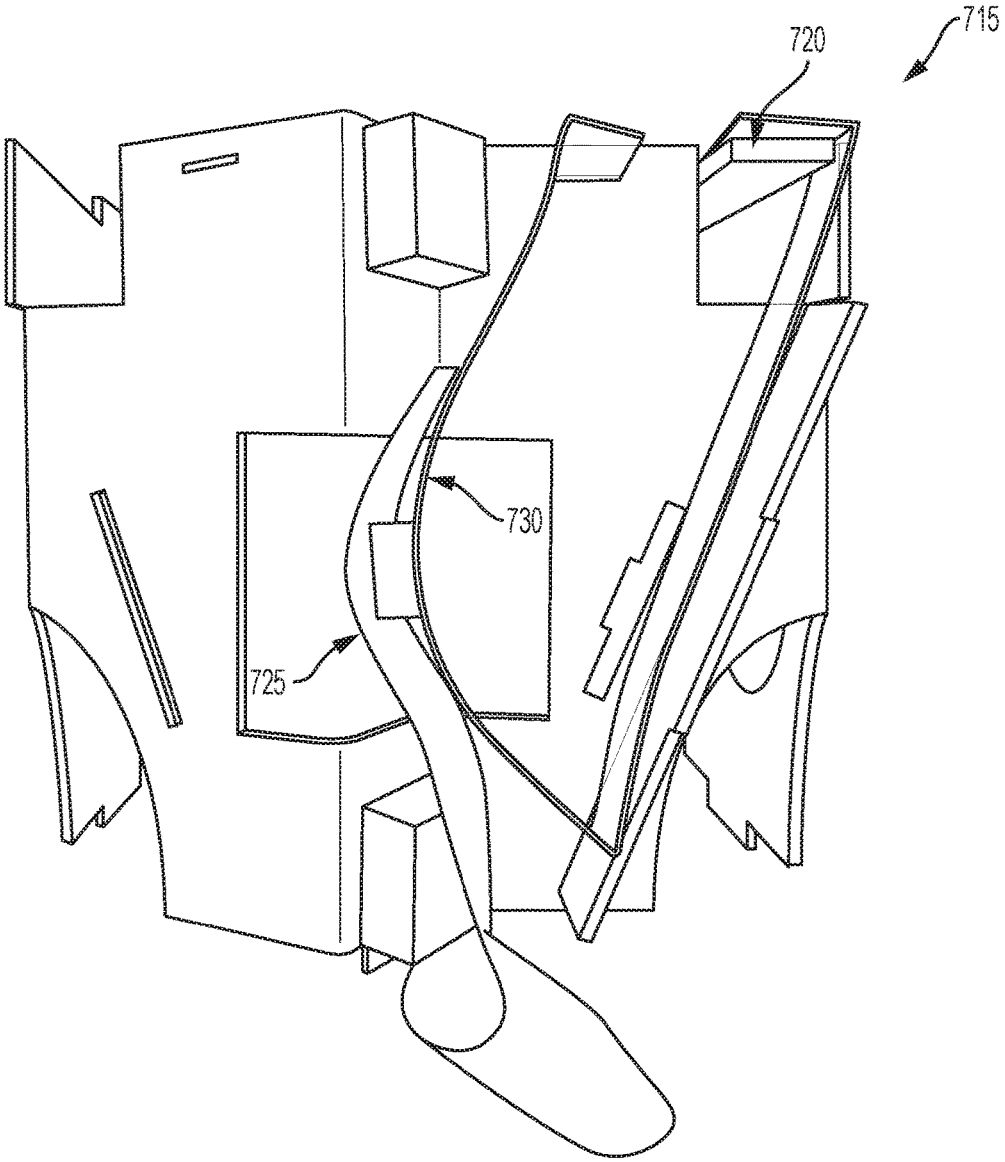

FIG. 7B

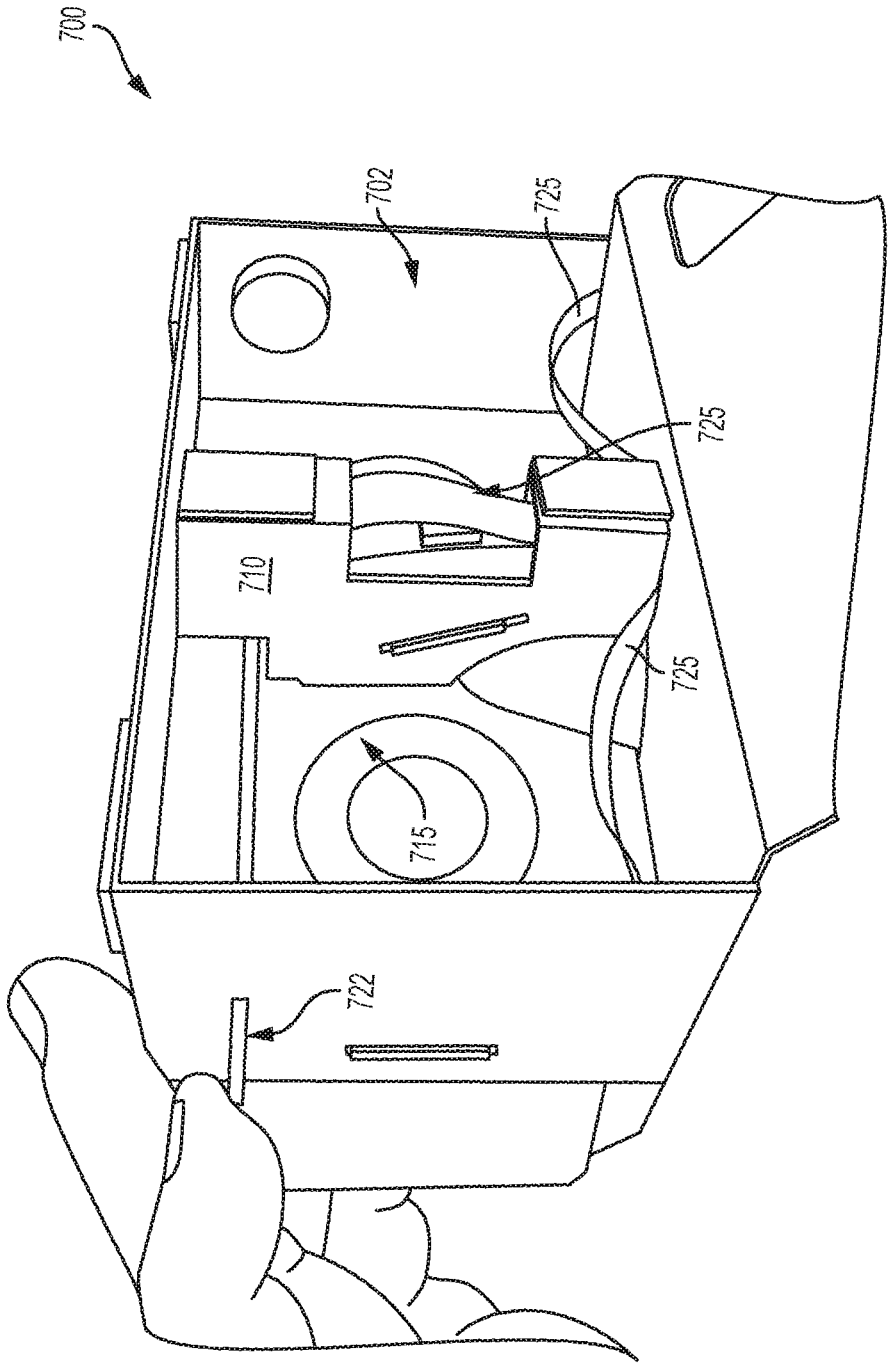

FIG. 7C

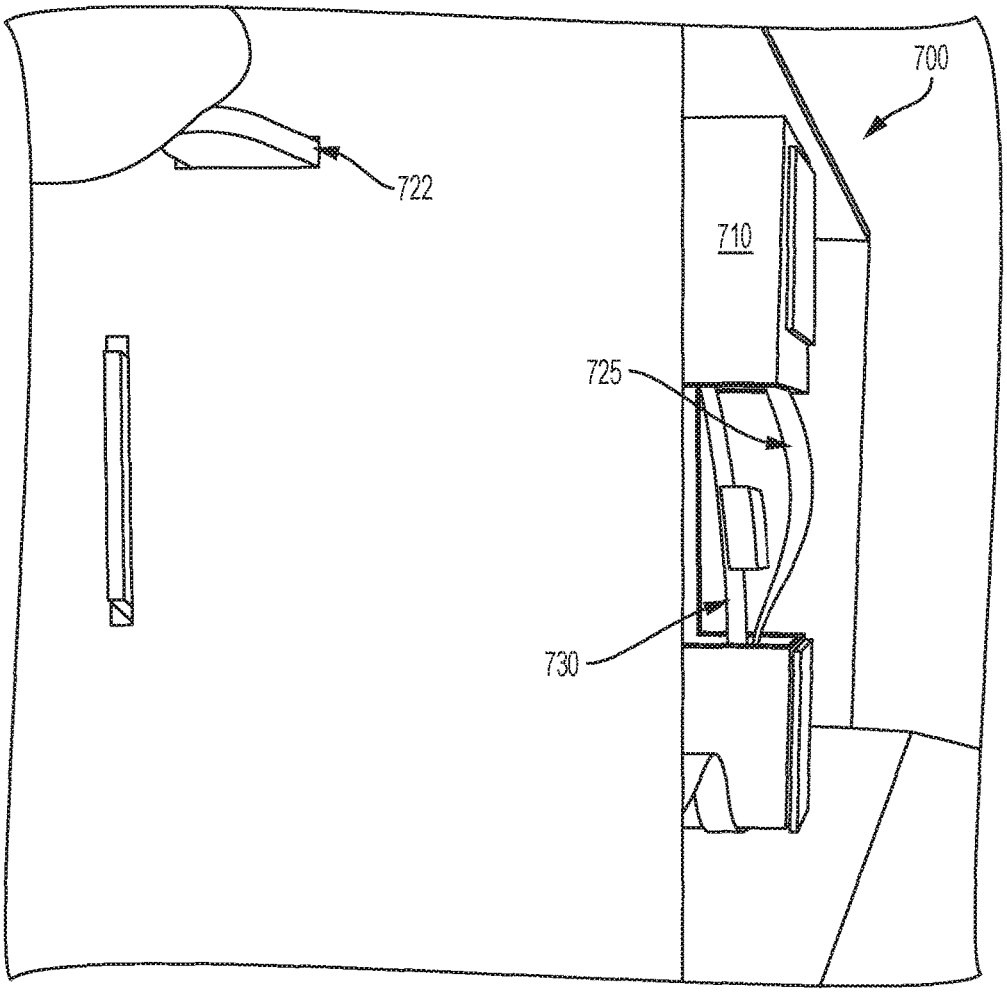

FIG. 7D

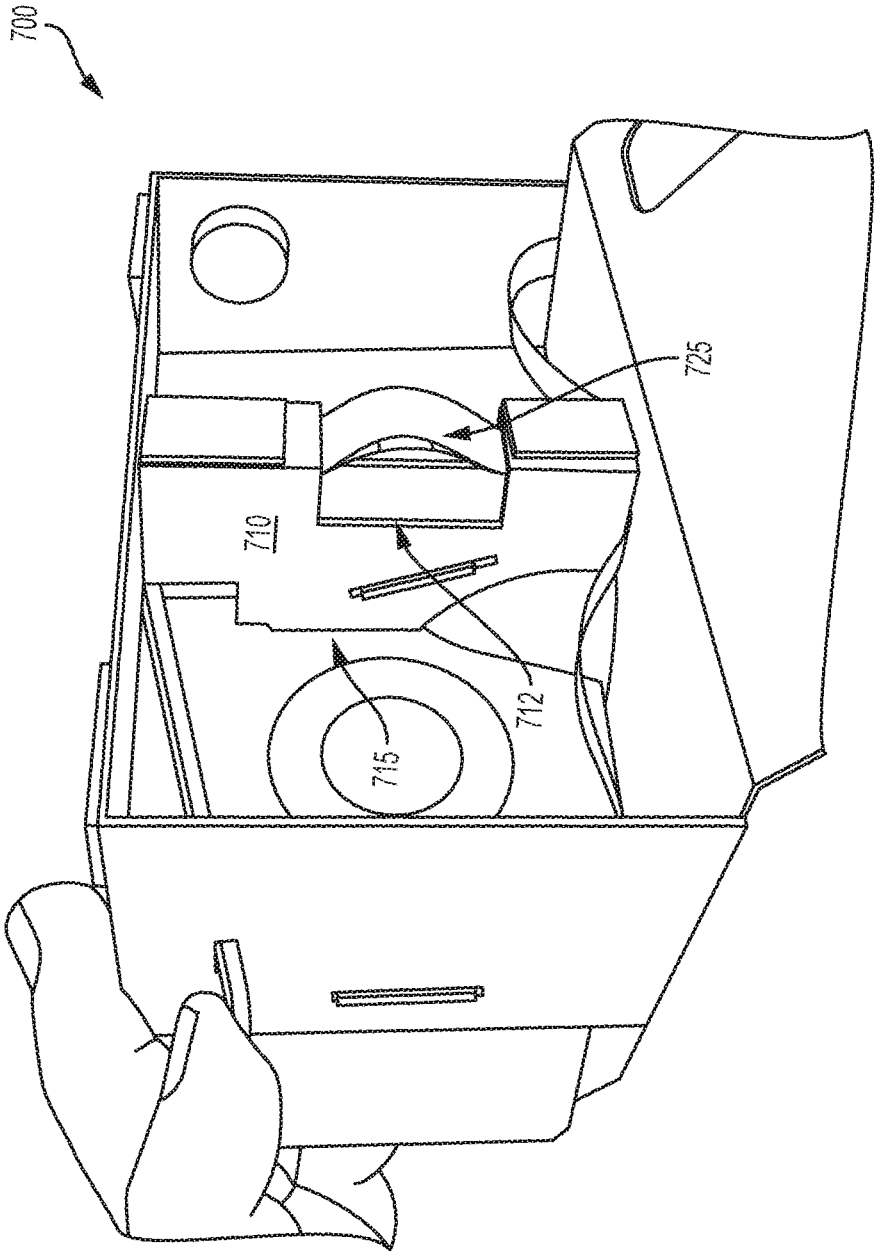

FIG. 7E

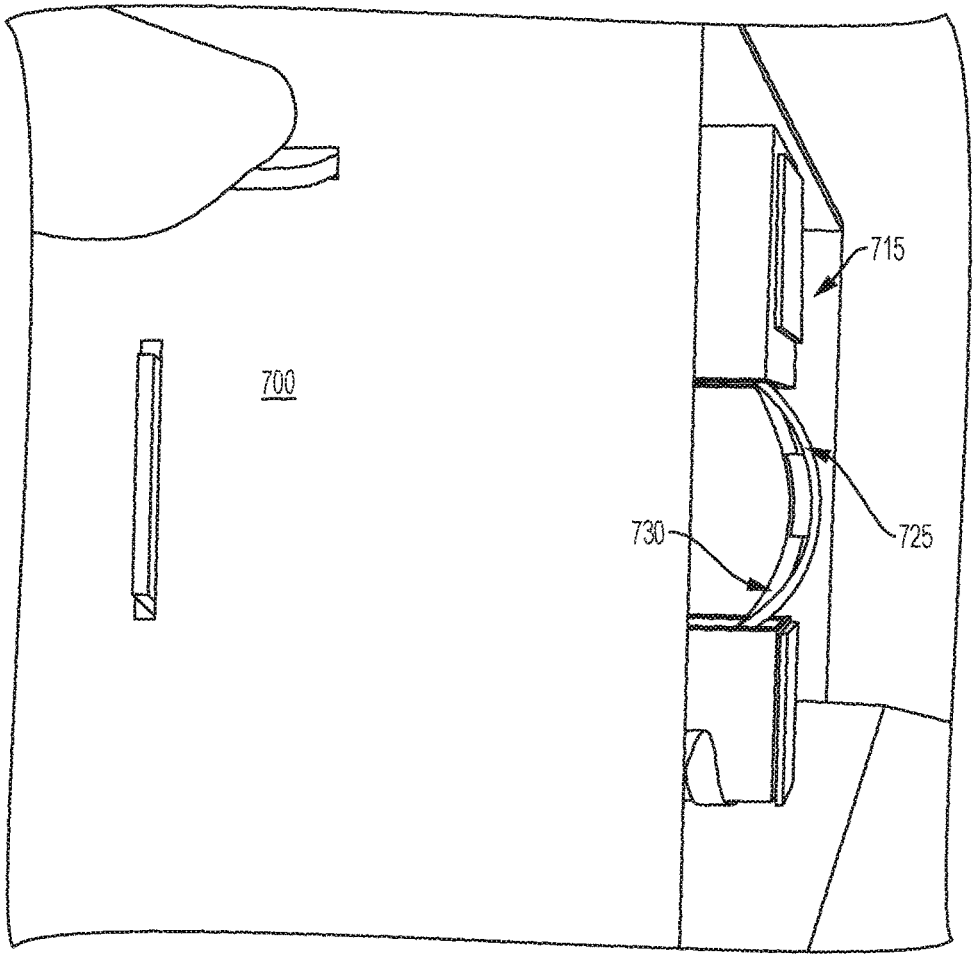

FIG. 7F

VIRTUAL REALITY VIEWER AND INPUT MECHANISM

CROSS-REFERENCE TO RELATED APPLICATIONS

This application is a continuation of U.S. patent application Ser. No. 15/448,785 titled VIRTUAL REALITY VIEWER AND INPUT MECHANISM, which was filed on Mar. 3, 2017, which is a continuation of U.S. patent application Ser. No. 15/209,397, titled VIRTUAL REALITY VIEWER AND INPUT MECHANISM, which was filed on Jul. 13, 2016, which is a continuation of U.S. patent application Ser. No. 14/801,606, which was filed on Jul. 16, 2015, titled VIRTUAL REALITY VIEWER AND INPUT MECHANISM, and issued as U.S. Pat. No. 9,420,075, which claims priority to U.S. Provisional Application No. 62/161,857, which was filed on May 14, 2015, titled SYSTEM AND METHOD FOR VIRTUAL REALITY HEADSET USER INTERACTION THROUGH ELECTROMECHANICAL DEVICE AND TOUCHSCREEN, and to U.S. Provisional Application No. 62/025,376, which was filed on Jul. 16, 2014, titled SYSTEM AND METHOD FOR VR HEADSET USER INTERACTION, which are each hereby incorporated by reference as if set forth in their respective entireties herein.

STATEMENT REGARDING FEDERALLY SPONSORED RESEARCH OR DEVELOPMENT

Not applicable.

THE NAMES OF THE PARTIES TO A JOINT RESEARCH AGREEMENT

Not applicable.

INCORPORATION-BY-REFERENCE OF MATERIAL SUBMITTED ON A COMPACT DISC OR AS A TEXT FILE VIA THE OFFICE ELECTRONIC FILING SYSTEM (EFS-WEB)

Not applicable.

STATEMENT REGARDING PRIOR DISCLOSURES BY THE INVENTOR OR A JOINT INVENTOR

Not applicable.

BACKGROUND OF THE INVENTION

Virtual reality viewers and headsets (collectively referred to as viewers) are becoming an increasingly popular way of viewing digital media, gaming and the like. With the widespread distribution of powerful and capable smartphone devices, many VR viewers are designed to use such smartphone devices as the visual display device, instead of having dedicated displays and electronics.

Typically the viewers have a housing that a user looks into in order to view the video display device contained within the housing. Viewers can be hand-held devices that a user holds up to the users face/eyes, for example, like a user would hold a pair of binoculars. Viewers can also be worn on a user's head, so as to free the user's hands while looking into the viewer.

As would be understood by those in the art, viewers configured to use a smartphone as the visual display device typically receive the smartphone such that the smart phone display is viewable when a user looks into the viewer housing. These viewers also typically include one or more optical lenses within the housing so as to facilitate a three-dimensional viewing experience despite the two-dimensional display of the smartphone. In some instances, the smartphone is completely contained within the housing, in other implementations the smartphone is attached to the housing in a manner such that the display is exposed within the interior of the viewer.

One challenge to utilizing a smartphone in these types of viewers is that the touch sensitive display is concealed within the viewer housing, thereby making it difficult for a user to interact with the touch sensitive display of the device. To overcome this, some existing VR viewers utilize magnets on the exterior of the viewer as input devices, however one drawback is that the locations of magnetic sensors on smartphones vary from device to device and, as such, these viewers with magnetic inputs are only effectively used with a limited number of devices. Other VR viewers utilize built in accelerometers or other such position/orientation sensors within the smartphone to detect movement or the absence of movement and identify user inputs using the movement data. Other VR viewers utilize dedicated input devices, like video game controllers, that connect to the electronic device within the viewer either by a wired plug like connection (e.g., USB or Apple compatible connector), or a wireless connection capabilities. However, such VR viewer configurations typically require complex electronic circuitry and wireless connectivity capabilities in order to facilitate the capture and transfer of user inputs. Moreover, dedicated input controllers can be cumbersome when used with hand-held viewer.

What is needed is a VR viewer having integrated user input devices that is configured for use with a wide variety of conventionally available smartphone devices.

These considerations are addressed by the present invention.

BRIEF SUMMARY OF THE INVENTION

The present invention concerns a virtual reality viewer including an input mechanism that can be used with mobile electronic device having a touchscreen contained within the viewer. According to a first aspect, the virtual reality viewer for use with a mobile electronic device having a touch-screen, comprises: a housing configured to receive a mobile electronic device within an interior of the housing. In addition, the viewer further comprises an input mechanism that is accessible from an exterior of the housing and is moveable within the interior between at least a first position and an extended position, wherein a surface of the input mechanism is configured to contact the touch-screen of the mobile electronic device when in the extended position.

According to another aspect, the virtual reality viewer for use with a mobile electronic device having a touch-screen, comprises: a housing configured to receive a mobile electronic device within an interior of the housing; and an input device including a first portion that is accessible from an exterior of the housing, and a surface within the interior that is configured to contact the touch-screen of the mobile electronic device and transfer a capacitive touch input to the touch-screen in response to a user interaction with the first portion.

These and other aspects, features, steps and advantages can be further appreciated from the accompanying figures and description of certain illustrative embodiments.

BRIEF DESCRIPTION OF THE SEVERAL VIEWS OF THE DRAWINGS

FIG. **1** illustrates an exemplary virtual reality viewer;

FIG. **2** illustrates the viewer of FIG. **1**;

FIG. **3** illustrates the viewer of FIG. **1**;

FIG. **4** illustrates an exemplary virtual reality viewer;

FIG. **5** illustrates an exemplary virtual reality viewer;

FIG. **6**A illustrates an exemplary virtual reality viewer including an input mechanism in accordance with an embodiment of the invention;

FIG. **6**B illustrates the viewer of FIG. **6**A;

FIG. **7**A illustrates an exemplary input mechanism for a virtual reality viewer in accordance with an embodiment of the invention;

FIG. **7**B illustrates the exemplary input mechanism for a virtual reality viewer of FIG. **7**A;

FIG. **7**C illustrates an exemplary virtual reality viewer including the input mechanism of FIG. **7**A;

FIG. **7**D illustrates the exemplary viewer and input mechanism of FIG. **7**C;

FIG. **7**E illustrates the exemplary viewer and input mechanism of FIG. **7**C; and

FIG. **7**F illustrates the exemplary viewer and input mechanism of FIG. **7**C.

DETAILED DESCRIPTION OF THE INVENTION

According to an aspect of the subject application, Virtual reality viewer systems and methods are provided that facilitate the capture of user inputs while using the virtual reality viewer. More specifically, the disclosed systems and methods provide a virtual reality viewer for use with a wide variety of personal electronic devices (e.g., a smartphone) as the visual display device, and having improved tactile user input capabilities.

According to a salient aspect, the disclosed systems and methods facilitate receiving tactile user inputs (e.g., user touches, button depressions etc.) on the exterior of the housing of the viewer and providing the user inputs to the touch sensitive display of the smartphone device that is within the viewer housing. In this manner, the disclosed systems and methods provide a viewer that is configured to be useable with a wide variety of smartphones without requiring input devices that require specifically placed magnetic sensors, wireless or dedicated cable connection to the electronic device **15**.

In one arrangement, the viewer is provided having a housing that encloses a generally hollow interior. As shown in FIG. **1**, which is a perspective view of an exemplary viewer **10** having a conventional construction without an input mechanism. As shown, the viewer comprises a housing **12** that includes a front surface **30**, back surface **25**, top surface **45**, bottom surface **50** (not shown), left surface **40** and right surface **35**.

In some implementations, when in operation, housing **12** will be disposed in the position directly in front of the user's eyes such that the lenses contained in the housing, are in alignment with each of the user's eyes and the display of the electronic device is viewable through the lenses. It should be understood that the housing can be held by the user, or worn by the user such that the back surface of the housing is held against or in proximity to the users face.

The housing **12** is configured to receive an electronic device **15** having a touch sensitive display. The electronic device **15** can be any electronic device configured to visually display information via a display (e.g., LED, Plasma, LCD display) and receive user inputs via a touch sensitive user interface (e.g., a capacitive touch sensitive display), as would be understood by those skilled in the art. For example and without limitation, electronic device **15** can include a smartphone or other such personal electronic device having a touch sensitive display, for example, an iPhone or Android smartphone device and the like that are commercially available.

Preferably the electronic device **15** is received or mounted within the interior of the housing **12** such that the electronic device display **17** is viewable when the user is looking through the housing **12**. By way of further example, the electronic device **15**, can be mounted on the housing such that it defines the back surface of the viewer. It can be appreciated that other configurations for the viewer **10** are envisioned without departing from the scope of the invention.

As shown in FIG. **2**, which is a back view of the viewer (the terminology back side of refers to the side that the user looks into), preferably the housing **12** is configured to receive the electronic device **15** such that the touch sensitive display **17** of the device **15** is centered in a vertical direction **80** and/or a horizontal direction **85**.

As shown in FIGS. **1** and **2**, in some implementations, the housing includes one or more lenses **70** disposed therein arranged to be in alignment with the user's eyes when the user looks into the viewer. Generally, lenses **70** are mounted such that light from the display of the electronic device passes through lenses **70** to the user's eyes. The configuration, construction and placement of a lens or lenses **70** for use in virtual reality viewers are generally known and understood by those skilled in the art.

A view divider **20** can also be disposed within the housing. FIG. **4** is a perspective view of an exemplary configuration of a viewer **10** without a top, bottom and sides and showing the interior space of the viewer including the view divider **20**. FIG. **5** shows a bottom view of the interior of an exemplary viewer **10** including view divider **20** and having the left and right, bottom and front sides removed. Referring to FIG. **5**, the view divider **20** is configured to isolate the field of view of the left eye from the right eye. In other words, the view divider serves to obstruct the right eye from seeing or receiving images displayed by the left portion **19** of the display **17** of the electronic device **15** and the left eye from seeing images displayed by the right portion **18** of the display **17**. It should also be appreciated that the particular width of the left and right portions of the display that are actually viewable by the user can vary depending on the lenses. In some implementations view dividers are not used.

Between the left and right portion of the display **17** is a central portion **14** of the display. The central portion of the display is not viewable by either the left or right eye due to the view divider **20**, and, in addition or alternatively, due to the optical characteristics of the lenses **70**. The width of the central portion **14** can range from the width of the view divider **20** but can be larger depending on the optical characteristics of the lenses **70**. The central portion **14** that is not viewable by either the left or right eye can also vary in shape depending on the optical characteristics of the lenses. For example, it might be rectangular or an hour glass

shape that is wider towards the top and bottom sides of the viewer and narrower in the middle section of the display **17**.

In one arrangement, the viewer **10** is configured to include one or more input devices that are configured to receive user inputs at the exterior of the viewer and provide such inputs directly to the touch sensitive display **17**. The input devices can be configured to be passive and/or active input devices.

Preferably the inputs are provided to the display at the central portion **14** of the display, however one or more of the user inputs can be provided to the electronic device at alternative portions of the display **17** as well. Because the central portion **14** of the display is not viewable by the left or right eye to, by providing inputs at the central portion **14**, the viewer **10** is capable of providing inputs to the electronic device **15** in a manner that does not disturb the field of view of the left or right eye. Moreover, because the device **15** is received within the housing and preferably positioned such that the display **17** portion of the device is generally centered in at least a horizontal direction and often in vertical direction as well, providing inputs in the central portion **14**, for example, where the view divider **20** is proximate to the display **17**, allows the systems and methods disclosed herein to be useable with a wide variety of touch sensitive smartphone devices of various sizes and screen layouts. Moreover, software can be configured universally to these touch points regardless of the shape or size of the device because of the centered location.

An exemplary implementation of a viewer including an input mechanism in accordance with an embodiment of the invention is shown in FIG. **6**A-**6**B, which depict a cross-sectional view and of the exemplary viewer **10**, including the view divider **20** and the electronic device **15** from the side and back perspective respectively. As shown, the viewer includes input devices that include one or more touchscreen inputs (**26***a*-**26***d*). In this particular exemplary configuration, the touchscreen inputs (**26***a*-**26***d*) are disposed on the distal surface **22** of the view divider **20**. Preferably, the electronic device **15** is mounted in a manner such that the touch sensitive display **17** of the device **15**, is proximate to (or is touching) at least a portion of the distal surface **22** of the view divider **20**, such that the display **17** (not shown from this particular perspective) of the device is in physical contact with the surface of the touchscreen input portion of the input mechanism.

As most smartphones have capacitive touch sensitive displays, in an exemplary implementation, the touchscreen inputs (**26***a*-**26***d*) are constructed from a conductive material, for example, a conductive foam or polymer and the like as are used as the tip of a stylus configured for use with a capacitive touch screen. A compressible material will allow the housing to accommodate devices of varying thicknesses and create a capacitive connection between the display and the touchscreen inputs without the screen touching other portions of the surface **22**, for example, to prevent scratching of the screen, provide communicative connection between touchscreen input and the touchscreen without cross-talk and other such considerations.

Preferably, the touchscreen inputs (**26***a*-**26***d*) are electrically coupled to one or more user inputs (**29***a*-**29***d*) that are configured to receive user interactions while using the viewer. Preferably the user inputs (**29***a*-**29***d*) are exposed on the outer surfaces of the housing or positioned on the exterior of the housing **12** such that the user can interact with the user inputs (**29***a*-**29***d*) while using the viewer **10**, although other configurations are envisioned without departing from the scope of the invention. The user inputs are configured to sense/detect or receive the user interactions and transmit/transfer/relay the user interaction to the touch sensitive display via the touch screen inputs (**26***a*-**26***d*). In some implementations, the user inputs relay the user interactions to the touch screen inputs (**26***a*-**26***d*) via input leads (**28***a*-**28***d*), respectively. For example and without limitation, input leads can be conductive wires/leads that electrically couple the user inputs (**29***a*-**29***d*) to touchscreen inputs (**26***a*-**26***d*).

In such an exemplary configuration in which the input device is a passive input device, the user inputs (e.g., **29***a*-**29***d*) are preferably constructed of conductive material, for example, a metalized polymer, conductive polymers, conductive/capacitive inks, carbon based inks or other such inks designed to activate capacitive screens. Accordingly, a user touch of a conductive user input (e.g., **29***a*), via the conductive lead (e.g., **28***a*) and touchscreen input (e.g., **26***a*), will alter the electrical properties of the portion of the display **17** that is in contact with the touchscreen input.

As will be understood by those skilled in the art, the device **15** having a capacitive touch sensitive display **17** can detect the particular location of a change in the electrical property that is caused by the user touch of the user input (e.g., **29***a*). As would be understood by those skilled in the art, based on the particular location of the sensed change, the device **15**, which has a processor executing instructions in the form of code, can interpret that an electrical change sensed at a particular location on the display **17** corresponds to a user interaction with a particular user input and corresponds to a prescribed input instruction, for example, a left mouse click or a right mouse click, or a double click, or as the user moving a cursor, or other such functions. Moreover, it would be understood that other combinations of user interactions sensed by the touch sensitive display can be interpreted as one or more of a number of user inputs such as pushing all 4 buttons at once could represent grabbing a virtual item. The 3 dimensional physical interaction offered by the users hands wrapping around the virtual reality viewer and interacting with the inputs can more easily be translated into 3 dimensional virtual interactions in a more natural way then previous user input mechanisms used today. It should also be understood that the arrangement of the touchscreen inputs the corresponding user inputs and associated functions can be pre-defined in software that is loaded into and executing in the device **15** processor.

Although an exemplary passive input device configuration having 4 distinct user inputs has been disclosed, it can be appreciated that other passive input device configurations are envisioned. For example, an array of user inputs and corresponding touchscreen inputs can be provided. It should also be understood that other active input device configurations can also be implemented in accordance with the disclosed embodiments without departing from the scope of the invention.

Although FIG. **6**A shows the user inputs positioned on the top and bottom surfaces of the housing **12** and also shows that the leads run through the view divider **20** and through the top and bottom surfaces of the housing to corresponding user inputs, it can be appreciated that the leads can run through any portions of the housing. It can be further appreciated that any number of the user inputs (**29***a*-**29***d*) can be located on any portion of the housing and in any orientation or configuration. Moreover, it can be further appreciated that any number of touchscreen inputs (e.g., **26***a*-**26***d*) can be located on the distal end **22** and in any orientation or configuration.

Moreover, although the exemplary configuration provides the user inputs to the screen **17** at the central portion **14** of

the display **17** via the view divider **20**, other configurations are possible. For example, the viewer can provide such touchscreen inputs (e.g., **26***a*-**26***d*) on a surface that abuts one or more other portions the display **17**.

In accordance with the disclosed embodiments of the invention, the exemplary viewers can be configured to allow the user to mechanically induce an electrical/capacitive touch event on the touchscreen. Further to the foregoing exemplary embodiments of the invention, additional exemplary configurations of a viewer having an input mechanism, which is also referred to as the user input assembly, configured to induce a capacitive touch event that is detectable by a touchscreen based on mutual-capacitance are further described herein. It can be appreciated that the exemplary implementation described herein can be adapted to mechanically induce input events on a variety of types of touchscreens (e.g., resistive touchscreen events, touch events). Additional exemplary configurations of the viewer in accordance with the disclosed embodiments are further described herein in relation to FIGS. **7**A-**7**F.

FIG. **7**C depicts a perspective view of a viewer **700** assembled and having a front side open showing the generally hollow interior of the viewer. Also shown is an input mechanism **715**. The input mechanism is disposed within the interior **702** of the housing of the viewer **700**. Moreover, at least a portion of the input mechanism is also accessible from the exterior of the viewer such that a user can interact with the input mechanism and cause the portion of the input mechanism contained within the housing to generate a touch input on the touch interface. More specifically, the input mechanism is moveable within the interior between at least a first position (also referred to as an unactuated state), in which a portion of the input mechanism is retracted so as to not contact a touchscreen of the mobile device, and an extended position (also referred to as the actuated state) in which a surface of the input mechanism contacts the touchscreen of the mobile electronic. As shown, at least a portion of the input mechanism is centrally located within the housing and defines at least a portion of a view divider **710**. It should be appreciated that the housing and or one or more portions of the input mechanism further described herein can be comprised of a variety of materials such as plastics, metals, composites, woods and other heavy paper-like materials (e.g., cardboard) and or other such natural and synthetic materials.

FIG. **7** A depicts the view divider **710** with one side of the view divider folded back so as to expose a portion of the user input mechanism **715** disposed within the interior of the viewer **700**. The diagram also shows the user input mechanism **715** in an unactuated state.

As shown, FIG. **7**A depicts a distal end **720** of a user input portion of the user input mechanism, which in this exemplary implementation is a lever. The proximal end (not shown) of the lever is accessible to a user from outside the viewer when assembled. The diagram depicts the input assembly **715** in an unactuated state. Also shown is an electrical shield **725**. The electric shield is arranged such that at least a portion of the electric shield is configured to contact the touch-screen of the mobile electronic device when the input mechanism is in the extended position. The electrical shield is a material configured to, when brought in proximity to and/or touches the touchscreen, induce a touch event that is electrically detectable by the touchscreen/device. In some implementations, the electrical shield material can be a metallized textile/fabric or films, e.g., polymer film coated with a thin layer of metal, for example PET (Polyethylene terephthalate) films and Mylar (BoPET Biaxially-oriented polyethylene terephthalate). Such metalized materials are commonly used in anti-static bags. Moreover, the electrical shield can be comprised of other metallic conductors, non-metallic conductors, metallized fabrics, metallized polymers, conductive polymers, conductive fabrics, flexographic inks, rigid flex printed circuit board (PCB) and the like. As would be understood by those skilled in the art, such materials have electrical properties that, when a surface of the material is brought in proximity to a touchscreen and/or touches a touchscreen, can affect the electrical properties detected at that location by the touchscreen device. Other materials having the requisite electrical properties can also be used, for example, inks or pastes with carbon such as black flexographic inks having capacitive touch properties that are printed on substrates. Moreover, it can be appreciated that a combination of materials can be used to provide a surface of the input mechanism that is configured to induce a detectable touch input when the surface is touched to the touchscreen. For example, the electric shield can include a conductive polymer arranged to selectively contact the touchscreen and that is electrically coupled to a metallized fabric or conductive ink applied to a surface of the housing and/or input mechanism.

In some implementations, the electric shield is configured (e.g., sized and/or positioned) so as to have capacitive properties sufficient to be detected by a capacitive touchscreen when the input mechanism is in the extended position and in the absence of human contact with the electric shield. However, it can also be appreciated that, in some implementations, the electric shield can be electrically coupled to the portion of the input mechanism that is interacted with by the user such that electrical properties of the user's body can be utilized to induce the touch input.

Also shown is a coupling **730** that is configured to move the input mechanism towards the touchscreen when the lever is actuated. The coupling is a linkage that couples the portion of the input mechanism that is accessible to the user from the exterior (e.g., the proximal end of the lever) to the surface of the input mechanism configured to touch the touchscreen and induce a touch input. The coupling mechanically translates user actuation of the portion of the input mechanism from the exterior of the housing into movement of the input mechanism within the interior of the housing and causing a surface of the input mechanism to touch the touchscreen. For example, in the particular implementation shown in FIGS. **7**A-**7**F, actuation of the lever causes the coupling to deform and extend in a direction towards the touchscreen, which in tum moves a portion of the electrical shield towards the touchscreen. Furthermore, as shown in FIG. **7**A the coupling can be coupled to the housing. As can be appreciated, coupling one or more portions of the input mechanism to the housing can serve to support the input mechanism as well as guide the movement of the input mechanism during user actuation.

The coupling can be comprised of one or more flexible materials such as plastics, metals, composites, woods and other heavy paper-like materials (e.g., cardboard) and or other such natural and synthetic materials. A linkage or coupling that is flexible can be beneficial in that the material memory causes the coupling to return to a resting state when pressure is released from the lever which automatically pulls the input mechanism away from the touchscreen. However, alternative methods for automatically retracting the contact surface of the input mechanism can be similarly implemented without departing from the scope of the invention.

Although a particular exemplary linkage configuration is described in relation to FIGS. **7**A-**7**F, it can be appreciated

that other linkage configurations can be implemented without departing from the scope of the invention. It can also be appreciated that, although the lever, coupling and metallic shield have been described as individual components, the subject invention is not so limited as one or more of the foregoing components can be joined or integrally formed as single unit. Similarly, it can also be appreciated that one or more of the components of the input mechanism can be joined to the housing or integrally formed with the housing m a permanent or temporary fashion using any conventional manufacturing techniques.

In some implementations, a compressible pad **735**, for example, a foam or foam-like material can be disposed between the flexible coupling and the electric shield. The pad can be placed between the flexible coupling and the electrical shield **725** in at least the location where the coupling contacts the metallic shield when extended (e.g., the back side of the electrical shield where the front side of the shield material contacts the touchscreen when extended). It can be appreciated that the electrical shield can be attached to the foam material or unattached. It can also be appreciated that the pad can be coupled to the coupling either directly or indirectly by one or more intermediate structures that comprise the input mechanism. The pad is used to create a sufficiently sized contact surface between the front side of the shield material and the touchscreen so as to register a touch input event on the screen (e.g., to simulate the size and shape of a finger). The pad also helps the surface of the input mechanism configured to touch the touchscreen (i.e., the shield material) conform to the touchscreen surface when the input mechanism is in the extended position/actuated state.

It can be appreciated that various sizes and shapes of the pad can be used to induce a sufficient sized contact surf ace. It can also be appreciated that in some implementations the pad can be omitted. It can also be appreciated that the metallic shield and pad may be integrated or combined into a single material such as conductive foam gaskets used in Electromagnetic Interference (EMI) or Radio Frequency Interference (RFI) applications. It can also be appreciated that the pad can be sized and/or shaped such that actuating the input mechanism with greater force causes a greater surf ace area of the electrical shield to be applied to the screen which can be interpreted differently by the device than when a smaller surface area is detected by the touchscreen. This input mechanism configuration can be used to provide a secondary signal for detecting the amplitude of the users input, for example a method for detecting the amount of force the user applied to the input.

A portion of the lever can be attached to or in communication with (i.e., touching) or integrally formed to at least a portion of the coupling. For instance, as shown, the distal end of the lever can be abutting a portion of the coupling such that, when the lever is actuated at a proximal end, movement of the distal end of the lever causes the plastic coupling to buckle and at least a portion of the coupling extends in the direction towards the touchscreen. In addition or alternatively, the coupling can be a structure that is flexibly coupled to one or more portions of the housing such that it moves in a prescribed manner when a lever is moved or a button is pushed by the user.

FIG. **7**A depicts the view divider **710** with one side of the view divider folded back so as to expose the user input assembly **715** disposed within the view divider of the viewer **700**. The diagram also shows the user input assembly **715** in an unactuated state.

FIG. **7**B depicts the view divider **710** with one side of the view divider folded back so as to expose the user input assembly **715** disposed within the view divider of the viewer **700**. The diagram also shows the user input assembly **715** in an actuated state.

FIG. **7**C depicts a perspective view of the viewer **700** assembled and showing the view divider **710** and showing at least a portion of the user input assembly **715** disposed within the interior of the housing **700**. The diagram also shows the user input assembly **715** in an unactuated state. As shown, the user input (lever) includes a proximal end portion **722** that extends through a cut-out in the housing of the viewer **700** and is accordingly accessible to the user from the exterior of the housing. It can be appreciated that alternative configurations in which one or more portions of the lever or other such mechanical actuators or portions of the input mechanism is accessible from the exterior of the viewer are envisioned. For instance, the lever can be contained within the interior of the housing and accessible to the user through a cut-out through an external wall of the housing.

FIG. **7**D depicts a side view of the viewer **700** assembled and showing the view divider **710** and showing at least a portion of the user input assembly **715** disposed within the interior of the viewer housing **700**. The figure also shows the user input assembly **715** in an unactuated state.

FIG. **7**E depicts a perspective view of the viewer **700** assembled and showing the view divider **710** and showing at least a portion of the user input assembly **715** disposed within the interior of the viewer housing **700**. The diagram also shows the user input assembly **715** in an actuated state where the electrical shield is extended out of the cut-out in the view divider.

FIG. **7**F depicts a side view of the viewer **700** assembled and showing the view divider **710** and showing at least a portion of the user input assembly **715** disposed within the interior of the viewer **700**. The diagram also shows the user input assembly **715** in an actuated state where the electrical shield is extended out of the cut-out **712** in the view divider.

When a user device is placed within the viewer, such that the touchscreen is facing the interior of the viewer and near the view divider, actuating the user input assembly by actuating the lever can cause the coupling to flex and therefore cause the electrical shield to extend towards and touch the touchscreen of the user device. In this exemplary implementation, the coupling and shield extend out of a cut-out in the view divider. As a result, the device can detect the change in an electrical property at one or more locations of the screen, which is caused by the electrical shield touching (or approaching) the touch-sensitive display.

Accordingly, it can be appreciated that, what is provided is a virtual reality viewer for use with an electronic touchscreen device comprising a housing for receiving and holding a touchscreen display device within an interior region of the housing. The viewer further comprising an input mechanism that is accessible from an exterior of the housing and is moveable within the interior between at least a first position and an extended position, wherein a surface of the input mechanism is configured to contact the touch-screen of the mobile electronic device when in the extended position. In one particular implementation, the input mechanism comprises a lever having a proximal end that is exposed to the exterior of the housing and a distal end disposed within the housing, whereby the proximal end of the lever is accessible by a user from the exterior of the housing and actuation (e.g., movement) of the lever at the proximal end translates to mechanical movement of the distal end. The viewer further comprising a coupling attached to or in

communication with the distal end of the lever such that, when the lever is actuated at the proximal end, movement of the lever causes at least a portion of the coupling to move toward a back wall of the housing, e.g., extend or move in a direction of the touchscreen. The viewer further comprises an electrical shield, wherein the electrical shield is a material configured to induce a touch event that is electrically detectable by a touchscreen/device when at least a portion of the shield contacts or is in proximity to a touchscreen. In addition, the portion of the electrical shield is positioned between the coupling and the touchscreen such that movement of the coupling advances at least the portion of the electrical shield material toward the touchscreen so as to induce the touch event. Moreover, the viewer can further comprise a compressible pad disposed between the portion of the coupling and the electrical shield, wherein the pad is attached to the coupling and is sized, shaped and has the softness/rigidness to create a sufficiently sized contact point for generating a touchscreen detection event on the touchscreen device. The compressible pad and electrical shield material work to mimic the electrical and physical properties of a human finger so that any form of touch screen technology will register a touch event when the lever mechanism is actuated. As would be understood by those skilled in the art the combination of physical, and electrical properties of this pad electrical shield material can be tuned to work on a variety of touch screen technologies such as capacitive, resistive, or conductive touch screen technologies. As previously noted, in some implementations, one or more components of the exemplary user input assembly can be integrated into or part of the view divider.

According to a salient aspect, the viewer and the exemplary electro-mechanical user input assembly is configured to allow a user to interact with the touch sensitive screen without access to the touch sensitive screen while within the viewer. Moreover, the exemplary viewer and user input assembly can be configured to allow a user to interact with the touch sensitive screen without reliance on the electrical properties of the human body to induce the electrical event. For instance, the metallized film **725** can be sized such that it is suitable for inducing a touch event without requiring user contact therewith. In addition or alternatively, the portion of the metallized film that is configured to touch the screen can be accessible to receiving a user touch. For instance, a portion of the metallized film can be exposed on the lever **722** or otherwise accessible to the user on an external surface.

As would be understood by those skilled in the art, the mobile electronic device, which has a processor executing instructions in the form of code, can detect that electrical property change at the one or more locations and interpret the change as one or more prescribed user interactions. In some implementations, the user interaction can be interpreted as a simple click event. In some implementations, a variety of possible user interactions can be detected as a function of the location of the touch event on the touchscreen (e.g., as caused by different input mechanisms configured to cause touch inputs at respective locations on the touchscreen), the duration of the touch event, the size of the area of the touchscreen registering the touch event, and the like. These detected aspects of the touch event can be interpreted and translated into one or more prescribed input instructions, for example, a left mouse click or a right mouse click, a double click, or as the user moving a cursor, a virtual gesture such as a grab, push, pull, throw, pinch or as a scaled input instruction such as a hold softly or hold firmly or other such functions.

Moreover, user interactions detected by the touch sensitive display can be interpreted in combination with one or more other input devices. More specifically, a user interaction detected can be interpreted in light of other input data received by the user device from other on-board input devices or data sources, for example and without limitation, an accelerometer that detects the orientation and location of the device or a camera or **3*d*** scanner that detects the physical environment of the user or portions of the user's body position. In addition, the housing can also include one or more additional user input devices electrically coupled to the mobile device by a wireless or wired connection, such that inputs via the electro-mechanical input mechanism can be provided to the mobile device in addition to inputs provided using the additional input device. For example, based on the orientation and location of the device and the information being viewed by the user on the device, the device can determine that a user is looking at an interactive virtual icon using the viewer. Paired with the user actuation of the user input mechanism and the detection of a touch input, the device can interpret the combined user input (e.g. accelerometer data and the touch interaction data) as a "mouse click" on that particular virtual icon or as a grab or hold of that virtual item or icon. Another example might be combining the accelerometer data for device position, camera data from the device capturing the user's physical environment, and a touch event from the mechanism described in this invention in a way that allows the user to select a real physical item to scan/import into a virtual or augmented reality interface allowing for the digital manipulation of the physical item or overlaying additional information about the physical item.

It can also be appreciated that the user input mechanism can be adapted to induce user interactions at a variety of different locations or multiple user input assemblies can be provided to facilitate more complex user inputs.

It is to be understood that like numerals in the drawings represent like elements through the several figures, and that not all components and/or steps described and illustrated with reference to the figures are required for all embodiments or arrangements.

The subject matter described above is provided by way of illustration only and should not be construed as limiting. The terminology used herein is for the purpose of describing particular embodiments only and is not intended to be limiting of the invention. As used herein, the singular forms "a", "an" and "the" are intended to include the plural forms as well, unless the context clearly indicates otherwise. It will be further understood that the terms "comprises" and/or "comprising", when used in this specification, specify the presence of stated features, integers, steps, operations, elements, and/or components, but do not preclude the presence or addition of one or more other features, integers, steps, operations, elements, components, and/or groups thereof.

Also, the phraseology and terminology used herein is for the purpose of description and should not be regarded as limiting. The use of "including," "comprising," or "having," "containing," "involving," and variations thereof herein, is meant to encompass the items listed thereafter and equivalents thereof as well as additional items.

The subject matter described above is provided by way of illustration only and should not be construed as limiting. Various modifications and changes can be made to the subject matter described herein without following the example embodiments and applications illustrated and

described, and without departing from the true spirit and scope of the present invention, as set forth in each and any of the following claims.

The invention claimed is:

1. A virtual reality viewer for use with a mobile electronic device having a touchscreen, the viewer comprising:

a first lens and a second lens, wherein the first lens is facing the same direction as the second lens, and wherein the first lens and the second lens are spaced apart in a horizontal direction;

a frame having a first side and a second side opposite the first side, the first side configured to hold the first lens and the second lens, the second side configured to receive the mobile electronic device, wherein the frame is configured to hold the mobile electronic device such that the mobile electronic device is generally centered in a horizontal direction and directly in a user's field of view when looking through the first side of the frame; and

a touchscreen input constructed of material and having a surface such that only a portion of the surface of the touchscreen input is configured to contact a central region of the touchscreen of the mobile electronic device when the touchscreen input is activated.

2. The virtual reality viewer of claim **1**, further comprising a user input that is accessible from an exterior of the frame and is coupled to the touchscreen input.

3. The virtual reality viewer of claim **2**, further comprising a lead that couples the touchscreen input to the user input, wherein a portion of the lead runs through a portion of the enclosure.

4. The virtual reality viewer of claim **2**, wherein the user input is a metal or conductive polymer.

5. The virtual reality viewer of claim **2** wherein said user input is a tactile user input.

6. The virtual reality viewer of claim **2** wherein said tactile input is a depressible button.

7. The virtual reality viewer of claim **2**, further comprising a lead that electrically couples the touchscreen input to a capacitive or electrical charge reservoir.

8. The virtual reality viewer of claim **7**, where the capacitive or electrical charge reservoir is the human body.

9. The virtual reality viewer of claim **7**, where the capacitive or electrical charge reservoir is metal.

10. The virtual reality viewer of claim **7**, where the capacitive or electrical charge reservoir is a battery.

11. The virtual reality viewer of claim **1**, further comprising a second touchscreen input constructed of material such that the touchscreen input may be capacitively coupled with the touchscreen, wherein the second touchscreen input is generally centered between the first lens and the second lens in the horizontal direction and in physical contact with the touchscreen upon receipt of the mobile electronic device.

12. The virtual reality viewer of claim **11**, wherein the material is at least one of the following: a conductive foam or polymer, conductive rubber, metalized plastic, wire mesh fabric, metallic fabric with foam, a carbon based ink, a conductive ink.

13. The virtual reality viewer of claim **11**, wherein the user input is a metal or conductive polymer.

14. The virtual reality viewer of claim **11**, further comprising a lead that couples the touchscreen input to the user input, wherein a portion of the lead runs through a portion of the enclosure.

15. The virtual reality viewer of claim **1**, wherein the touchscreen input is offset upwards in a vertical direction and a second touchscreen input is offset downwards in the vertical direction.

16. The virtual reality viewer of claim **1**, wherein the touchscreen input is offset in the vertical direction.

17. The virtual reality viewer of claim **1**, wherein the first lens and the second lens are configured to facilitate a three-dimensional viewing experience.

18. The virtual reality viewer of claim **1**, wherein the touchscreen input is generally centered between the first lens and the second lens in the horizontal direction.

19. The virtual reality viewer of claim **1**, wherein the frame surrounds the lenses and touchscreen device on at least two sides and has a cut-out, wherein at least a portion of the user input is accessible through the cut-out.

20. The virtual reality viewer of claim **1**, wherein the material is at least one of the following: a conductive foam or polymer, conductive rubber, metalized plastic, wire mesh fabric, metallic fabric with foam, a carbon based ink, a conductive ink, a material capable of carrying a surface charge that activates a capacitive touchscreen, a material capable of activating a capacitive touchscreen.

21. The virtual reality viewer of claim **1**, further comprising at least one user input, that user input being coupled to the touchscreen input and configured to receive interactions from a user.

22. The virtual reality viewer of claim **21** wherein the user input is configured to sense, detect, or receive the user interactions and to transmit, transfer, or relay the user interactions to the touchscreen via the touchscreen input.

23. The virtual reality viewer of claim **21**, the user input being mechanically coupled to the touchscreen input.

24. The virtual reality viewer of claim **21**, the user input being electrically coupled to the touchscreen input.

25. The virtual reality viewer of claim **1**, further comprising a user input that is accessible from an exterior of the enclosure and is coupled to the touchscreen input via one or more intermediate coupling devices.

26. The virtual reality viewer of claim **25**, wherein a touch by a user of the user input is transmitted, transferred, or relayed via at least one of the intermediate coupling devices and the touchscreen input to contact a portion of the touchscreen so as to change one or more electrical properties of the portion of the touchscreen that is in contact with the touchscreen input.

27. The virtual reality viewer of claim **25**, wherein the one or more intermediate coupling devices includes at least one of the following: a spring-loaded rod and wedge mechanism, one or more levers, a flexure joint, and a soft rubber membrane covering the user input.

28. The virtual reality viewer of claim **1**, further comprising a plurality of user inputs, the user inputs corresponding to the touchscreen inputs and a plurality of additional touchscreen inputs.

29. The virtual reality viewer of claim **28**, wherein pushing two or more of the user inputs at the same time is interpreted as grabbing a virtual item displayed on the touchscreen.

30. A virtual reality viewer for use with a mobile electronic device having a touchscreen, the viewer comprising:

a first lens and a second lens, wherein the first lens is facing the same direction as the second lens, and wherein the first lens and the second lens are spaced apart in a horizontal direction;

a frame having a first side and a second side opposite the first side, the first side configured to hold the first lens

and the second lens, the second side configured to receive the mobile electronic device, wherein the frame is configured to hold the mobile electronic device such that the mobile electronic device is generally centered in a horizontal direction and directly in a user's field of view when looking through the first side of the frame;

a user input that is accessible from an exterior of the enclosure and has a first position and a second position; and

a touchscreen input that is coupled to the user input and generally centered between the first lens and the second lens in the horizontal direction, wherein the touchscreen has a surface such that only a portion of the surface of the touchscreen input is configured to contact a central region of the touchscreen when the user input is in the second position.

31. The virtual reality viewer of claim **30**, further comprising:

a second user input that is accessible from an exterior of the enclosure and has a first position and a second position; and

a second touchscreen input that is coupled to the second user input, wherein, upon receipt of the mobile electronic device, the second touchscreen input is capacitively coupled with the touchscreen when the second user input is in the second position.

32. The virtual reality viewer of claim **31**, wherein the touchscreen input is offset upwards in a vertical direction and the second touchscreen input is offset downwards in the vertical direction.

33. The virtual reality viewer of claim **30**, wherein the touchscreen input is offset in a vertical direction.

34. The virtual reality viewer of claim **30**, wherein the frame surrounds the lenses and touchscreen device on at least two sides, and has a cut-out, and wherein at least a portion of the user input is accessible through the cut-out.

35. The virtual reality viewer of claim **30**, wherein the touchscreen input is constructed of a material capable of carrying a surface charge that activates a capacitive touchscreen, or a material capable of activating a capacitive touchscreen.

36. The virtual reality viewer of claim **30**, further comprising a lead that couples the touchscreen input to the user input, wherein a portion of the lead runs through a portion of the frame.

37. The virtual reality viewer of claim **30**, wherein the touchscreen detects the change of location of the touchscreen input, or the change of one or more electrical properties of the touchscreen input when the touchscreen input is activated or in contact with the touchscreen.

38. The virtual reality viewer of claim **30**, wherein said user input is a tactile user input.

39. The virtual reality viewer of claim **38**, wherein said tactile input is a depressible button.

40. The virtual reality viewer of claim **30**, wherein the user input is configured to sense, detect, or receive the user interactions and to transmit, transfer, or relay the user interactions to the touchscreen via the touchscreen input.

* * * * *