PUBLIC VERSION

Trials@uspto.gov
571-272-7822

Paper 76
Date: November 4, 2024

UNITED STATES PATENT AND TRADEMARK OFFICE

---

BEFORE THE PATENT TRIAL AND APPEAL BOARD

---

GOOGLE LLC,
Petitioner,

v.

DDC TECHNOLOGY, LLC,
Patent Owner.

---

IPR2023-00709
Patent 10,528,199 B2

---

Before SHEILA F. McSHANE, MICHAEL T. CYGAN, and JULIET MITCHELL DIRBA, *Administrative Patent Judges*.

DIRBA, *Administrative Patent Judge*.

JUDGMENT
Final Written Decision
Determining Some Challenged Claims Unpatentable
Dismissing Petitioner's Motion to Exclude
*35 U.S.C. § 318(a)*

On November 8, 2023, we instituted an *inter partes* review of claims 1, 2, 4–6, 17–26, 30, 34, 35, and 37–39 of U.S. Patent No. 10,528,199 B2 (Ex. 1001, "the '199 patent"). Paper 31 ("Inst. Dec.").[1] Having considered the full record at trial, and for the reasons explained below, we determine that Petitioner has shown that claims 30, 34, 35, and 37–39 are unpatentable, but has not shown that any of claims 1, 2, 4–6, and 17–26 are unpatentable. In addition, we dismiss Petitioner's Motion to Exclude (Paper 66) as moot.

## I. BACKGROUND

### *A. History of this Proceeding*

On March 29, 2023, Google LLC ("Petitioner") filed a Petition requesting *inter partes* review of claims 1, 2, 4–6, 17–26, 30, 34, 35, and 37–39 of the '199 patent (Paper 2; "Pet."), and Petitioner submitted a declaration from Kurtis P. Keller in support (*see* Ex. 1002). During the preliminary proceeding: DDC Technology, LLC ("Patent Owner") filed a preliminary response (Paper 13, "Prelim. Resp."), which was accompanied by a declaration from Mr. Patrick Buckley, the named inventor of the '199 patent (Ex. 2023); Petitioner filed a pre-institution reply (Paper 15); and Patent Owner filed a pre-institution sur-reply (Paper 20).[2] On that record, we determined that Petitioner had demonstrated a reasonable likelihood that it would prevail in establishing the unpatentability of at least one challenged claim, and we instituted *inter partes* review of all challenged claims on all asserted grounds. Inst. Dec. 43–44.

---

[1] Paper 37 is the public version of the Institution Decision.

[2] Papers 14, 16, and 21 are the public versions of Papers 13, 15, and 20, respectively.

During trial, Patent Owner filed a Response (Paper 47, "PO Resp."), Petitioner filed a Reply (Paper 52, "Pet. Reply"), and Patent Owner filed a Sur-reply (Paper 56, "PO Sur-reply").[3] With its Response, Patent Owner submitted a declaration of Bob Mackey (*see* Ex. 2050), a second declaration from Mr. Buckley (*see* Ex. 2054), and the deposition transcript of Mr. Keller (*see* Ex. 2053). With its Reply, Petitioner submitted the deposition transcript of Mr. Buckley (*see* Ex. 1023).

Petitioner filed a motion to exclude. Paper 66. Patent Owner opposed this motion (Paper 68), and Petitioner filed a reply in support (Paper 70). For the reasons explained in Section III, we dismiss this motion as moot. In addition, the parties filed various motions to seal in this proceeding, which we resolved in Papers 33 and 75.

An oral hearing was held on August 7, 2024, and a transcript of the hearing is included in the record. Paper 74 ("Tr.").

### *B. Related Matters*

The parties state that the '199 patent has been asserted in several district court lawsuits, including *DDC Technology LLC v. Google LLC*, 3:23-cv-01160 (N.D. Cal.) (filed Mar. 15, 2023). Pet. 4–5; Paper 3 (Patent Owner Mandatory Notices), 3–5.

Petitioner also filed challenges to patents related to the '199 patent in IPR2023-00707, IPR2023-00708, IPR2023-00710, and IPR2023-00711. The Board denied institution of *inter partes* review in IPR2023-00710 following a statutory disclaimer by Patent Owner, but instituted review in the other three proceedings.

---

[3] Papers 53 and 57 are the public versions of Papers 52 and 56, respectively.

### *C. The Ground*

We instituted trial on the following ground of unpatentability:

| Claim(s) Challenged | 35 U.S.C.[4] § | Reference(s)/Basis |
|---|---|---|
| 1, 2, 4–6, 17–26, 30, 34, 35, 37–39 | 103 | Kondo,[5] Chu[6] |

### *D. The '199 Patent*

The '199 patent is titled "Virtual Reality Viewer and Input Mechanism." Ex. 1001, code (54). The application that led to this patent was filed on October 5, 2017, claiming priority through continuations to provisional applications filed on July 16, 2014 and May 14, 2015. *Id.* at codes (22), (60), (63).

According to the Specification, many virtual reality ("VR") viewers at the time were configured to use a smartphone as the display device in lieu of a dedicated display. Ex. 1001, 1:54–60. In such a viewer, however, "the touch sensitive display is concealed within the viewer housing, thereby making it difficult for a user to interact with the touch sensitive display of the device." *Id.* at 2:13–16. Some existing viewers solved this problem by using magnets as input devices, or by using dedicated input devices (e.g., video game controllers). *Id.* at 2:17–23, 2:27–36. But these approaches

---

[4] The Leahy-Smith America Invents Act ("AIA"), Pub. L. No. 112-29, 125 Stat. 284, 285–88 (2011), revised 35 U.S.C. § 103 effective March 16, 2013. Because the '199 patent claims priority to applications filed after that date, we refer to the current version of Section 103. However, our analysis would be the same under the pre-AIA version of the statute.

[5] JP 3176588, issued June 28, 2012 (Ex. 1003). Petitioner relies on a certified translation of Kondo, which also appears in Exhibit 1003.

[6] US 2013/0082963 A1, published on April 4, 2013 (Ex. 1004).

were problematic: the former was "only effectively used with a limited number of devices," and the latter required "complex electronic circuitry and wireless connectivity capabilities." *Id.* at 2:22–23, 2:32–33. The '199 patent describes a viewer with an input device that is both integrated into the viewer and that can be used with a variety of smartphone devices. *Id.* at 2:37–39; *see also id.* at 3:35–53.

Figure 1 of the '199 patent (reproduced below) shows an exemplary viewer "having a conventional construction without an input mechanism." Ex. 1001, 3:55–58.

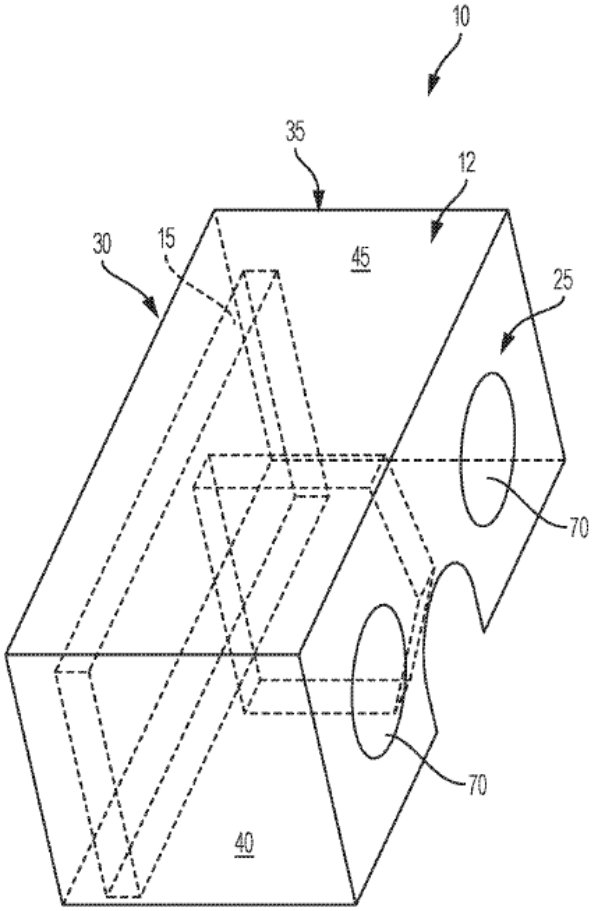


FIG. 1

Figure 1 shows viewer 10, which includes housing 12 into which electronic device 15 (e.g., a smartphone) can be placed such that device 15's display is viewable when the user is looking through lenses 70 into housing 12. *Id.* at 3:58–61, 4:3–19, 4:31–36; *see also id.* at Fig. 2 (depicting a back view of viewer 10). Housing 12 also includes a view divider (identified in Figure 1 with dashed lines but no reference number), which "isolate[s] the field of view of the left eye from the right eye." *Id.* at 4:40–53; *see also id.* at Fig. 3 (depicting a top view of viewer 10 with view divider 20).

Figures 7A and 7B (reproduced below) depict a cross-sectional view of a VR viewer according to an embodiment of the invention of the '199 patent. Ex. 1001, 3:18–22, 7:18–20.

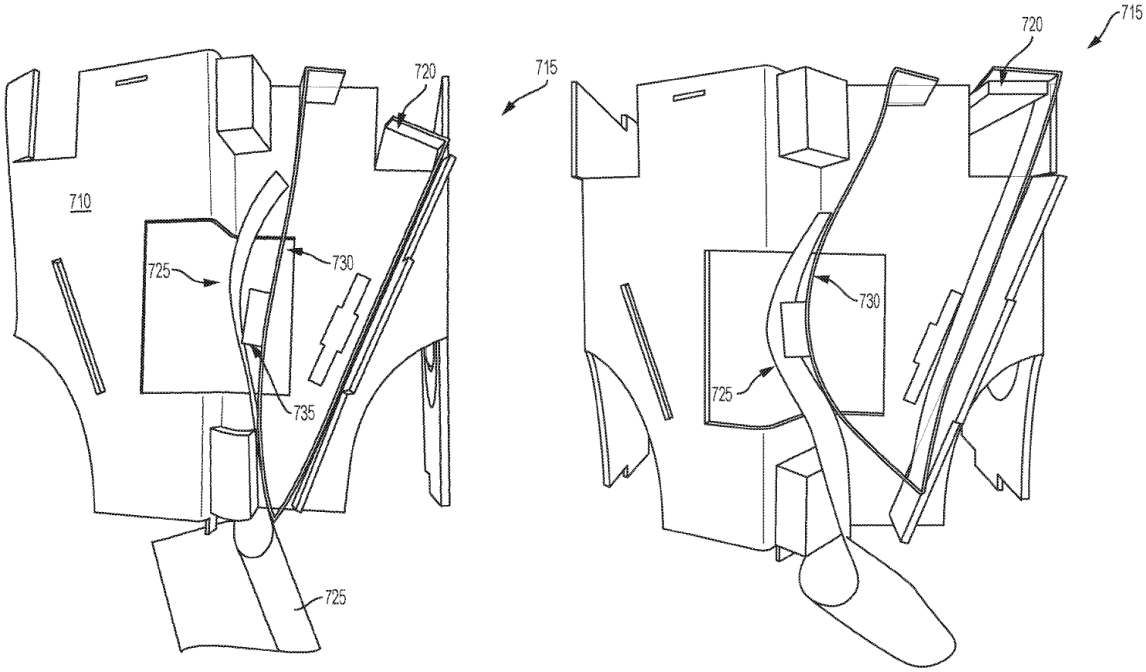


FIG. 7A FIG. 7B

Figures 7A and 7B each illustrate view divider 710 with one side of the view divider folded back so as to expose a portion of user input mechanism 715, which is located in the interior of the viewer. *Id.* at 7:46–64, 9:63–10:5.

When the proximal end of a lever (not shown in these figures) is activated by a user, distal end 720 moves, thereby deforming coupling 730 and causing input mechanism 715 to move from unactuated state (shown in Figure 7A), in which electrical shield 725 does not contact an electrical device's touchscreen, to an actuated state (or "extended position"; shown in Figure 7B), in which electrical shield 725 contacts the touchscreen. *Id.* at 7:30–37, 7:51–64, 8:34–49; *see also* Figs. 7C–7E (depicting other views of actuated and unactuated states along with lever's proximal end 722). A capacitive touchscreen of an electronic device (not shown in these figures) can detect electrical shield 725 when input mechanism 715 is in the extended position. *Id.* at 8:24–33.

### *E. Challenged Claims*

Petitioner challenges claims 1, 2, 4–6, 17–26, 30, 34, 35, and 37–39 of the '199 patent. Pet. 8. Of these, claims 1 and 30 are independent. These claims recite:

> 1. [a] A virtual reality viewer for use with a mobile electronic device having a touchscreen, the viewer comprising:
>
> [b] a first lens and a second lens, wherein the first lens is facing the same direction as the second lens, and wherein the first lens and the second lens are spaced apart in a horizontal direction;
>
> [c] a frame having a first side and a second side opposite the first side, the first side configured to hold the first lens and the second lens, the second side configured to receive the mobile electronic device, wherein the frame is configured to hold the mobile electronic device such that the mobile electronic device is generally centered in a horizontal direction and directly in a user's field of view when looking through the first side of the frame; and
>
> [d] a touchscreen input constructed of material and having a surface such that only a portion of the surface of the touchscreen input is

> configured to contact a central region of the touchscreen of the mobile electronic device when the touchscreen input is activated.

Ex. 1001, 13:6–26 (Petitioner's reference designations added).

> 30. [a] A virtual reality viewer for use with a mobile electronic device having a touchscreen, the viewer comprising:
>
> [b] a first lens and a second lens, wherein the first lens is facing the same direction as the second lens, and wherein the first lens and the second lens are spaced apart in a horizontal direction;
>
> [c] a frame having a first side and a second side opposite the first side, the first side configured to hold the first lens and the second lens, the second side configured to receive the mobile electronic device, wherein the frame is configured to hold the mobile electronic device such that the mobile electronic device is generally centered in a horizontal direction and directly in a user's field of view when looking through the first side of the frame;
>
> [d] a user input that is accessible from an exterior of the enclosure and has a first position and a second position; and
>
> [e] a touchscreen input that is coupled to the user input and generally centered between the first lens and the second lens in the horizontal direction, wherein the touchscreen has a surface such that only a portion of the surface of the touchscreen input is configured to contact a central region of the touchscreen when the user input is in the second position.

*Id.* at 14:60–15:16 (Petitioner's reference designations added).

## II. ANALYSIS

### *A. Legal Standards*

A patent claim is unpatentable under 35 U.S.C. § 103 "if the differences between the claimed invention and the prior art are such that the claimed invention as a whole would have been obvious before the effective filing date of the claimed invention to a person having ordinary skill in the

art to which the claimed invention pertains." The legal question of obviousness is resolved on the basis of underlying factual determinations including (1) the scope and content of the prior art; (2) any differences between the claimed subject matter and the prior art; (3) the level of ordinary skill in the art; and (4) when in evidence, objective evidence of obviousness or nonobviousness. *Graham v. John Deere Co. of Kansas City*, 383 U.S. 1, 17–18 (1966). One seeking to establish obviousness based on more than one reference also must articulate sufficient reasoning with rational underpinnings to combine teachings. *See KSR Int'l Co. v. Teleflex Inc.*, 550 U.S. 398, 418 (2007).

In an *inter partes* review, the petitioner has the burden of proving unpatentability by a preponderance of the evidence. 35 U.S.C. § 316(e); *see also Dynamic Drinkware, LLC v. Nat'l Graphics, Inc.*, 800 F.3d 1375, 1378 (Fed. Cir. 2015) (stating that petitioner's burden of persuasion "never shifts to the patentee").

### *B. Level of Ordinary Skill in the Art*

Our reviewing court has explained that "the level of skill in the art is a prism or lens through which a judge, jury, or the Board views the prior art and the claimed invention." *Okajima v. Bourdeau*, 261 F.3d 1350, 1355 (Fed. Cir. 2001) (citing *Al-Site Corp. v. VSI Int'l, Inc.*, 174 F.3d 1308, 1324 (Fed. Cir. 1999)). "This reference point prevents these factfinders from using their own insight or, worse yet, hindsight, to gauge obviousness." *Id.* In finding the level of ordinary skill in the art, we may consider various factors, including: "(1) the educational level of the inventor; (2) type of problems encountered in the art; (3) prior art solutions to those problems;

(4) rapidity with which innovations are made; (5) sophistication of the technology; and (6) educational level of active workers in the field." *Best Med. Int'l, Inc. v. Elekta Inc.*, 46 F.4th 1346, 1353 (Fed. Cir. 2022) (quoting *Daiichi Sankyo Co. v. Apotex, Inc.*, 501 F.3d 1254, 1256 (Fed. Cir. 2007)). "The patent's purpose can also be informative." *Id.* (citation omitted).

Petitioner asserts that the level of ordinary skill in the art corresponds to "an undergraduate degree (or equivalent) in mechanical engineering or a related field" and "two years of professional experience in mechanical and basic optical design or engineering." Pet. 26 (citing Ex. 1002 ¶¶ 25–26). In addition, Petitioner asserts that an ordinarily skilled artisan would have had "knowledge of mechanical actuation systems, basic optical design with lenses, head-mounted displays, [and] a basic understanding of touchscreen technology." *Id.*

In the Institution Decision, we preliminarily adopted Petitioner's proposed level of skill, explaining that it comports with the level of skill necessary to understand and implement the teachings of the '199 patent. Inst. Dec. 9–10. We responded to Patent Owner's pre-institution argument, which advocated additional touchscreen experience (*see* Prelim. Resp. 28), by stating that "Patent Owner does not sufficiently identify what [additional] expertise is allegedly required." Inst. Dec. 10. We also rejected Patent Owner's pre-institution argument that Mr. Keller (Petitioner's declarant) does not qualify as an ordinarily skilled artisan (*see* Prelim. Resp. 28–29), as he has the requisite technical degree and extensive experience designing head-mounted displays. Inst. Dec. 10–11 (citing Ex. 1002 ¶¶ 8, 10–11).

In its Response, Patent Owner argues that an ordinarily skilled artisan would have had "a minimum of two years of experience in implementing

touchscreen and optics technology, along with relevant education (e.g., a bachelor's degree) in science or engineering." PO Resp. 4 (citing Ex. 2050 ¶ 25). According to Patent Owner, the skills and knowledge identified by Petitioner are unnecessary because lenses and head-mounted displays were "well known" and because the mechanical aspects of the claimed invention are "readily understood by even those with limited specific educational background." *Id.* at 1–2. Patent Owner also advocates requiring "[a] strong understanding of touchscreen technology" because this knowledge would have been required in order to "understand the differences between the challenged claims and the prior art." *Id.* at 2–3.

Having considered the full record, we agree with Petitioner (*see* Pet. 26), and we find that an ordinarily skilled artisan would have had an undergraduate degree (or equivalent) in mechanical engineering or a related field, two years of professional experience in mechanical and basic optical design or engineering, and basic knowledge regarding mechanical actuation systems, lenses, head-mounted displays, and touchscreen technology. Our finding is consistent with the educational level of the inventor, the patent's purpose, and the Specification's description of a person of ordinary skill in the art: the inventor (Mr. Buckley) had a mechanical engineering degree (Ex. 1023, 133:16–20); the purpose of the '199 patent is to create an improved VR viewer that can provide input to an enclosed device's touchscreen (*see, e.g.*, Ex. 1001, 2:13–36 (describing disadvantages associated with prior designs)); and the Specification describes ordinarily skilled artisans as having basic knowledge of head-mounted displays, lenses, touchscreens, and material properties (*see, e.g.*, *id.* at 2:1–12, 4:3–14, 4:36–39, 6:19–31, 8:2–12, 11:20–28).

We do not agree with Patent Owner's arguments (*see* PO Resp. 2–4) that an ordinarily skilled artisan would have had a sophisticated understanding of touchscreens or extensive experience implementing them. Patent Owner identifies (and we discern) no support in the intrinsic record for its position, and the Specification instead states that an ordinarily skilled artisan would have understood *basic* touchscreen concepts. *See, e.g.*, Ex. 1001, 4:4–14 (ordinarily skilled artisan would understand that "electronic device 15 can . . . receive user inputs via a touch sensitive user interface (e.g., a capacitive touch sensitive display)"), 6:19–31 (ordinarily skilled artisan would understand that "capacitive touch sensitive display 17 can detect the particular location of a change in the electrical property that is caused by the user touch," which is interpreted as a particular input), 11:20–28 (ordinarily skilled artisan would understand that embodiment of electrical shield can "work on a variety of touch screen technologies such as capacitive, resistive, or conductive"). In addition, the sole inventor of the '199 patent (Mr. Buckley) testified that he did not have any experience implementing touchscreens. Ex. 1023, 140:22–25. He also indicated that an understanding of "how a touch screen works" would have been sufficient to understand the '199 patent. *Id.* at 141:1–10; *cf.* PO Sur-reply 2 (stating that the ordinarily skilled artisan "would need to understand . . . how to induce a touch event on [a touchscreen]").

Patent Owner's other arguments regarding the level of skill are premised on two erroneous assumptions. First, Patent Owner assumes that the level of ordinary skill in the art cannot include knowledge that was "well known" or "readily understood" (*see* PO Resp. 1–2), but we do not agree. Our goal is to define the level of ordinary skill in the art, and the

Specification's reference to the ordinary artisan's knowledge indirectly describes the person of ordinary skill in the art. *See, e.g.*, Ex. 1001, 2:1–8, 4:36–39 (describing what is known to "those [skilled] in the art")); *see also Phillips v. AWH Corp.*, 415 F.3d 1303, 1313 (Fed. Cir. 2005) (en banc) (explaining that patents are written for ordinarily skilled artisans).

Second, Patent Owner appears to assume that the ordinarily skilled artisan would have understood the details of different types of capacitive touchscreens because such knowledge is required to understand Patent Owner's arguments regarding Kondo. *See* PO Resp. 2–3, 12–13. We disagree. Patent Owner fails to sufficiently explain why an ordinarily skilled artisan would have possessed this level of expertise in touchscreens. The claimed invention is not directed to a particular type of capacitive touchscreen, and neither the Specification nor the prior art provides any support for Patent Owner's assertion that the ordinarily skilled artisan would have had such knowledge or expertise. Although Patent Owner cites to Mr. Mackey's testimony (*see* PO Resp. 1–4; *see also id.* at 6), his testimony is conclusory and is not supported by other evidence of record (*see* Ex. 2050 ¶¶ 18–25; *see also id.* ¶ 37). As a result, we assign little weight to this testimony. *See* 37 C.F.R. § 42.65(a) ("Expert testimony that does not disclose the underlying facts or data on which the opinion is based is entitled to little or no weight.").

Finally, we are not persuaded by Patent Owner's attempts to discredit Mr. Keller (Petitioner's expert). We do not agree with Patent Owner's argument that Mr. Keller misunderstands capacitive touchscreens (*see* PO Resp. 3 (quoting Ex. 1002 ¶ 31)), as the cited passage simply provides a high-level technical background to explain the basic differences between

resistive and capacitive screens (*see* Ex. 1002 ¶ 31). Moreover, Mr. Keller's description of Kondo as operating by capacitance and as permitting either a person or "a different capacitive element other than the human body" to operate a touchscreen contradicts Patent Owner's argument that Mr. Keller does not understand that a human body is not the only possible element to interact with a touchscreen. *Compare* Ex. 1002 ¶¶ 48–50, *with* PO Resp. 3. In addition, while we agree that Mr. Keller was not familiar with the term "surface-capacitive touchscreen[]" (PO Resp. 6, 8), we do not agree that this fact is probative of his credibility. We determine that an ordinarily skilled artisan would not necessarily have known the nomenclature for (or differences between) the various types of capacitive touchscreens.

We also reject Patent Owner's belated attempt to argue that Mr. Keller does not have ordinary skill in the art. *See* PO Sur-reply 2. This argument is untimely and forfeit because it was not raised in the Response and is not fairly responsive to the Reply. *See* Paper 32 (Scheduling Order), 9 (cautioning Patent Owner that "any arguments not raised in the response may be deemed waived");[7] 37 C.F.R. § 42.23(b) ("A sur-reply may only respond to arguments raised in the corresponding reply . . . ."); Trial Practice Guide[8] 73–74 (explaining that "replies and sur-replies can help crystalize issues for decision" but cannot belatedly raise new issues or evidence); *see*

---

[7] *See In re Google Tech. Holdings LLC*, 980 F.3d 858, 862–63 & n.8 (Fed. Cir. 2020) (explaining that "forfeiture is the failure to make the timely assertion of a right" and noting that the court and parties have sometimes used the term "waiver" when applying the doctrine of forfeiture).

[8] PTAB Consolidated Trial Practice Guide (Nov. 2019), *available at* https://www.uspto.gov/TrialPracticeGuideConsolidated.

*also Parus Holdings, Inc. v. Google LLC*, 70 F.4th 1365, 1373 (Fed. Cir. 2023) ("By raising an argument in its Preliminary Response, but not its Response, a patent owner waives said argument."). Moreover, even if this argument had been properly presented, it would not have been persuasive given Mr. Keller's background and experience. *See* Ex. 1002 ¶¶ 8, 10–11 (Mr. Keller testifying that he has a B.S. in Mechanical Engineering and over two decades of experience designing head-mounted displays, including direct involvement in "the mechanical, electrical, optical and integration aspects" of those designs).

### *C. Claim Construction*

We interpret claim terms using "the same claim construction standard that would be used to construe the claim in a civil action under 35 U.S.C. 282(b)." 37 C.F.R. § 42.100(b). Under the principles set forth by our reviewing court, the "words of a claim 'are generally given their ordinary and customary meaning,'" as would be understood by a person of ordinary skill in the art in question at the time of the invention. *Phillips*, 415 F.3d at 1312 (quoting *Vitronics Corp. v. Conceptronic, Inc.*, 90 F.3d 1576, 1582 (Fed. Cir. 1996)).

In the Petition, Petitioner proposes a construction for "virtual reality viewer" (which appears in the preamble of every claim), asserting that it means "'a viewer of an artificial environment,' where 'viewer' includes both handheld devices and headsets." Pet. 27–28. Patent Owner takes no position regarding the construction of this or any other claim term or phrase. *See* PO Resp. 4.

We determine that it is not necessary to address the construction of any claim terms or phrases for purposes of this proceeding. *See Nidec Motor Corp. v. Zhongshan Broad Ocean Motor Co.*, 868 F.3d 1013, 1017 (Fed. Cir. 2017) (noting that "we need only construe terms 'that are in controversy, and only to the extent necessary to resolve the controversy'" (quoting *Vivid Techs., Inc. v. Am. Sci. & Eng'g, Inc.*, 200 F.3d 795, 803 (Fed. Cir. 1999))).

### *D. Obviousness Ground Based on Kondo and Chu*

Petitioner contends that the subject matter of claims 1, 2, 4–6, 17–26, 30, 34, 35, and 37–39 would have been obvious over Kondo and Chu. Pet. 29–103. Patent Owner argues that a person of ordinary skill would not have combined Kondo and Chu (PO Resp. 12–18, 22), and that secondary considerations of non-obviousness show that independent claim 1 would not have been obvious (*id.* at 23–63).

For the reasons explained below, we determine that Petitioner fails to show that any of claims 1, 2, 4–6, and 17–26 would have been obvious over Kondo and Chu, but that Petitioner shows that claims 30, 34, 35, and 37–39 would have been obvious over Kondo and Chu.

#### *1. Summary of Kondo (Ex. 1003)*

Kondo describes an "attachment" into which a smartphone is placed so that a user can view "three-dimensional stereoscopic images." Ex. 1003, Abstr., ¶ 21. Kondo explains that, because "smartphone 1500 is stowed inside the attachment 2, it is not possible to input an operation to the touch panel as-is." *Id.* at Abstr. Kondo solves this problem by equipping its attachment with "a remote touch circuit" that allows a user to provide input

to the smartphone's touchscreen from outside the attachment. *Id.* at Abstr., ¶ 1. Kondo's Figure 1 (reproduced below) illustrates an exemplary embodiment of its attachment with a remote touch circuit. *Id.* ¶ 22.

FIG. 1

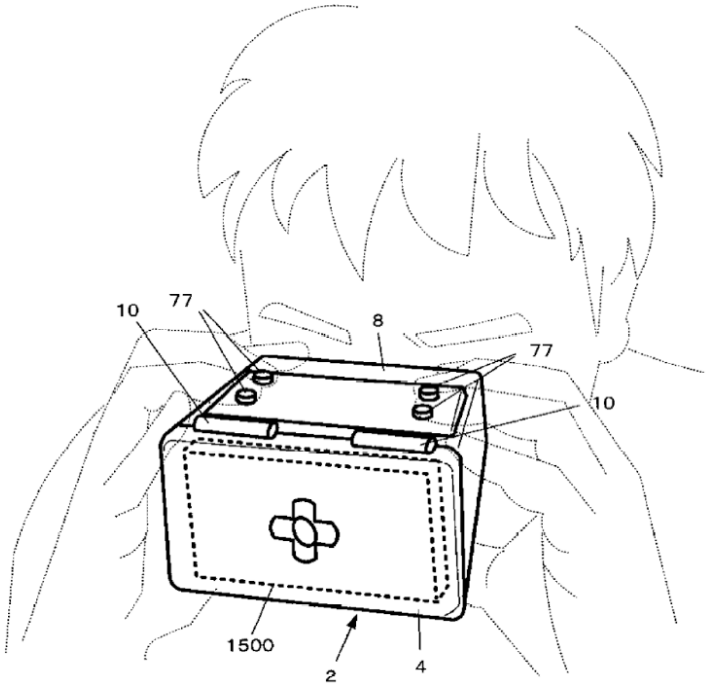


Figure 1 depicts attachment 2, "provided with a holding part 4 that can open and close on the front end thereof, and left and right eyepieces [not shown] . . . on the rear end thereof." *Id.* ¶ 22, Fig. 1. This figure also depicts smartphone 1500 (inside attachment 2), a user (who is looking into the eyepieces), attachment main body 8, and button parts 77 (which are part of Kondo's remote touch circuit). *Id.* ¶¶ 22, 38.

Figure 5 (reproduced below) illustrates Kondo's attachment 2 as seen from the side. Ex. 1003 ¶ 29.

FIG. 5

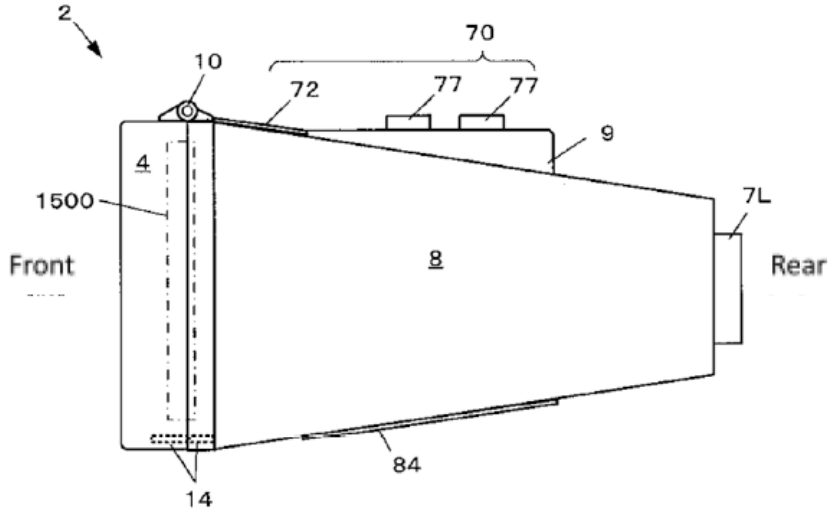


Figure 5 depicts attachment 2, which includes holding part 4 (into which smartphone 1500 has been placed), remote touch circuit 70 (which includes electrical wire part 72 and button parts 77), attachment main body 8, and left eyepiece 7L. *Id.* ¶¶ 37, 44, Fig. 5.

Kondo teaches that smartphone 1500 includes capacitive touch panel 1506, which serves as both a display and an input device. Ex. 1003 ¶¶ 23–24. Figure 3 (reproduced below) shows an exemplary display. *Id.* ¶ 27.

FIG. 3

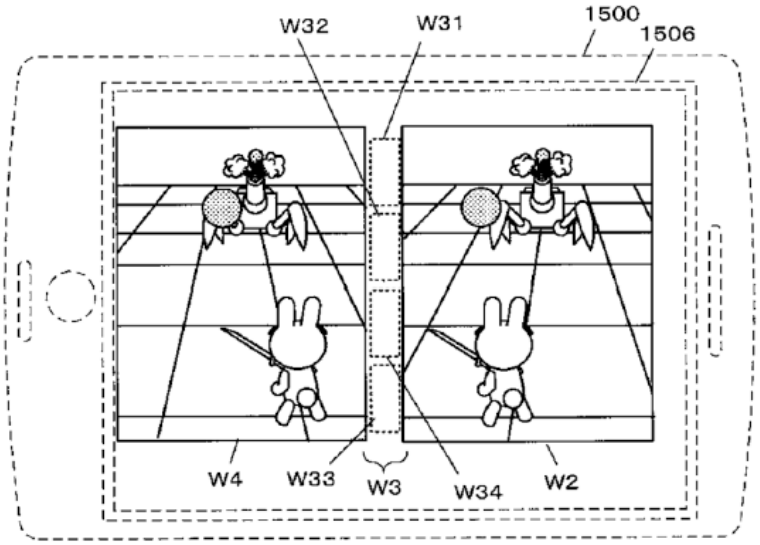


Figure 3 depicts smartphone 1500 with touch panel 1506, which includes upper display area W2, lower display area W4, and operation input area W3 (located between areas W2 and W4) with four virtual button positions W31–W34. *Id.* ¶¶ 27–28, Fig. 3.

Kondo's attachment 2 includes a partition wall placed in the center of attachment main body 8, and this partition wall includes four conductive pads arranged so that they contact virtual button positions W31–W34 when holding part 4 is closed. Ex. 1003 ¶ 37, 41, Figs. 4, 9. Each of these conductive pads is associated with a corresponding button part 77, and when button part 77 is depressed, it is electrically connected to the corresponding conductive pad. *Id.* ¶¶ 40, 42–43. Kondo explains the operation as follows:

> When the user presses the button part 77 with a finger F1, the touch panel 1506 is electrical conductively connected to the finger of the user through the conductive pad 75, electrical wire part 72 [in attachment main body 8], and button part 77. That is to say, that substantially, the impedance (capacitor or the like capacitance) of the finger (human body) of the user is electrically connected to the touch panel 1506. Therefore, the

> touch panel 1506 can detect a current value corresponding to this impedance and recognize that a touch operation has been performed at the virtual button positions W31 to W34.

*Id.* ¶ 48.

### 2. *Summary of Chu (Ex. 1004)*

Chu describes a mechanism for actuating a capacitive touch screen of a digital device (e.g., a smartphone) while the device is located in a waterproof housing. Ex. 1004, Abstr., ¶ 2. Figures 3 and 4 (reproduced below) illustrate an embodiment of Chu's actuator mechanism at rest and at an activation position. *Id.* ¶¶ 25–26.

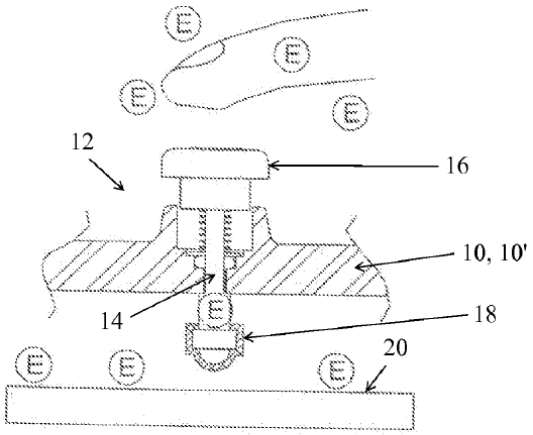


**FIG. 3**

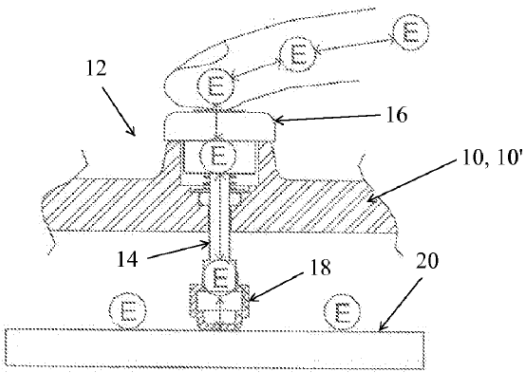


**FIG. 4**

Both Figures 3 and 4 depict housing 10, actuator mechanism 12 (which includes actuator shaft 14, press button 16, and probe head 18), touch screen 20, a finger, and electric charge E. *Id.* ¶¶ 39–41. Figure 3 depicts actuator mechanism 12 at rest—the finger is not in contact with press button 16, and probe head 18 is not in contact with touch screen 20. *Id.* ¶ 40, Fig. 3. Figure 4 depicts actuator mechanism 12 at an actuation position—the finger contacts press button 16, probe head 18 contacts touch screen 20, and

"electric charge E can be transferred between the finger of the user and the capacitive touch screen 20 through the press button 16, the actuator shaft 14 and the probe head 18, as shown by the arrows." *Id.* ¶ 41, Fig. 3; *see also id.* ¶¶ 54–55 (describing actuation in greater detail).

In addition, Chu describes another embodiment in which actuator mechanism 12' includes an adapter that connects actuator shaft 14' to probe head 18' such that the latter is "disposed at an off-center position away from the center axis X of the actuator shaft 14'." Ex. 1004 ¶¶ 50–51, Figs. 7a, 7b; *see also id.* ¶¶ 57–58 (identifying benefit of embodiment). Chu also describes a modification of this embodiment, where actuator mechanism 12" allows a user to move probe head 18" in a swiping or circular motion after it contacts touch screen 20. *Id.* ¶¶ 60–62, Figs. 9a, 9b.

### *3. Independent Claim 1*

We begin our analysis of claim 1 by identifying the proposed combinations of Kondo and Chu and explaining why we find that each of these teaches all limitations of claim 1. We then turn to the two disputed issues: whether an ordinarily skilled artisan would have been motivated to combine Kondo and Chu, and whether objective indicia of nonobviousness indicate that the claimed invention would not have been obvious.

For the reasons explained below, we determine that Petitioner has not shown, by a preponderance of the evidence, that claim 1 would have been obvious over Kondo and Chu.

#### *a. Proposed Kondo-Chu Combinations*

Petitioner proposes two combinations of Kondo and Chu, each of which replaces Kondo's electrical input mechanism (including button part

77 and associated conductive wire) with Chu's mechanical input mechanism. Pet. 41–44; *see id.* at 38–40. In the first combination, Petitioner uses Chu's first embodiment (with actuator mechanism 12) (*id.* at 41–42) and, in the second combination, uses Chu's second and third embodiments (with actuator mechanism 12', 12") (*id.* at 42–44). Petitioner illustrates each proposed combination by annotating Kondo's Figure 5 (*id.* at 42–43), and these two annotations are reproduced below.

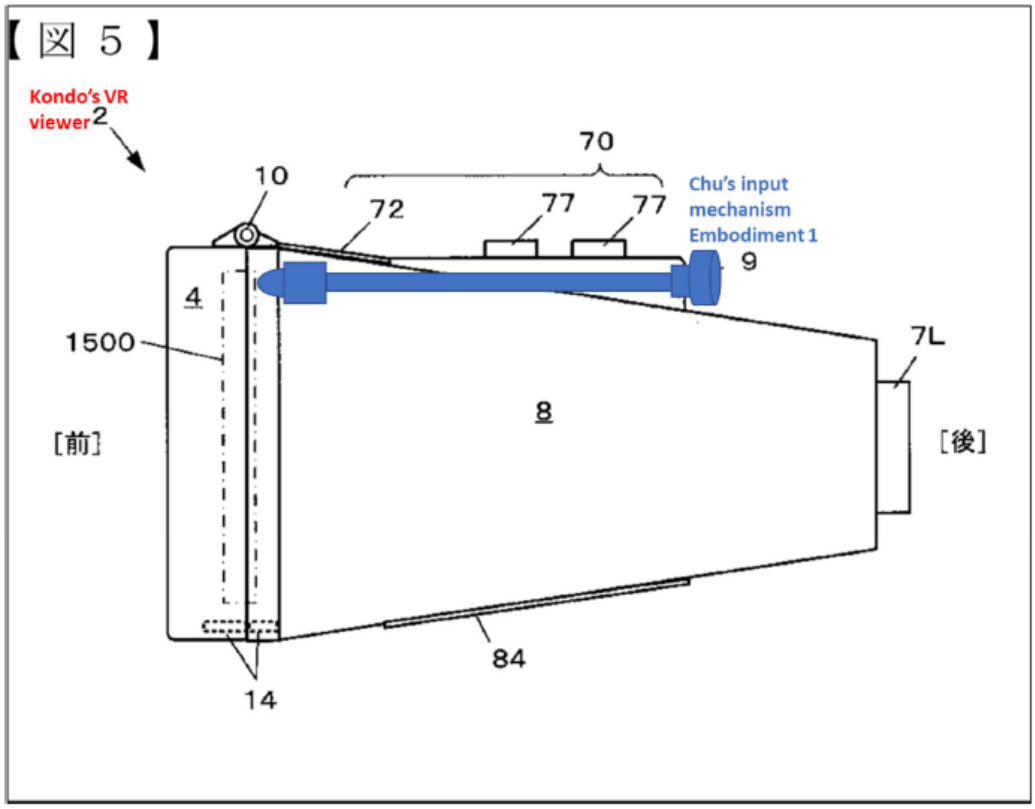

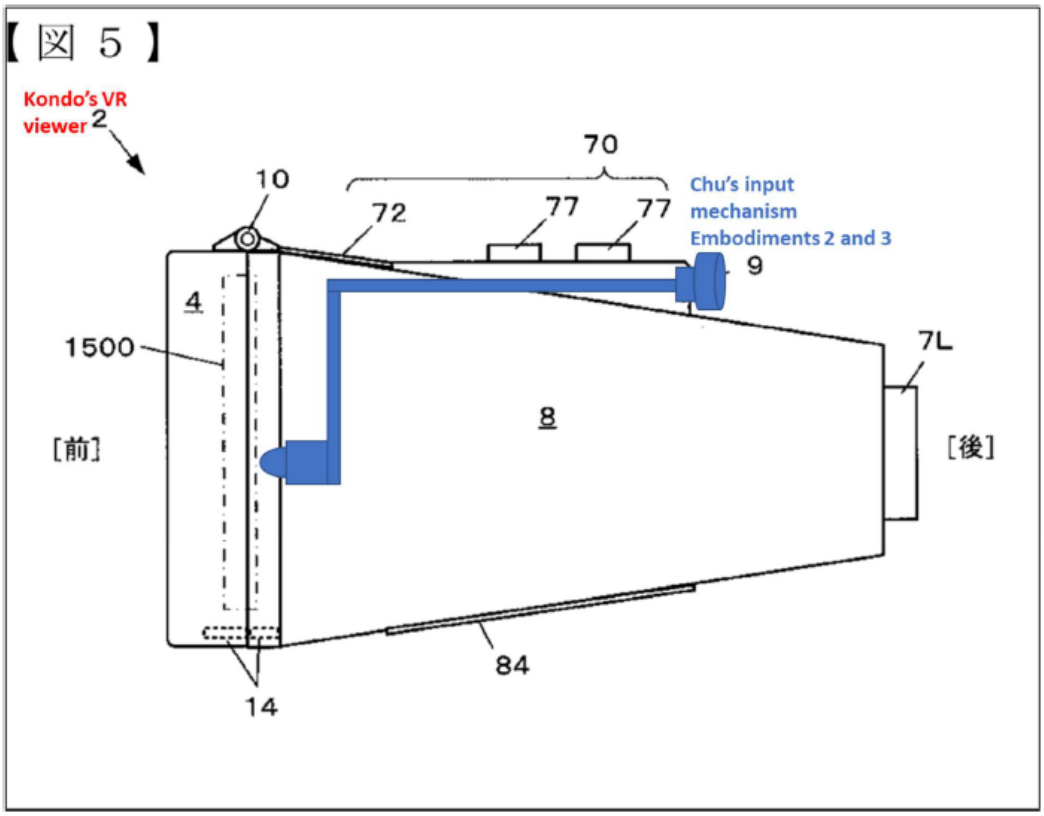


Each of Petitioner's annotations of Kondo's Figure 5 add a structure (in blue) to the top of Kondo's attachment 2 and include red text identifying attachment 2 as "Kondo's VR viewer" and blue text identifying the actuator mechanism as either "Chu's input mechanism Embodiment 1" (for the first combination) or "Chu's input mechanism Embodiments 2 and 3" (for the second combination). *Id.*

For each proposed combination, Petitioner submits that an ordinarily skilled artisan would have recognized that minor adjustments might need to be made (e.g., by modifying the size of Chu's input device or Kondo's device or by providing supportive structure inside Kondo's device). Pet. 41 (citing Ex. 1002 ¶ 66; Ex. 1004 ¶ 59, Figs. 3–10), 43–44 (citing Ex. 1002 ¶ 69). Petitioner also states that each combination would be arranged such that the input device contacts the central region of the smartphone's

touchscreen, as disclosed by Kondo. *Id.* at 44–45 (citing Ex. 1003 ¶¶ 27–28, Fig. 3; Ex. 1002 ¶ 70).

*b. Limitation-by-Limitation Analysis*

Petitioner relies on Kondo for elements 1(a), 1(b), and 1(c).[9] Pet. 45–64. According to Petitioner, "Kondo refers to its VR viewer as an 'attachment.'" *Id.* at 45 (citing *id.* at 29–32); *see also id.* at 29 (citing Ex. 1003 ¶ 21). Petitioner asserts that Kondo's attachment 2 encloses smartphone 1500 that has touchscreen display 1506, which is a capacitive touchscreen. *Id.* at 45–47 (citing Ex. 1003 ¶¶ 5, 9, 21–24, 27, Figs. 1–3, claims 1 and 4). Petitioner also asserts that Kondo's viewer includes left and right lenses, which are spaced apart in a horizontal direction, face the same direction, and are separated by a partition wall. *Id.* at 47–54 (citing Ex. 1003 ¶¶ 22, 27, 37, Figs. 1, 3, 4(2), 6; Ex. 1001, 2:5–8). Petitioner contends that the housing of Kondo's VR viewer teaches the claimed "frame" and includes a first side (which holds the eyepieces) that is opposite a second side (which receives smartphone 1500). *Id.* at 54–57 (citing Ex. 1003 ¶¶ 22, 30–32, Figs. 6, 7), 62–63 (citing Ex. 1003 ¶¶ 22, 30, Fig. 4). Petitioner further contends that Kondo's housing holds smartphone 1500 such that it is horizontally centered and directly within the user's view when the user looks through the eyepieces. *Id.* at 58–63 (citing Ex. 1003 ¶¶ 22, 27–28, 30, 33–34, Figs. 1–4, 8); *see also id.* at 55–57 (citing Ex. 1003, Figs. 6, 7).

[9] We use Petitioner's reference designations, as listed in Section I.E, *supra*.

Petitioner contends that the proposed Kondo-Chu combinations disclose element 1(d).[10] Pet. 64–77. According to Petitioner, when the user activates Chu's actuator mechanism (12 or 12', 12") by pressing button 16, only a portion of the surface of probe pad 30—"specifically, the middle, bottom portion"—contacts the touchscreen. *Id.* (citing Ex. 1004 ¶¶ 11, 14, 19, 38, 49, 53–56, 58–62, Figs. 3–5).

Patent Owner does not dispute these contentions.[11] *See* PO Resp.

Having considered the full record, we are persuaded that each of the Kondo-Chu combinations teaches each limitation of claim 1. *See* Pet. 45–77. In particular, we find that Kondo discloses elements 1(a),[12] 1(b), and 1(c). Kondo describes a virtual reality viewer with attachment 2 that holds smartphone 1500 such that its touchscreen 1506 is horizontally centered and directly within the user's view when looking through lenses 7L, 7R. *See,*

---

[10] Although we previously interpreted the Petition as including an alternative contention for this element (Inst. Dec. 32–33 (citing Pet. 64–73)), Petitioner clarifies that it does not contend that claim 1 is obvious over Kondo alone and, in fact, argues the opposite. *See* Pet. Reply 3 ("[Patent Owner] addresses Kondo alone and does not address the teachings of *the Kondo/Chu combination, which is the ground that Petitioner is presenting*." (emphasis added)); Tr. 8:3–12, 15:17–21; *see also* Pet. 8, 45, 64 (relying on both Kondo and Chu); *cf.* Pet. 1–2, 16–19; PO Sur-reply 12 ("Kondo does not teach the claimed input mechanism [recited in element 1(d)] at least because its touch pads are always in contact with the touchscreen.").

[11] To the extent Patent Owner argues that Kondo fails to teach the claimed "touch-screen" because Kondo describes a "surface-capacitive" touchscreen (*see* PO Resp. 12–13), this argument is unavailing because the claim does not require any particular type of touchscreen.

[12] Petitioner has sufficiently shown that Kondo discloses the preamble (i.e., element 1(a)), so we need not determine whether the preamble is limiting. *See Vivid Techs.*, 200 F.3d at 803.

*e.g.*, Ex. 1003 ¶¶ 21–23, 27, Figs. 1, 3, 7. Lenses 7L, 7R face the same direction and are spaced apart in a horizontal direction, and smartphone 1500 and lenses 7L,7R are on opposite sides of attachment 2. *See, e.g.*, Ex. 1003 ¶ 22, Abstr., Figs. 1, 6. Also, each of the Kondo-Chu combinations disclose element 1(d). Chu's actuator mechanism (12 or 12', 12") includes probe pad 30, and in the combinations, only a portion of the surface of probe pad 30 contacts a central region of the touchscreen when the actuator mechanism is in an actuation position. *See, e.g.*, Ex. 1003 ¶¶ 27–28, 41, Fig. 3; Ex. 1004 ¶¶ 41, 48–49, 55, 58, 62, Figs. 3–4, 7a, 9a.

*c. Motivation to Combine Kondo and Chu*

Petitioner contends that an ordinarily skilled artisan would have had a reasonable expectation of success in making the proposed combinations, given that these are "simple mechanical devices." Pet. 40 (citing Ex. 1002 ¶ 65); *see also id.* at 41–44 (citing Ex. 1002 ¶¶ 66–69). Petitioner also contends that an ordinary artisan would have been motivated to make the proposed combinations of Kondo and Chu for three reasons. *Id.* at 38–40.

First, Petitioner asserts that "the most common touchscreens on the market as of the time of the '199 patent's alleged invention were capacitive and resistive." Pet. 38 (citing *id.* at 11–12 (citing Ex. 1004 ¶ 3; Ex. 1002 ¶ 31)). Petitioner submits that, although Kondo's electrical input mechanism can only work with capacitive screens, Chu's mechanical input mechanism can work with both capacitive and resistive screens. *Id.*; *see also id.* at 12–13 (identifying input required for capacitive and resistive screens), 37–38 (asserting that an ordinarily skilled artisan would have understood Chu to work with both types). As a result, according to Petitioner, a designer would

have been motivated to replace Kondo's input mechanism with Chu's input mechanism in order to "increase the usability and consumer appeal for their device by making it work with both capacitive and resistive screens." *Id.* at 38 (citing Ex. 1002 ¶ 58); *see also id.* at 38–39 (asserting that both references address a similar problem) (citing Ex. 1003, Abstr.; Ex. 1004 ¶ 9).

Second, Petitioner contends that a designer would also have been motivated to make the proposed combinations because Chu's input mechanism allows for different types of inputs at a single location (as compared to Kondo's one-type input) because it transmits different levels of pressure and allows for a swipe input. Pet. 39–40 (citing Ex. 1002 ¶¶ 60–61).

Third, Petitioner contends that a designer would also have been motivated to include Chu's waterproof design because it "would be less susceptible to damage from water and other environmental factors, like dirt and dust" and "would allow the device to be cleaned without fear of cleaning fluid reaching the inner parts of the device," which is important for sanitary environments (e.g., medical procedures or in manufacturing facilities). Pet. 40 (citing Ex. 1002 ¶¶ 62–64).

Patent Owner argues that an ordinarily skilled artisan would not have combined Kondo and Chu as proposed, and it presents three basic arguments in support of its contrary position. PO Resp. 12–18. First, Patent Owner alleges limitations in Kondo's disclosure. *Id.* at 4–13. Specifically, Patent Owner asserts that an ordinarily skilled artisan "would understand that Kondo's touch panel 1506 is a surface-capacitive touchscreen." *Id.* at 12; *see id.* at 4–11 (citing Ex. 1003 ¶¶ 12, 23–24, 33, 36, 38–39, 42, 46–48,

Fig. 10; Ex. 2050 ¶¶ 33–37, 39–43; Ex. 2053, 44:24–50:1, 57:21–58:16, 58:22–62:17, 64:4–66:10, 144:4–147:1). According to Patent Owner, an ordinarily skilled artisan "would have known with certainty that it was not possible to integrate a surface-capacitive touchscreen into a mobile consumer-electronics device such as a smartphone," and as a result, he "would not have been motivated to utilize Kondo's surface-capacitive touch panel 1506 as the mobile device recited in the challenged claims." *Id.* at 11–13 (citing Ex. 2050 ¶¶ 43, 45–46).

Second, Patent Owner argues that the proposed combination would add moving parts, which "would make the remote touch system more complicated and expensive" and "less reliable" without providing a "technical or user benefit." PO Resp. 13–14 (citing Ex. 2050 ¶ 47).

Third, Patent Owner argues that an ordinarily skilled artisan would not, in fact, have been motivated to modify Kondo to work with resistive touchscreens. PO Resp. 14–18. In support, Patent Owner submits that resistive touchscreens comprised little market share in 2014 (at the time of invention) and were used on low-cost devices that could not be used with a VR viewer. *Id.* at 14–16 (citing Ex. 2050 ¶¶ 48–50; Ex. 2034; Ex. 2064; Ex. 2065; Ex. 2036, 74–75). Patent Owner also submits that resistive touchscreens have poor optical properties and cannot process multi-touch gestures, which were a requirement for smartphones starting in 2007. *Id.* at 16–17 (citing Ex. 2050 ¶¶ 51–52).

Having considered the parties' arguments and the full record at trial, we determine that Petitioner has proven that an ordinarily skilled artisan would have been motivated to combine Kondo and Chu with a reasonable expectation of success. Chu's variable pressure input, as well as its swipe

input, are features that allow a wider range of input types and therefore would provide greater functionality to Kondo. *See* Pet. 39–40; Ex. 1002 ¶¶ 60–61. In addition, both Kondo and Chu address the same problem (i.e., the external activation of the touchscreen of an enclosed smartphone), and a person of ordinary skill in the art designing a VR viewer using Kondo would look to other available input mechanisms, such as the one in Chu. *See* Pet. 38–39; Ex. 1002 ¶ 59. As a result, we are persuaded that an ordinarily skilled artisan would have been motivated to replace Kondo's input mechanism with Chu's actuator mechanism (12 or 12', 12") in order to yield those predictable benefits.[13] *See, e.g.*, *KSR*, 550 U.S. at 417 ("[I]f a technique has been used to improve one device, and a person of ordinary skill in the art would recognize that it would improve similar devices in the same way, using the technique is obvious unless its actual application is beyond his or her skill."). We also find that the ordinarily skilled artisan also would have had a reasonable expectation of success. *See* Pet. 40–44; Ex. 1002 ¶¶ 65–69.

Patent Owner does not directly challenge this specific rationale. *See* PO Resp. 12–18; Pet. Reply 6; *cf.* PO Sur-reply 10. For example, Patent Owner does not argue that an ordinarily skilled artisan would not be motivated to accommodate a range of input types, and it does not argue that Chu's swipe functionality would not operate in the proposed combination.

---

[13] We rely on Petitioner's second rationale for combining Kondo and Chu (*see* Pet. 39–40 (different types of inputs)), but not its first or third rationales (*see id.* at 38 (resistive touchscreen), 40 (waterproofing)). At the end of this section, we explain our reasons for not relying on the latter two.

Patent Owner instead alleges that Kondo would have been unsuitable for use in Petitioner's proposed combination (*see* PO Resp. 4–13; PO Sur-reply 2–11), but those arguments are unavailing. Specifically, Patent Owner argues that Kondo's touch panel 1506 is a surface-capacitive touchscreen (PO Resp. 4–11), where smartphones instead used projective-capacitive touchscreens, making Kondo unsuitable for use in the proposed combination with Chu (*id.* at 11–13). These arguments are built on the premise that an ordinarily skilled artisan would not have used Kondo with a smartphone (*see, e.g.*, PO Resp. 11–12; PO Sur-reply 3), but Kondo expressly says the opposite. It specifically describes a three-dimensional viewer used with "smartphone 1500," which is also shown in its figures. *See, e.g.*, Ex. 1003 ¶¶ 21–23, Figs. 2, 3, 10. This is not a passing reference in Kondo—this is Kondo's invention. *E.g.*, *id.* at Abstr. In addition, Patent Owner's argument that an ordinarily skilled artisan would not have used Kondo for remote-touch capability (*see* PO Resp. 12–13) is similarly contradicted by Kondo: its stated objective is "to achieve remote operation input to a touch panel equipped on an electronic device" (Ex. 1003 ¶ 4; *see also, e.g.*, *id.* at Abstr.), and its electronic device is a smartphone 1500 (*id.* ¶¶ 21–23, 27, 33–37, 40–41, 47, 49–50, 53–58). We disagree with Patent Owner's arguments that an ordinarily skilled artisan would not have been motivated to use Kondo in the manner described by Kondo.[14] *See* PO Resp. 12–13.

---

[14] To the extent Patent Owner asserts that there could be errors in the drafting or translation of Kondo (Tr. 56:1–2, 56:16–20), these arguments are untimely because they were not raised in the briefs. Moreover, even if they had been timely raised, they would have been unavailing. Petitioner provides a declaration attesting to the accuracy of Kondo's translation (Ex. 1003, 1); Patent Owner identifies no specific translation errors; and

To support its contrary position, Patent Owner relies on Mr. Mackey's testimony (*see* Ex. 2050 ¶¶ 33–46), but its reliance on this testimony is unavailing. First, some of Mr. Mackey's testimony is contradicted by Kondo's express disclosures, which causes us to assign less weight to the testimony. In particular, Mr. Mackey testifies that an ordinarily skilled artisan "would know that a surface-capacitive touchscreen such as Kondo's touch panel 1506 would not be used in personal mobile devices" (*id.* ¶ 45), but as noted above, Kondo expressly states that its viewer is used with "smartphone 1500" (*see, e.g.*, Ex. 1003 ¶¶ 21–23, Abstr., Figs. 2, 3, 10). In addition, although Mr. Mackey testifies that Kondo's description is consistent with a surface-capacitive touchscreen (Ex. 2050 ¶¶ 34–35), Kondo expressly states that its smartphone uses a "projected capacitive touch panel" (Ex. 1003 ¶ 24). Second, even if we agreed with Mr. Mackey that Kondo includes errors or inconsistencies in its description of the touchscreen, this still would not help Patent Owner. Petitioner relies on Kondo's description of a *viewer* into which a smartphone is placed, not its description of the smartphone's *touchscreen*, and we do not agree that any of the alleged errors or inconsistencies when describing the latter would have affected the ordinarily skilled artisan's understanding of the former.

Ultimately, Patent Owner's argument that Kondo describes a surface-capacitive touchscreen instead of a projected-capacitive touchscreen (*see* PO Resp. 4–13) is a red herring. The '199 patent is directed to a VR viewer for use with a mobile electronic device having a touchscreen—it is not directed to a type of touchscreen. The described viewer can work with "a variety of

---

Kondo consistently describes and depicts the use of its touchscreen with a smartphone, indicating that this aspect of its disclosure is not an error.

types of touchscreens" (Ex. 1001, 7:14–17), and neither the claims nor the Specification make any reference to types of capacitive touchscreens. The Specification does not provide details regarding the operational differences between different types of capacitive screens, and such details are also not germane to the asserted prior art references or Petitioner's motivation to combine them.[15] Rather, Patent Owner delves into these details for two purposes: (1) to argue that an ordinarily skilled artisan would not have used Kondo in the way Kondo describes, and (2) to undermine the credibility of Petitioner's expert. Neither has merit. As for the former, we credit Kondo's disclosure over the arguments and expert testimony advanced by Patent Owner (as explained in the prior paragraph), and as for the latter, we determine that an ordinarily skilled artisan need not have been familiar with the types of capacitive touchscreens (*see supra* § II.B).

Patent Owner's next argument is that the addition of moving parts (and the alleged cost and unreliability associated with that change) would discourage the ordinarily skilled artisan from making this combination (*see* PO Resp. 13–14), but we disagree. Patent Owner fails to provide any details, supporting evidence, or discussion of the alleged disadvantages, and it fails to address how an ordinarily skilled artisan would have weighed those disadvantages relative to the advantages of the proposed combination. Although Patent Owner cites to Mr. Mackey's testimony, he provides the same conclusory assertions, which we do not credit. *See* Ex. 2050 ¶ 47; *see*

[15] In other words, even if Kondo describes a "surface-capacitive" touchscreen (despite its statement that the touchscreen is "projected capacitive" (Ex. 1003 ¶ 24)), Patent Owner's evidence does not show any disadvantage to applying variable pressure input or swipe input in the device of Kondo.

*also* 37 C.F.R. § 42.65(a) ("Expert testimony that does not disclose the underlying facts or data on which the opinion is based is entitled to little or no weight."). And the mere existence of tradeoffs does not necessarily undercut a motivation to combine. *See Intel Corp. v. Qualcomm Inc.*, 21 F.4th 784, 795 (Fed. Cir. 2021) (stating that "simultaneous advantages and disadvantages do not necessarily obviate motivation to combine" (cleaned up)); *In re Fulton*, 391 F.3d 1195, 1200 (Fed. Cir. 2004) (The "case law does not require that a particular combination must be the preferred, or the most desirable, combination described in the prior art in order to provide motivation for the current invention.").

Moreover, even if we assume that the proposed combination would have increased cost and complexity while decreasing reliability (*see* PO Resp. 13–14; Ex. 2050 ¶ 47), based on this record, we would still determine that an ordinarily skilled artisan would have perceived the advantages of the proposed combination to outweigh its disadvantages. *See Winner Int'l Royalty Corp. v. Wang*, 202 F.3d 1340, 1349 n.8 (Fed. Cir. 2000) ("[T]he benefits, both lost and gained, should be weighed against one another."). Mr. Keller testifies that Chu's input mechanism allows for different types of input (i.e., swipe and different levels of pressure), which would have "allow[ed] the VR viewer to provide more functionality" (Ex. 1002 ¶¶ 60–61) and that device designers seek to increase the usability of their products by accommodating different types of smartphones (*id.* ¶ 58). We credit this testimony because it is reasonable and supported by evidence of record. *See* Ex. 1004 ¶ 60 ("In some situation[s] . . . the digital device requires a 'touch-swipe' or 'touch-circle' motion rather than just a 'touch' motion at a designated location . . . ."). Accordingly, on this record, we are persuaded

that Petitioner has shown, by a preponderance of the evidence, that a person having ordinary skill in the art would perceive the combination's benefits to outweigh any alleged abstract disadvantages associated with cost, complexity, and reliability.

Finally, we note that we rely on only one of Petitioner's proposed rationales to combine Kondo and Chu (i.e., that an ordinarily skilled artisan would have been motivated to obtain the benefits of Chu's variable pressure and swipe inputs) because we are unpersuaded by the other two.

First, on balance, we are not persuaded that an ordinarily skilled artisan would have been motivated to modify Kondo to work with resistive touchscreens. Pet. 38; Ex. 1002 ¶ 58. We find that mobile phones with resistive touchscreens were significantly less common than those with capacitive touchscreens at the time of invention and trending downward. *See* Ex. 2034 (showing that resistive screens had 3.5% market share in 2013, 0.5% in 2014; and 0% in 2015); Ex. 2050 ¶¶ 48, 50, 53. We also find that resistive touchscreens had poor optical properties, which made them less desirable for use with VR. *See* Ex. 2050 ¶ 51. In view of the lack of persuasive evidence to the contrary, we credit Mr. Mackey's testimony on these issues.

Petitioner notes that a prior patent application publication and the '199 patent both contemplated accommodating different types of touchscreens, including resistive touchscreens. *See* Pet. Reply 6–7 (Ex. 1022 ¶ 50; Ex. 1001, 7:14–17, 11:24–28). We understand these passages to note, in passing, that use with various touchscreens was an ancillary benefit of their respective inventions. *See* Ex. 1022 ¶ 50; Ex. 1001, 7:14–17, 11:24–28. *But see* Ex. 1001, 5:45–46 (stating that "most smartphones have capacitive touch

sensitive displays"). Although this lends some support to Petitioner's contention that an ordinarily skilled artisan would have wanted a VR viewer to be compatible with resistive touchscreens, we are more persuaded by Patent Owner's evidence to the contrary.

Second, we are unpersuaded by Petitioner's waterproofing rationale. *See* Pet. 40; Ex. 1002 ¶¶ 62–64. Even if an ordinarily skilled artisan would have been motivated to make a waterproof VR viewer, Petitioner fails to sufficiently connect the dots between this motivation and its proposed combinations. In other words, Petitioner does not explain why a desire to make a waterproof VR viewer would have motivated an ordinarily skilled artisan to make either of the combinations of Kondo and Chu that it proposes. As noted above, Petitioner proposes replacing Kondo's remote touch circuit (e.g., button part 77 and associated conductive wire) with Chu's mechanical input mechanism (i.e., actuator mechanism 12 or 12', 12"); however, Petitioner fails to identify (and we do not discern) any relationship between this proposed substitution and Chu's waterproofing features. As *KSR* states, "it can be important to identify a reason that would have prompted a person of ordinary skill in the relevant field to combine the elements in the way the claimed new invention does." *KSR*, 550 U.S. at 418; *see also ActiveVideo Networks, Inc. v. Verizon Commc'ns, Inc.*, 694 F.3d 1312, 1328 (Fed. Cir. 2012) (finding evidence of motivation to combine to be legally insufficient because it "bears no relation to any specific combination of prior art elements" and "fails to explain why a person of ordinary skill in the art would have combined elements from specific references *in the way the claimed invention does*"). In this case, we discern no persuasive explanation as to why a person having ordinary skill in

the art would have sought to change Kondo's remote touch circuit to a movable mechanical input mechanism under the general guise of providing waterproofing.

*d. Objective Indicia of Nonobviousness*

We next consider objective indicia of nonobviousness (also known as secondary considerations). "The objective indicia of non-obviousness play an important role as a guard against the statutorily proscribed hindsight reasoning in the obviousness analysis." *WBIP, LLC v. Kohler Co.*, 829 F.3d 1317, 1328 (Fed. Cir. 2016). Objective indicia "may often be the most probative and cogent evidence in the record" and "must be considered in every case" where present. *Id.* (quotation and emphasis omitted); *see also Graham*, 383 U.S. at 36 ("[Objective indicia] may also serve to guard against slipping into use of hindsight, and to resist the temptation to read into the prior art the teachings of the invention in issue." (internal quotation marks and citation omitted)).

"In order to accord substantial weight to secondary considerations in an obviousness analysis, the evidence of secondary considerations must have a nexus to the claims, *i.e.*, there must be a legally and factually sufficient connection between the evidence and the patented invention." *Fox Factory, Inc. v. SRAM, LLC*, 944 F.3d 1366, 1373 (Fed. Cir. 2019) (citations and internal quotation marks omitted). "The patentee bears the burden of showing that a nexus exists." *Id.* A patent owner is entitled to a rebuttable presumption of nexus "when the patentee shows that the asserted objective evidence is tied to a specific product and that product 'embodies the claimed features, and is coextensive with them.'" *Id.* (citation omitted).

Alternatively, the patent owner may prove nexus "by showing that the evidence of secondary considerations is the "direct result of the unique characteristics of the claimed invention." *Id.* at 1373–74 (quotation omitted).

Patent Owner argues that evidence of copying, industry praise, long-felt need, and commercial success show that claim 1 would not have been obvious. PO Resp. 23–63; PO Sur-reply 12–19. Petitioner argues that Patent Owner fails to establish nexus, and Petitioner disagrees that the evidence indicates nonobviousness. *See* Pet. Reply 8–16.

For the reasons explained below, we find that the evidence of copying strongly indicates nonobviousness, and the evidence of industry praise also indicates nonobviousness; however, we assign little to no weight to the arguments and evidence regarding long-felt need and commercial success.

(i) Presumption of Nexus

Patent Owner appears to contend that it is entitled to a presumption of nexus for evidence relating to two products: DODOcase's[16] VR 1.2 viewer and Petitioner's GCV2 VR viewer. PO Resp. 24–54. We first address whether Patent Owner has proven that it is entitled to a presumption of nexus for either of these products before addressing the evidence relating to them in the analysis of copying and commercial success.

[16] DODOcase is a predecessor in interest of the '199 patent, and Mr. Buckley (the only named inventor) is the founder of DODOcase. *See* Ex. 1023, 16:6–7; Tr. 36:4–6.

(1) DODOcase VR 1.2 viewer

Patent Owner argues that it is entitled to a presumption of nexus for this product because the DODOcase VR 1.2 viewer meets each limitation of claim 1 and is coextensive with the claim. PO Resp. 24–33 (citing Ex. 2054 ¶¶ 5–6). Petitioner simply responds that Patent Owner's claim chart "lacks clarity, detail, and sufficient explanation." Pet. Reply 8. Petitioner also attempts to rebut the presumption by arguing that Patent Owner's evidence relates exclusively to a feature known in the prior art. *Id.* at 8–11.

We find that Patent Owner is entitled to a presumption of nexus for evidence relating to the DODOcase VR 1.2 viewer. Patent Owner's claim chart shows how this product meets each limitation of the claim, and Mr. Buckley's testimony supports Patent Owner's assertion that this product embodies claim 1 and is coextensive with it. *See* PO Resp. 24–33; Ex. 2054 ¶¶ 5–6. We credit this aspect of Mr. Buckley's testimony because, when read in conjunction with the claim chart provided in Patent Owner's Response, it is specific and particularized.[17] Also, Petitioner does not substantively dispute Patent Owner's assertions and evidence. (For example, Petitioner neither identifies a claim limitation that is not met by the

[17] Petitioner argues that we should give Mr. Buckley's testimony "little, if any, weight" because he is biased. Pet. Reply 8. We agree that Mr. Buckley is biased because he receives a material percentage of revenues associated with enforcement of the '199 patent (Ex. 1023, 124:22–126:25); however, Petitioner identifies no evidence to contradict any of his testimony. As a result, we give little to no weight to any testimony regarding subjective opinions and any testimony that is not sufficiently specific unless supported by documentary evidence; however, we give weight to testimony regarding specific unrebutted facts.

DODOcase VR 1.2 viewer, nor points to any unclaimed features.) Although Petitioner attacks the sufficiency of Patent Owner's showing (Pet. Reply 8), we determine that Patent Owner's evidence is sufficiently specific. *See Polaris Indus., Inc. v. Arctic Cat, Inc.*, 882 F.3d 1056, 1072–73 & n.7 (Fed. Cir. 2018) (finding that the patent owner's undisputed evidence was sufficient even though it lacked a claim chart). On this record, we find that the DODOcase VR 1.2 viewer embodies and is coextensive with claim 1.

Petitioner fails to rebut the presumption of nexus for this product. *See* Pet. Reply 8–11. Petitioner asserts that "[o]ne way to show a lack of nexus is if the evidence 'exclusively relates to a feature that was "*known* in the prior art,"'" but Petitioner fails to show that Patent Owner's evidence "exclusively relates" to the allegedly known concept: "a conductive/ capacitive input mechanism in general." *Id.* at 8–9 (quoting *Yita v. MacNeil IP LLC*, 69 F.4th 1356, 1364 (Fed. Cir. 2023)). Although Petitioner points to one page of Patent Owner's Response and four paragraphs of Mr. Buckley's testimony (*id.* at 9; *see id.* at 11), those passages belie Petitioner's position. Each cited passage discusses the claimed "input mechanism" specifically—which we understand to refer to element 1[d]—not a capacitive input mechanism in general. PO Resp. 33; Ex. 2054 ¶¶ 3–4, 6–7. And Petitioner never contends (or establishes) that this specific input mechanism was known in the art. For example, Petitioner fails to show that Compton discloses the "touchscreen input" recited in claim 1. *See* Pet. Reply 8–11.[18] As a result, we do not agree that Patent Owner's evidence

[18] Also, to the extent Petitioner relies upon the Kondo-Chu combination to show that the claimed input mechanism was known (*see* Pet. Reply 11), this argument is inapposite because it conflates the contents of the prior art

relating to the DODOcase VR 1.2 viewer relates exclusively to a feature known in the prior art.[19]

Accordingly, Patent Owner is entitled to a presumption of nexus for evidence relating to the DODOcase VR 1.2 viewer.[20]

(2) Petitioner's GCV2 VR viewer

Patent Owner also appears to seek a presumption of nexus for evidence related to Petitioner's GCV2 VR viewer (*see* PO Resp. 34–54), but Patent Owner fails to prove that it is entitled to this presumption. Patent Owner neither alleges that this product is coextensive with the claim, nor presents any evidence to show coextensiveness. *See id.* As a result, Patent Owner is not entitled to a presumption of nexus for this product. *See Fox Factory*, 944 F.3d at 1373 (explaining that "coextensiveness" is required for a presumption of nexus); *see also id.* ("The patentee bears the burden of

---

references (e.g., the disclosure of Kondo or Chu) with Petitioner's hypothetical combination of them. Stated differently, Petitioner cannot defeat nexus by showing that its proposed combination teaches a claim limitation—Kondo and Chu were each "known" in the art, but their combination was not.

[19] We have also considered Petitioner's argument in the context of each of our other nexus findings. For our copying and industry praise analysis, Petitioner's argument is unpersuasive for the reasons we explain here.

[20] In a related *inter partes* review proceeding (IPR2023-00707), we also found that the DODOcase VR 1.2 viewer is entitled to a presumption of nexus. This shared presumption is appropriate because the identified claims in these related patents cover essentially the same invention. *See Fox Factory*, 944 F.3d at 1377 ("[T]he claims of multiple patents can share a presumption of nexus with the same product [if] the claims of each of the patents cover[] essentially the same invention."). We do not elaborate on this point further because the parties did not raise this as an issue.

showing that a nexus exists.”).

(ii) Copying

“It is well established that copying by a competitor is a relevant consideration in the objective indicia analysis” and “may be evidence that the patented invention is nonobvious.” *Liqwd, Inc. v. L’Oreal USA, Inc.*, 941 F.3d 1133, 1137 (Fed. Cir. 2019) (citing *Iron Grip Barbell Co. v. USA Sports, Inc.*, 392 F.3d 1317, 1325 (Fed. Cir. 2004)). For this, there must be evidence of actual copying—i.e., “duplication of features of the patentee’s work based on access to that work”—not just a showing that the allegedly copied product falls within the scope of the claims. *Id.* (quoting *Institut Pasteur & Universite Pierre Et Marie Curie v. Focarino*, 738 F.3d 1337, 1347–48 (Fed. Cir. 2013)). “Evidence of access and substantial similarity *is* evidence of copying.” *Medtronic, Inc. v. Teleflex Innovations S.a.r.l.*, 70 F.4th 1331, 1340 (Fed. Cir. 2023); *see also Iron Grip Barbell*, 392 F.3d at 1325 (explaining that copying may be demonstrated through “access to, and substantial similarity to, the patented product (as opposed to the patent)”).

Patent Owner argues that Petitioner copied its invention. PO Resp. 34–54, 57–61; *see also* PO Sur-reply 14–15. In support, Patent Owner introduces evidence to show that: (1) Mr. Buckley described his idea for a capacitive button to Petitioner via email, (2) Petitioner’s employees responded that it was “genius,” “ingenious,” and “really neat,” (3) Mr. Buckley sent Petitioner a sample of its DODOcase VR 1.2 viewer, and (4) less than one year later, Petitioner released its GCV2 VR viewer, which embodies the claimed features. PO Resp. 34–54, 57–61.

Petitioner does not dispute the sequence of events alleged by Patent

Owner. *See* Pet. Reply. Instead, Petitioner responds that Patent Owner's argument fails "as a matter of law" because it compared the GCV2 VR viewer to the claims, rather than to Patent Owner's product (*id.* at 12), and Petitioner argues that there is "a remarkable difference" between the two products (*id.* at 12–13).

We begin by summarizing our findings regarding the relevant events, and then we turn to our analysis.

(1) Relevant Events

In June 2014, Petitioner announced a Google Cardboard viewer that used a magnetic switch to simulate a touch event (the "GCV1 VR viewer"). Ex. 2023 ¶¶ 21–23. DODOcase was the first company to manufacture and sell a viewer based on the GCV1 VR design, and Mr. Buckley was involved in those efforts. Ex. 2023 ¶¶ 27–28; *see* Ex. 2024, 3–4.

Mr. Buckley decided that the viewer's design could be improved by using a capacitive button rather than a magnetic one (Ex. 2023 ¶ 28), and he contacted Petitioner's employees to discuss (Ex. 2024). Specifically, in early July 2014, Mr. Buckley emailed Mr. Andrew Nartker and Mr. Clay Bavor to say: "I think we have a clever/elegant way to make a conductive tap button which has a couple advantages." Ex. 2024, 4. Mr. Nartker responded that he agreed a "[c]onductive button . . . could have benefits." *Id.* at 3 (emphasis omitted). He also stated that Petitioner had "experimented briefly with this but didn't fully refine," and he offered a meeting with Mr. Alex Kauffman "to share our tips here." *Id.* Mr. Buckley and Mr. Kauffman met the following week to discuss the conductive button. Ex. 1023, 54:13–57:21; *see also* Ex. 2024, 2 (providing meeting date). Mr.

Buckley does not recall the specific content of that meeting, and the record includes no evidence regarding what tips (if any) were shared by Mr. Kauffman on behalf of Petitioner.

Shortly after the meeting, Mr. Buckley followed-up with Mr. Nartker via email. Ex. 2024, 1–2. In that email, Mr. Buckley said:

> I am most excited by what I think is a breakthrough on a very simple conductive touch button for the cardboard viewer. Check out the attached video clips.

*Id.* at 2. The attached video clips showed a prototype (hereinafter, "Buckley's prototype")[21] and its operation. Ex. 2060; Ex. 2061; *see* Ex. 2054 ¶ 11 (testifying that Exhibits 2060 and 2061 are the attached video clips). Specifically, the videos show that Buckley's prototype is a VR viewer that includes a mechanism, actuated by pressing a button on the outside of the viewer, that causes a touch event on the center of a smartphone's touchscreen. Ex. 2060; Ex. 2061.

Mr. Kauffmann—one of Petitioner's "lead designers" (Ex. 2024, 3)—responded by saying:

> That's an ingenious button! Does it work consistently on a variety of phones? I'd love to play with it.

*Id.* at 1. Mr. Bavor and Mr. Nartker also complemented the button in Buckley's prototype, saying it "is genius" and "looks really neat!" *Id.* Approximately two months later (in September 2014), DODOcase launched a new VR viewer (the "DODOcase VR 1.2 viewer") (Ex. 2023 ¶ 7), and

---

[21] Although there are notable similarities between Buckley's prototype and the DODOcase VR 1.2 viewer, there are also differences between these devices. *Compare* PO Resp. 25–33 (showing images of the DODOcase VR 1.2 viewer), *with* Exs. 2060–2061 (showing videos of the prototype). As a result, we distinguish between them in our analysis.

Petitioner received at least one of these products in October 2014 (Ex. 2025, 1; *see also* Ex. 1023, 51:15–52:10).

Within a year, Petitioner launched a second version of its VR viewer (the "GCV2 VR viewer"). Ex. 2054 ¶ 4; *see also* Ex. 2031, 1 ("The new Cardboard was unveiled at Google I/O 2015."); Ex. 2062 (product technical specifications), 1 (dated July 2015). The GCV2 VR viewer includes a conductive button rather than a magnetic one. Ex. 2054 ¶ 4; *see also* Ex. 2062, 8–9.[22] Like Buckley's prototype and the DODOcase VR 1.2 viewer, the GCV2 VR viewer includes a mechanism, actuated by pressing a button on the outside of the viewer, that causes a touch event on the center of a smartphone's touchscreen. *See* Ex. 2054 ¶ 7; PO Resp. 34–54.

(2) Analysis

We find a nexus between Patent Owner's evidence of copying and the claimed invention. *See Wm. Wrigley Jr. Co. v. Cadbury Adams USA LLC*, 683 F.3d 1356, 1364 (Fed. Cir. 2012) ("[A] nexus between the copying and the novel aspects of the claimed invention must exist for evidence of copying to be given significant weight in an obviousness analysis."). We agree with Patent Owner that the novel aspect of its claimed invention is the input mechanism recited by claim 1 (i.e., element 1[d], which recites the claimed "touchscreen input"). *See* PO Resp. 33–34; *supra* § II.D.3.b (limitation-by-limitation analysis of claim 1); *cf.* Pet. Reply 10 (identifying the "allegedly novel features" as the claimed touchscreen input). Patent Owner's allegation is that Petitioner copied this claimed touchscreen input

[22] Unless otherwise noted, when an exhibit includes two sets of page numbering, we cite to the numbering added by a party for this proceeding.

(PO Resp. 34; *see also id.* at 57–60, 63), and the events summarized above are relevant to evaluating that allegation. In addition, we find that Buckley's prototype,[23] the DODOcase VR 1.2 viewer, and the GCV2 VR viewer each include a component that qualifies as the claimed touchscreen input. *See* PO Resp. 30–33, 51–54;[24] Ex. 2054 ¶¶ 5–7; Ex. 2060; Ex. 2061. As before, Petitioner's argument that Patent Owner fails to show nexus (*see* Pet. Reply 8–11) is not persuasive because Petitioner fails to show that the claimed touchscreen input mechanism (i.e., element 1[d]) was known in the prior art. *See also id.* at 11 (Petitioner characterizing the claimed touchscreen input as "the only allegedly novel feature[] that could form the basis of a secondary considerations case").

We also find that Petitioner had access to Buckley's prototype and the DODOcase VR 1.2 viewer before releasing its GCV2 VR viewer. *See Iron Grip Barbell*, 392 F.3d at 1325 (explaining that copying may be demonstrated through "access to, and substantial similarity to, the patented product"). The record shows that Petitioner's employees had access to Buckley's prototype in late-July 2014 (Ex. 2024, 2; Ex. 2060; Ex. 2061; Ex. 2054 ¶ 11) and the DODOcase VR 1.2 viewer in October 2014 (Ex. 2025, 1). The record also shows that Petitioner released its GCV2 VR

---

[23] The videos of the prototype show that its input includes a button accessible from an exterior of the VR housing and a strip of material inside the housing. Ex. 2060; Ex. 2061. When the prototype's button is pressed, the interior portion moves, which causes a portion of the surface of the material to contact the center of a smartphone's touchscreen. Ex. 2061. The strip of material maps to the "touchscreen input" recited in the claim.

[24] Patent Owner's claim chart refers to documents included in the record as Exhibits 2062 and 2063. *See* PO Resp. 34–54; Ex. 2054 ¶¶ 22–23.

viewer less than a year later. Ex. 2031, 1; Ex. 2062, 1.

In addition, contemporaneous emails provide circumstantial evidence of copying. One email states that Petitioner "experimented briefly" with a conductive button before talking to Mr. Buckley (Ex. 2024, 3), but the record includes no evidence of any of Petitioner's prior designs or ideas. However, after receiving videos of Buckley's prototype, three of Petitioner's employees complimented Mr. Buckley's design. *Id.* at 1–2. In fact, one of Petitioner's "lead designers," Mr. Kauffmann (*id.* at 3), said: "That's an ingenious button!" (*id.* at 1). Given Mr. Kauffmann's role, we are persuaded that Mr. Kauffman was aware of Petitioner's prior efforts to design an input button, and that he found Mr. Buckley's design to be materially different and an improvement over prior ideas or designs. Also, the record includes no evidence regarding Petitioner's development of the GCV2 VR viewer and, as a consequence, does not indicate that Petitioner independently developed the touchscreen input used in its product.

We further find that the touchscreen inputs of the DODOcase VR 1.2 viewer and the GCV2 VR viewer are substantially similar in relevant respects. *See Iron Grip Barbell*, 392 F.3d at 1325 (explaining that copying may be demonstrated through "access to, and substantial similarity to, the patented product"). In both devices, an external button is pressed, causing the touchscreen input to move forward so that only a portion of its conductive material contacts the center of a mobile phone's touchscreen, thereby simulating a capacitive touch event. *See* PO Resp. 30–33 (DODOcase VR 1.2 viewer), 51–54 (GCV2 VR viewer); Ex. 2062, 8–9 (showing GCV2 VR viewer's conductive strip and pillow); *see also* IPR2023-00707, Paper 49, 61–62, 92.

There are also differences between the products' touchscreen inputs, but these differences constitute minor, non-material modifications. The two differences are: (1) in the DODOcase VR 1.2 viewer, the internal portion attaches to the top and bottom of the housing and flexes forward, where in the GCV2 VR viewer, the internal portion attaches only to the top and swings forward (*see* Pet. Reply 12–13), and (2) the GCV2 VR viewer's input mechanism includes a conductive pillow, where the DODOcase VR 1.2 viewer instead includes a flexible and conductive thin strip of material. *See* PO Resp. 30–33, 51–54; Ex. 2062, 8–9; *see also* IPR2023-00707, Paper 49, 61–62, 64–65, 92. These differences change the touchscreen input's method of attachment and materials, but neither alters its fundamental features. Indeed, as Patent Owner shows, both devices include the "touchscreen input" recited in the claim. *See* PO Resp. 30–33, 51–54. Petitioner does not explain why either difference is allegedly important, and we do not agree that copying requires an exact replica with no differences. *See* Pet. Reply 12–13. Accordingly, we determine these minor modifications do not undercut Patent Owner's evidence showing that Petitioner copied the touchscreen input.

Additionally, we note that the touchscreen inputs of Buckley's prototype and the GCV2 VR viewer are also substantially similar in relevant respects. In both devices, an external button is pressed, causing the touchscreen input to move forward so that only a portion of its conductive material contacts the center of a mobile phone's touchscreen, thereby simulating a capacitive touch event. Ex. 2060; Ex. 2061; *see* PO Resp. 51–54; *see also* IPR2023-00707, Paper 49, 92. Again, there are differences between these input mechanisms (i.e., the differences identified above), but

these differences constitute minor, non-material modifications that do not alter the fundamental features of the touchscreen input.

Finally, we do not agree with Petitioner's argument that Patent Owner's analysis is legally insufficient. *See* Pet. Reply 12. Petitioner correctly notes that a comparison between a product and the claim is insufficient to show copying. *See Medtronic, Inc. v. Teleflex Innovations S.a.r.l.*, 70 F.4th 1331, 1340 (Fed. Cir. 2023) (explaining that copying requires "actual evidence of copying efforts" so that the "infringement and copying inquiries" do not collapse into a single analysis (quoting *Liqwd*, 941 F.3d at 1137)). But, as we have explained above, Patent Owner's evidence also shows "access and similarity to a patented product." *Id.* (quoting *Liqwd*, 941 F.3d at 1337). As a result, Patent Owner's analysis is sufficient.

Accordingly, we find that Patent Owner has shown copying. The Federal Circuit has said that copying can be strong evidence of nonobviousness. *Volvo Penta of the Americas, LLC v. Brunswick Corp.*, 81 F.4th 1202, 1213 (Fed. Cir. 2023) ("[A]lthough copying is not alone dispositive of nonobviousness, [the Federal Circuit has] usually considered a determination of copying to be 'strong evidence of nonobviousness.'" (quoting *Panduit Corp. v. Dennison Mfg. Co.*, 774 F.2d 1082, 1099 (Fed. Cir. 1985))). *But see Ecolochem, Inc. v. S. California Edison Co.*, 227 F.3d 1361, 1380 (Fed. Cir. 2000) ("[A] showing of copying is only equivocal evidence of non-obviousness in the absence of more compelling objective indicia of other secondary considerations."). On this record, given the facts of this proceeding, we are persuaded that Patent Owner's evidence of copying is strong evidence of nonobviousness.

(iii) Industry Praise

"Evidence that the industry praised a claimed invention or a product that embodies the patent claims weighs against an assertion that the same claimed invention would have been obvious" because "[i]ndustry participants, especially competitors, are not likely to praise an obvious advance over the known art." *Apple Inc. v. Samsung Elecs. Co.*, 839 F.3d 1034, 1053 (Fed. Cir. 2016) (en banc). Industry praise can be established with awards, articles, and/or emails. *See WBIP*, 829 F.3d at 1335; *see also Apple*, 839 F.3d at 1053–54 (relying on "internal documents from the patentee's top competitor").

Patent Owner argues that Petitioner's employees praised the invention. *See* PO Resp. 33–34; *see also id.* at 23–24. In support, Patent Owner appears to rely on the email chain found in Exhibit 2024, and Patent Owner also contends that the "genuineness of [Petitioner's] praise is shown by its decision soon thereafter to copy DODOcase." *Id.* at 34.

Petitioner responds that the email communications show encouragement and support for its "then-business partner," not praise. Pet. Reply 14. In support, Petitioner points to evidence that Petitioner provided suppliers, technical input, marketing opportunities, advertising, and more to Mr. Buckley and DODOcase. *Id.* (citing Ex. 1023, 25:2–11, 45:17–19, 47:1–62:9, 74:18–79:14, 82:12–83:5; Ex. 1026, 1–2).

We are persuaded that Patent Owner has shown a nexus for this evidence. Although Patent Owner is not entitled to a presumption of

nexus,[25] we are persuaded that the alleged praise "is the direct result of the unique characteristics of the claimed invention." *Fox Factory,* 944 F.3d at 1373–74 (quotation omitted). Mr. Buckley stated that he had a "breakthrough on a very simple conductive touch button," shown in "attached video clips" of Buckley's prototype. Ex. 2024, 2. As explained above (*supra* § II.D.3.d.ii (addressing copying arguments)), those video clips show a prototype VR viewer that includes the claimed input mechanism. Ex. 2060; Ex. 2061. Petitioner's employees specifically commented on this aspect of Buckley's prototype (Ex. 2024, 1), and Patent Owner relies upon those comments to show industry praise. Moreover, Petitioner's argument that Patent Owner fails to show nexus (*see* Pet. Reply 8–11) is not persuasive because Petitioner fails to show that the claimed touchscreen input mechanism (i.e., element 1[d]) was known in the prior art. Accordingly, we find that Patent Owner has established the requisite nexus.

On this record, we give the evidence of praise moderate weight. Although three of Petitioner's employees complimented Mr. Buckley's button (*see* Ex. 2024, 1), it is important to consider the context in which those statements were made. The compliments were provided directly to Mr. Buckley, and at the time, there was an on-going and evolving business relationship between Petitioner and DODOcase. *E.g.*, Ex. 2024; Ex. 1023,

---

[25] The email chain in Exhibit 2024 relates to Buckley's prototype, not the DODOcase VR 1.2 viewer that was launched a few months later. *Compare* Ex. 2024, 1–2 (emails sent in July 2014), *with* Ex. 2023 ¶ 7 (VR 1.2 viewer launched in September 2014). Because Patent Owner does not show that Buckley's prototype embodies and is coextensive with claim 1, Patent Owner is not entitled to a presumption of nexus for this device. *See Fox Factory*, 944 F.3d at 1373.

58:10–59:10, 61:20–62:5, 74:18–24. As a result, Petitioner's employees had interpersonal and business reasons for responding positively to Mr. Buckley's email, making the emails somewhat less probative of the type of praise that shows nonobviousness. *Cf. Apple*, 839 F.3d at 1053 (explaining that industry praise is probative because the industry is unlikely to praise an obvious advance). Indeed, Mr. Buckley began the discussion by referencing a "breakthrough," and in context, Mr. Nartker's response (i.e., "That button looks really neat!") is a polite response rather than praise. Ex. 2024, 1–2. However, the other two remarks went beyond a polite response to something more effusive, stating "That's an ingenious button!" and "That button is genius." *Id.* at 1. We find these compliments to be somewhat indicative of praise—they are effusive compliments rather than simply polite responses, but their effusiveness is somewhat offset by the context in which they were made.

We consider and address Patent Owner's allegations regarding copying above in a separate section. *Supra* § II.D.3.d.ii; *cf.*, *e.g.*, *Apple*, 839 F.3d at 1053–54 (addressing industry praise and copying separately even though the patentee relied on the same evidence for both).

Accordingly, we give the evidence of industry praise moderate weight in support of nonobviousness.

(iv) Long-Felt Need

"Evidence of a long-felt but unresolved need can weigh in favor of the non-obviousness of an invention because it is reasonable to infer the need would not have persisted had the solution been obvious." *Apple*, 839 F.3d at 1056.

Patent Owner contends that the claimed invention addressed a long-felt need. PO Resp. 54–58. In support, Patent Owner identifies four prior VR viewers, none of which included the input mechanism recited in claim 1. *Id.* at 54–56 (citing Ex. 2054 ¶¶ 12–13, 15–16). Also, according to Patent Owner, Petitioner recognized a need for an improved input mechanism, as shown by the fact that it included a magnetic button in its GCV1 VR viewer in 2014. *Id.* at 57 (citing Ex. 2023 ¶¶ 22–26). Patent Owner asserts that Petitioner's employees' emails also demonstrate that Petitioner perceived a long-felt, unresolved need. *Id.* at 58 (citing Ex. 2024, 3–4); *see id.* at 59 (citing Ex. 2024, 1; Ex. 2023 ¶¶ 4–6).[26]

According to Petitioner, Patent Owner's argument "fails as a matter of law" because "conductive/capacitive input mechanisms for VR viewers were known." Pet. Reply 11 (citing *Geo. M. Martin Co. v. Alliance Machine Sys. Int'l LLC*, 618 F.3d 1294, 1304–05 (Fed. Cir. 2010)). Petitioner also argues that Patent Owner's evidence relates exclusively to a feature that was known in the prior art. *Id.* at 8–11 (*cited in* Pet. Reply 11).

We are not persuaded by Patent Owner's long-felt need arguments because Patent Owner does not identify any alleged "need." For example, Patent Owner identifies no known problems with existing techniques or desire for something not provided by those techniques. Even if we agree that prior VR viewers lacked the input mechanism recited in Patent Owner's claims (*see* PO Resp. 54–56), this alone does not show a long-felt need. *See Iron Grip Barbell*, 392 F.3d at 1324–25 (rejecting a substantially similar

[26] Patent Owner also cites to Exhibit 2004, its district court complaint, but this exhibit is not probative of objective indicia. Patent Owner's allegations in that complaint are not evidence of their truth. *Accord* Inst. Dec. 41 n.16.

argument).

Also, Patent Owner also fails to sufficiently show a nexus between its evidence and the claimed invention. For example, even if there were a need for a conductive button to interact with a smartphone's touchscreen (*see* PO Resp. 57 (citing Ex. 2023 ¶ 26)), such a conductive button was known, as shown by Kondo (Ex. 1003). *See* Pet. Reply 11; *see also id.* at 8–11. In addition, we do not agree that Petitioner's brief experimentation with a conductive button (Ex. 2024, 3; *see* PO Resp. 58) necessarily shows either long-felt need or any failure by Petitioner. Importantly, here, there is no evidence regarding the substance of any such experimentation by Petitioner.

Accordingly, we give little to no weight to Patent Owner's arguments and evidence regarding long-felt need.

(v) Commercial Success

"When a patentee can demonstrate commercial success, usually shown by significant sales in a relevant market, and that the successful product is the invention disclosed and claimed in the patent, it is presumed that the commercial success is due to the patented invention." *J.T. Eaton & Co. v. Atlantic Paste & Glue Co.*, 106 F.3d 1563, 1571 (Fed. Cir. 1997). "Commercial success is relevant because the law presumes an idea would successfully have been brought to market sooner, in response to market forces, had the idea been obvious to persons skilled in the art." *Galderma Labs., L.P. v. Tolmar, Inc.*, 737 F.3d 731, 740 (Fed. Cir. 2013) (quoting *Merck & Co. v. Teva Pharm. USA, Inc.*, 395 F.3d 1364, 1376 (Fed. Cir. 2005)).

Patent Owner argues that the commercial success of the DODOcase

VR 1.2 viewer and the GCV2 VR viewer weigh in favor of nonobviousness. PO Resp. 60–62. We address these products separately.

(1) DODOcase VR 1.2 viewer

Patent Owner alleges that the DODOcase VR 1.2 viewer was commercially successful because DODOcase received approximately $68,000 of revenue for this product as well as approximately $217,000 of revenue for a "Virtual Reality Cardboard Toolkit," for a total of approximately 10,000 sales. PO Resp. 60–61 (citing Ex. 2054 ¶¶ 18–19; Ex. 2055; Ex. 2056).

Petitioner argues that Patent Owner cannot show that these sales were "solely due to a conductive/capacitive input mechanism" because the DODOcase VR 1.2 viewer was part of the Works With Google Cardboard (WWGC) program, which "drove sales . . . , as admitted by Mr. Buckley." Pet. Reply 16 (citing Ex. 1023, 58:12–59:15, 77:15–78:6); *see also id.* at 14–15.

Patent Owner responds that it is entitled to a presumption of nexus between increased sales and the claimed invention, and that Petitioner presents no evidence that increased shipments were driven by unclaimed features. PO Sur-reply 16–17.

We presume a nexus between Patent Owner's evidence of sales of the DODOcase VR 1.2 viewer and the claimed invention. *See supra* § II.D.3.d.i (addressing presumption of nexus). However, having considered the evidence, we are not persuaded that the sales are indicative of the type of commercial success that tends to show nonobviousness.

First, we find that Patent Owner has only established approximately

$68,000 in revenue for sales of the DODOcase VR 1.2 viewer. *See* PO Resp. 60; Ex. 2055 (revenue for "Virtual Reality Cardboard Toolkit – V1.2"). Although Patent Owner attempts to rely on an additional $217,000 in revenue, we find that Patent Owner fails to sufficiently connect that revenue with the DODOcase VR 1.2 viewer. *See* PO Resp. 60–61. In particular, Patent Owner points to the revenue associated with the "Virtual Reality Cardboard Toolkit," but the evidence distinguishes between those sales and sales of the "Virtual Reality Cardboard Toolkit – V1.2," indicating that the former is not the same as the latter. *See* Ex. 2055; Ex. 2056. Patent Owner cites Mr. Buckley's testimony, but we do not find his testimony on this point to be credible given his bias coupled with the lack of specificity, certainty, and supporting documentary evidence. *See* Ex. 2054 ¶ 18 (testifying regarding his "belie[f]" based on his recollection of events without supporting details or documentary evidence); *supra* n.17 (addressing Mr. Buckley's bias). Moreover, even if we credited this testimony, Mr. Buckley indicates that the revenue at issue likely included sales of other products, but Patent Owner fails to provide any way to estimate the revenue associated with sales of the VR 1.2 viewer alone. *See* Ex. 2054 ¶ 18 (testifying that he "believe[s] that a *significant* portion of [the] $216k revenue is attributable to the Version 1.2 Viewer" (emphasis added)).

Second, whether or not we include the additional $217,000 in revenue, we are not persuaded that Patent Owner has shown commercial success. Patent Owner's evidence shows (at best) 10,000 units sold for a total of $285,000 over nine months. Standing alone, this shows that the product was *sold*, but not that it was a commercial *success*. Patent Owner fails to provide any context for these numbers, such as comparison sales data

for other VR viewers (such as its first VR viewer) or market share data. *See In re Huang*, 100 F.3d 135, 140 (Fed. Cir. 1996) (stating that "evidence related solely to the number of units sold provides a very weak showing of commercial success, if any"). *But see Chemours Co. FC, LLC v. Daikin Indus., Ltd.*, 4 F.4th 1370, 1378 (Fed. Cir. 2021) ("[M]arket share data, though potentially useful, is not required to show commercial success."). Moreover, other evidence indicates that these sales were, in fact, quite modest. Specifically, Patent Owner introduces an article stating that, in one year, Petitioner shipped *one hundred times* more first generation VR viewers (which lack the claimed feature). *See* Ex. 2057, 1–2 (article stating that Petitioner shipped 1,000,000 viewers, which "demonstrat[es] impressive demand").

For these reasons, we do not find that the sales of the DODOcase VR 1.2 viewer are indicative of commercial success, and we assign little to no weight to this evidence.

(2) GCV2 VR viewer

Patent Owner also argues that the GCV2 VR viewer was commercially successful. PO Resp. 62. Patent Owner submits that Petitioner's quarterly shipments of VR viewers increased nearly ten-fold after the GCV2 VR viewer's introduction, and that it sold a total of nine million units in less than two years. *Id.* (citing Ex. 2057; Ex. 2058; Ex. 2059; Ex. 2054 ¶ 20).

Petitioner responds that Patent Owner relies on articles published by third parties, and that the figures therein may include sales for other WWGC members (who may or may not have used capacitive input mechanisms).

Pet. Reply 15–16 (citing Ex. 1023, 147:4–153:3, 168:8–25; Ex. 2031, 3).[27] Petitioner also introduces sales numbers (*see* Ex. 1024), and Petitioner asserts that there was a "modest increase" in sales with the introduction of the GCV2 VR viewer "due to the continued growth of the WWGC program." Pet. Reply 15–16.

According to Patent Owner, it is entitled to a presumption of nexus, and it also "provided evidence that the increased shipments were driven by switching from a magnet input to an improved capacitive input mechanism." PO Sur-reply 16–18. Patent Owner also argues that Petitioner's sales numbers fail to "distinguish between different viewer types (i.e., magnet or capacitive)." *Id.* at 19.

Having considered the parties' arguments and evidence, we determine that Patent Owner fails to sufficiently show a nexus between this evidence and the claimed invention. *See Fox Factory*, 944 F.3d at 1373 ("The patentee bears the burden of showing that a nexus exists"). As a result, we give little to no weight to this evidence.

Initially, we note that Patent Owner is not entitled to a presumption of nexus for this evidence. Although Patent Owner shows that the GCV2 VR viewer embodies the claimed features, Patent Owner fails to show that this product is also coextensive with the claim. *See supra* § II.D.3.d.i; *see also Fox Factory*, 944 F.3d at 1373 (explaining that "coextensiveness" is required for a presumption of nexus).

Nor has Patent Owner shown that the identified sales are "the direct result of the unique characteristics of the claimed invention." *Fox Factory*,

---

[27] Petitioner cites to Exhibit 2043 rather than Exhibit 2031, but the record includes no Exhibit 2043. We have corrected this typographical error.

944 F.3d at 1373–74 (internal quotation marks omitted). Although Patent Owner attempts to make this showing in its Sur-reply (*see* PO Sur-reply 17–18), the argument is untimely and forfeit because it is not fairly responsive to the Reply. *See* PO Resp. 62 (addressing sales figures but not cause of sales); Paper 32, 9 (cautioning that arguments not raised in Response may be deemed waived); 37 C.F.R. § 42.23(b); Trial Practice Guide 73–74.

Further, even if the argument had been timely raised, we would not have been persuaded by it. Patent Owner asserts that the increased shipments of Petitioner's VR viewers "were driven by switching from a magnet input to an improved capacitive input mechanism" (PO Sur-reply 17), but Patent Owner does not show the alleged causality (*see id.* at 17–18). Patent Owner relies on Mr. Buckley's testimony that capacitive touch buttons were "adopted by pretty much everyone in the market" because of their advantages. *Id.* (quoting Ex. 1023, 159:7–15; citing Ex. 2024, 4; Ex. 2031; Ex. 1023, 25:19–27:4, 159:16–25); *see also id.* at 19 (arguing that Mr. Buckley's testimony "remains the only actual evidence"). However, Mr. Buckley's testimony lacks specificity, supporting details, and documentary evidence, so we do not credit it. *See supra* n.17 (addressing Mr. Buckley's bias). Moreover, his testimony does not persuasively show that the design was adopted *because* it included the claimed input mechanism—correlation does not imply causation.

Finally, even if we had found a nexus between the GCV2 VR viewer and the claimed invention, Patent Owner fails to sufficiently identify sales figures for that product in particular. Patent Owner's evidence consists of three articles with sales information (*see* Exs. 2057–2059); however, Mr. Buckley testified that he did not know whether the articles include sales by

other members of the WWGC program, or whether they are limited to sales of Petitioner's viewers (i.e., GCV1 and GCV2). *See* Ex. 1023, 146:21–153:3, 168:8–25. That ambiguity is particularly problematic because we do not know whether other WWGC viewers included the claimed input mechanism. *Cf. id.* at 96:6–106:15. Indeed, Petitioner specifically authorized WWGC members to include different kinds of input mechanisms in the second version of the VR viewers, including a magnetic input such as was used in GCV1. Ex. 2031, 3 ("V2 Manufacturer's Guide" stating that the "viewer can use different types of inputs, from a simple smartphone screen touch, conductive and capacitive inputs, to Bluetooth-based buttons, magnets and so on."). Finally, Petitioner's sales information (*see* Ex. 1024) similarly fails to clearly identify revenue associated with the GCV2 VR viewer specifically, as opposed to other WWGC viewers. *See* PO Sur-reply 19; *see also* Tr. 73:3–13 (stating that "[t]here's no concrete way" to use the exhibit to determine "what the sales of GCV2 were").

Accordingly, Patent Owner fails to sufficiently show a nexus between Petitioner's VR viewer sales and the claimed invention, so we give little to no weight to this evidence.

(vi) <u>Other</u>

To the extent Patent Owner advances other arguments regarding objective indicia, those arguments are not persuasive. For example, although Patent Owner contends that Petitioner also "induced" copying by a third-party, Mattel (PO Resp. 62–63), this argument is not persuasive because Patent Owner fails to establish nexus between its evidence and claim 1. Patent Owner alleges copying by Mattel, arguing that its button is

"*similar to* DODOcase's" (*id.* (emphasis added)), but an unspecified similarity is insufficient. Patent Owner fails to provide any details regarding the structure or operation of Mattel's button, and it fails to indicate that Mattel's button qualifies as the "input mechanism" required by claim 1. *See* Ex. 2054 ¶¶ 24–26; Ex. 2066; Ex. 2067.[28] Patent Owner also does not show that any alleged copying is the direct result of unique characteristics of the claimed invention.

*e. Conclusion on Claim 1*

Weighing the record as a whole in view of the findings and analysis above, we conclude that Petitioner has not met its burden to show, by a preponderance of the evidence, that independent claim 1 would have been obvious over Kondo and Chu. Petitioner establishes that an ordinarily skilled artisan would have had a motivation to replace Kondo's input mechanism with Chu's actuator mechanism (12 or 12', 12") in order to accommodate variable pressure and swipe inputs, and Petitioner shows that these proposed combinations of Kondo and Chu teach each limitation of the claim. But Patent Owner establishes copying by Petitioner (which we weigh heavily) and industry praise (which we give moderate weight). On balance, Patent Owner's evidence tending to show nonobviousness outweighs Petitioner's evidence of obviousness. In particular, we find that Petitioner fails to show that the subject matter of claim 1 would have been obvious

[28] We do not consider the video referenced in Mr. Buckley's declaration (*see* Ex. 2054 ¶ 26) because it was not submitted as evidence. *See* 37 C.F.R. § 42.63(a) ("All evidence must be filed in the form of an exhibit.").

because Petitioner's evidence is outweighed by Patent Owner's evidence of copying.

Accordingly, we determine that Petitioner has not shown by a preponderance of the evidence that claim 1 is unpatentable.

*4. Dependent Claims 2, 4–6, and 17–26*

Claims 2, 4–6, and 17–26 depend (directly or indirectly) from claim 1. Petitioner contends that the subject matter of these claims would have been obvious over Kondo and Chu, and its challenge to these claims relies on its showing for claim 1. *See* Pet. 81–95.

As explained above, Petitioner has not shown that claim 1 would have been obvious over Kondo and Chu. As a result, the premise for Petitioner's challenge to dependent claims 2, 4–6, and 17–26 has not been established. *See, e.g.*, *Ortho-McNeil Pharm., Inc. v. Mylan Labs., Inc.*, 520 F.3d 1358, 1365 (Fed. Cir. 2008) ("[D]ependent claims are nonobvious if the independent claims from which they depend are nonobvious." (quoting *In re Fritch*, 972 F.2d 1260, 1266 (Fed. Cir. 1992))).

Accordingly, we determine that Petitioner has not shown by a preponderance of the evidence that any of claims 2, 4–6, and 17–26 are unpatentable.

*5. Independent Claim 30*

Petitioner contends that the subject matter of independent claim 30 would have been obvious over Kondo and Chu. Pet. 95–101. In support, Petitioner relies upon its analysis of independent claim 1 for most of the elements of claim 30 (*id.* at 95–96, 101), and for element 30(d), Petitioner contends that the Kondo-Chu combination discloses a user input accessible

from outside the housing and movable between a first position and a second position (*id.* at 96–101). *See also id.* at 38–45 (articulating rationale to combine references), 45–81 (analyzing claim 1).

Patent Owner contends that Petitioner fails to show that an ordinarily skilled artisan would have been motivated to combine Kondo and Chu, as explained in connection with claim 1. PO Resp. 22. Patent Owner does not present other arguments regarding claim 30. *See id.*

We are persuaded that each of the Kondo-Chu combinations disclose each limitation of claim 30. *See* Pet. 95–101 (citing *id.* at 45–77). In particular, we find that Kondo discloses elements 30(a),[29] 30(b), and 30(c). Kondo describes a virtual reality viewer with attachment 2 that holds smartphone 1500 such that its touchscreen 1506 is horizontally centered and directly within the user's view when looking through lenses 7L, 7R. *See, e.g.*, Ex. 1003 ¶¶ 21–23, 27, Figs. 1, 3, 7. Lenses 7L, 7R face the same direction and are spaced apart in a horizontal direction, and smartphone 1500 and lenses 7L,7R are on opposite sides of attachment 2. *See, e.g.*, Ex. 1003 ¶ 22, Abstr., Figs. 1, 6. Also, each of the Kondo-Chu combinations disclose elements 1(d) and 1(e). Chu's actuator mechanism (12 or 12', 12") includes button 16 and probe pad 30. *See, e.g.*, Ex. 1004 ¶¶ 40–41, Figs. 3–4. The actuator mechanism is accessible from outside the housing via button 16 and has an at rest position and an actuation position. *See, e.g.*, *id*. In the combinations, when actuator mechanism is in the actuation position, only a portion of the surface of probe pad 30 contacts a

[29] Petitioner has sufficiently shown that Kondo discloses the preamble (i.e., element 30(a)), so we need not determine whether the preamble is limiting. *See Vivid Techs.*, 200 F.3d at 803.

central region of the touchscreen. *See, e.g.*, Ex. 1003 ¶¶ 27–28, 41, Fig. 3; Ex. 1004 ¶¶ 41, 48–49, 55, 58, 62, Figs. 3–4, 7a, 9a.

We are also persuaded that an ordinarily skilled artisan would have been motivated to combine Kondo and Chu with a reasonable expectation of success. In particular, we find that the ordinarily skilled artisan would have been motivated to replace Kondo's input mechanism with Chu's actuator mechanism (12 or 12', 12") in order to allow a wider range of input types (i.e., variable pressure inputs and swipe inputs). *See supra* § II.D.3.c (providing detailed analysis and support for findings regarding the rationale to combine). Patent Owner's contrary arguments are unavailing for the reasons explained in connection with claim 1. *See id.*

We do not accord substantial weight to any objective indicia of nonobviousness when evaluating this claim because Patent Owner fails to show a nexus between its evidence and this claim. *See Volvo Penta*, 81 F.4th at 1210 ("For objective evidence of secondary considerations to be relevant, there must be a nexus between the merits of the claimed invention and the objective evidence."); *Fox Factory*, 944 F.3d at 1373 ("The patentee bears the burden of showing that a nexus exists." (citation omitted)). Although Patent Owner argued objective indicia of nonobviousness for independent claim 1, it chose not to do so for independent claim 30. *See* Tr. 59:16–60:8 (when asked about the applicability of these arguments to other claims, stating that Patent Owner "chose what claims to focus on in [its] briefing"); *also cf.* PO Resp. 24–54 (addressing only claim 1), 63 (same); PO Sur-reply 12 (same), 15 (same). We hold Patent Owner to its chosen strategy.

In sum, we are persuaded that a person of ordinary skill in the art would have been motivated to combine Kondo and Chu in the manner proposed by Petitioner, and we are also persuaded that each of the Kondo-Chu combinations disclose each limitation of claim 30. We do not accord weight to any objective indicia of nonobviousness.[30] Accordingly, we determine that Petitioner has shown, by a preponderance of the evidence, that the subject matter of independent claim 30 would have been obvious over Kondo and Chu.

*6. Dependent Claims 34, 35 and 37–39*

Claims 34, 35, and 37–39 depend (directly or indirectly) from independent claim 30. Petitioner contends that the subject matter of these claims would have been obvious over Kondo and Chu, and its challenge to these claims relies on its showing for claim 30. *See* Pet. 101–103.

Patent Owner does not separately dispute these contentions. *See* PO Resp. 22–23.

Having considered the record, we are persuaded by Petitioner's undisputed showing that each additionally-recited limitation of dependent claims 34, 35, and 37–39 would have been obvious over the proposed Kondo-Chu combinations. Regarding claim 34, Kondo's attachment 2 surrounds lenses 7L, 7R and touchscreen 1506 on at least two sides, and the Kondo-Chu combinations have a cut-out through which actuator mechanism

[30] In our analysis of claim 1, we determine that Petitioner fails to show obviousness because the objective indicia of nonobviousness outweighs Petitioner's showing. For claim 30, we reach the opposite conclusion because we give no weight to objective indicia when evaluating this claim.

(12 or 12', 12") is accessible. *See, e.g.*, Ex. 1003, Figs. 1, 4; Ex. 1004, Figs. 2–4; *see also* Pet. 84–86, 88 (*cited in* Pet. 101). Regarding claims 35 and 37–39, Chu's actuator mechanism (12 or 12', 12") activates a capacitive touchscreen when the user presses its button 16. *See, e.g.*, Ex. 1004 ¶¶ 11, 53–56, 59, 62; *see also* Pet. 102–103 (citing, *inter alia*, Pet. 81–83).

In addition, as explained above, we find that the proposed Kondo-Chu combination teaches the requirements of independent claim 30, and we find that an ordinarily skilled artisan would have been motivated to combine these references as proposed. *See supra* §§ II.D.3.c (addressing motivation to combine Kondo and Chu), II.D.5 (addressing claim 30).

Accordingly, we conclude that Petitioner has shown, by a preponderance of the evidence, that the subject matter of claims 34, 35, and 37–39 would have been obvious over Kondo and Chu.

## III. MOTION TO EXCLUDE

Petitioner filed a motion to exclude: Exhibits 2017, 2020, and 2035; paragraphs 10, 12, 13, 15, and 16 of Exhibit 2033; and the portions of Patent Owner's preliminary response (Paper 13) and pre-institution sur-reply (Paper 20) that rely upon those exhibits or paragraphs. Paper 66. Patent Owner opposed this motion (Paper 68), and Petitioner filed a reply in support (Paper 70).

We dismiss this motion as moot. The identified evidence was introduced pre-institution by Patent Owner to support its argument that institution should be denied for failure to name all real parties in interest. We disagreed, and we instituted trial. *See* Inst. Dec. 35–43. Neither party asked us to revisit that determination at trial, and none of this evidence was

cited or relied upon in the merits papers. We also have not considered this evidence in this Decision. As a result, Petitioner's motion to exclude this evidence is dismissed is moot. *See* Trial Practice Guide 79–80 ("In the Board's experience, consideration of the objected-to evidence is often unnecessary to resolve the patentability of the challenged claims, and the motion to exclude is moot.").

## IV. CONCLUSION[31]

Based on the evidence presented with the Petition, the evidence introduced during the trial, and the parties' respective arguments, Petitioner has shown by a preponderance of the evidence that claims 30, 34, 35, and 37–39 are unpatentable, but Petitioner has not shown by a preponderance of the evidence that any of claims 1, 2, 4–6, and 17–26 are unpatentable.

---

[31] Should Patent Owner wish to pursue amendment of the challenged claims in a reissue or reexamination proceeding subsequent to the issuance of this decision, we draw Patent Owner's attention to the April 2019 *Notice Regarding Options for Amendments by Patent Owner Through Reissue or Reexamination During a Pending AIA Trial Proceeding*, 84 Fed. Reg. 16,654 (Apr. 22, 2019). If Patent Owner chooses to file a reissue application or a request for reexamination of the challenged patent, we remind Patent Owner of its continuing obligation to notify the Board of any such related matters in updated mandatory notices. *See* 37 C.F.R. § 42.8(a)(3), (b)(2).

In summary:

| Claims | 35 U.S.C. § | Reference(s)/ Basis | Claims Shown Unpatentable | Claims Not Shown Unpatentable |
|---|---|---|---|---|
| 1, 2, 4–6, 17–26, 30, 34, 35, 37–39 | 103 | Kondo, Chu | 30, 34, 35, 37–39 | 1, 2, 4–6, 17–26 |

## V. ORDER

It is:

ORDERED that claims 30, 34, 35, and 37–39 of U.S. Patent No. 10,528,199 B2 are determined to be unpatentable;

FURTHER ORDERED that claims 1, 2, 4–6, and 17–26 of U.S. Patent No. 10,528,199 B2 are not determined to be unpatentable;

FURTHER ORDERED that Petitioner's Motion to Exclude (Paper 66) is *dismissed* as moot;

FURTHER ORDERED that, because this is a Final Written Decision, parties to the proceeding seeking judicial review of the decision must comply with the notice and service requirements of 37 C.F.R. § 90.2; and

FURTHER ORDERED that the parties shall jointly email a proposed redacted version of this paper no later than 14 days from the entry of this Decision to Trials@uspto.gov, and if no redacted version is received within that time period, this Decision shall be made public.

FOR PETITIONER:

Michael Kiklis
KIKLIS LAW FIRM, PLLC
mike@kiklislaw.com

Mark Liang
O'MELVENY & MYERS LLP
mliang@omm.com

FOR PATENT OWNER:

Cortney Alexander
KENT & RISLEY LLC
cortneyalexander@kentrisley.com

Timothy Haller
HALLER LAW PLLC
haller@haller-iplaw.com