UNITED STATES DISTRICT COURT
NORTHERN DISTRICT OF TEXAS
DALLAS DIVISION

DDC TECHNOLOGY, LLC,	§	
	§	
Plaintiff,	§	
	§	
v.	§	**CIVIL ACTION NO. 3:22-CV-1263-B**
	§	
GOOGLE LLC and ORORA PACKAGING SOLUTIONS,	§	
	§	
	§	
Defendants.	§	

MEMORANDUM OPINION AND ORDER

Before the Court is Defendant Google LLC's Motion to Transfer Venue and Sever (Doc. 94). Because the Court finds that convenience and justice favor transfer and otherwise outweigh concerns of judicial efficiency, the Court **GRANTS** the Motion, **SEVERS** Plaintiff DDC Technology, LLC ("DDC")'s claims against Google, and **TRANSFERS** the claims against Google to the United States District Court for the Northern District of California. DDC's claims against Defendant Orora Packaging Solutions ("OPS") remain before this Court.

I.

BACKGROUND

This is a patent infringement case. DDC originally sued six different entities for direct and indirect infringement of patents (collectively, the "Asserted Patents")[1] relating to a

[1] The patents include United States Patent No. 9,420,075, entitled "Virtual Reality Viewer and Input Mechanism," which issued on August 16, 2016 ("the '075 Patent"); United States Patent No. 9,811,184, entitled "Virtual Reality Viewer and Input Mechanism," which issued on November 7, 2017 ("the '184 Patent"); United States Patent No. 10,528,199, entitled "Virtual Reality Viewer and Input Mechanism," which issued on January 7, 2020 ("the '199 Patent"); United States Patent No. 11,093,000, entitled "Virtual Reality Viewer and Input Mechanism," which issued on August 17, 2021 ("the '000 Patent"); and United States Patent No. 11,093,001, entitled "Virtual Reality Viewer and Input Mechanism," which issued on August 17, 2021 ("the '001 Patent"). Doc. 123, Am. Compl., ¶ 3.

DDC Tech., LLC, Ex. 2016, p. 1
Google LLC v. DDC Tech., LLC
IPR2023-00711

cardboard virtual reality viewer. *See generally* Doc. 1, Orig. Compl. In short, in lieu of an expensive virtual reality headset, a user equipped with the cardboard viewer can insert their smartphone into the viewer to create a makeshift virtual reality headset:

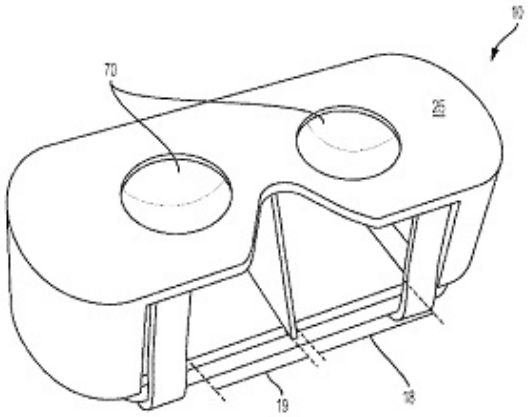

FIG. 4

Doc. 1-1, Ex. A, 5 (depicting the '075 Patent).

In June 2014, Google presented its first version of a cardboard viewer at an annual conference. Doc. 123, Am. Compl., ¶ 24. Around that time, a separate company, DODOcase, Inc., owned in part by Patrick Buckley, contacted Google regarding a potential business relationship. *See id.* ¶¶ 4, 27. Specifically, Buckley emailed several Google employees—Andrew Nartker, Alex Kauffman, and Clay Bavor—regarding a "conductive tap button" for the virtual viewer that could improve its functionality. *See id.* ¶¶ 27–29. DODOcase shortly thereafter filed its first provisional application to which the Asserted Patents are related. *Id.* ¶ 30.

Around March 2015, Google created the "Works With Google Cardboard" Program ("WWGC Program"). *Id.* ¶ 38. The idea underlying the WWGC Program was that Google would disseminate manufacturing and marketing guidelines to third parties to create their own cardboard viewers. *See id.* ¶¶ 43–45. *See generally* Doc. 123-15, Ex. O. Google also provided

software development guidelines for developers to create compatible applications. Doc. 123-15, Ex. O, 2. Together, the WWGC Program would function as an ecosystem where users could utilize the cardboard viewers on a host of compatible applications. Doc. 123, Am. Compl., ¶ 43

For manufacturers to be a part of the WWGC Program, they had to submit samples of their cardboard viewers for Google's approval and evaluation. *See id.* ¶¶ 41, 43–44. Once Google approved, the manufacturers could then indicate their viewer worked with the WWGC Program by printing a WWGC badge and QR code on the viewer. *Id.; see also* Doc. 123-15, Ex. O, 2. DODOcase's virtual viewer was a part of the WWGC Program. Doc. 123, Am. Compl., ¶ 40. In May 2015, Google launched a second version of its viewer, the Google Cardboard V2 Viewer. *Id.* ¶¶ 46, 48. Around this time, DODOcase filed a second provisional application relating to the Asserted Patents now at issue. *Id.* ¶ 47.

In 2016, however, after several years of selling its products, DODOcase suffered "price pressures resulting from infringers importing competitive products" and was forced stop sales and production. *Id.* ¶¶ 6–7. In 2018, weary of litigation, DODOcase assigned the Asserted Patents to DDC under an agreement that DODOcase would "retain[] a financial interest [in] recoveries from enforcement of the Asserted Patents." *Id.* ¶ 8.

As the successor in interest, DDC filed suit in June 2022 against six different entities who allegedly violated the Asserted Patents. Doc. 1, Orig. Compl. DDC sued Google for direct infringement of the Asserted Patents based on the Google Cardboard V2 Viewer or other "substantively similar" products. *Id.* ¶¶ 21, 74. DDC also sued several third-party manufacturers for their virtual viewers. *See id.* ¶¶ 16–20. And finally, DDC sued Google for indirect patent infringement by inducing third-party manufacturers—including the other defendants—to

infringe the Asserted Patents through the WWGC Program and by advertising the viewer as "open source." *E.g., id.* ¶¶ 251–52.

DDC however, eventually dismissed most of the defendants from suit. That is, within seven months of filing suit, DDC had filed notices or stipulations of dismissal on four of the six defendants.[2] A fifth defendant—Landsberg Orora—was dismissed by Court order on December 19, 2022, for lack of personal jurisdiction after the Court determined, in short, that DDC had seemingly "sued the wrong entity within the broader corporate family." Doc. 103, Mem. Op. & Order, 4. Google was the single remaining defendant in the suit, with a pending motion to sever and transfer venue. *See* Doc. 94, Mot. Transfer.

In February 2023, however, DDC filed an amended complaint. Doc. 123, Am. Compl. DDC added a new Landsberg entity—OPS—in Landsberg Orora's place. *See id.* The allegations in the new complaint are similar. DDC sues Google for direct infringement for the Google Cardboard V2 Viewer, but it also includes direct infringement claims for other WWGC Program viewers that Google advertised and linked on its site. *E.g.*, *id.* ¶¶ 76, 116. DDC also maintains its indirect infringement suits against Google for inducing the other—now former—defendants to directly infringe the Asserted Patents. *E.g.*, *id.* ¶ 159.

DDC sues OPS for direct infringement for (1) allegedly manufacturing the Google Cardboard V2 Viewer on Google's behalf and (2) manufacturing its own OPS cardboard viewer, which directly infringes the Asserted Patents. *E.g.*, *id.* ¶¶ 20, 138.

[2] Defendant HMD TECH SARL (d/b/a Homido) was dismissed on October 6, 2022. Doc. 73, Not. Dismissal. Emerge Technologies, Inc. (d/b/a Utopia 360) was dismissed on October 24, 2022. Doc. 82, Joint Stip. Dismissal. Pyrite VR LTD (d/b/a Maxbox VR) and DDC reached a confidential settlement agreement on December 21, 2022. Doc 107, Stip. Final Consent J. & Perm. Inj. And Structural Graphics, LLC (d/b/a Red Paper Plane) was dismissed on January 6, 2023. Doc 109, Joint Stip. Dismissal.

In its Motion to Transfer Venue and Sever the Case (Doc. 94), Google argues that joinder of the (now dismissed) defendants was improper and, in any event, DDC's case against it should be severed and transferred to the Northern District of California. Doc. 94, Mot. Transfer. Though Google's Motion preceded the dismissal of several defendants and the amended complaint, Google's arguments still apply, and the Motion is ripe before the Court.

II.

LEGAL STANDARD

A. *Transfer of Venue*

Even when venue is proper, a district court may transfer a civil action to another district or division if (1) the plaintiff could have brought that action there originally and (2) the transfer would be for "the convenience of parties and witnesses, in the interest of justice." 28 U.S.C. § 1404(a). The movant must clearly establish both elements to "show good cause" for transfer. *See In re Volkswagen of Am., Inc.*, 545 F.3d 304, 314–15, 314 n.10 (5th Cir. 2008) (en banc) [hereinafter *Volkswagen II*].

As to the first prong, a plaintiff may initially bring "any civil action for patent infringement . . . in the judicial district where the defendant resides, or where the defendant has committed acts of infringement and has a regular and established place of business." 28 U.S.C. § 1400(b).

For the second prong, to determine if transfer would be for "the convenience of parties and witnesses, in the interest of justice," courts balance eight private- and public-interest factors. *See Def. Distributed v. Bruck*, 30 F.4th 414, 433 (5th Cir. 2022) (internal quotation omitted). "The private[-]interest factors are: (1) the relative ease of access to sources of proof; (2) the availability of compulsory process to secure the attendance of witnesses; (3) the cost of

attendance for willing witnesses; and (4) all other practical problems that make trial of a case easy, expeditious and inexpensive." *Id.* at 433–34 (internal quotations omitted). "The public[-] interest factors bearing on transfer are: (1) the administrative difficulties flowing from court congestion; (2) the local interest in having localized interests decided at home; (3) the familiarity of the forum with the law that will govern the case; and (4) the avoidance of unnecessary problems of conflict of laws [or in] the application of foreign law." *Id.* at 435 (internal quotations omitted). No one factor is dispositive, although cost of attendance to witnesses is generally regarded as the most important. *BNSF Ry. Co. v. OOCL (USA), Inc.*, 667 F. Supp. 2d 703, 707, 711 (N.D. Tex. 2009) (Means, J.).

A plaintiff's choice of venue is not a "distinct factor" in the transfer analysis. *Volkswagen II*, 545 F.3d at 314 n.10. Instead, it is "treated as a burden of proof question," and deference to this choice is reflected in the movant's burden to show good cause for the transfer. *See id.* (internal quotation omitted). Thus, the balance of factors must clearly weigh in favor of transfer to the new venue. *Def. Distributed*, 30 F.4th at 433. "When the transferee venue is not clearly more convenient than the venue chosen by the Plaintiff, the Plaintiff's choice should be respected." *Id.*

B. A Party's Joint Motion to Sever and Transfer

When a party seeks to both transfer and sever its claims, the Court's inquiry is different than traditional severance motions. *See id.* at 427. Both the Federal Circuit and the Fifth Circuit direct courts to consider and weigh the "comparative inconvenience of splitting the suit versus the advantages to be gained from partial transfer." *In re Amazon.com, Inc.*, 2022 WL 17688072, at *2 (Fed. Cir. Dec. 15, 2022) (quoting *Def. Distributed*, 30 F.4th at 428); *see also Def. Distributed*, 30 F.4th at 429 ("[S]everance and transfer makes sense only where the administration of justice

would be materially advanced and a defendant in one district is not so involved in the transferred controversy that the same issues would have to be litigated twice.") (internal quotation omitted).

III.

ANALYSIS

The Court begins by applying the traditional transfer analysis to determine the advantages, if any, of transferring DDC's claims against Google to the Northern District of California. Because the Court finds the factors favor transfer, it next analyzes whether the benefits of transfer outweigh any judicial inefficiencies resulting from severing Google's claims. *See KY Home & Garden, LLC v. AMI Ventures, Inc.*, 2021 WL 8533033, at *2 (S.D. Tex. Sept. 30, 2021) (looking first to whether transfer of the claims against the moving defendants was appropriate under 28 U.S.C. § 1404 and then considering judicial efficiency).

A. *Transfer of Venue*

The Court finds that this case should be transferred pursuant to § 1404(a). In analyzing transfer of venue, the Court applies Fifth Circuit law because the issue is not unique to patent. *See, e.g.*, *In re Amazon.com*, 2022 WL 17688072, at *2. To obtain transfer, Google must show that (1) this suit could have properly been filed in the Northern District of California and (2) the Northern District of California is "clearly more convenient" when considering the private- and public-interest factors. *See Def. Distributed*, 30 F.4th at 433.

DDC concedes that this suit could have been properly filed in the District Court for the Northern District of California if Google was the sole defendant, Doc. 95, Resp., 5, as Google is headquartered in Mountain View, California, Doc. 94, Mot. Transfer, 8. The Court therefore considers the private- and public-interest factors enumerated above and finds that Google has shown good cause for transfer to the Northern District of California.

1. The Private-Interest Factors Weigh in Favor of Transfer

Three factors—relative access to sources of proof, availability of compulsory process, and cost of attendance for willing witnesses—favor transfer. The remaining factor, which considers practical problems and judicial economy, is neutral. Thus, the Court finds that, collectively, the private-interest factors strongly support transfer.

i. Relative ease of access to sources of proof

The first private-interest factor favors transfer. This factor considers the ease of access to sources of documentary and other physical, non-witness evidence. *See Volkswagen II*, 545 F.3d at 316 (considering only documents and physical evidence); *Netlist, Inc. v. SK Hynix Inc.*, 2021 WL 2954095, at *5 (W.D. Tex. Feb. 2, 2021) (noting the first factor does not include witnesses). The movant must provide "an actual showing of the existence of relevant sources of proof, not merely an expression that some sources likely exist in the prospective forum." *Def. Distributed*, 30 F.4th at 434. "In patent infringement cases, the bulk of the relevant evidence usually comes from the accused infringer. Consequently, the place where the defendant's documents are kept weighs in favor of transfer to that location." *In re Apple Inc.*, 979 F.3d 1332, 1340 (Fed. Cir. 2020) (analyzing transfer under Fifth Circuit law).

Here, Google has indicated that "documents in Google's possession about its products and services are normally created and maintained by the employees working on those products and services." Doc. 94-1, Ex. A, App. at 7. And the employees that worked on "the Google Cardboard V2 Viewer, Google's viewer guidelines for third parties, the WWGC [P]rogram, and the development of Google Cardboard viewers are based primarily in the San Francisco Bay Area," with "no such employees . . . in Texas." *Id.*; *see also* Doc. 94, Mot. Transfer, 3–4

(providing a list of nine employees and details of their involvement with the Google products and program). As such, Google claims "[a]ll technical, financial, and marketing documents related to Google Cardboard and the WWGC Program are created and maintained in California." Doc. 94, Mot. Transfer, 4.

DDC, by contrast, relies in part on the presence of potential witnesses, a consideration beyond the scope of this factor. *See Volkswagen II*, 545 F.3d at 316. DDC also points to former defendants Emerge, Structural Graphics, and Landsberg,[3] which all have locations in this district, as evidence that documents relevant to induced infringement are likely located here. *See* Doc. 95, Resp., 8–11. But DDC's claims regarding the presence of evidence and documents are based solely on the LinkedIn profiles of the entities' purported employees. *See id.* For example, DDC says that, because Emerge's "Computer Programmer" and "Sales & Marketing Manager" work in this district, relevant documents regarding the cardboard viewers must be here too. *See id.* at 9. But the logical jump from the location of Emerge's "Computer Programmer" to documents relating to cardboard virtual reality viewers is significant and highly speculative. *See Parus Holdings, Inc. v. Microsoft Corp.*, 2022 WL 17420391, at *5 (W.D. Tex. Dec. 4, 2022) (noting that the relevance of witnesses based on their LinkedIn profiles was "far too speculative" and worth "little to no weight"); Doc. 95-1, Ex. 8, App. at 73 (showing Structural Graphics' Dallas office is one of six national sales offices). Accordingly, comparing access to evidence in this

[3] Although DDC is now suing OPS, the Court still considers the Landsberg witnesses identified in DDC's response because most, if not all, of those witnesses presumably work for OPS instead of Landsberg. *See* Doc. 95, Resp., 13 (listing witnesses with LinkedIn profiles indicating they are located in Dallas and work for a Landsberg entity); *see also* Doc. 103, Mem. Op. & Order, 8–9 ("Landsberg has no physical presence or employees in Texas. Rather, a separate entity within the corporate family—[OPS]—is the reason for the office buildings and employees in Texas.") (internal citation omitted).

district with the Northern District of California, the Court finds this factor weighs in favor of transfer.

ii. Availability of compulsory process to secure the presence of witnesses

The Court finds the second private-interest factor weighs in favor of transfer. A subpoena may command a person's attendance at a trial, hearing, or deposition

> (A) within 100 miles of where the person resides, is employed, or regularly transacts business in person; or (B) within the state where the person resides, is employed, or regularly transacts business in person, if the person (i) is a party or a party's officer; or (ii) is commanded to attend a trial and would not incur substantial expense.

Fed. R. Civ. P. 45(c)(1). As the party seeking transfer, Google "has the burden to establish that [the District Court for the Northern District of California] has subpoena power over more unwilling witnesses than this Court." *See R2 Sols. LLC v. Target Corp.*, 2021 WL 2550908, at *3 (E.D. Tex. June 22, 2021).

Google has identified several potential third-party witnesses. For example, Google points to three former DODOcase employees—Patrick Buckley, Craig Dalton, and Gene Daly. Doc. 94, Mot. Transfer, 13. Buckley is the named inventor on the Asserted Patents. *Id.* at 9. And Dalton and Daly were involved in "pre-suit communications [with Google] . . . when both companies were developing and selling their cardboard viewers." Doc. 98, Reply, 7. Dalton and Daly were also "named as inventors on the provisional application to which the [A]sserted [P]atents claim priority." *Id.* Google additionally highlights MerchSource, a company previously involved in litigation with DODOcase and DDC that may be relevant to licensing or damages issues. Doc. 94, Mot. Transfer, 13. And finally, Google identifies Dontae Rayford, who was a former Google employee named in the original complaint as the "business development manager" that accepted

DODOcase's cardboard viewer into the WWGC Program. *Id.*; *see also* Doc. 1, Orig. Compl., ¶¶ 40, 46.

Buckley currently lives in Idaho—outside of both the transferor and transferee forums—and has indicated he is willing to travel to testify if needed. *See* Doc. 95-1, Ex. B, App. at 10–11. According to their LinkedIn profiles,[4] Dalton and Daly live in the Northern District of California, and Rayford lives in Los Angeles, California. *See* Doc. 94-1, Exs. 6, 8, 10, App. at 49, 67, 75. Similarly, MerchSource is located Irvine, California. *Id.,* Ex. 11, App. at 88. Though Google is unsure whether these witnesses are unwilling to testify, it argues that their location favors transfer. Doc. 94, Mot. Transfer, 13.

Conversely, DDC points again to the employees of former defendants Emerge, Structural Graphics, and Landsberg as presumably unwilling witnesses located in the Northern District of Texas. Doc. 95, Resp., 14. But for similar reasons as discussed above, their relevance as witnesses, based only on their company-affiliations and job titles, is highly speculative and worth little weight. Whereas Google has identified third-party witnesses and explained their relevant knowledge, DCC's witnesses lack any direct connection to the cardboard viewers. Accordingly, the Court declines to simply tally the witnesses and instead finds that, taking into consideration the demonstrated relevance of the purported witnesses, this factor weighs in favor of transfer.

iii. Cost of attendance for willing witnesses

The Court finds that the third private-interest factor also favors transfer. This factor considers witness convenience and cost, which usually depend on the distance a witness must

[4] The Court's prior discussion on LinkedIn should not be taken as a categorical statement about the use of LinkedIn profiles as evidence. Rather, the Court sees a fundamental difference between using someone's LinkedIn profile as evidence of the person's probable location and using someone's LinkedIn profile as evidence that, based on a generalized job title, the person likely has relevant knowledge to the case at hand.

travel to the prospective forums. *See Volkswagen II*, 545 F.3d at 317. "When the distance between an existing venue for trial of a matter and a proposed venue under § 1404(a) is more than 100 miles, the factor of inconvenience to witnesses increases in direct relationship to the additional distance to be traveled." *Id.* Indeed, "[a]dditional distance means additional travel time[,] . . . meal and lodging expenses[,] and . . . overnight stays." *In re Volkswagen AG*, 371 F.3d 201, 205 (5th Cir. 2004).

"[T]he moving party must identify specific witnesses and outline the substance of their testimony." *BNSF Ry. Co.*, 667 F. Supp. 2d at 711. This factor is often regarded as the most important, though courts typically give greater weight to the convenience of non-party witnesses than party witnesses. *Ternium Int'l U.S.A. Corp. v. Consol. Sys., Inc.*, 2009 WL 464953, *4 (N.D. Tex. Feb. 24, 2009) (Fish, J.).

Google has identified several willing witnesses for both itself and DDC that are located in California. Doc. 94, Mot. Transfer, 9–10. First, Google points to nine relevant employees that developed the cardboard viewers or worked on the WWGC Program. *Id.* at 9. Google also highlights the potential DODOcase VR employees—Buckley, Dalton, and Daly—should they be willing witnesses for DDC. *Id.* at 9–10. As discussed above, Buckley lives in Idaho, and Dalton and Daly live in Northern District of California. *See* Doc. 94-1, Exs. 6, 8, 10, App. at 49, 67, 75.

In response, DDC argues that Google has simply "hand-picked several employees with ties to California to create the illusion of inconvenience." Doc. 95, Resp., 7. In particular, DDC points to Google's omission of Damien Henry from the list of potential witnesses. *Id.* at 15. Henry lives in France and, according to DDC, played a role in developing the Google viewers. *See id.* DDC also notes that it is located in Austin, Texas and again references the various employees

from former defendants Emerge, Structural Graphics, and Landsberg that are purportedly located in this district. *Id.* at 15–16.

The Court finds that this factor favors Google. The Northern District of California is a more convenient forum for the non-party DODOcase employees than the Northern District of Texas, as Daly and Dalton live there, and Buckley is closer by plane.[5] Google's party witnesses—nine employees—are also located almost exclusively in California, with several directly mentioned in DDC's complaint. *See* Doc. 123, Am. Compl., ¶¶ 32–34 (discussing Alex Kauffmann, Andrew Nartker, and Clay Bavor). And even if Henry is a relevant witness—a notion Google contests—the burden of international travel from France to California or Texas is comparable. Doc. 95, Resp., 15; *see also In re Genentech, Inc.*, 566 F.3d 1338, 1344 (Fed. Cir. 2009) (noting that travel for European witnesses to California versus Texas was comparable and collecting similar cases).

While the Court acknowledges that DDC is located in Austin, Texas, DDC itself only acquired the Asserted Patents for purposes of litigation and is unlikely to have many substantive witnesses. *See* Doc. 94, Mot. Transfer, 12. Moreover, the employees of the former defendants DDC has identified are unlikely to be willing witnesses and, in any event, are speculative as to both their location and relevance. Accordingly, the Court finds that this factor favors transfer.

iv. Practical problems that make trial of a case easy, expeditious, and inexpensive

The Court finds that the fourth private-interest factor is neutral. "This factor encompasses concerns rationally based on judicial economy." *Seagen Inc. v. Daiichi Sankyo Co.*, 546 F. Supp. 3d 515, 532 (E.D. Tex. 2021). The Court "may properly consider any judicial

[5] Idaho is an hour closer by plane to the Northern District of California than the Northern District of Texas. Doc. 98-1, Exs. 1–2, App. at 4–9.

economy benefits which would have been apparent at the time the suit was filed" but should not consider benefits arising after the filing of the suit. *In re EMC Corp.*, 501 F. App'x 973, 976 (Fed. Cir. 2013) (citing *Hoffman v. Blaski*, 363 U.S. 335, 343 (1960)). Google emphasizes a prior litigation that took place in the Northern District of California involving some of the Asserted Patents. Specifically, DODOcase VR filed suit against MerchSource in the Northern District of California, and DDC was later added as a plaintiff. *See DODOcase VR, Inc. v. MerchSource, LLC*, No. 3:17-CV-07088 (N.D. Cal. filed Dec. 13, 2017). The lawsuit involved the asserted '075 and '184 patents, but the bulk of the litigation involved a temporary restraining order and preliminary injunction. *See* Doc. 94-1, Ex. 17, App. at 120–31. The court thus did not reach more substantive issues such as claim construction. *See id.* Nevertheless, the Northern District of California has some familiarity with these patents and the issues at hand.

On the other hand, if the action stayed in this district, even if the claims against Google were severed,[6] efficiencies are gained because of the overlap in claims against OPS and Google regarding the Google Cardboard V2 Viewer and Google's induced infringement. *See* Doc. 123, Am. Compl., ¶ 20. The claims involve the same Asserted Patents and similar issues.

On balance, therefore, the Court finds that the Northern District of California's familiarity with the Asserted Patents roughly matches any efficiencies gained by keeping the claims against both parties in the Northern District of Texas.

2. The Public-Interest Factors Are Neutral

Turning to the public-interest factors, the first factor—court congestion—weighs against transfer, while the second factor—localized interests—favors transfer. The third and fourth

[6] Any judicial efficiency concerns arising from the severance itself—as opposed to the transfer—are considered in the severance analysis. *See infra* Section B.

factors, which consider the courts' familiarity with governing law and avoidance of conflict of law issues, are neutral. Accordingly, the Court finds that, as a whole, the public-interest factors are neutral.

i. Administrative difficulties flowing from court congestion

The Court finds that the first public-interest factor weighs against transfer. "This factor takes into consideration the speed with which a case may be resolved in the plaintiff's chosen venue and in the proposed transferee venue." *BNSF Ry. Co.*, 667 F. Supp. 2d at 712 (citing *In re Genentech, Inc.*, 566 F.3d at 1347). Nevertheless, "this factor alone should not outweigh other factors," as it is the "most speculative." *Frito-Lay N. Am., Inc. v. Medallion Foods, Inc.*, 867 F. Supp. 2d 859, 871 (E.D. Tex. 2012) (citing *In re Genentech*, 566 F.3d at 1347).

DDC states this factor weighs against transfer because in the twelve-month period ending on June 30, 2022, the Northern District of California had 9,837 case filings and 12,453 cases pending with a time from filing to trial of 34.7 months. Doc. 95, Resp., 18; Doc. 95-1, Ex. 20, App. at 140. DDC also notes in the same twelve-month period, the Northern District of Texas had 7,386 case filings and 6,836 cases pending with a time from filing to trial of 25.1 months. Doc. 95, Resp., 18; Doc. 95-1, Ex. 20, App. at 139. Google argues this factor is neutral because patent cases in both forums have an equal rate of disposition over the past ten years. Doc. 94, Mot. Transfer, 17. The Court finds that the twelve-month period is a better indicator of court congestion and therefore concludes that this factor weighs against transfer.

ii. Local interest in having localized interests decided at home

The Court finds that the second public-interest factor favors transfer. This factor focuses on deciding localized interests at home and "most notably regards not merely the parties' significant connections to each forum writ large, but rather the significant connections between a

particular venue and the events that gave rise to a suit." *Def. Distributed*, 30 F.4th at 434 (quoting *In re Apple*, 979 F.3d at 1345). "Important considerations include the location of the injury, witnesses, and the plaintiff's residence." *Id.*

The Northern District of California's interests in deciding this case are clear, as the suit largely arises out of events in Northern California. Specifically, the Google Cardboard viewers, along with the WWGC Program, were designed and operated in the Northern District of California. *See In re Apple*, 979 F.3d at 1345 (finding significant the location where the "accused products were designed, developed, and tested"). And the alleged injury primarily arose in Northern California with DODOcase VR as the operating company and patent holder. That DDC now resides in Austin, Texas and retains the patents solely for purposes of litigation is therefore less compelling.

The Northern District of Texas has a limited interest. While some of the infringing activity by the former defendants may have taken place in this district, those defendants have been dismissed. Thus, as to the case against Google, the connection to this district only exists indirectly through the alleged infringing acts of now-dismissed third parties. Additionally, as previously discussed, DDC's evidence regarding the actual presence of the former defendants and their witnesses here is somewhat speculative. Similarly, even if DDC has "taken affirmative steps to acquire and sell products covered by the Asserted Patents in Texas and this Judicial District," Doc. 95, Resp., 19, the sale of products alone is not enough to negate transfer. *See In re TOA Techs., Inc.*, 543 F. App'x 1006, 1009 (Fed. Cir. 2013) (holding that the "sale of a product in the plaintiff's preferred forum" did "not negate the significant interest in trying this case in a venue in which the accused product was designed"). The Court therefore finds that this factor weighs in favor of transfer.

iii. Familiarity of the forum with the governing law

The Court finds that the third public-interest factor is neutral. The parties agree that both forums are familiar with patent law. Doc. 94, Mot. Transfer, 17; Doc. 95, Resp., 20.

iv. Avoidance of unnecessary problems of conflict of laws or in the application of foreign law

The Court finds that the fourth public-interest factor is neutral. The parties agree that federal patent law governs the dispute, and they raise no conflict-of-law issues. Doc. 94, Mot. Transfer, 17; Doc. 95, Resp., 20.

3. Considered Together, the Balancing Factors Support Transfer

Together, the Court finds that Google has shown good cause for transfer by "clearly demonstrating that a transfer is 'for the convenience of parties and witnesses, in the interest of justice.'" *See Def. Distributed*, 30 F.4th at 433 (quoting *Volkswagen II*, 545 F.3d at 315) (internal alterations omitted). The factors strongly favor transfer, as four weigh in favor, three are neutral, and one weighs against. Specifically, sources of proof, compulsory process, witness cost (often regarded as the most important), and localized interests all favor transfer. Practical problems, familiarity with the governing law, and avoiding conflicts of laws are neutral. And only court congestion (often regarded as the most speculative) weighs against transfer.

Considering all factors and the evidence provided by DDC and Google, the Court therefore concludes that Google has "establish[ed] good cause for transfer based on convenience and justice." *See id*. However, because Google is also seeking to sever the claims against it, the Court must weigh the convenience gained from transfer against any judicial inefficiencies arising from severance. *Id.* at 428.

B. Joinder and Severance

The Court applies Federal Circuit law because joinder and severance in patent cases is based on an analysis of the accused acts of infringement and involves substantive issues unique to patent law. *In re EMC Corp.*, 677 F.3d 1351, 1354 (Fed. Cir. 2012).

As a threshold matter, the Court finds that joinder of OPS was proper under the patent statute. Joinder in patent cases is governed by the America Invents Act ("AIA"). *See* 35 U.S.C. § 299. The AIA imposes more stringent requirements than the traditional permissive-joinder standards under Federal Rule of Civil Procedure 20. *Compare id.*, *with* Fed. R. Civ. P. 20. In particular, the statute provides that defendants in patent infringement cases may only be joined if

> (1) any right to relief is asserted against the parties jointly, severally, or in the alternative with respect to or arising out of the same transaction, occurrence, or series of transactions or occurrences relating to the making, using, importing into the United States, offering for sale, or selling of the same accused product or process; and
>
> (2) questions of fact common to all defendants or counterclaim defendants will arise in the action.

35 U.S.C. § 299(a). In comparison to the traditional permissive joinder requirements, 35 U.S.C. § 299 adds the requirement that the transaction or occurrence relates to the making, using, or selling of the same accused product or process. *See id.* To alleviate doubt, the statute further emphasizes that "accused infringers may not be joined in one action as defendants . . . based solely on allegations that they each have infringed the patent or patents in suit." *Id.* § 299(b).

Here, OPS was properly joined under 35 U.S.C. § 299(a) because DDC asserts claims jointly and severally against Google and OPS regarding the Google Cardboard V2 Viewers. *See, e.g.*, Doc. 123, Am. Compl., ¶¶ 136, 157.

However, because of the "permissive nature of the applicable rules," the Federal Circuit has characterized the joinder requirements "as necessary, but not sufficient, conditions for joinder." *In re Nintendo Co.*, 544 F. App'x 934, 939 (Fed. Cir. 2013). The primary consideration is, at root, "whether it would be convenient or fair to keep the matters together." *Id.* at 938. A district court must therefore "examine whether permissive joinder would 'comport with the principles of fundamental fairness' or would result in prejudice to either side." *Id.* at 939 (quoting *Coleman v. Quaker Oats Co.*, 232 F.3d 1271, 1296 (9th Cir. 2000)).

Under those broad principles, courts have "considerable latitude to order severance solely for purposes of facilitating transfer." *Id.* at 940–41. If the rule were otherwise, a plaintiff could preclude a proper transfer of venue by including defendants that were only peripherally or indirectly involved in the action. *Id.* at 941; *Wyndham Assocs. v. Bintliff*, 398 F.2d 614, 618 (2d Cir. 1968).

When a motion to sever is combined with a motion to transfer, the Court "must weigh carefully the comparative inconvenience of splitting the suit versus the advantages to be gained from a partial transfer." *In re Amazon.com*, 2022 WL 17688072, at *2 (citing *Def. Distributed*, 30 F.4th at 428). The severance inquiry, therefore, is "different—and more focused on judicial efficiency." *Def. Distributed*, 30 F.4th at 427.

Here, the Court finds that the strong interests in transfer outweigh any judicial inefficiencies from splitting the suit. To be sure, the suit has some overlapping claims and issues between OPS and Google. Most importantly, OPS is alleged to have manufactured Google's V2 Viewer, and DDC seeks to hold Google and OPS jointly and severally liable for that infringement. *E.g.*, Doc. 123, Am. Compl., ¶¶ 79, 157. Similarly, Google allegedly induced OPS's infringement by disseminating specifications and the WWGC Program documents, which Google

represented as "open source." *Id.* ¶ 160. And, of course, there is overlap in the Asserted Patents forming the claims against both Google and OPS. *Compare, e.g.*, *id.* ¶¶ 115–36, *with id.* ¶¶ 137–57.

Zooming out, however, the Court finds that OPS is ultimately not "so involved in the controversy" such that judicial efficiency overcomes the strong interests in transfer. *See Def. Distributed*, 30 F.4th at 428 (internal quotation omitted). Rather, DDC's claims against OPS are peripheral to the central action against Google. Indeed, DDC claims that Google directly infringed its patents through not only the Google Cardboard V2 Viewer, but also the viewers of former defendants and WWGC Program members. These viewers include "Emerge's Utopia 360° VR Headset; Structural Graphics SleekPeeks Cardboard VR Viewer; Pyrite's Standard Branded Google Cardboard (Inspired) V2, Deluxe Custom VR Google Cardboard (Inspired) V2, and Adjustable Lenses Google Cardboard." *See, e.g.*, Doc. 123, Am. Compl., ¶¶ 18, 159. DDC also claims Google directly infringed the Asserted Patents by advertising and linking products from the WWGC Program on its site. These viewers include

> Landsberg (aka Orora) V2 Cardboard Virtual Reality Viewer, Irusu V2 Cardboard Virtual Reality Viewer, Zaak Two V2 Cardboard Virtual Reality Viewer, Mattel ViewMaster Deluxe VR Headset, Mattel ViewMaster Virtual Reality Headset (Starter Pack), and Powis Custom (aka 360 Fly) VR Headset. . . . Vusion V3 Cardboard Virtual Reality Viewer, Pyrite (dba Maxbox) V2 Cardboard Virtual Reality Viewer, Knoxlabs V2 Cardboard Virtual Reality Viewer, I AM CARDBOARD V2 Cardboard Virtual Reality Viewer, Unofficial Cardboard UC 2.0 Cardboard Virtual Reality Viewer, I AM Cardboard DSCVR Virtual Reality Headset, and HMD Tech SARL (dba Homido) Grab Virtual Reality Viewer.

See, e.g., *id.* ¶¶ 76, 249. In context, therefore, the efficiencies gained from the overlap in claims regarding OPS's manufacturing of Google Cardboard V2 Viewer are likely overshadowed by the inefficiencies in including OPS as a peripheral defendant in the mass of claims against Google for other cardboard viewers.

Even casting aside the other viewers in question, it is ultimately Google's own V2 Viewer and its WWGC Program that provide any basis for overlap with OPS. In that regard too, Google is the central defendant in the action, and OPS's role as a manufacturer is peripheral. *See In re Nintendo,* 544 F. App'x at 940–41 (noting that the district court erred in not considering severance of Nintendo's claims because, even though the retailers were properly joined, they likely were only peripherally involved in the action while Nintendo was the central defendant).

The Court also attaches little significance to any efficiencies that arise solely from the commonality of Asserted Patents underlying the claims. Through the AIA's provisions on patent joinder, Congress indicated its policy preference that, presumably despite some judicial efficiency gained, commonality in asserted patents is not enough to join the claims together. *See* 35 U.S.C. § 299 ("[A]ccused infringers may not be joined in one action . . . based solely on allegations that they each have infringed the patent or patents in suit."); *see also LT Tech, LLC v. FrontRange Sols. USA Inc.*, 2013 WL 6181983, at *6 (N.D. Tex. Nov. 26, 2013) (Lynn, J.) (discounting judicial efficiency in a transfer of venue analysis where the efficiency was only the product of a common patent).

Together, therefore, in "weigh[ing] carefully the comparative inconvenience of splitting the suit versus the advantages to be gained from a partial transfer," the Court finds that the strong interests in transfer outweigh the minimal lost efficiency in splitting the suit. *See In re Amazon.com*, 2022 WL 17688072, at *2.

IV.

CONCLUSION

In sum, because the Court finds that the interests in transfer outweigh the inconveniences of severance, the Court **GRANTS** Google's Motion to Transfer Venue and

Sever (Doc. 94). The case as to Defendant Google is **SEVERED** and **TRANSFERRED** to the United States District Court for the Northern District of California. DDC's claims against Defendant OPS remain before this Court. The Clerk of Court shall effectuate the transfer according to the usual procedure.

SO ORDERED.

SIGNED: March 14, 2023.

JANE J. BOYLE
UNITED STATES DISTRICT JUDGE