US 20040138588A1

(19) United States

(12) Patent Application Publication

(10) Pub. No.: US 2004/0138588 A1

(43) Pub. Date: Jul. 15, 2004

Saikley et al.

(54) AUTOMATIC BIOLOGICAL ANALYTE TESTING METER WITH INTEGRATED LANCING DEVICE AND METHODS OF USE

(76) Inventors: **Charles R. Saikley**, Alameda, CA (US); **Paul R. Hamerton-Kelly**, Lake Oswego, OR (US); **Sophia Sia**, Union City, CA (US); **Daniel F. Kennedy**, San Francisco, CA (US); **Matthew W. Peterson**, San Francisco, CA (US); **Sammy Cheuksang Tsang**, Alameda, CA (US); **W. Mark Lortz**, Pleasanton, CA (US); **Joseph A. Vivolo**, San Francisco, CA (US)

Correspondence Address:
PARSONS HSUE & DE RUNTZ LLP
SUITE 1800
655 MONTGOMERY STREET
SAN FRANCISCO, CA 94111 (US)

(21) Appl. No.: **10/701,993**

(22) Filed: **Nov. 4, 2003**

Related U.S. Application Data

(60) Provisional application No. 60/424,414, filed on Nov. 6, 2002.

Publication Classification

(51) Int. Cl.[7] **B65D 81/00**; A61B 5/00

(52) U.S. Cl. **600/583**; 600/584

(57) **ABSTRACT**

The invention is directed to an integrated device for sampling and testing an analyte. The device generally comprises a housing, a lancing device for sampling an analyte, a test strip for substantially capturing at least a portion of the analyte, and a display unit for displaying a result corresponding to the captured portion of the analyte. The invention is further directed to methods for sampling and testing. For example, one method comprises performing a single operation to sample an analyte, to capture the sampled analyte, to perform testing on the sampled analyte, and to display a result corresponding to the performed test. A method such as this can be carried out using an integrated sampling and testing device of the invention, for example, by placing the device the device on a test site of a subject, such as a patient, and performing the single operation to obtain a test result. The invention has particular application in the sampling and testing of analytes in blood, such as the blood of a diabetic patient.

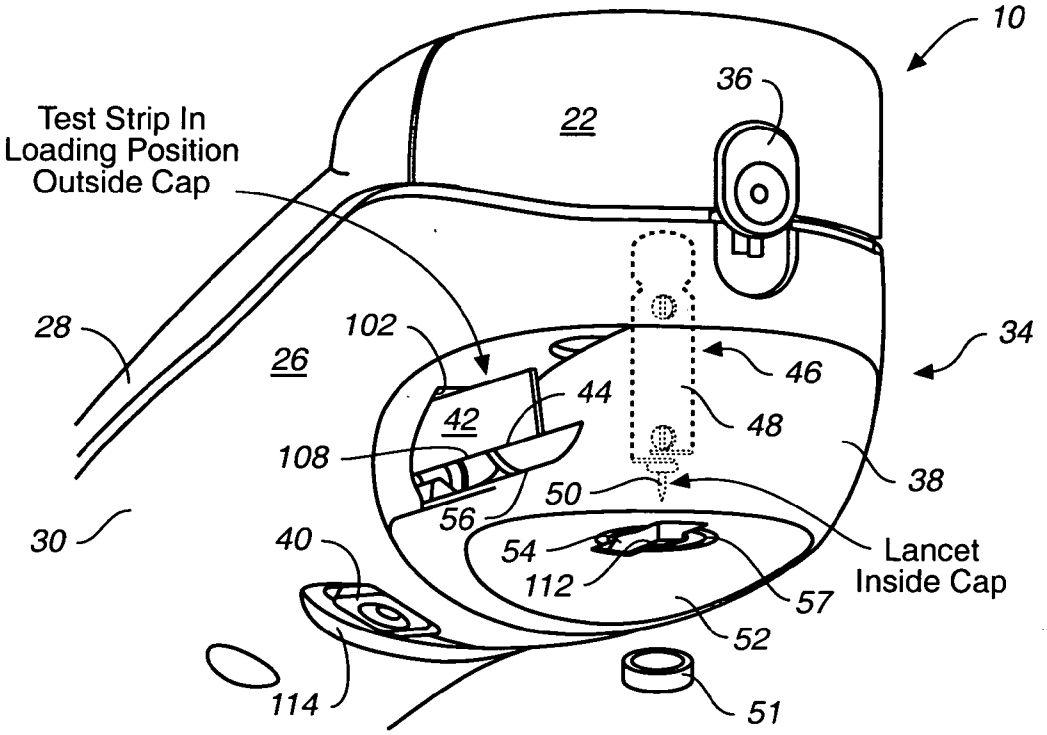

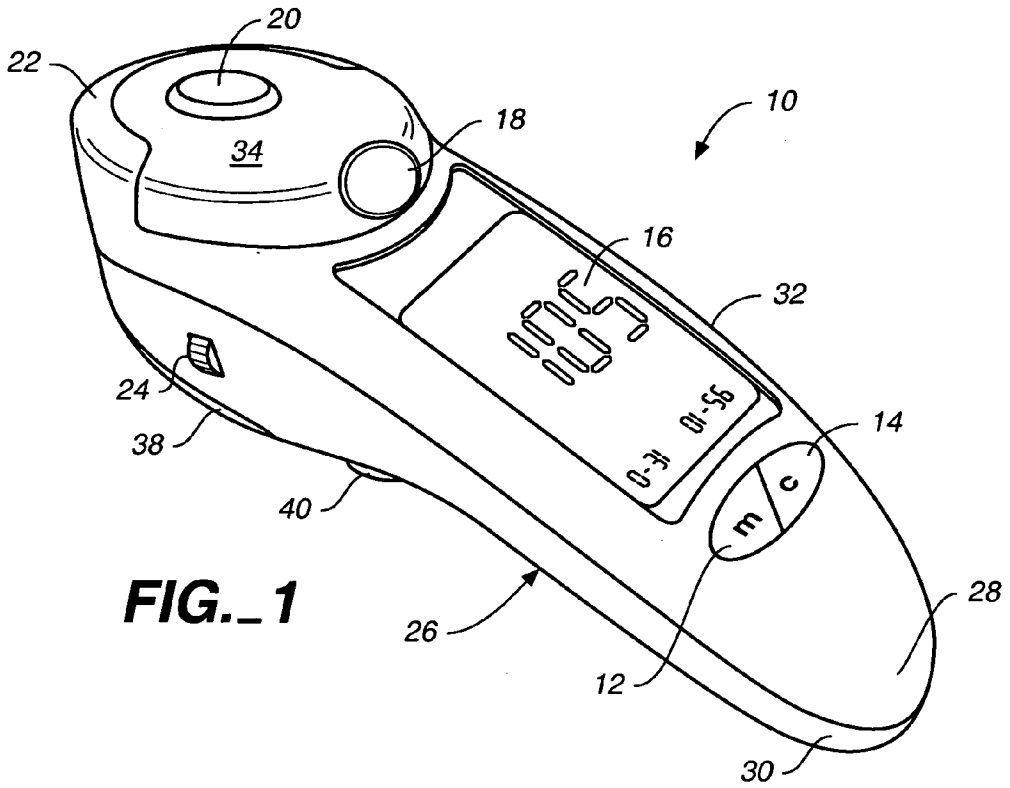
20
22
34
18
10
16
32
24
38
40
14
m
c
26
12
28
30

FIG._1

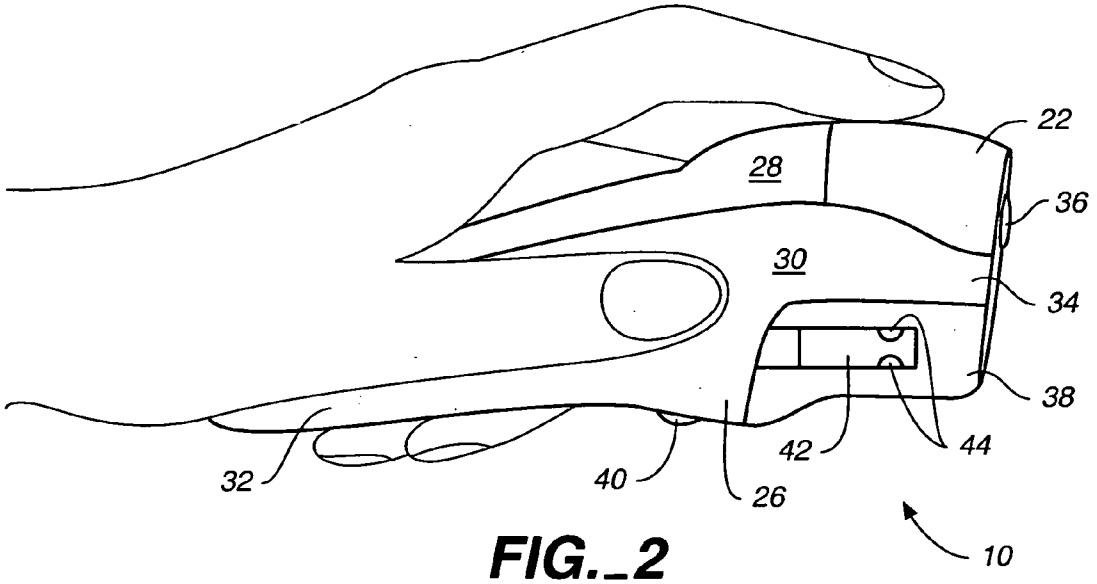
22
28
36
30
34
38
42
44
32
40
26
10

FIG._2

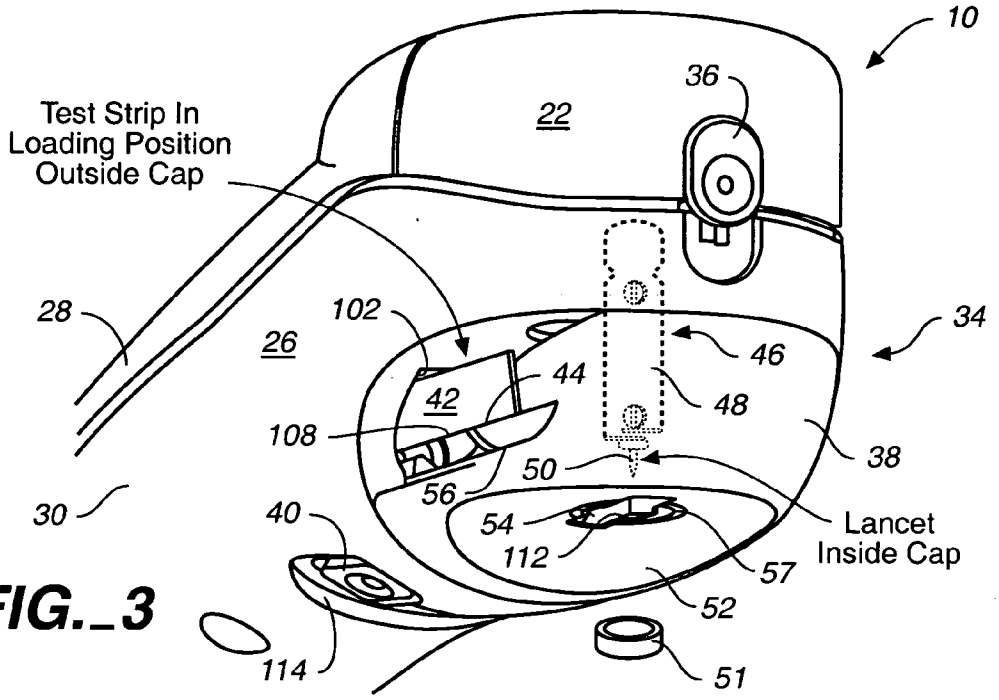
10
36
22
Test Strip In
Loading Position
Outside Cap
28
102
26
34
46
44
42
48
108
38
50
56
30
40
54
Lancet
Inside Cap
112
57
52
114
51

FIG._3

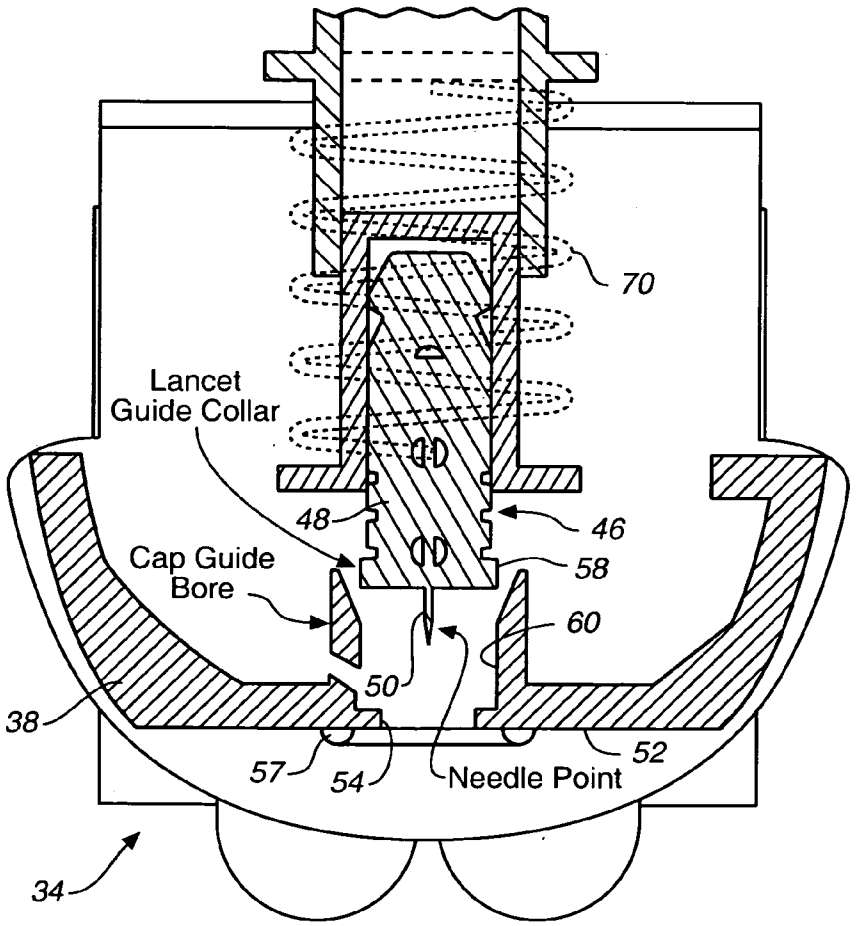
70
Lancet
Guide Collar
48
46
Cap Guide
Bore
58
60
50
38
57
54
Needle Point
52
34

FIG._4

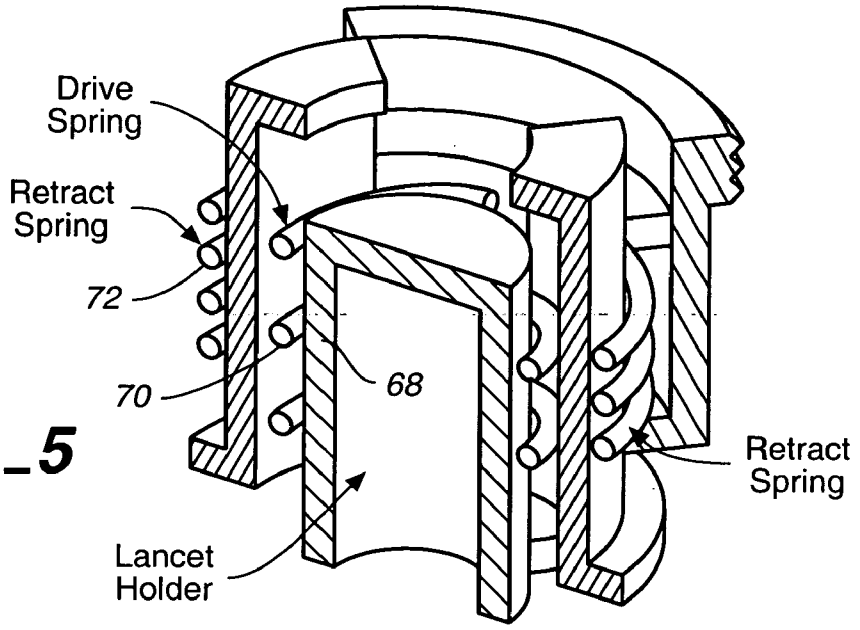
Drive Spring
Retract Spring
72
70
68
Retract Spring
Lancet Holder

FIG._5

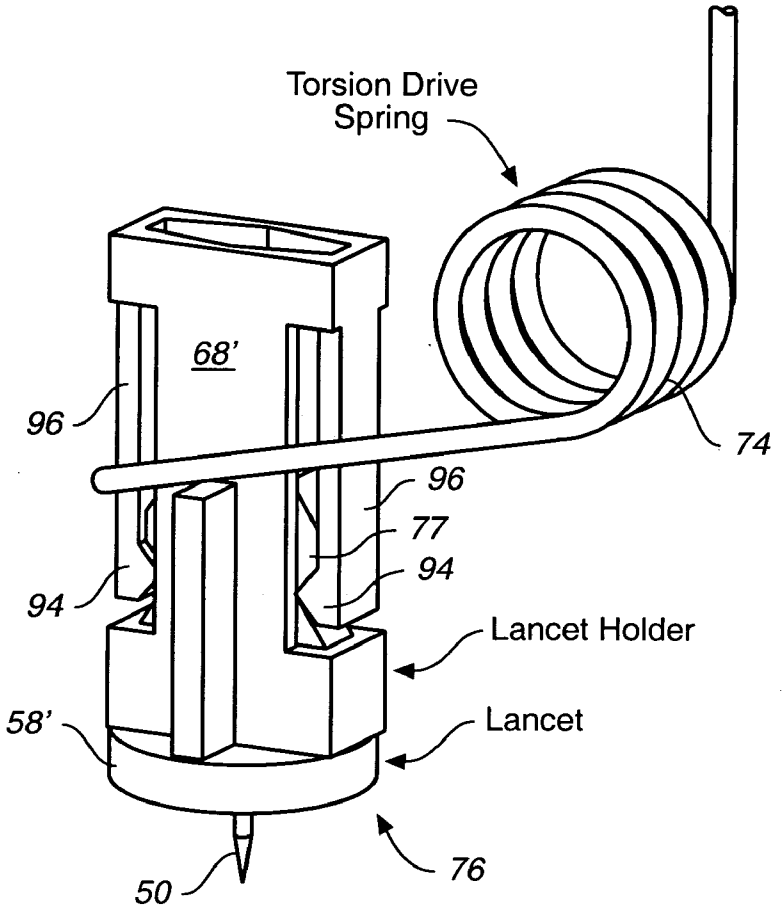
Torsion Drive Spring
68'
96
74
96
77
94
94
Lancet Holder
58'
Lancet
50
76

FIG._6

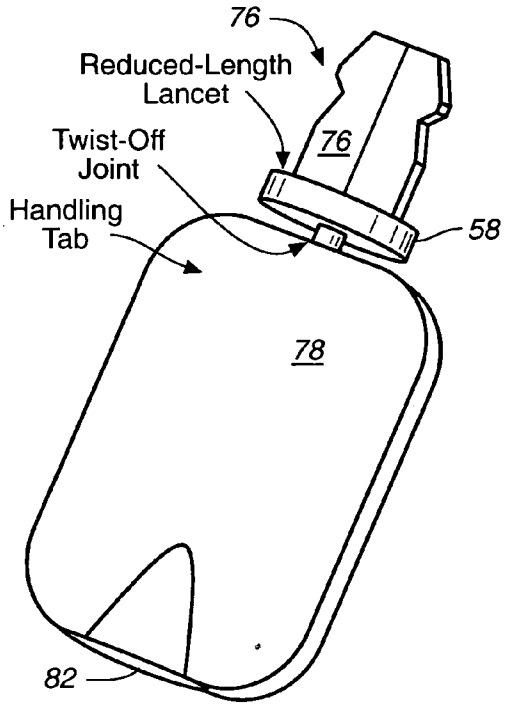

FIG._7A

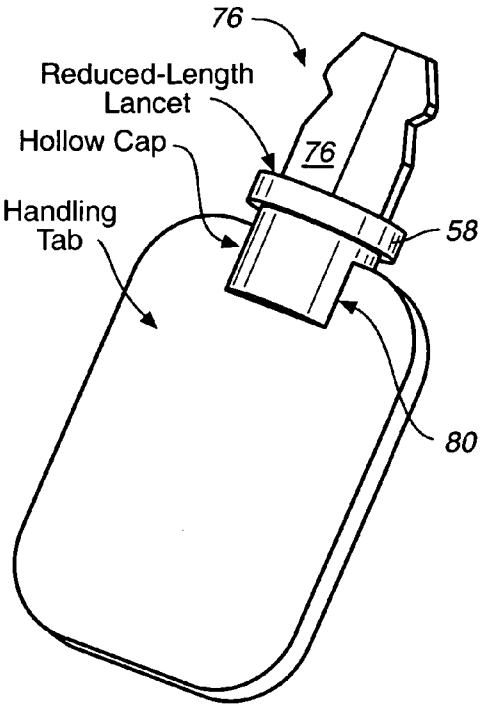

FIG._7B

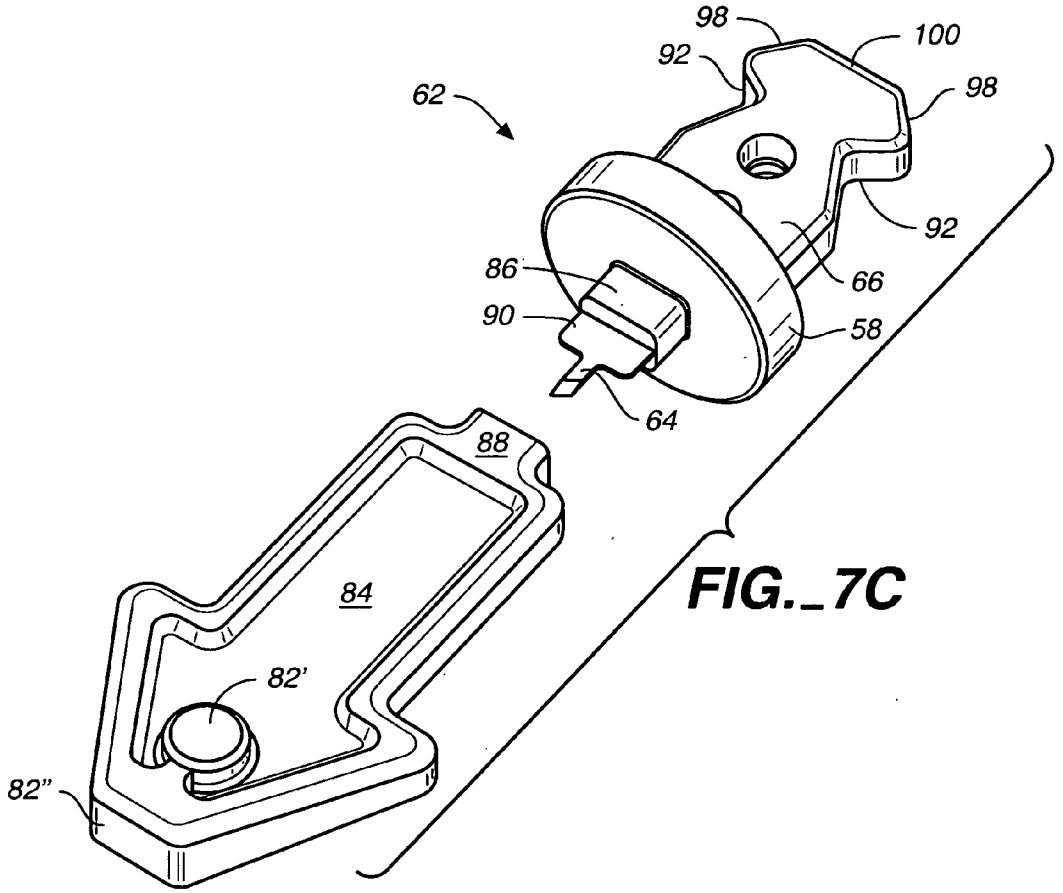

FIG._7C

FIG._7D

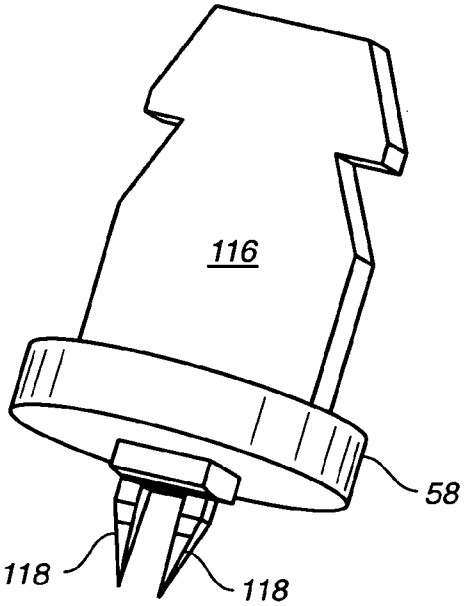

FIG._7E

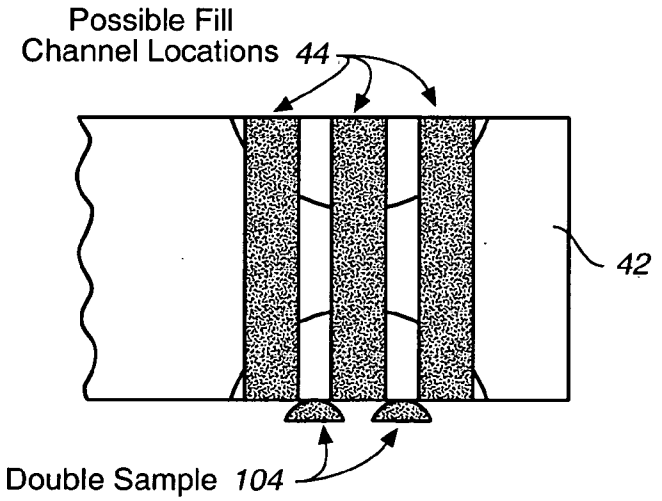

FIG._7F

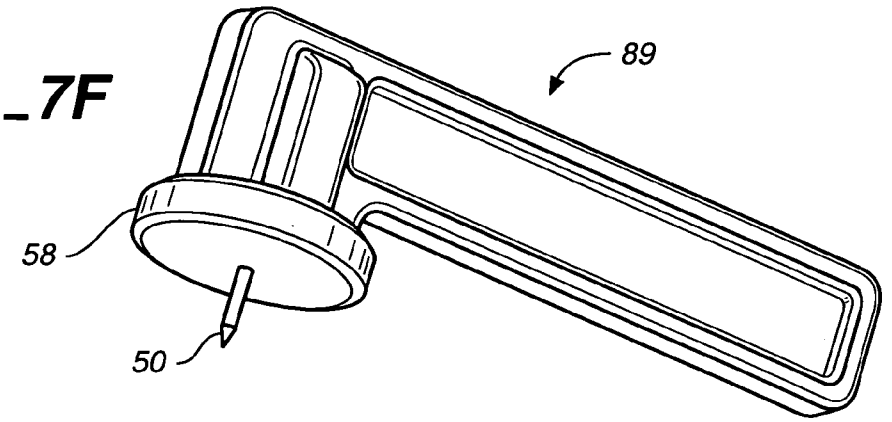

FIG._8

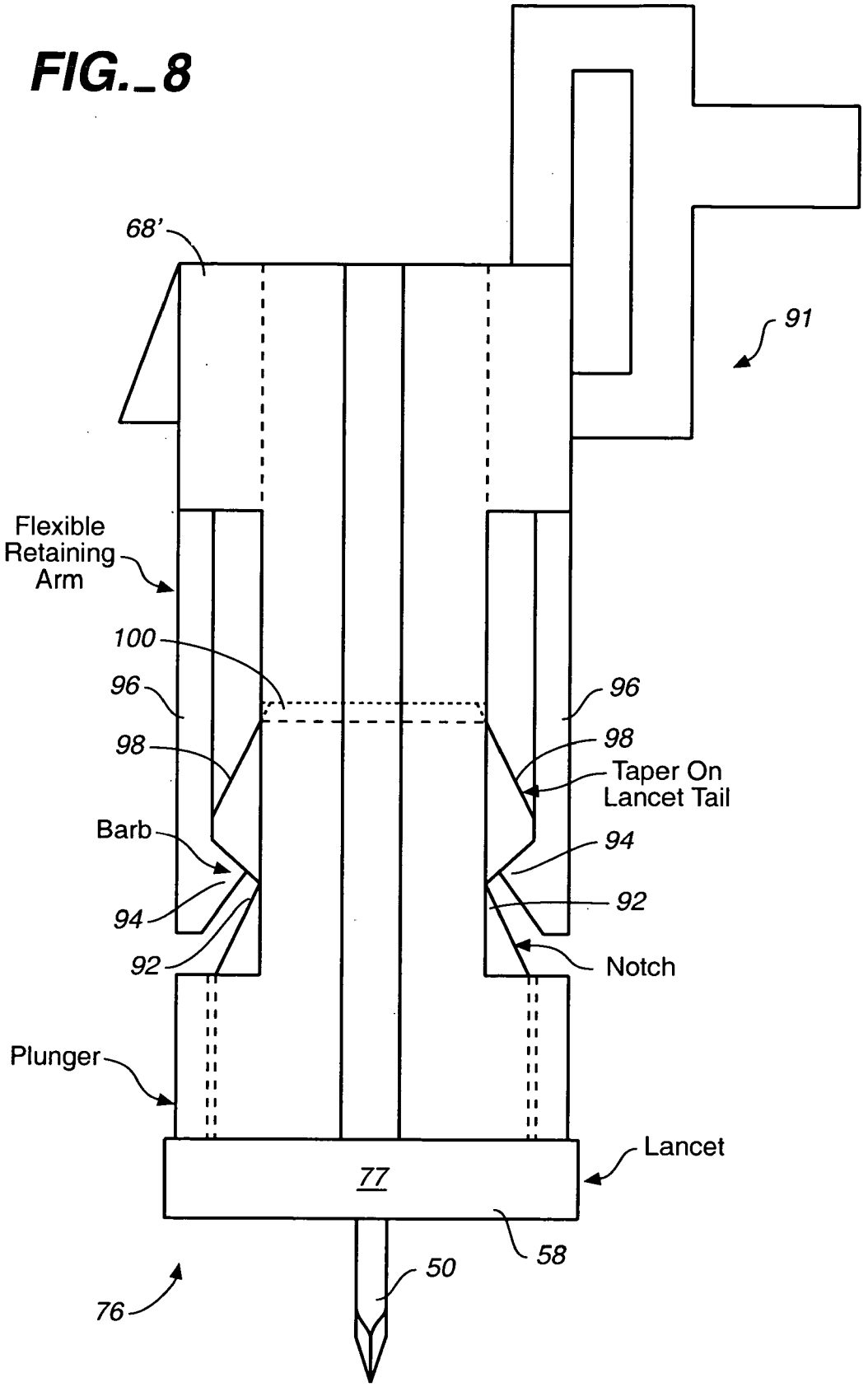
68'
91
Flexible Retaining Arm
100
96
98
Barb
94
92
96
98
Taper On Lancet Tail
94
92
Notch
Plunger
Lancet
77
58
50
76

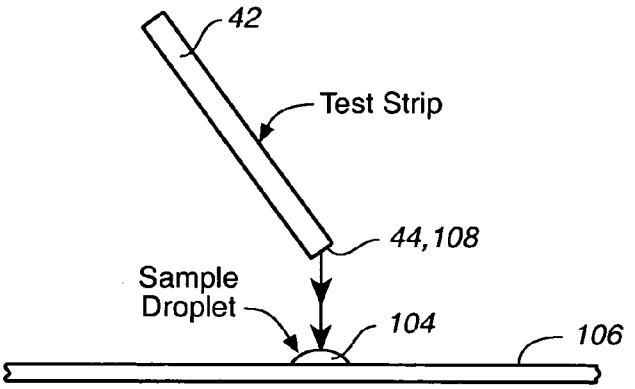
42
Test Strip
44,108
Sample
Droplet
104
106

FIG._9A

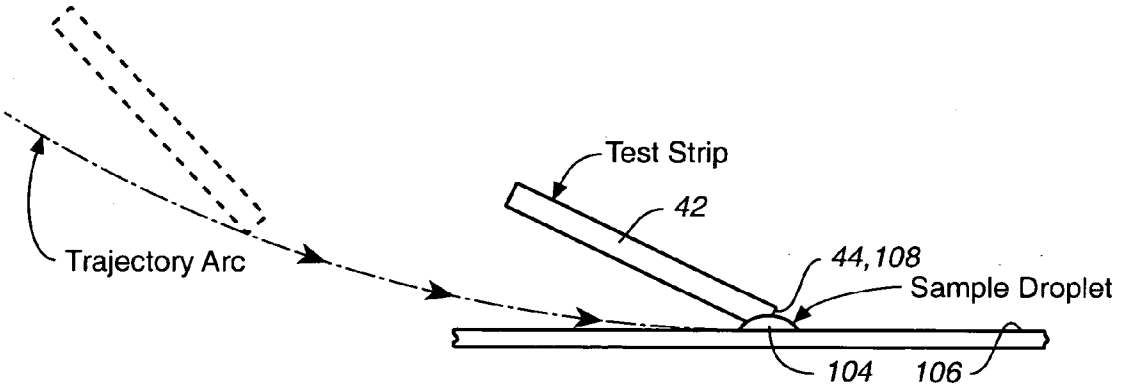
Test Strip
42
Trajectory Arc
44,108
Sample Droplet
104
106

FIG._9B

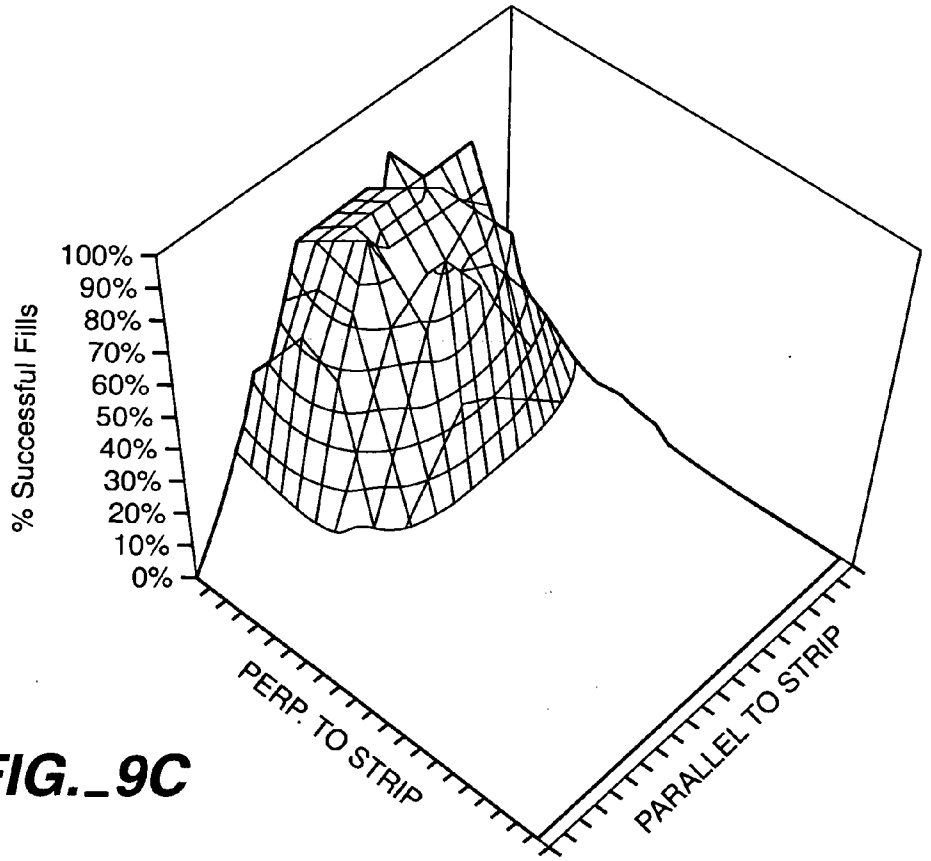
% Successful Fills
100%
90%
80%
70%
60%
50%
40%
30%
20%
10%
0%
PERP. TO STRIP
PARALLEL TO STRIP

FIG._9C

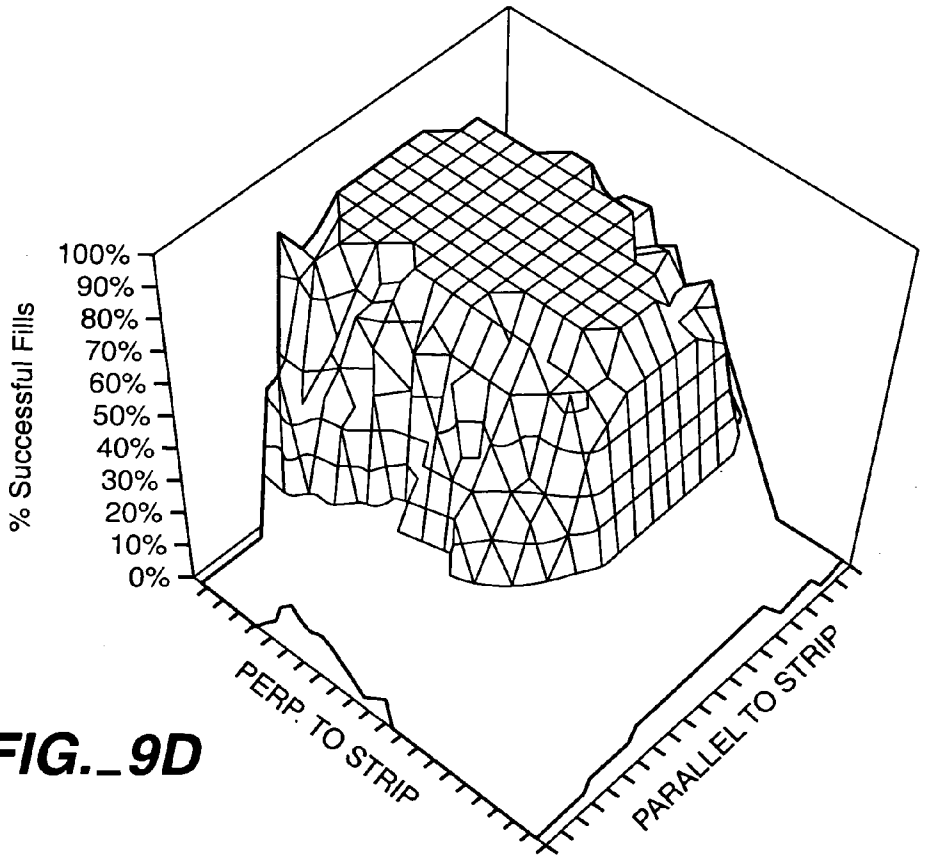
% Successful Fills
100%
90%
80%
70%
60%
50%
40%
30%
20%
10%
0%
PERP. TO STRIP
PARALLEL TO STRIP

FIG._9D

FIG._10

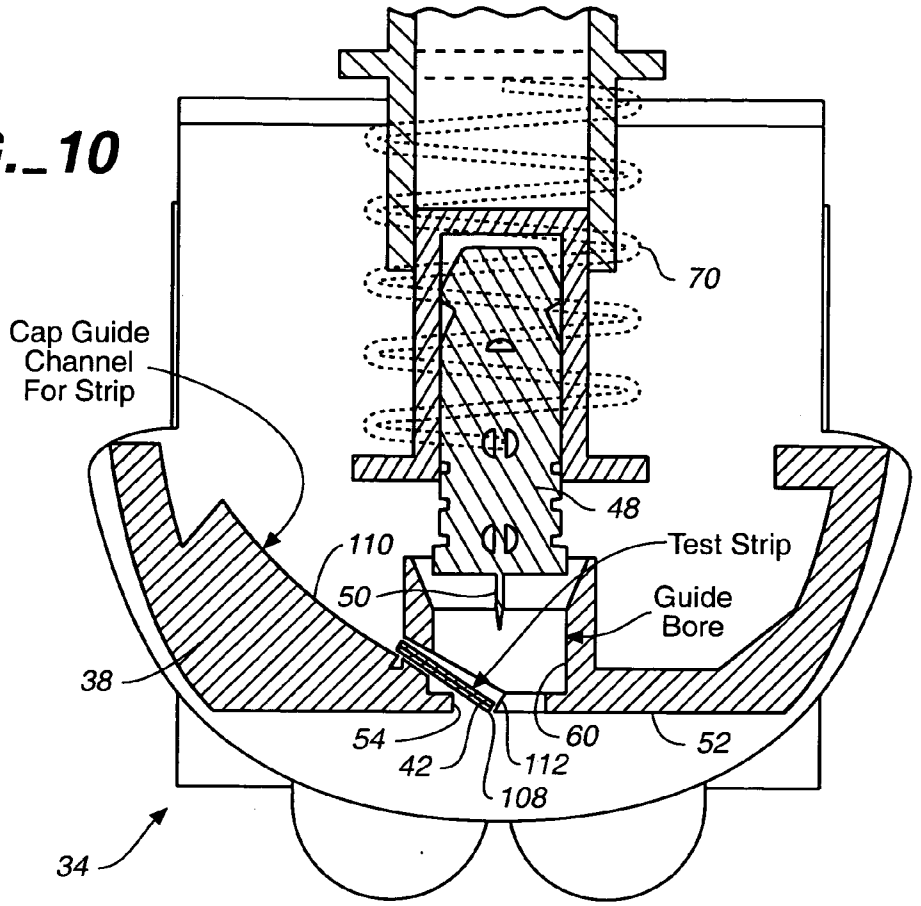
70
Cap Guide
Channel
For Strip
48
110
Test Strip
50
Guide
Bore
38
54
42
60
112
52
108
34

FIG._11

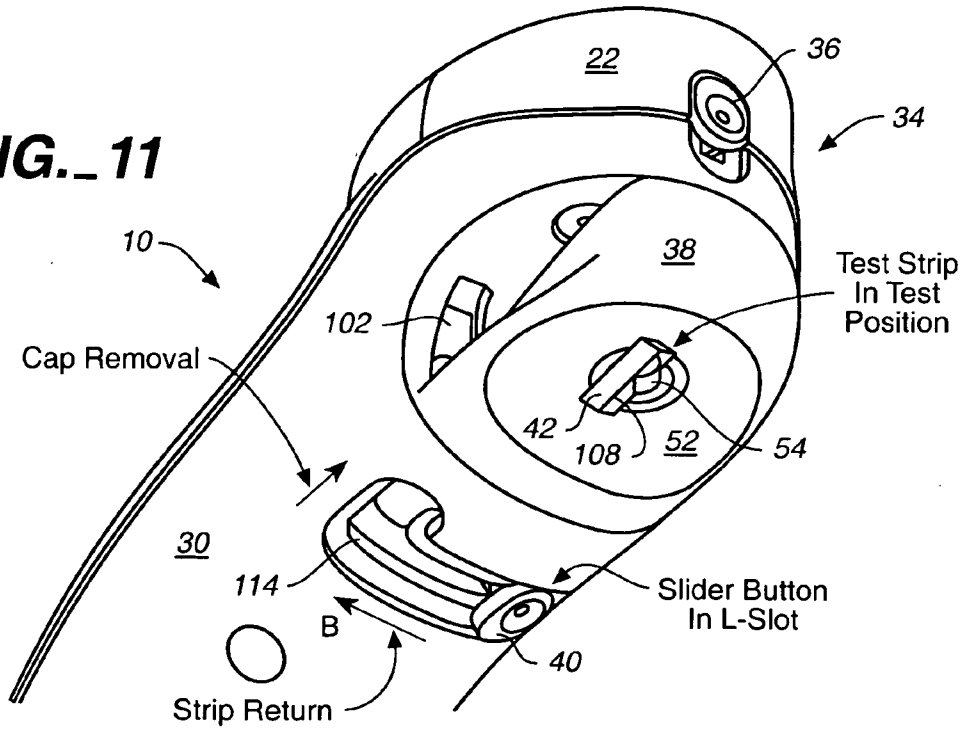
22
36
34
10
38
Test Strip
In Test
Position
102
Cap Removal
42
108
52
54
30
114
Slider Button
In L-Slot
B
40
Strip Return

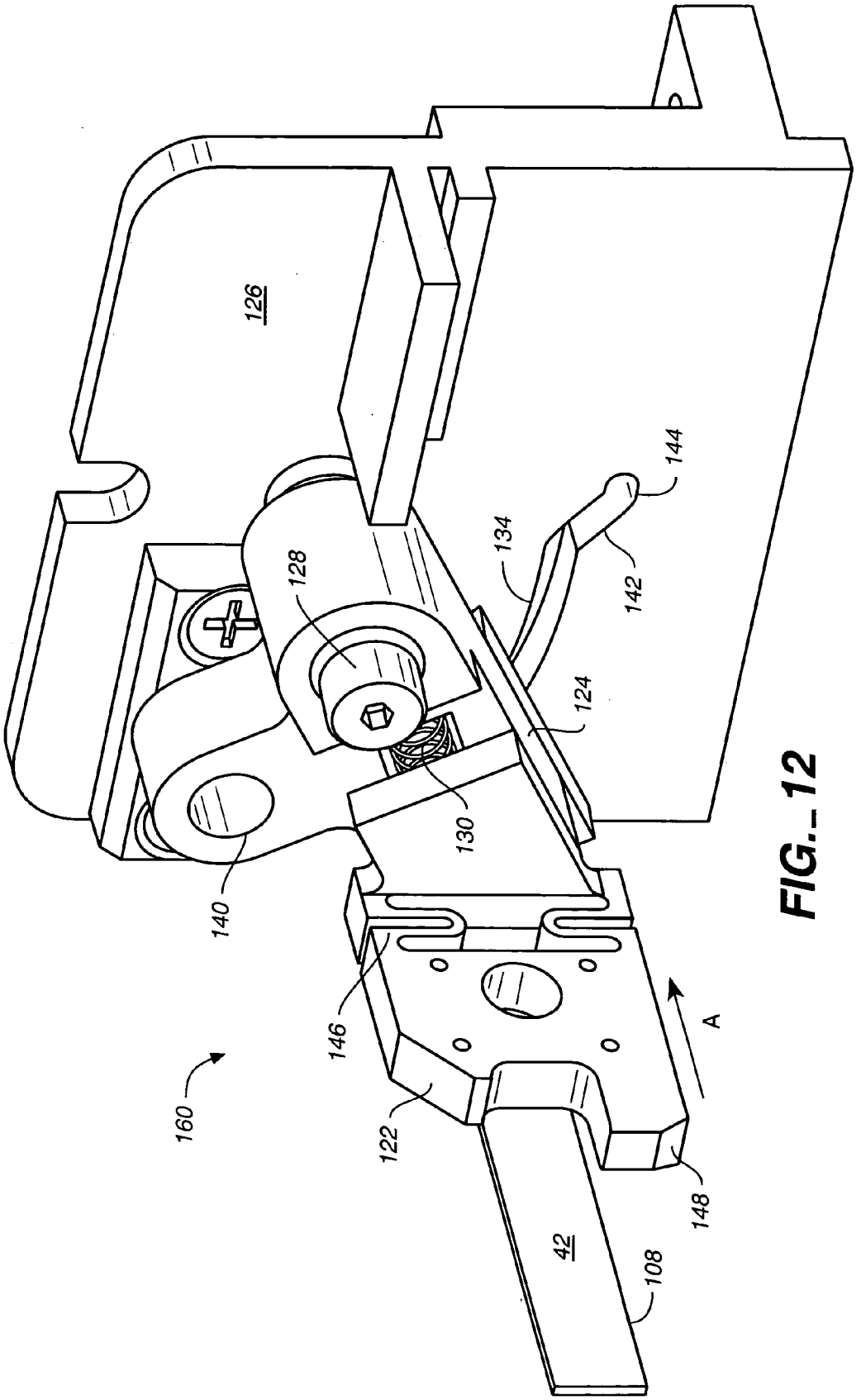

FIG._12

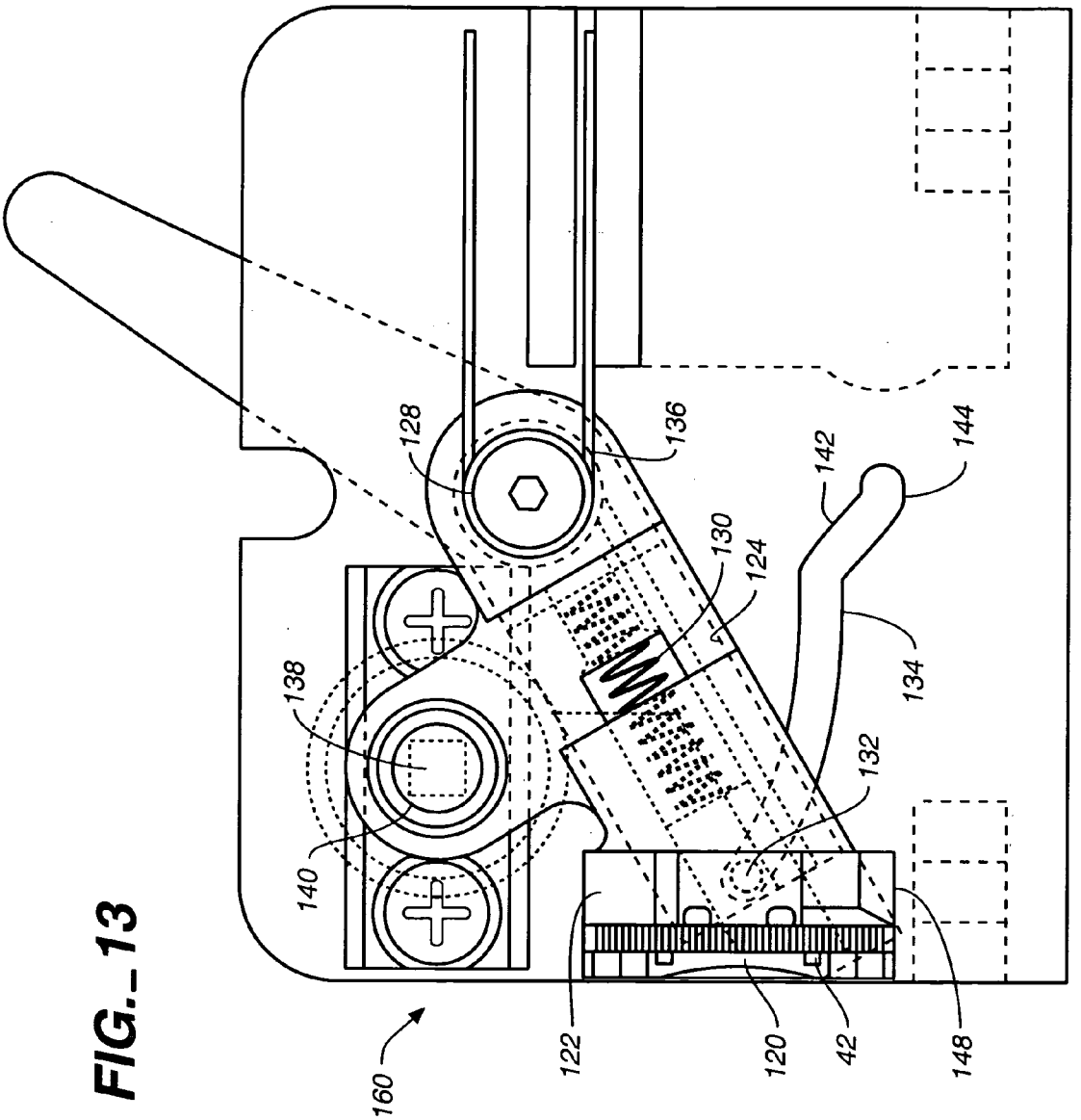

FIG._13

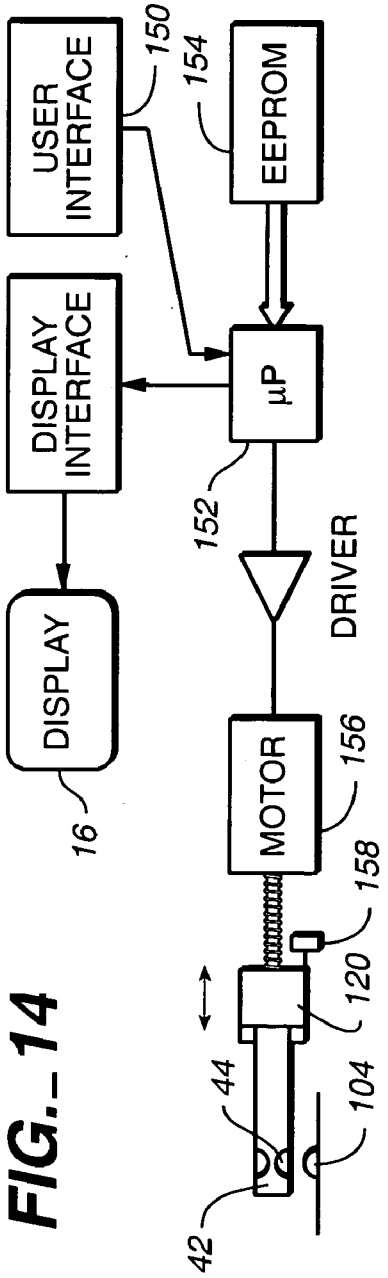
USER INTERFACE
150
154
EEPROM
DISPLAY INTERFACE
μP
152
DRIVER
DISPLAY
16
MOTOR
156
158
120
44
104
42

FIG._14

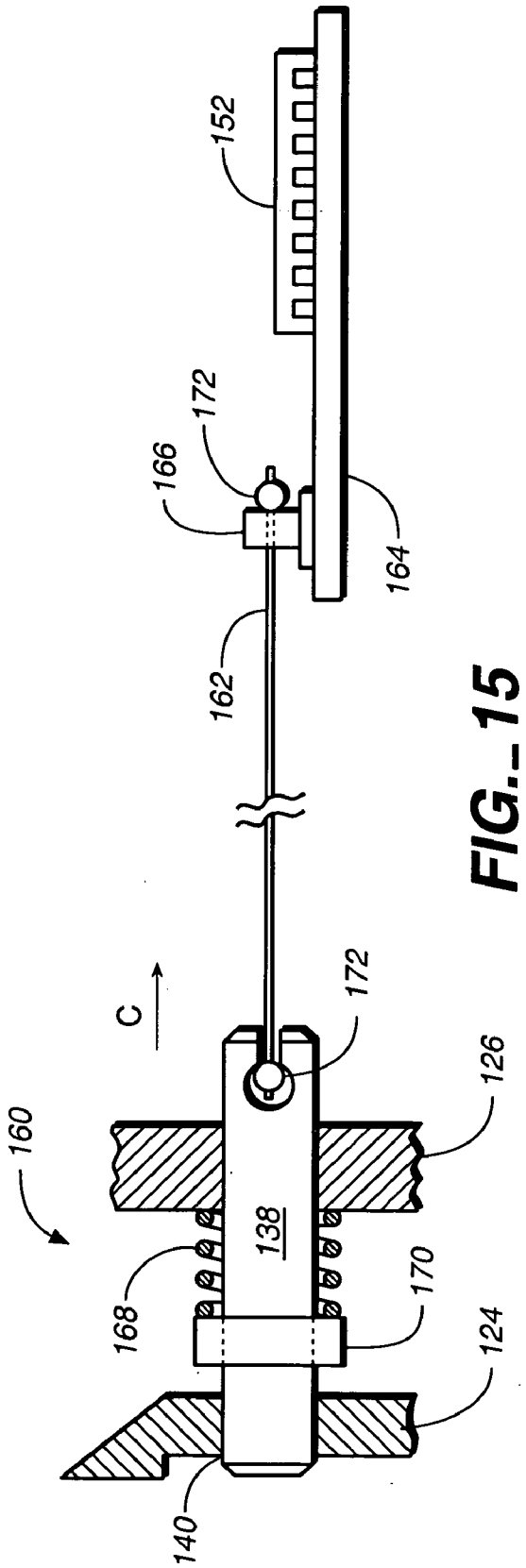
152
172
166
164
162
C
172
126
160
138
168
170
124
140

FIG._15

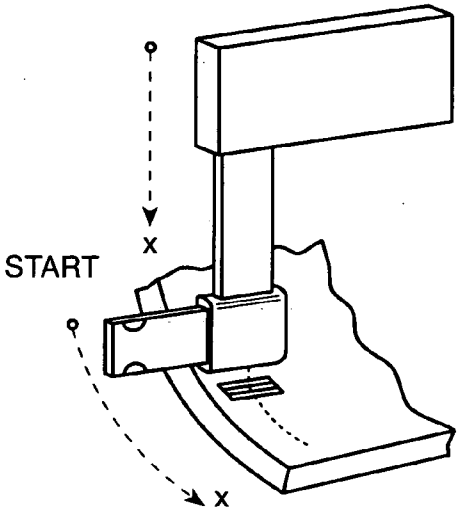

FIG._16A

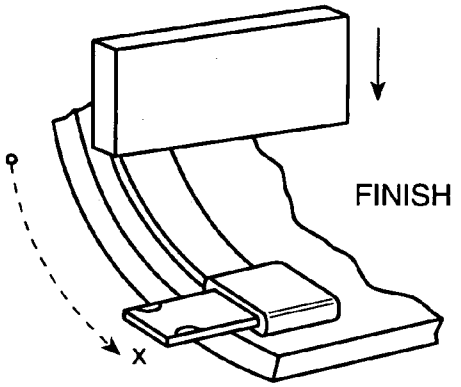

FIG._16B

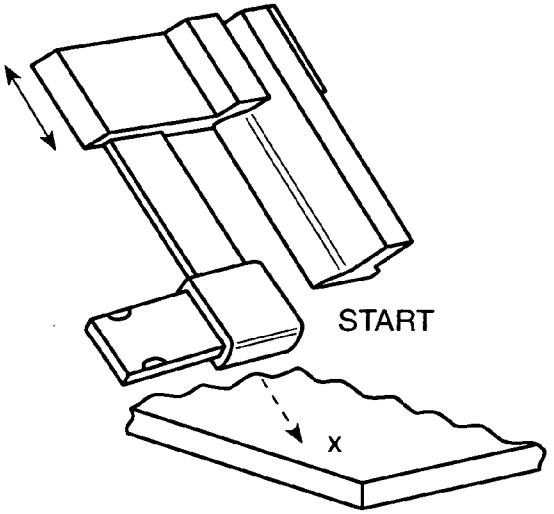

FIG._17A

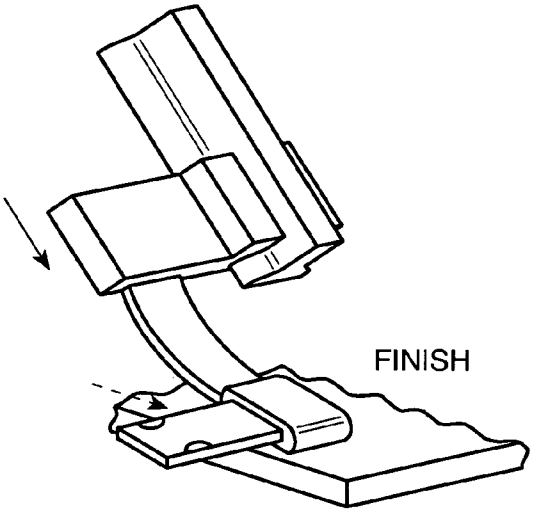

FIG._17B

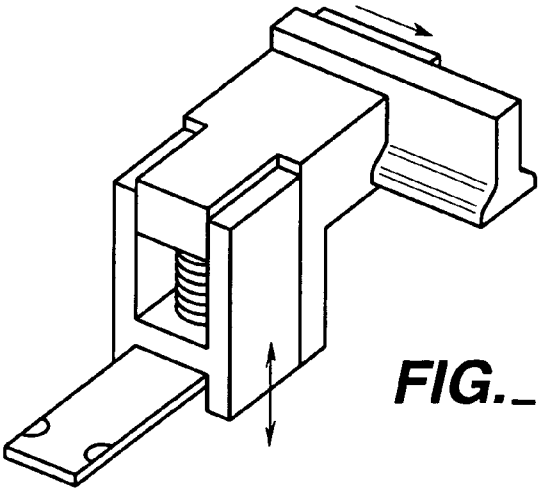

FIG._18

AUTOMATIC BIOLOGICAL ANALYTE TESTING METER WITH INTEGRATED LANCING DEVICE AND METHODS OF USE

CROSS-REFERENCE TO RELATED APPLICATION

[0001] This non-provisional application is related to and claims priority based on U.S. Provisional Application No. 60/424,414, entitled "Automatic Biological Analyte Testing Meter with Integrated Lancing Device and Methods of Use," filed on Nov. 6, 2002, which is incorporated herein in its entirety by this reference.

FIELD OF THE INVENTION

[0002] In general, this invention relates to skin lancing devices, analyte sensors and analysis meters for determining biological analyte levels, and more specifically, a portable device that integrates the functions of these separate devices in a single unit.

BACKGROUND OF THE INVENTION

[0003] Methods and devices used by a patient to measure a bioanalyte are well known in the art. For example, currently available technology allows a diabetic patient to monitor his own blood glucose level by drawing a blood sample with a lancing device, using an electrochemical sensor strip to capture the blood sample, and using an electronic meter connected to the sensor strip to analyze the blood sample and display the result. Until recently, relatively large sample volumes were required to be drawn, generally 3 microliters or more of blood or other biological fluid. These fluid samples are obtained from a patient, for example, using a needle and syringe, or by lancing a portion of the skin such as the fingertip and "milking" the area to obtain a useful sample volume. These procedures are inconvenient for the patient, and often painful, particularly when frequent samples are required. Less painful methods for obtaining a sample are known such as lancing the arm or thigh, which have lower nerve ending density. However, lancing the body in these preferred regions typically produces submicroliter samples of blood, because these regions are not heavily supplied with near-surface capillary vessels. The recently introduced FreeStyle™ Blood Glucose Monitoring System developed by TheraSense, Inc. of Alameda, Calif., is capable of consistently, accurately and precisely measuring sample sizes of only ⅓ microliter using this preferred "alternate site testing" (AST). U.S. Pat. No. 6,299,757, issued Oct. 9, 2001 to TheraSense, Inc. and incorporated herein by reference describes the construction and operation of the above FreeStyle system. U.S. Pat. No. 6,283,982 issued Sep. 4, 2001 to TheraSense, Inc. and incorporated herein by reference describes a lancing device that is used in the FreeStyle system.

[0004] A ⅓ microliter sample is about the size of a pinhead. Elderly patients and those with reduced eyesight and dexterity can have problems seeing and capturing such a small sample. Current testing procedures involving a lancing device, disposable lancets, meter and disposable test strips involve a lot of steps. It can be difficult for patients to remember all the steps and their proper order. Active patients testing outdoors, for example, can have a tough time juggling all of the different pieces during a test. Also, younger patients want to be able to quickly and discreetly test themselves without drawing attention with a lot of paraphernalia and testing steps.

[0005] What is needed and has not been provided by the prior art is a simpler testing method using a compact, unitary testing device.

SUMMARY OF THE INVENTION

[0006] The testing instrument of the present invention provides a method for obtaining a sample and testing that sample using a single device. Further, the instrument automatically performs all the testing steps in the proper order with the proper delays for each. The entire testing process is initiated by the patient with a single press of a button. The instrument automatically inserts and retracts a lancet into the skin with the proper speed and force, waits a predetermined time for a fluid sample to form on the skin, aligns the fill channel of a test strip with the small fluid sample and brings the two into contact to capture the sample, indicates to the patient when a sufficient sample has been captured, waits for electrochemical testing of the sample to be complete, displays the test result to the patient, and records all of the test results for later review, analysis and/or uploading to a computer network.

BRIEF DESCRIPTION OF THE DRAWINGS

[0007] **FIG. 1** is a top perspective view showing a unitary lancing device, test strip applicator and testing meter constructed according to the present invention.

[0008] **FIG. 2** is a side elevation view showing the unitary handheld instrument of **FIG. 1**.

[0009] **FIG. 3** is a bottom perspective view schematically showing the cap, test strip and lancet on the instrument of **FIG. 1**.

[0010] **FIG. 4** is a front cross-sectional view schematically showing lancet positioning features.

[0011] **FIG. 5** is broken away perspective view schematically showing a concentric spring lancing mechanism.

[0012] **FIG. 6** is a perspective view schematically showing a torsion spring lancing mechanism.

[0013] **FIG. 7A** is a perspective view of a first embodiment of an inventive lancet and cap combination.

[0014] **FIG. 7B** is a perspective view of a second embodiment of an inventive lancet and cap combination.

[0015] **FIG. 7C** is a perspective view of a third embodiment of an inventive lancet and cap combination.

[0016] **FIG. 7D** is a perspective view of a multi-pointed lancet.

[0017] **FIG. 7E** is a schematic view showing possible locations of test strip fill channels in relation to fluid samples created by the lancet of **FIG. 7D**.

[0018] **FIG. 7F** is a perspective view of a right-angle lancet.

[0019] **FIG. 8** is a side elevation view schematically showing a lancet retention and ejection mechanism.

[0020] **FIG. 9A** is a front elevation view schematically showing a vertical test trip trajectory.

[0021] **FIG. 9B** is a front elevation view schematically showing an arcuate test trip trajectory.

[0022] **FIG. 9C** is a graph showing blood sample location versus fill success rate for vertical trajectory test strips.

[0023] **FIG. 9D** is a graph showing blood sample location versus fill success rate for arcuate trajectory test strips.

[0024] **FIG. 10** is a front cross-sectional view schematically showing test strip guiding features.

[0025] **FIG. 11** is a bottom perspective view schematically showing the strip motion and cap removal interlock on the instrument of **FIG. 1**.

[0026] **FIG. 12** is a perspective view of a test strip moving mechanism.

[0027] **FIG. 13** is a side elevation view of the test strip mechanism of **FIG. 12**.

[0028] **FIG. 14** is schematic view showing a test strip fill channel location coding and translation scheme.

[0029] **FIG. 15** is fragmentary side elevation view showing the use of a Shape Memory Alloy to activate a test strip mechanism similar to that of **FIG. 12**.

[0030] **FIG. 16A** is a perspective view showing an alternative embodiment of a test strip moving mechanism in the loading position.

[0031] **FIG. 16B** is a perspective view showing an alternative embodiment of a test strip moving mechanism in the testing position.

[0032] **FIG. 17A** is a perspective view showing another alternative embodiment of a test strip moving mechanism in the loading position.

[0033] **FIG. 17B** is a perspective view showing another alternative embodiment of a test strip moving mechanism in the testing position.

[0034] **FIG. 18** is a perspective view showing yet another alternative embodiment of a test strip moving mechanism.

DETAILED DESCRIPTION OF THE PREFERRED EMBODIMENTS

[0035] Referring to **FIG. 1**, an integrated device **10** is shown that functions as an automatic lancing device, test strip applicator and testing meter. Integrated device **10** includes function buttons **12** and **14**, liquid crystal display **16**, display backlight button **18**, actuator button **20**, cocking collar **22** and lancing depth control thumbwheel **24**. Preferably device **10** has a plastic housing **26** having upper shell **28** and lower shell **30**, forming a main body portion **32** and head portion **34**.

[0036] Referring to **FIG. 2**, integrated device **10** has a lancet ejection lever **36**, a clear protective cap **38**, and a strip return and cap removal lever **40**. Disposable electrochemical test strip **42** with side fill channels **44** is shown in the loading position. The construction and manual use of a side-file test strip **42** is fully described in U.S. Pat. No. 6,338,790 issued on Jan. 15, 2002 to TheraSense, Inc., and U.S. application Ser. No. 09/434,026, filed Nov. 9, 1999, both incorporated herein by reference. Preferably, an existing test strip, such as the FreeStyle™ brand test strip developed and marketed by TheraSense, Inc., is used with the present invention rather than a propriety format designed especially for the integrated device. Advantages to using existing test strips include utilizing existing research and development, manufacturing, distribution, and inventory systems and having larger economies of scale, thereby allowing for a lower cost test strip. Also, a large user base of patients are already familiar with the existing strips, and if they desire, can alternately use the same strips in existing manual meters and in the automatic device.

[0037] Referring to **FIG. 3**, features of clear protective cap **38** are shown. Also shown is a vertically oriented, disposable lancet **46** having a plastic main body **48**, a sharp **50** and removable cap **51** for covering sharp **50** when not in installed in device **10**. Device cap **38** has a recess **52**, preferably for resting on a patient's arm or leg. In use, the device **10** is held as shown in **FIG. 2**, and preferably oriented generally above and perpendicular to the arm or leg. Aperture **54** is provided in the bottom of cap **38** for allowing at least the sharp **50** of lancet to pass through to the patient's skin during actuation. Slotted opening **56** is provided in one side of cap **38** to allow test strip **42** to pass from the outside loading position to the inside sample gathering position. Other than these two openings, cap **38** completely surrounds lancet **46** before, during and after testing.

[0038] To achieve good lancing results, a pressure applicator ring **57** should be provided around aperture **54**. Ring **57** helps provide the proper skin tension and capillary blood pressure to ensure that lancet **46** pierces the skin with minimal pain and a sufficient amount of blood is expressed from the wound. In the preferred embodiment, ring **57** is semi-toroidal in shape, has a major diameter of about 11 millimeters, stands about 2 millimeters off of cap **38**, and has a width or minor diameter of about 1 millimeter. It is also advantageous to provide a land 1 to 2 millimeters in width between aperture **54** and ring **57**. For best results, ring **57** and the enclosed land should be continuous, but they can also be segmented as shown. For further disclosure of pressure applicator ring design, see U.S. Pat. No. 6,283,982 issued Sep. 4, 2001 to TheraSense, Inc. and entitled "Lancing Device and Method of Sample Collection," incorporated herein by reference.

[0039] Lancet Guiding and Puncture Site Location Control

[0040] Referring to **FIG. 4**, the lancing operation of integrated device **10** will be described. Since integrated device **10** is to automatically bring the fill channel opening **44** of a test strip **42** (shown in **FIG. 2**) into contact with a small blood droplet brought up from a lancet puncture in human skin, the device should have very good control over the location of that puncture. Otherwise the mechanism would have little chance of successfully bringing fill channel **44** to the droplet. Control over the puncture site location is achieved, in part, by controlling the tolerances of mechanical features on lancet **46** and then guiding lancet **46** closely over the few millimeters of its travel immediately before it punctures the skin.

[0041] On the plastic lancet body **48** itself, the overall dimensions of some guiding feature, located as close to the puncturing tip as possible, should be held to very close

tolerances. Features in device **10** mate closely to this guiding feature, but allow it to slide in the direction of lancet travel, giving tight control over the location of the lancet body **48**. The location of the lancet sharp **50** within the plastic lancet body **48** is then carefully controlled with respect to the guiding feature, and finally the point of sharp **50** is located precisely with respect to the outside of sharp **50**.

[**0042**] In the embodiment of integrated device **10** shown in **FIG. 4**, the guiding feature on the lancet **46** is a cylindrical collar **58** about 3 mm from the needle point, concentric with needle **50**. The outside diameter of collar **58** is controlled to ±0.05 mm and needle **50** is concentric to the outside diameter of collar **58** within ±0.05 mm. The needle point is created by grinding **3** radially symmetric faces, each canted 10° from the needle circumference toward the axis of needle **50**. These faces meet at a common point located on the axis of needle **50** and defining the center of the needle's diameter.

[**0043**] The lancet guiding collar **58** slides inside a cylindrical bore **60** in device **10** preferably with a diametral clearance of no more than 0.13 mm. The lancet collar **58** and bore **60** engage at this close fit only for the final 5 mm of the lancet's travel (starting when the needle point is about 2 mm above the skin surface), as earlier engagement would reduce the kinetic energy of lancet **46** through friction and air pressure.

[**0044**] Referring to **FIG.** 7C, an alternative lancet **62** having a blade-shaped sharp **64** and plastic body **66** can be used instead of the needle-shaped lancet **46** described above. Testing has shown that bladed lancet **62** may draw more blood than needle lancet **46**. More importantly, because of constraints in the insert molding processes in which the metal sharps **50** and **64** are molded within plastic housings **48** and **66**, respectively, tighter tolerances between the sharp and outside surface of the lancet housing can be obtained by using bladed lancet **62**. This aids in more precisely maintaining the location of the blood drop formed on the skin after lancing, thereby allowing more precise alignment between test strip **42** and the blood droplet for more reliable filling of fill channel **44**.

[**0045**] Concentric Spring Lancing Mechanism

[**0046**] Referring to **FIG. 5, a** first lancet driving and retraction mechanism is shown. Feedback from marketing focus groups shows that customers desire an integrated device having a low profile head. In order to make the head **34** of integrated device **10** as short as possible, the lancet drive mechanism needs to have a short height. A typical drive system is comprised of a drive spring and a retraction spring, often placed in series (a line) or parallel (lying next to each other). In the first mechanism embodiment shown in **FIG. 5**, lancet **46** is received within lancet holder **68** which is captivated within drive spring **70**, which in turn is nested within retraction spring **72**. This concentric arrangement minimizes the vertical space the components occupy, and minimizes any eccentric forces that might disturb the predictable linear motion of lancet **46** on firing.

[**0047**] Torsion Spring Lancing Mechanism

[**0048**] Referring to **FIG. 6, a** second lancet driving mechanism is shown. A typical wound-wire coil spring, such as springs **70** and **72** described above, applies a non-uniform force that depends on the amount it is deflected. It also can compress only to a minimum height determined by the wire diameter and number of coils (solid height). One way to obtain more uniform spring force and avoid the limitations of a spring's solid height is to use a torsion spring **74** to drive lancet holder **68'**. Torsion spring **74** can be adjusted for force and travel without significantly affecting the overall mechanism size because the body of the spring does not lie in-line with the rest of the mechanism.

[**0049**] Large Lancet Cap for Handling

[**0050**] Referring to **FIGS. 7A, 7B** and 7C, alternate embodiments of lancets and caps are shown. Another factor that affects the overall size of the lancing mechanism is the length of the lancet itself. Traditional disposable lancets, such as shown in **FIG. 3**, have an elongate body **48** and a short cap **51**. In order to reduce the profile of device head **34**, a shortened lancet **76** can be used that is just long enough to engage lancet holder **68** (shown in **FIG. 6**.) This short length might make the lancet difficult for the user to handle and install, so the protective cap **78** (that is removed before use) should be made much larger than usual to aid handling. Cap **78** may be an integrally molded, pull-off tab such as shown in **FIG.** 7A, or may be a hollow cap **80** with large handle molded separately or in the same cavity as lancet **76** and placed over lancet **76** after molding, such as shown in **FIG. 7B**. A hollow cup or solid "pin cushion" type area **82** can be provided at the opposite end of cap **78**, as shown in **FIG.** 7A, to cover the sharp during removal from the device and disposal.

[**0051**] Referring to **FIG. 7C, a** lancet **62** having a blade-shaped sharp **64**, short body **66** and large cap **84** is shown. Traditional and previously described lancets with needle-shaped sharps have their caps removed by twisting. Twisting off the cap of a bladed lancet would likely damage or move the skin piercing edge, resulting in a painful and/or ineffective lance, or inaccurately placed droplet of blood. To assist patients who may be used to twisting caps off of lancets, non-twist features have been incorporated into lancet **62**. First, enlarged cap **84** is formed in the shape of an arrow, reminding patients to pull cap **84** off of lancet **62** rather than twisting. Second, non-circular mating collars **86** and **88** are provided on lancet body **66** and cap **84**, respectively. When cap **84** is mated with body **66**, these collars **86** and **88** are keyed or aligned with each other. Twisting would cause these non-circular collars **86** and **88** to be misaligned, suggesting that this action should not be undertaken. Third, a widened portion **90** is provided on sharp blade **64** away from the narrow distal end, providing resistance to twisting, or making damage to sharp **64** from twisting unlikely. Widened portion **90** provides other benefits as well, such as acting as a redundant maximum sharp penetration depth control in the event of failure of other depth control measures. Widened portion **90** also aids in fabrication of lancet **62**, as this configuration is less susceptible to chattering during grinding.

[**0052**] Lancet cap **84** is also provided with pin-cushion type areas **82'** and **82"**, either of which can be used for receiving sharp **64** after use and prior to disposal. Area **82"** offers the advantage of allowing the user to extend cap **84** up into device cap **38** to cover sharp **64** while lancet **62** is still in place in integrated device **10**. In this manner, used lancet **62** and cap **84** can be ejected from device **10** together as a unit so that the user need not handle small lancet **62** separately while trying to align it with cap **84**.

[0053] Bladed Lancet Oriented Parallel to Strip

[0054] If the width of the cutting edge of sharp **64** is such that it creates an oblong rather than circular blood droplet footprint, the cutting edge should be aligned parallel to test strip **42** (i.e. parallel to the axis of device **10**) rather than perpendicular to it, since this is the critical alignment axis, as will be described later. The flat shape of lancet body **66** allows for such alignment and prevents misalignment.

[0055] Multi-Pointed Sharp

[0056] Referring to **FIG. 7D** a lancet **116** having a multi-pointed sharp is disclosed. In this embodiment the lancet has two points **118**, although in other embodiments (not shown) three or more points **118** could be arranged inline or in other patterns. Each point **118** creates its own skin puncture and blood droplet **104**. (Two blood droplets **104**, if they are spaced closely together and/or become large enough, may merge into a single oblong or round blood drop.) If integrated device **10** is arranged so that points **118** are aligned parallel to strip **42**, the blood droplet **104** and fill channel **44** positioning shown in **FIG. 7E** results. As shown, the longitudinal position of fill channel **44** relative to blood droplets **104** can be widely varied while still maintaining enough contact with at least one blood droplet **104** to cause fill channel **44** to wick up sufficient blood. Therefore, the use of a multi-pointed sharp allows the positional tolerances of strip **42** and/or lancing to be relaxed while improving strip fill performance.

[0057] Right-Angle Lancet

[0058] Referring to **FIG. 7F, a** right-angle lancet **89** is disclosed. The main advantage of this configuration is that it has an elongated body similar to that of traditional lancet **46** (shown in **FIG. 3**) making it easy to hold and manipulate, but this long dimension is oriented perpendicular to the lancing axis, thereby contributing to the previously stated goal of making device **10** low profile in height. The body of lancet **89** should be flat or keyed to allow the lancet holding mechanism to keep sharp **50** oriented properly with the lancing axis. Lancet **89** can be driven downward in a pure vertical translation along a straight lancing axis, or it can be rotated about a horizontal axis such that sharp **50** travels in an arc and becomes perpendicular to the patient's skin just as it punctures the skin.

[0059] Lancet Retention and Ejection

[0060] Referring to **FIG. 8**, the mechanism by which a disposable lancet **76** is retained within the plunger portion **91** of the integrated device lancing subsystem is shown. Lancet body **77** is generally flat and has a notch **92** on each edge for receiving barbs **94** on the plunger's flexible retaining arms **96**. The angles of the lancet's notches **92** and the arms' barbs **94** are chosen to draw lancet **76** into the plunger.

[0061] To eject lancet **76**, the lancing subsystem mechanism urges lancet **76** out of plunger **91**, forcing retaining arms **96** to flex outward. Once lancet **76** has moved far enough, barbs **94** bear on the tapered tail **98** of lancet **76** and their inward force translates to a longitudinal displacement of lancet **76**—they will cause lancet **76** to eject.

[0062] The mechanism may use a linear plunger to eject the lancet (pushing in the downward direction in **FIG. 8**), or a wedge that bears between some feature on lancet and the plunger body. For instance, to further reduce the height of plunger mechanism **91**, a wedge-shaped eject lever could extend perpendicularly into the plane of **FIG. 8** and contact rear tapered edge **100** to urge lancet **76** downward and out of device **10**. Preferably, an interlock mechanism is incorporated so that lancet **76** cannot be ejected while cap **38** is still in place. Alternatively, the ejection lever can be located inside cap **38** to achieve this same result.

[0063] Strip Loading Protected from Sharp

[0064] Referring again to **FIG. 3**, loading of test strip **42** will now be discussed. In the compact integrated device **10**, test strip **42** and sharp **50** are located fairly close together. In order to eliminate the likelihood of the user accidentally sticking himself on the lancet sharp **50** while inserting a test strip **42**, integrated device **10** is arranged so that a test strip **42** can be inserted without removing the protective cap **38** from head **34** of the device.

[0065] Cap **38** covers the lancet sharp **50** at all times and is removed only to replace the lancet **46**. Test strip **42** is inserted into a slot **102** in lower housing shell **30** on the outside of cap **38**, and the device mechanism moves strip **42** from this loading position into the interior of cap **38** and to the testing position near lancet sharp **50**. The same mechanism moves test strip **42** away from sharp **50** and returns it to the load position for disposal after a test.

[0066] Test Strip Trajectory

[0067] Referring to **FIGS. 9A and 9B**, strip trajectories will be discussed. One of the biggest challenges in developing an automated, integrated device is creating an autonomous mechanism that can introduce a test strip **42** into a small blood sample and get an acceptably high rate of successful fills (blood entering test strip test chamber). Laboratory experiments indicate that the trajectory along which strip **42** moves into contact with the blood droplet **104** has a significant effect on this success rate.

[0068] Referring to **FIG. 9**A, initial experiments held a test strip **42** at a 65° angle to the sample platform **106**, and moved strip **42** along a straight line perpendicular to platform **106**. The edge **108** of strip **42** entered droplet **104** from above and stopped moving once it contacted the sample substrate (a glass slide). This arrangement produced erratic fill rate results, and showed a limited acceptable range of mislocation tolerance between droplet **104** and the strip **42** nominal location, as shown in **FIG. 9C**.

[0069] Referring to **FIG. 9**B, in subsequent experiments the test fixture was modified so it held test strip **42** at a 35° angle and moved it along a 25 mm radius arc whose axis was parallel to strip **42** and sample platform **106**. The axis location was chosen so that edge **108** of strip **42** was tangent to sample platform **106** at the lowest point of the trajectory. When in use, strip **42** would be moving approximately parallel to and touching the surface of the sample substrate as fill channel **44** on strip edge **108** contacted droplet **104**. This trajectory provides much more consistent results and a higher successful fill rate, as well as a significantly larger tolerance for mislocation, as shown in **FIG. 9D**. It is believed that the wider tolerance is due to the "squeegee" action of this trajectory, as it tends to scrape blood off the substrate and push it along in front of strip **42** until strip **42** stops moving.

[0070] Referring to **FIGS. 12 and 13**, a test fixture demonstrating an alternative strip trajectory is disclosed. In this

mechanism, one end of test strip **42** is received within electrical connector **120** which is attached to mount block **122**. Mount block **122** is slidably attached to pivot arm **124**, which in turn is pivotably attached to base plate **126** with pivot bolt **128**. Compression spring **130** biases mount block radially outward from pivot bolt **128**. Guide pin **132** is attached to mount block **122** and travels in cam slot **134** formed in base plate **126**, causing spring **130** to compress as mount block **122** and guide pin **132** travel from left to right along cam slot **134**. Torsion spring **136** mounted on pivot bolt **128** drives pivot arm **124** counter-clockwise when release pin **138** is pulled from hole **140** in pivot arm **124**, such as by an electric solenoid, motor, or manual release lever.

[**0071**] The trajectory of strip **42** in this embodiment is controlled by cam slot **134**. It can be seen that the right end of cam slot **134** has a portion **142** that angles downward just before a short horizontal portion **144** at the right extremity. Angled portion **142** yields a strip trajectory that prevents device cap **38** from having a knife-like edge along the slotted opening where test strip **42** partially emerges from cap **38** to contact the patient's skin. Short portion **144** allows strip **42** to squeegee along the patient's skin before it comes to rest. In the preferred embodiment, this travel distance along the skin is about 1 mm. Making this distance longer increases the risk that strip **42** may possibly be impeded by a skin irregularity, such as a raised mole. Making this distance shorter increases the risk that strip **42** lands directly on sample **104** and does not capture the entire sample when moving along the skin. In the preferred embodiment, strip movement mechanism **160** is designed to have test strip edge **108** come to rest in the center of sample **104**, with tolerances such that edge **108** may undershoot the sample center by 0.005 inch and may overshoot it by 0.010 inch.

[**0072**] In this embodiment, the remainder of cam slot **134** (to the left of angled portion **142**) is not an arc concentric with pivot bolt **128** because it is desirable to have the test strip loading location farther to the left of the lancing location to allow sufficient room for the user's fingers to insert the strip. This non-concentric slot **134** is the reason for the slidable, spring loaded arrangement between mount block **122** and pivot arm **124**.

[**0073**] Other strip angles and trajectories can be alternatively used, keeping in mind that strip fill performance is improved when the strip approaches the target sample from the side. Also, good machine design practice dictates that the maximum pressure angle (the angle between a line drawn from the axis of rotation to the point of contact, and a line orthogonal to the cam surface at the point of contact) be no more than 30°. In other alternative embodiments, the entire strip need not be moved. For instance, the proximal end of strip **42** can be held stationary while the distal end is deflected away from and/or toward droplet **104** with cams, rollers, guides or other suitable devices. Or, as shown in **FIGS. 16A, 16B**, 17A, 17B, or **18**, the strip can be translated in a vertical or inclined line and the squeegee action can be accomplished by a compliant member such as a leaf spring or compression spring. Alternatively, the distal end of strip **42** may follow a helical path as the proximal end is simultaneously lowered and rotated (not shown.)

[**0074**] Strip Guiding and Location Control

[**0075**] To aid in aligning test strip **42** more precisely in its longitudinal direction with the target blood droplet, connector **120** is preferably biased outwardly when in the strip loading position (as shown in **FIG. 12**) and allowed to be urged inwardly in the direction of arrow A as mount block **122** travels to the blood acquisition position. This can accomplished by wave washers between pivot bolt **128** and pivot arm **124**, or by other compliant measures such as flexure **146** formed in mount block **122**. As mount block **122** moves downwardly, cam surface **148** on its distal end can contact a mating feature on device cap **38** to move test strip longitudinally into a known and repeatable position. In this manner the number of parts requiring closely controlled tolerances on their interfaces for this longitudinal positioning can be limited to strip **42**, connector **120**, mount block **122** and cap **38**, instead of a whole chain including the above parts and others having moving interfaces such as pivot arm **124**, pivot bolt **128**, base plate **126**, upper housing shell **28**, lower housing shell **30**, etc., which would create a much larger tolerance stack-up and increase costs of fabrication and assembly. Preferably, the cam surface **148** could be located directly on connector **120** to further eliminate the tolerances associated with mount block **122**.

[**0076**] Referring to **FIG. 10**, additional strip guiding features are disclosed. Not only should the integrated automated system have good control over the lancing site location as described above, it should also tightly control the location of the test strip fill channel **44**. To accomplish this, integrated device **10** has a carefully sized channel **110** that serves to guide test strip **42** from its load position down to the test site and locate it exactly with respect to the lancing site. During strip motion, channel **110** can even ensure that strip **42** is fully seated in its connector by gradually reducing lengthwise clearance along the travel path. Once strip **42** approaches the test position, its critical edge **108** can be spring-loaded to register against surface **112** inside cap **38** that tightly controls its location with respect to the lancet guide bore **60**.

[**0077**] In the preferred embodiment shown, guide channel **110** and registration surface **112** for test strip **42**, guide bore **60** for lancet **46**, and a registration surface for contacting cam surface **148** on mount block **122** or connector **120**, are all molded into the same single part (protective cap **38**). This allows tight control of the dimensional relationship between these features by reducing the tolerance stack-up between them and gives the best opportunity of ensuring that strip **42** will contact blood droplet **104**.

[**0078**] Variable Strip Approach Timing

[**0079**] In order for the above-described strip approach to succeed, blood sample **104** should be present on the skin before strip **42** moves into position. Since human physiology varies such that it cannot be predicted exactly how long after lancing an appropriate-sized droplet will appear on the patient's skin, integrated device **10** preferably can be adjusted by the user to account for this variation.

[**0080**] In the preferred embodiment of integrated device **10**, a processor-based electro-mechanical system controls the amount of time that elapses between firing of the lancet and the approach of test strip **42** to the test site. Patients who bleed easily can adjust this duration to be relatively short (for example 5 seconds) and those who bleed slowly can adjust it to be longer (for example 20 seconds.) Alternatively, a purely mechanical system for this adjustable delay may be used.

[0081] This adjustability allows the total integrated device test time to be as quick as possible, not burdening all patients with a fixed wait time long enough for those who bleed slowly.

[0082] Strip Motion/Cap Removal Interlock

[0083] Referring to **FIG. 11, a** cap removal interlock will be discussed. In order to protect the strip handling mechanism and ease changing of lancet **46**, strip **42** should be returned to its loading position before the user removes cap **38**. The preferred embodiment of integrated device **10** ensures this by combining strip return and cap removal into a single user-operated control. This control is a sliding button **40** that runs in an L-shaped slot **114**. To return strip **42** from the testing position to the load/unload position, the user slides button **40** along the long leg of L-slot **114**, as shown by arrow B. To remove cap **38**, the user slides button **40** along the long leg of L-slot **114** and then pushes it into the short leg of slot **114**. This way the user is forced to return strip **42** to the load/unload position before he can remove cap **38**.

[0084] Test Strip Ejection

[0085] Traditional blood glucose testing utilizing a test strip **42** requires touching one end of strip **42** to the blood sample of interest. Once the test is complete, the bloodied test strip **42** needs to be disposed of. For health and safety reasons, it would be preferable not to require the user to handle used strips **42** after testing. Accordingly, a strip-eject mechanism can be employed on integrated device **10** that allows the user to remove a used strip **42** from device **10** without touching the strip. This mechanism can use pinch-rollers to drive strip **42**, a plunger to push strip **42** out of its connector, or similar well-known mechanism.

[0086] Overall Operation

[0087] Referring mainly to **FIG. 1**, the overall operation of integrated device **10** to measure blood glucose will be described. The patient first pushes cap removal lever **40** over and up along L-shaped slot **114** to remove device cap **38**. If a used lancet **46** still remains in lancet holder **68**, ejection lever **36** is pushed downward to eject lancet **46** for disposal. Preferably the ejection mechanism is designed such that it cannot be actuated while device cap **38** is still in place. A fresh lancet **46** is inserted into lancet holder **68**, and lancet cap **51** is removed. Lancet holder **68** should be designed such that it provides a retention force that is greater than the force required to separate cap **51** from lancet **46**, so that lancet **46** is not pulled from lancet holder **68** when the patient tries to remove cap **51**. Device cap **38** is then reinstalled on device **10**. Alternately, cap aperture **54** and lancet cap **51**, **78**, **80** or **84** can be sized such that device cap **38** can be reinstalled before the lancet cap is removed from the lancet.

[0088] The patient next removes a fresh test strip **42** from its desiccated vial and inserts the proper end into a mating connector (not shown) within slot **102** in device housing **26**. Preferably test strip **42** includes a conductive bar across an outer face such that the insertion of strip **42** powers on device **10**. Instructions guiding the patient through the testing process can be displayed on LCD **16**. Alternately, function button **12** can be used to turn on device **10**.

[0089] With a fresh lancet **46** and test strip **42** loaded, integrated device **10** is cocked by pulling up on cocking collar **22**, and then placed over the test site on the patient, with recess **52** of cap **38** resting on the skin. Preferred testing sites include the forearm, upper arm, outer thigh, calf, and around the base of the thumb. Once device **10** is positioned, the patient presses actuator button **20** which causes lancet **46** to drive downward penetrating the skin and then retract. After a predetermined and preferably user-settable delay for allowing blood to emerge from the lancing site on the skin, test strip **42** is brought down along an arcuate path into contact with the blood sample. The patient holds device **10** in this position until device **10** emits an audible and/or visual indication that a sufficient amount of blood has been drawn into fill channel **44** of test strip **42** (detected by electrical measurements on strip **42**.) Device **10** then performs the appropriate measurements on the electrochemical process within test strip **42**, and when complete displays the result on LCD **16**. Further manipulation of data or settings can be performed by pressing function buttons **12** and **14**.

[0090] After a test is complete, lever **40** is pushed towards the short leg of L-shaped slot **114** to return used strip **42** to the load/unload position outside of protective cap **38**. Strip **42** can then be removed from device **10** for disposal by pressing a strip eject lever or by manually removing strip **42**. Used lancet **46** can also be removed at this time for disposal, as previously described.

[0091] Control Solution Test Scheme

[0092] Occasionally testing needs to be performed with a fresh test strip **42** and a "control solution" instead of blood to ensure that device **10** is calibrated and working properly. For this procedure, the patient uses function button **12** and/or **14** to indicate to device **10** that a control solution test will be performed. Cap **38** is removed, either before or after a fresh test strip **42** is inserted into device **10**. To avoid risk of accidental lancing, lancet **46** is preferably capped or removed during this process. With cap **38** out of the way and test strip **42** in the load/unload position, a drop of control solution can be applied to fill channel **44** of test strip **42**. This test proceeds much like the blood glucose test described above, but strip **42** is never moved from the load/unload position and lancet **46** is never fired. After the control solution test, test strip **42** is ejected and cap **38** is replaced.

[0093] Fill Channel Location Coding

[0094] Referring to **FIG. 14, a** scheme for encoding test strips **42** with fill channel **44** location data is disclosed. In the manufacture of disposable test strips such as for testing blood glucose, it can be difficult to produce large quantities of strips **42** all having their fill channels **44** located a predetermined distance from an end of the strip **42** within a narrow tolerance. Since the blood samples **104** to be acquired by strips **42** are becoming quite small (e.g. 0.050 inches in diameter), a wide fill channel location tolerance can make it difficult or impossible for an integrated testing device to automatically align the test strip **42** with the blood droplet **44**. This problem can be solved by providing integrated device **10** with a motor or other prime mover to position the strip **42** longitudinally, and encoding the fill channel location for each strip **42** in a calibration code specific to that strip or batch of strips. When the calibration code is entered by the user or detected from strip **42** automatically, device **10** can then position the test strip **42** accordingly.

[0095] Currently, many disposable test strips are sold with a code to calibrate the meter to the electrochemistry found

on that particular test strip. This calibration code can be, for example, one of four numbers. If the fill channel location is characterized and similarly categorized as being within one of four possible ranges, it can be assigned one of four letters. The number and letter calibration codes can be merged together to form a 4 by 4 array. In this way, one of 16 different numbers can be used for each test strip, with each number uniquely identifying the electrochemistry calibration and fill channel location.

[**0096**] As shown in **FIG. 14**, the user enters a calibration code, which includes positional data, via the user interface **150**. Microprocessor **152** then reads data from an EEPROM **154** which indicates how far to advance motor **156** to align fill channel **44** to the target droplet **104**. Home sensor **158** can be used to provide a location reference.

[**0097**] Shape Memory Alloy Firing Mechanism

[**0098**] Referring to **FIG. 15**, an alternative method for firing lancing mechanism or strip delivery mechanism is disclosed. In the preferred embodiment of integrated device **10**, the lancing or plunger mechanism **91** (shown schematically in **FIG. 8**) is cocked by pulling up on cocking collar **22**, and fired by pressing actuator button **20** (both shown in **FIG. 1**.) The test strip moving mechanism **160** (shown in **FIGS. 12 and 13**), on the other hand, is not directly actuated by the user but is instead controlled by the device's microprocessor **152**, which ensures a suitable delay between lancet firing and test strip movement as described above. An electric solenoid can be employed between microprocessor **152** and release pin **138**, but given the typical force required to move pin **138**, the size of the solenoid and the batteries required to drive it is unwieldy. Since pin **138** does not need to be extracted with great speed, a motor and lead screw arrangement can be employed instead of a solenoid, but this introduces complexity, cost and reliability issues. To overcome the above drawbacks, a shape memory alloy (SMA) wire can be used to drive release pin **138**.

[**0099**] In the preferred embodiment shown, a Nickel-Titanium alloy, know as Nitinol, is used in the shape of a wire **162**. At room temperature, a nitinol wire can easily be stretched 3-5% beyond its fabricated length. Upon heating the wire above a certain temperature threshhold, the wire will return to its fabricated length with some force. At the time test strip **42** is to be moved, microprocessor **152** on printed circuit board **164** initiates a current through anchor post **166**, which passes through wire **162** and returns to PCB **164** through a chassis ground. The current heats up Nitinol wire **162**, causing it to contract to its original length. The shortened length of wire **162** pulls release pin **138** in the direction of arrow C against the force of compression spring **168** located between base plate **126** and stepped shoulder **170** on pin **138**. When the end of pin **138** moves enough to disengage from hole **140** in pivot arm **124**, test strip moving mechanism **160** moves the test strip as previously described. When the current running through wire **162** is shut off, wire **162** cools and is again stretched by the compression spring **168**. This allows spring **168** to push pin **138** back out again (opposite the direction of arrow C) to engage pivot arm **124** when arm **124** is returned to the raised position.

[**0100**] Ferules **172** or clamps are preferably crimped onto ends of wire **162** to provide attachment points. To vary the forces and contraction lengths achieved by Nitinol wire in a small space and to perhaps make electrical connections easier, each end of the wire can be connected to its own post **166** on PCB **164**, and the wire can be run through a small, insulated pulley connected to the end of pin **138**. Additional pulleys or turning points can be attached or formed within the device housing. In another alternative embodiment, electrical connectivity can be provided to the wire by attaching electrical wires near the ends instead of passing the current through the anchor points. Shapes other than wire, such as a rod, bar, sheet or coil can be used. Nitinol or other shape memory alloys can be used to provide a tensile or compressive force to move pin **138**. Alternately, a piezoelectric material can be used.

[**0101**] The preferred embodiment of integrated device **10** will have a specified operating temperature range, for example between 0 and 40 degrees Celsius. To ensure that wire **162** reaches the proper temperature to contract and operate the release mechanism properly when device **10** is anywhere within the specified temperature range, conventional control circuitry would always apply the maximum electrical current required to heat the wire from the bottom of the temperature range to the temperature required for wire contraction. However, device **10** would typically not be operated at the bottom of the predetermined operating range, so much of the current applied to wire **162** during each use would merely be drained from the device's batteries without providing any benefit. To overcome this drawback, device **10** should utilize a temperature sensor (which can also be used for other testing functions) and a current switching circuit that supplies only enough current to elevate wire **162** from the ambient temperature to the contracting temperature. Rather than supplying a constantly decaying current from a charged capacitor to wire **162**, the device's microprocessor can be configured to sense the ambient temperature and control a switch with one of its outputs to provide a series of pulses of current to wire **162** to cause its contraction. As ambient temperature decreases, the microprocessor provides pulses of longer duration, approaching a constant source of current as the ambient temperature approaches the bottom of the predetermined operating range. Alternatively, rather than pulsing the current, the duration of the current can be controlled based on the ambient temperature (i.e. a shorter duration for a higher ambient temperature.) By employing this inventive circuitry, smaller batteries can be used and/or longer battery life can be achieved, thereby making device **10** more compact and less expensive.

[**0102**] The invention has been described with reference to various specific and preferred embodiments and techniques. However, it will be apparent to one of ordinary skill in the art that many variations and modifications may be made while remaining within the spirit and scope of the invention.

1. An integrated device for sampling and testing an analyte comprising:

a housing;

a lancing device operatively coupled to said housing for sampling an analyte;

a test strip operatively coupled to said housing for substantially capturing at least a portion of the analyte; and

a display unit mounted to said housing for displaying a result corresponding to the captured portion of the analyte.

2. The device of claim 1, wherein the lancing device includes a cutting edge substantially aligned with said test strip.

3. The device of claim 1, wherein the lancing device is operatively coupled to said housing by a spring mechanism.

4. The device of claim 1, wherein the lancing device includes body having a first axis and a sharp mounted to the body, wherein the sharp has a second axis, said second axis being substantially perpendicular to said first axis.

5. The device of claim 1, wherein the lancing device includes a sharp, said sharp having a least two points, each configured for sampling the analyte.

6. The device of claim 1, wherein said lancing device is configured to draw the analyte through a test site of a patient by piercing the tissue thereof.

7. The device of claim 1, wherein said test strip is physically displaced relative to said housing to contact the analyte.

8. The device of claim 7, wherein a fill channel of said test strip is substantially aligned with the analyte.

9. The device of claim 1, wherein the result displayed on said display unit corresponds with a physiological property of the captured portion of the analyte.

10. The device of claim 9, wherein the physiological property of the captured portion of the analyte includes at least one of: a glucose level; a carbohydrate level; a hemoglobin level; and a glycated hemoglobin level.

11. The device of claim 1, further including a controller operatively coupled to said housing for controlling the operation of said lancing device.

12. The device of claim 1, further including a controller operatively coupled to said housing for controlling a movement of said test strip.

13. The device of claim 1, further including a controller operatively coupled to said housing for controlling the display on said display unit.

14. The device of claim 1, further including an input unit mounted to said housing for operating the lancing device.

15. A method for sampling and testing comprising:

placing an integrated sampling and testing device on a test site of a patient; and

performing a single operation of the device to sample an analyte from the test site, to perform analyte testing on the sample, and to display a result corresponding to the analyte testing.

16. The method of claim 15, wherein the performing a single operation includes depressing an input button.

17. The method of claim 15, wherein the analyte is sampled from the test site by displacing a test strip to contact the analyte.

18. The method of claim 15, wherein the analyte is sampled from the test site by piercing the test site with a lancing device, moving a test strip to the pierced test site to capture the analyte.

19. A method of integrating sampling and testing of an analyte comprising:

performing a single operation to sample an analyte, to capture said sampled analyte, to perform testing on said sampled analyte, and to display a result corresponding to the performed test.

20. The method of claim 19, wherein said analyte is blood.

* * * * *