US005569286A

# United States Patent [19]

**Peckham et al.**

[11] **Patent Number: 5,569,286**

[45] **Date of Patent: Oct. 29, 1996**

[54] **LANCET ASSEMBLY**

[75] Inventors: **Allison A. Peckham**, Pompton Plains, N.J.; **Lennox O. Watts**, Bronx; **Marina Gertsek**, Manhattan County, both of N.Y.; **Kevin R. Smith**, Holdrege, Nebr.; **Don D. Taubenheim**, Holdrege, Nebr.; **Ronald J. Pistulka**, Holdrege, Nebr.

[73] Assignee: **Becton Dickinson and Company**, Franklin Lakes, N.J.

[21] Appl. No.: **413,044**

[22] Filed: **Mar. 29, 1995**

[51] **Int. Cl.**[6] ..... **A61B 17/14**

[52] **U.S. Cl.** ..... **606/181**; 606/182; 606/185; 604/192; 604/198

[58] **Field of Search** ..... 606/181, 185, 606/182; 604/198, 192, 263; 30/340, 342

[56] **References Cited**

U.S. PATENT DOCUMENTS

| | | | |
|---|---|---|---|
| 4,580,564 | 4/1986 | Andersen | 606/181 |
| 5,324,303 | 6/1994 | Strong et al. | 606/181 |
| 5,385,571 | 1/1995 | Morita | 606/181 |
| 5,454,828 | 10/1995 | Schraga | 606/181 |

*Primary Examiner*—Michael Powell Buiz
*Assistant Examiner*—Kevin Truong
*Attorney, Agent, or Firm*—Alan W. Fiedler

[57] **ABSTRACT**

A lancet assembly includes an injection molded housing with a metal stylet mounted therein and a cap or shield. The stylet is held in position by adhesive and a plurality of supports that retain a centrally located hub within a lower portion of the housing. An improved cap is provided for mounting over the stylet on the lower portion of the housing to shield the stylet prior to use. The cap also includes an octagonal flange at its lower end to ease removal of the cap from the housing and to provide a flat octagonal surface for independent standing during reshielding. The housing of the lancet assembly includes a plurality of molded-in longitudinal splines that provide a textured surface on the exterior of the housing to make the housing easier to handle and manipulate when loading the lancet assembly into a blood sampling instrument and includes an annular flange extending from the exterior surface of the housing to make insertion/removal of shielded lancet assembly into/from a blood sampling instrument easier.

**13 Claims, 5 Drawing Sheets**

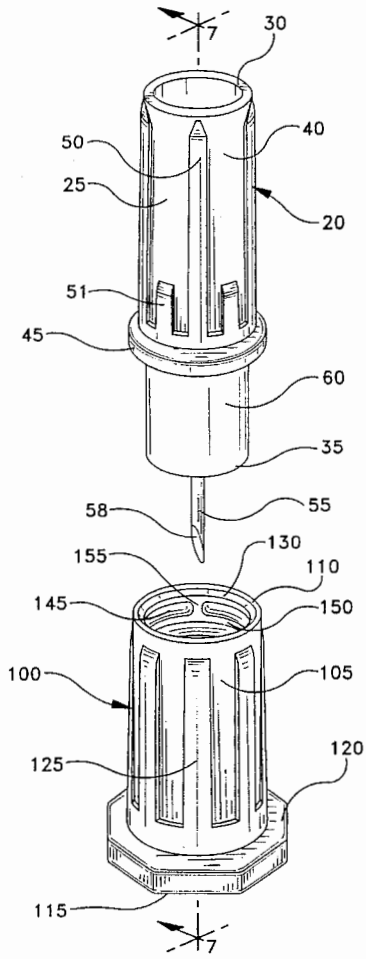

FIG-1

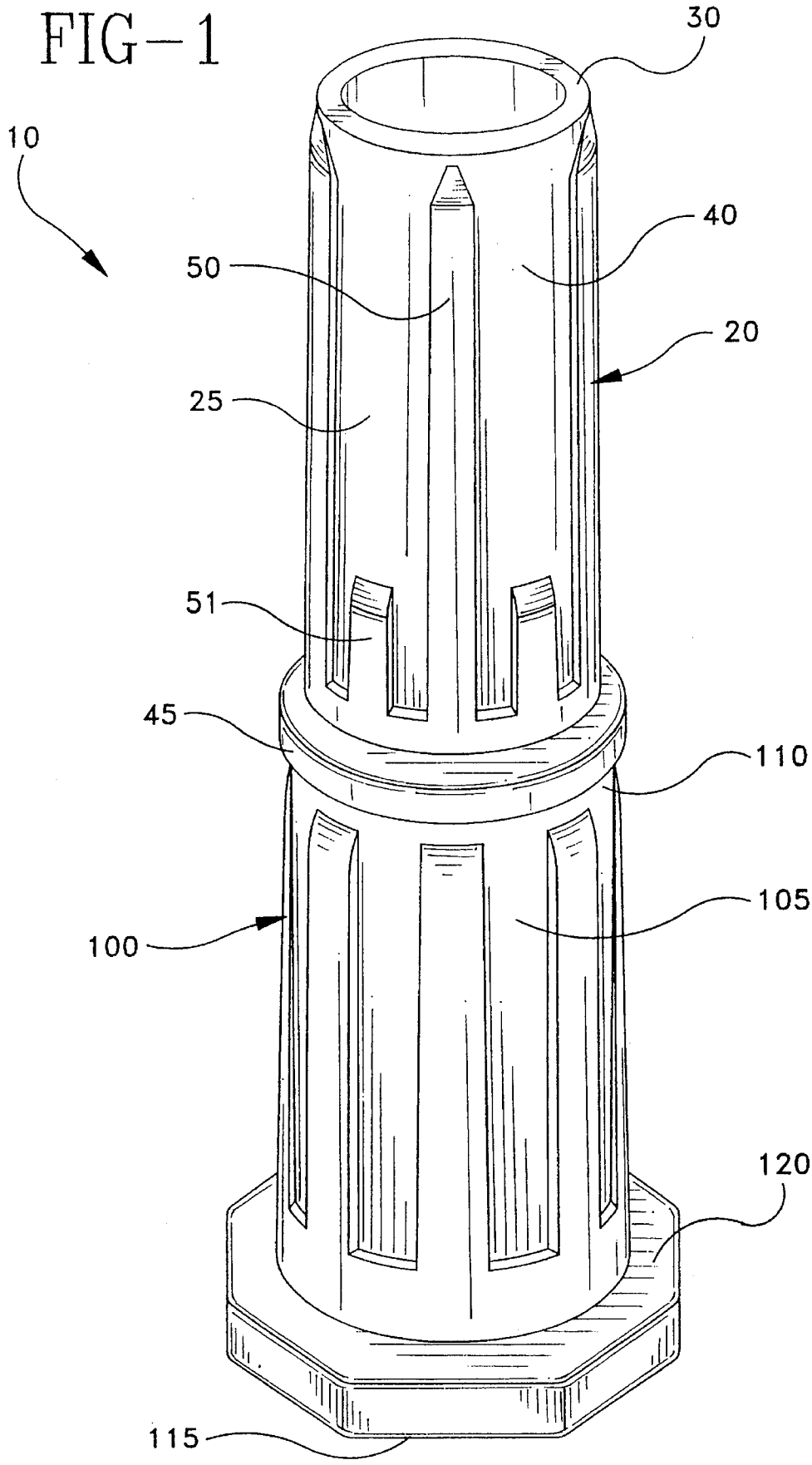

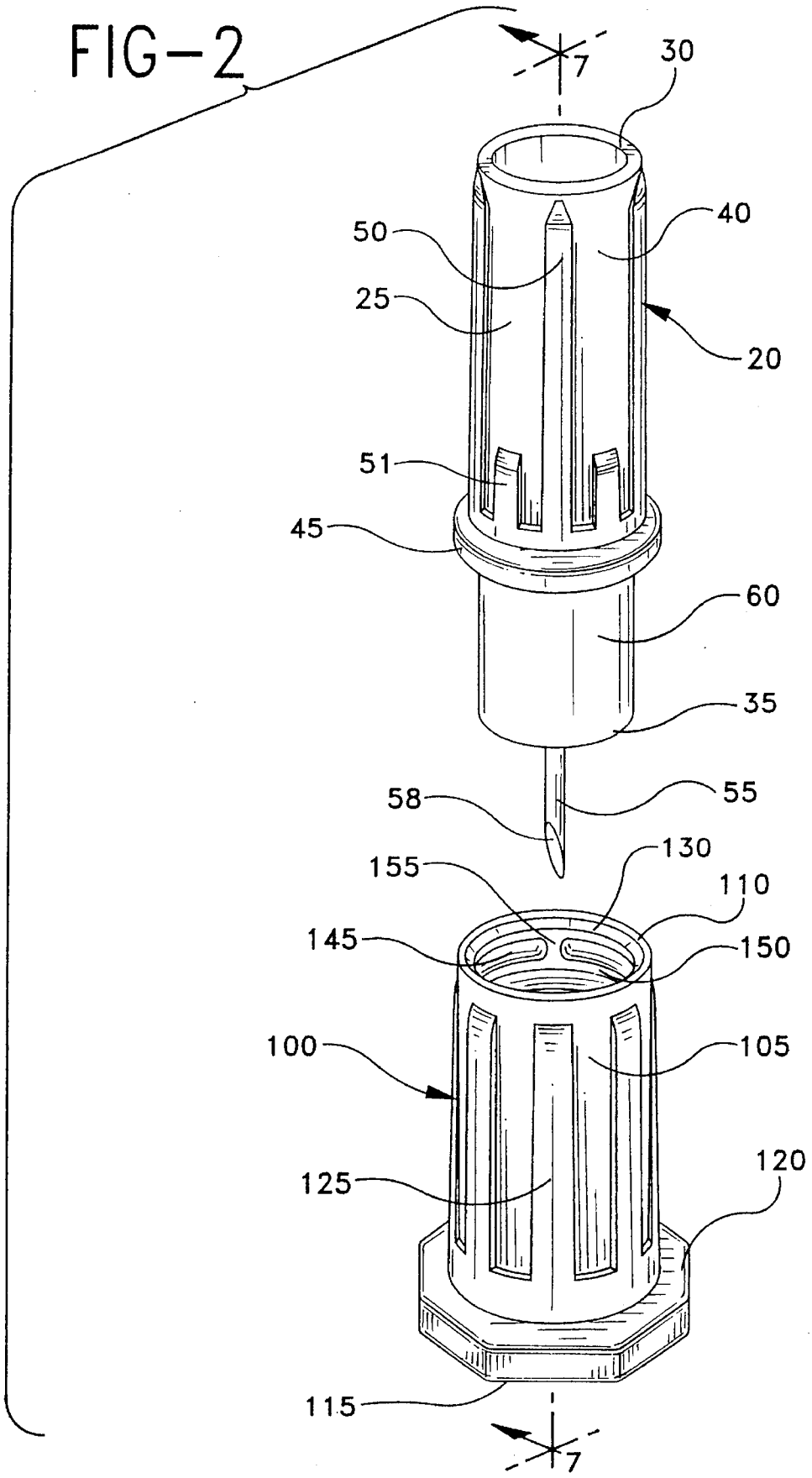
FIG-2
7
30
40
50
25
20
51
45
60
35
58
55
155
130
110
145
150
100
105
125
120
115
7

FIG-3

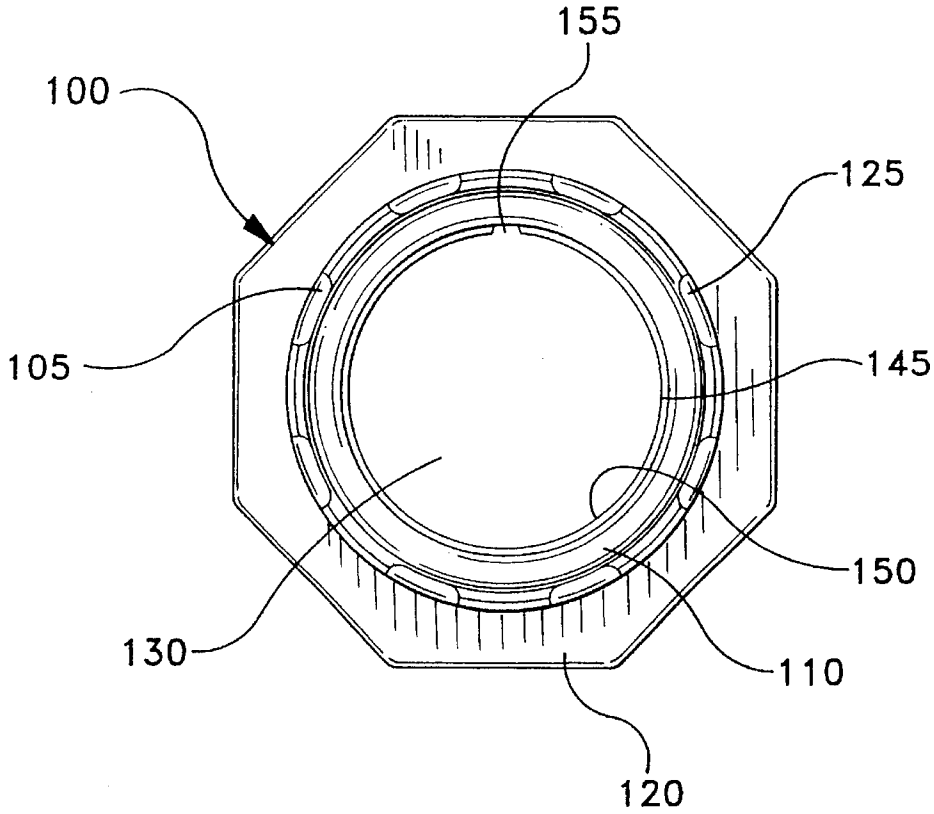


FIG-4

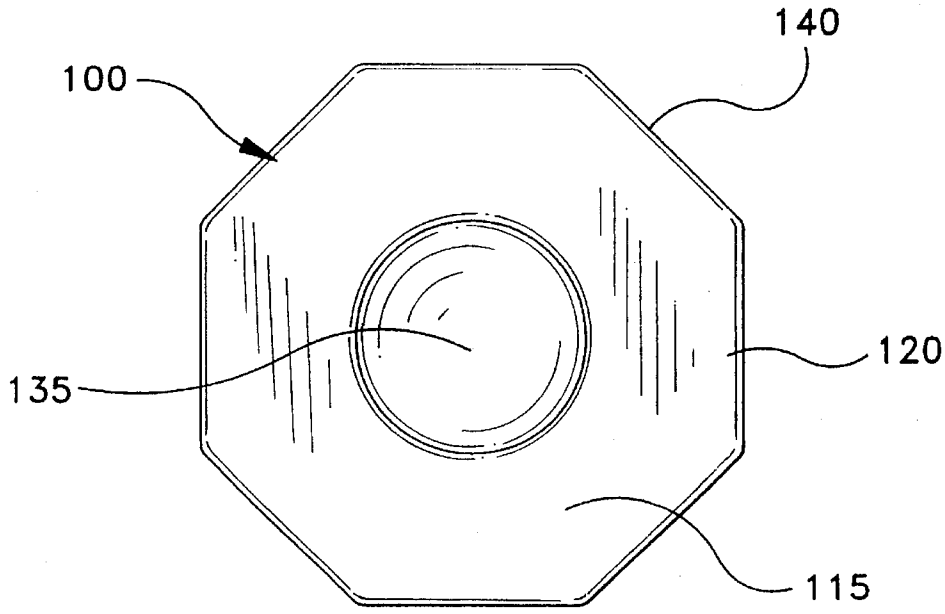

FIG-5

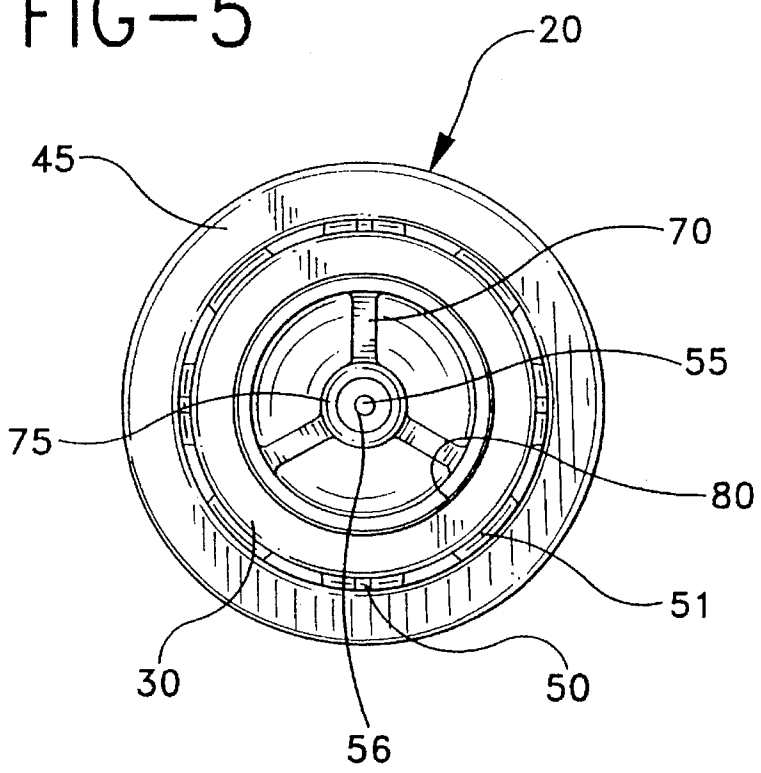


FIG-6

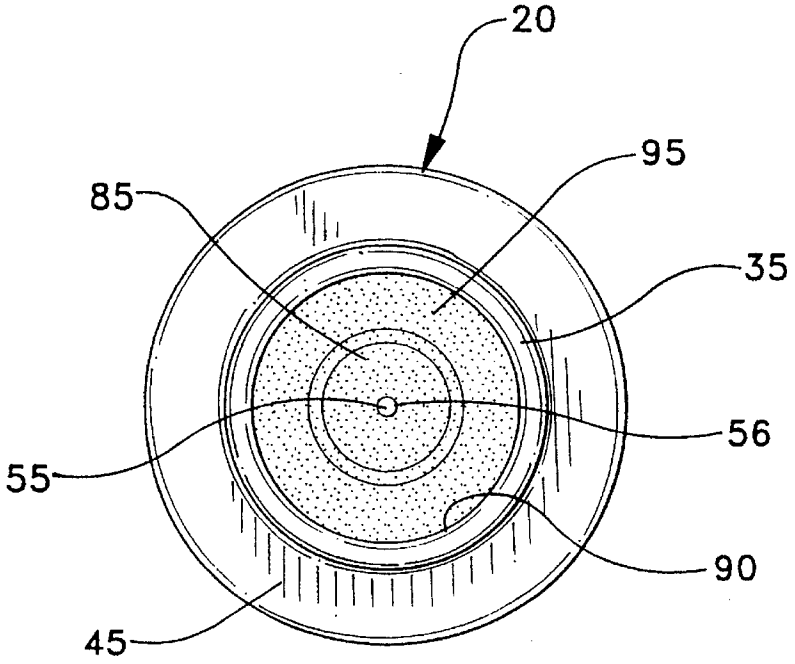

FIG-7

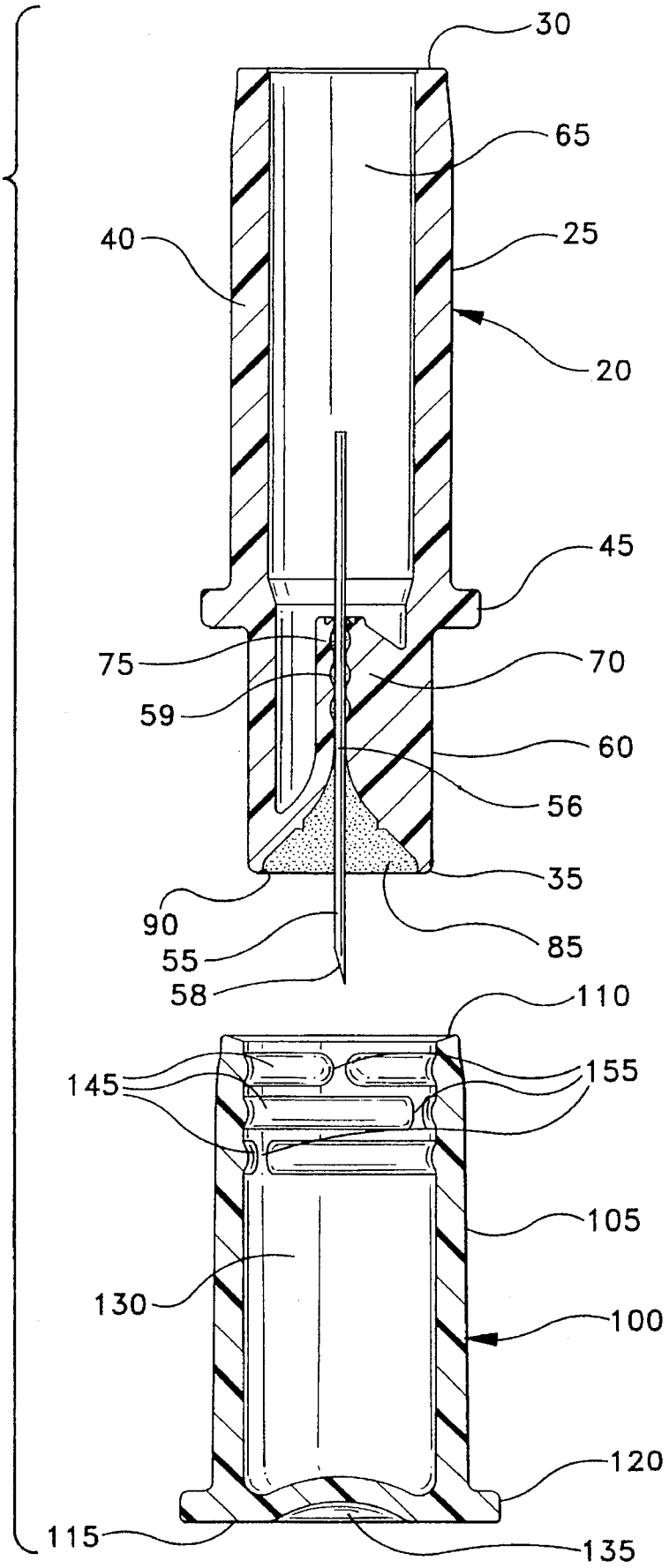
30
65
40
25
20
45
75
70
59
60
56
35
90
85
55
58
110
145
155
105
130
100
120
115
135

# LANCET ASSEMBLY

## BACKGROUND OF THE INVENTION

1. Field of the Invention

The present invention relates to a lancet assembly and, more particularly, to a lancet assembly having an injection molded housing with a metal stylet mounted therein and an injection molded removable cap or shield over the housing to protect the stylet.

2. Background Description

A lancet is a device commonly used in hospitals, doctors offices and homes to pierce a patient's flesh to draw capillary blood for diagnostic testing. Conventional lancets consist of a shank portion having at a distal end a blade or spike, which is sharp and adapted to pierce the patient's skin so to sever capillaries and provide blood for testing. Since the blade or spike is sharp, some lancets are provided with a removable shield for protectively covering the sharp edge or point of the lancet's blade or spike when not in use to protect the patient and users from inadvertent skin puncture.

There are a number of conventional lancet instruments available to aid a user in puncturing or penetrating a patient's skin to draw and sample a small outflow of blood. For example, U.S. Pat. No. 4,577,630 (Nitzsche et al), which is assigned to Becton, Dickinson and Company, shows a disposable lancet assembly for use in a reusable breach loading target pressure activated lancet firing device. The lancet assembly includes a rectangular handle portion, a lancet point extending outwardly from a distal end of the handle portion, and a removable shield adapted to mate with the lancet point when the lancet assembly is not in use to protect users from accidental puncture.

U.S. Pat. No. 4,517,978 (Levin et al.) shows another type of blood sampling instrument for drawing a blood sample from a patient's finger. The instrument described in Levin et al. includes a reusable tubular housing having a spring chamber for driving a needle held in a disposable needle holder into a patient's finger, when a trigger button on the side of the tubular housing is depressed. Prior to use, a disposable needle holder is slidably mounted in a socket within the tubular housing on a plunger member and the plunger member is slid to an armed position. The armed instrument is then placed against a patient's finger and activated using the trigger button. When activated the instrument drives the plunger towards the distal end of the instrument which causes the needle in the disposable needle holder on the plunger to pierce the patient's skin and create a drop of blood sufficient for testing.

As suggested by Levin et al., in Col. 2, lines 17–19, there are conventional disposable needle holders available on the market for use with the Levin et al. instrument, e.g., a MONOLET™ lancet assembly. However, conventional lancet assemblies are difficult to handle and manipulate when loading the instrument and have shields mounted directly on their needles that are difficult to remove from the needle and may cause damage to the needle when being removed. In addition, conventional needle holders are manufactured using insert molding, which is expensive and makes it difficult to inspect the assembly/needle and precisely place the needle within the needle holder to control penetration depth.

## SUMMARY OF THE INVENTION

The present invention overcomes the problems identified in the background material by providing a disposable lancet



assembly for use in a blood sampling instrument having an injection molded housing with a metal stylet, e.g., 28 gauge, mounted therein and an improved cap or shield with a flange for ease of removal.

The injection linear molded housing is circular in diameter and includes a circular, full circumference flange extending therefrom. Molded-in longitudinal splines form a surface on the exterior of the housing to make the housing easier to handle and manipulate when loading the lancet assembly into a blood sampling instrument. In addition, the housing is injection molded which makes it easier to inspect the stylet and permits the stylet to be precisely located and mounted within the housing with adhesive such that a predetermined length of the stylet protrudes from the distal end.

The improved cap or shield receives and mounts on the distal end of the housing and includes three labyrinth rings that form a labyrinth seal with the housing. The cap also includes an octagonal flange to ease removal of the cap from the housing prior to use and provide stability of the assembled lancet assembly when placed on a flat surface. The cap can also be placed on its flange end to allow re-shielding of the lancet assembly without holding the cap. In addition, the housing and cap are hollow to reduce the materials needed during manufacturing, improve manufacturability and reduce cost.

These and other aspects, features and advantages of the present invention will become apparent from the following detailed description taken in conjunction with the accompanying drawings.

## DESCRIPTION OF THE DRAWINGS

FIG. **1** is a perspective view of a shielded lancet assembly according to the present invention;

FIG. **2** is a perspective view of an unshielded lancet assembly according to the present invention;

FIG. **3** is a top plan view of the cap shown in FIG. **2**;

FIG. **4** is a bottom plan view of the cap shown in FIGS. **2** and **3**;

FIG. **5** is a top plan view of the lancet assembly shown in FIG. **2**;

FIG. **6** is a bottom plan view of the lancet assembly shown in FIGS. **2** and **5**; and

FIG. **7** is a cross-sectional view of the lancet assembly shown in FIG. **2**, along line **7**—**7**.

## DETAILED DESCRIPTION

FIG. **1** is a perspective view of a shielded lancet assembly **10** according to the present invention for use in a blood sampling instrument similar to the one shown and described in U.S. Pat. No. 4.5 17,978 (Levin et al.), included herein by reference. Shielded lancet assembly **10** includes a lancet assembly **20** with a removable cap or shield **100** attached thereto to shield and protect a user from a stylet **55**, shown in FIG. **2**, in lancet assembly **20**.

Lancet assembly **20** includes a cylindrical housing **25** having a proximal top end **30** and a distal botton end **35**, shown in FIG. **2**, connected by an outer wall **40**. An annular flange **45** extends from outer wall **40** and surrounds housing **25**. A plurality of longitudinal ribs or splines **50** and **51** on outer wall **40** extend frown flange **45** towards proximal end **30**. Ribs **50** are longer than ribs **51** and alternate around outer wall **40** to provide a novel textured surface to improve

handling, maneuverability and fit when lancet assembly **20** is mounted in a socket on the blood sampling instrument.

Removable cap **100** includes a cylindrical housing **105** having an open top end **110** and a closed bottom end **115**. As shown in FIG. **2**, distal bottom end **35** of lancet assembly **20** is received in open top end **110** of cap **100** to cover and shield stylet **55** mounted in distal end **35** of lancet assembly **20**. Closed bottom end **115** on cap **100** includes an octagonal shaped flange **120** extending radially therefrom that improves the removability of cap **100** from lancet assembly **20** and handling of cap **100**. Removable cap **100** also includes a plurality of longitudinal ribs or splines **125** on housing **105** that extend from octagonal shaped flange **120** toward open end **110**. Ribs **125** provide a sufficient textured surface to improve handling and maneuverability of cap **100**, when it is being removed from lancet assembly **20**.

When lancet assembly **20** is used in the conventional Levin et al. blood sampling instrument, a shielded lancet assembly **10** is inserted in the socket in the distal end of the Levin et al. instrument. Cap **100** is then removed frown lancet assembly **20** using octagonal shaped flange **120** to unshield stylet **55**.

FIG. **2** is an exploded perspective view of an unshielded lancet assembly according to the present invention. A user removes cap **100** from distal bottom end **35** of lancet assembly **20** by applying a longitudinal force to octagonal shaped flange **120** sufficient to slide a lower annular portion **60** at the base of stylet **55** out of a chamber **130** in open top end **110** of cap **100**. After the user has removed cap **100** from lancet assembly **20**, the user positions the distal end of the Levin et al. instrument on the patient's finger and depresses the trigger button on the instrument. When the trigger button on the instrument is depressed, a spring chamber in the instrument drives stylet **55** into the patient's finger. FIG. **2** also shows a plurality of labyrinth rings **145** within cap **100**, discussed below, and a sharpened point **58** on stylet **55**. Preferably, stylet **55** is made of 28 gauge stainless steel. Conventional lancet stylets use larger gauge material. In addition, stylet **55** can be lubricated to reduce penetration force and thereby reduce pain to the patient during use. Of course, the above material and gauge are merely exemplary, other gauge materials could also be used in the present invention.

FIG. **3** is a top plan view of cap or shield **100**, shown in FIG. **2**. As shown, cap **100** includes chamber **130** at its center surrounded by cylindrical housing **105**. Three labyrinth rings **145**, each provided with a gap **155** separated from ring to ring by 120 degrees, are provided around an interior wall **150** in housing **105** to provide sterility and a labyrinth seal between rings **145** and housing **25** when attached to lancet assembly **20**. The interference fit between rings **145** and housing **25** also determine the removal force necessary to remove cap **100** frown lancet assembly **20**. FIG. **3** also more clearly shows the positioning of ribs **125** around the circumference of housing **105** and the octagonal shape of flange **120**. FIG. **4** is a bottom plan view of cap **100** and shows a concave circular center portion **135** in closed botton end **115**. It should be appreciated that the octagonal shape of flange **120** provides a plurality of surfaces **140** that permit a user to more easily grasp cap **100** when removing it from lancet assembly **20**. Octagonal shaped flange **120** also provides a flat resting surface to cause cap **100** to stand upright with open top end **110** up, thereby allowing for reshielding of lancet assembly **20** after use without the user holding cap **100**.

FIG. **5** is a top plan view of lancet assembly **20** that more clearly shows a proximal end of stylet **55** mounted in passageway **56** and surrounded by a hub **75**. Preferably, hub **75** is supported by a plurality of longitudinal supports **70** extending radially frown hub **75**. Each support **70** is separated from each other by 120 degrees and is attached to an inner wall **80** to securely hold and longitudinally position stylet **55** in lancet assembly **20**. Stylet **55** is bonded in passageway **56** such that it extends from distal end **35** by a predetermined distance. FIG. **6** is a bottom plan view of lancet assembly **20** that more clearly shows an adhesive **85** surrounding stylet **55** in a reservoir **95** surrounded by an annular raised portion **90** for directing adhesive into passageway **56** when mounting stylet **55**. Preferably, adhesive **85** is a ultraviolet (UV) cured adhesive, but other types of adhesive may be used with the present invention.

FIG. **7** is a cross-sectional view of lancet assembly **20** shown in FIG. **2**, along line **7**—**7**. As shown in FIG. **7**, an upper chamber **65** extends from proximal top end **30** to a position level with flange **45** and just short of the entrance to passageway **56**. Preferably, passageway **56** is shaped to receive stylet **55** and includes a wavy surface **59** to provide an enhanced surface for bonding stylet **55** in passageway **56**. In addition, passageway **56** has an overall length sufficient to provide a straight stylet that is parallel to the longitudinal axis of housing **25**. When cured, the adhesive forms a mechanical bond to the plastic passageway **56** and a chemical bond to the stainless steel stylet **55** having holding power greater than the force required to pierce a patient's skin when drawing a blood sample. FIG. **7** also more clearly shows the shape of supports **70** within lower annular portion **60** and labyrinth rings **145** within cap **100**, each ring having gap **155** therein. The gap in each adjacent ring is preferably separated by 120 degrees to provide a labyrinth seal around stylet **55** when cap **100** is attached to lancet assembly **20**.

As for manufacturing the lancet assemblies, housing **25** and cap **100** are injection molded from polypropylene and polyethylene, respectively. Applicants have found that using different materials in each part improves fit between the pans and makes it much easier to attach and remove cap **100** from housing **25**. However, of course, these manufacturing techniques and materials are merely exemplary, various other manufacturing methods and materials could also be used.

In the foregoing discussion, it is to be understood that the above-described embodiments are simply illustrative of an improved lancet assembly, in accordance with the present invention. Other suitable variations and modifications could be made these embodiments and still remain within the scope of the present invention.

What is claimed is:

**1**. A lancet assembly comprising:

an annular housing having a proximal end and a distal bottom end connected by an outer wall with a passageway contained therein and a lower annular portion at said distal bottom end surrounding said passageway;

a stylet mounted in said passageway and extending a predetermined distance from said distal bottom end of said annular housing; and

a cap for receiving said distal bottom end of said annular housing to shield said stylet when not in use,

wherein said lower annular portion comprises a hub surrounding said passageway for holding and positioning said stylet in said annular housing and a plurality of supports extending radially from said hub to said outer wall to support said hub within said annular housing.

**2**. A lancet assembly according to claim **1**, wherein said lower annular portion comprises a reservoir surrounding said passageway for directing liquid adhesive into said passageway after mounting said stylet in said passageway.

3. A lancet assembly according to claim 2, wherein said passageway includes an internal surface that directs the flow of liquid adhesive into said passageway from said reservoir when said stylet is being mounted in said passageway.

4. A lancet assembly according to claim 1, wherein each of said plurality of supports are separated by approximately 120 degrees.

5. A lancet assembly according to claim 1, wherein said annular housing is made of polypropylene and said cap is made of polyethylene to improve the fit between said annular housing and said cap and separation of said cap from said annular housing.

6. A lancet assembly according to claim 1, wherein said annular housing further comprises an annular flange to aid a user in removing said cap from said lancet assembly prior to use and in removing said lancet assembly from a blood sampling instrument after use.

7. A lancet assembly according to claim 6, wherein said cap includes a flange having an octagonal shape for positive grip and stability on a flat surface.

8. A lancet assembly according to claim 1, wherein said passageway includes an internal surface that directs the flow of liquid adhesive in said passageway when said stylet is being mounted in said passageway.

9. A lancet assembly according to claim 1, wherein said cap comprises:

a cylindrical housing having an open top end and a closed bottom end, said annular housing being received in said open top end when said lancet assembly is shielded; and

a flange extending radially from said closed bottom end to aid a user in removing said cap from said annular housing and re-shielding said lancet assembly after use without holding said cap.

10. A lancet assembly according to claim 1, wherein said stylet is made of approximately 28 gauge stainless steel.

11. A lancet assembly comprising:

an annular housing having a proximal end and a distal bottom end connected by an outer wall with a passageway contained therein;

a stylet mounted in said passageway and extending a predetermined distance from said distal bottom end of said annular housing; and

a cap for receiving said distal bottom end of said annular housing to shield said stylet when not in use, wherein said cap comprises:

a cylindrical housing having an open top end and a closed bottom end connected by an internal surface, said annular housing of said lancet assembly being received in said open top end when shielded; and

a plurality of labyrinth rings extending from said internal surface of said cap that provide a labyrinth seal between said annular housing and said rings when said lancet assembly is shielded, wherein each labyrinth ring includes a gap offset from the other gaps.

12. A lancet assembly according to claim 11, wherein the offset between gaps in adjacent rings is approximately 120 degrees.

13. A lancet assembly according to claim 10, wherein said stylet is lubricated to reduce insertion force during use.

* * * * *

## Disclaimer

5,569,286 - Allison A. Peckham, Pompton Plains, N.J.; Lennox O. Watts, Bronx; Marina Gertsek, Manhattan County, both of N.Y.; Kevin R. Smith, Holdrege, Nebraska; Don D. Taubenhaim, Holdrege, Nebraska; Ronald J. Pistulka, Holdrege, Nebraska. LANCET ASSEMBLY. Patent dated Oct. 29, 1996. Disclaimer filed Sept. 8, 1999, by the assignee, Becton Dickinson and Company.

Hereby enters this disclaimer to claim 1 of said patent.

(*Official Gazette,* December 28, 1999)