US 20060241669A1

(19) United States

(12) Patent Application Publication

(10) Pub. No.: US 2006/0241669 A1

(43) Pub. Date: Oct. 26, 2006

Stout et al.

(54) NARROW-PROFILE LANCING DEVICE

(76) Inventors: **Jeffrey T. Stout**, Smyrna, GA (US); **Avi M. Robbins**, Marietta, GA (US); **David R. Buenger**, Roswell, GA (US)

Correspondence Address:
GARDNER GROFF SANTOS & GREENWALD, P.C.
2018 POWERS FERRY ROAD
SUITE 800
ATLANTA, GA 30339 (US)

(21) Appl. No.: **11/397,058**

(22) Filed: **Apr. 4, 2006**

Related U.S. Application Data

(60) Provisional application No. 60/667,958, filed on Apr. 4, 2005.

Publication Classification

(51) **Int. Cl.**
A61B 17/32 (2006.01)

(52) **U.S. Cl.** **606/182**; 606/181

(57) **ABSTRACT**

A lancing device having a substantially narrow profile housing, optionally configured for attachment in place of a battery cover of a blood-glucose testing meter. A miniature lancet has an oversized sterility cap with a T-shaped end for ease of handling and loading into a lancing device. A flattened portion of the sterility cap is angularly offset, for example generally perpendicular to, a flattened portion of the lancet body, such that twisting the sterility cap into alignment with the lancet body serves to detach the sterility cap from the lancet body.

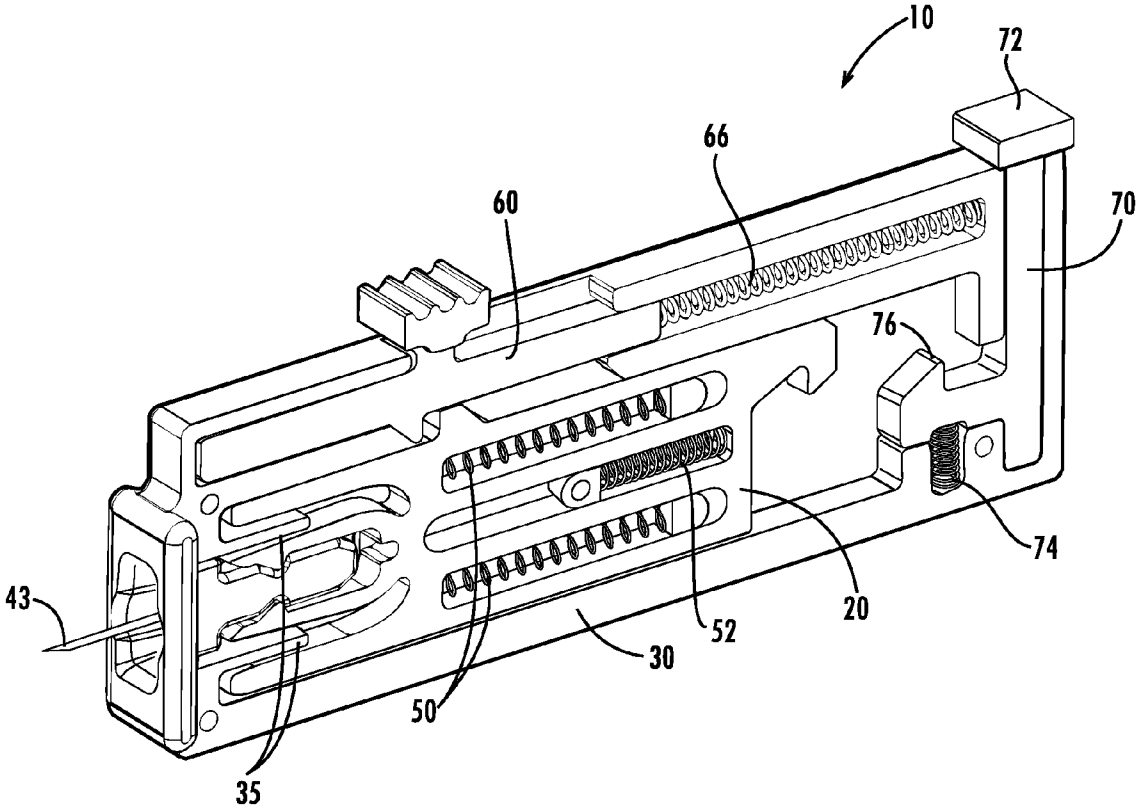

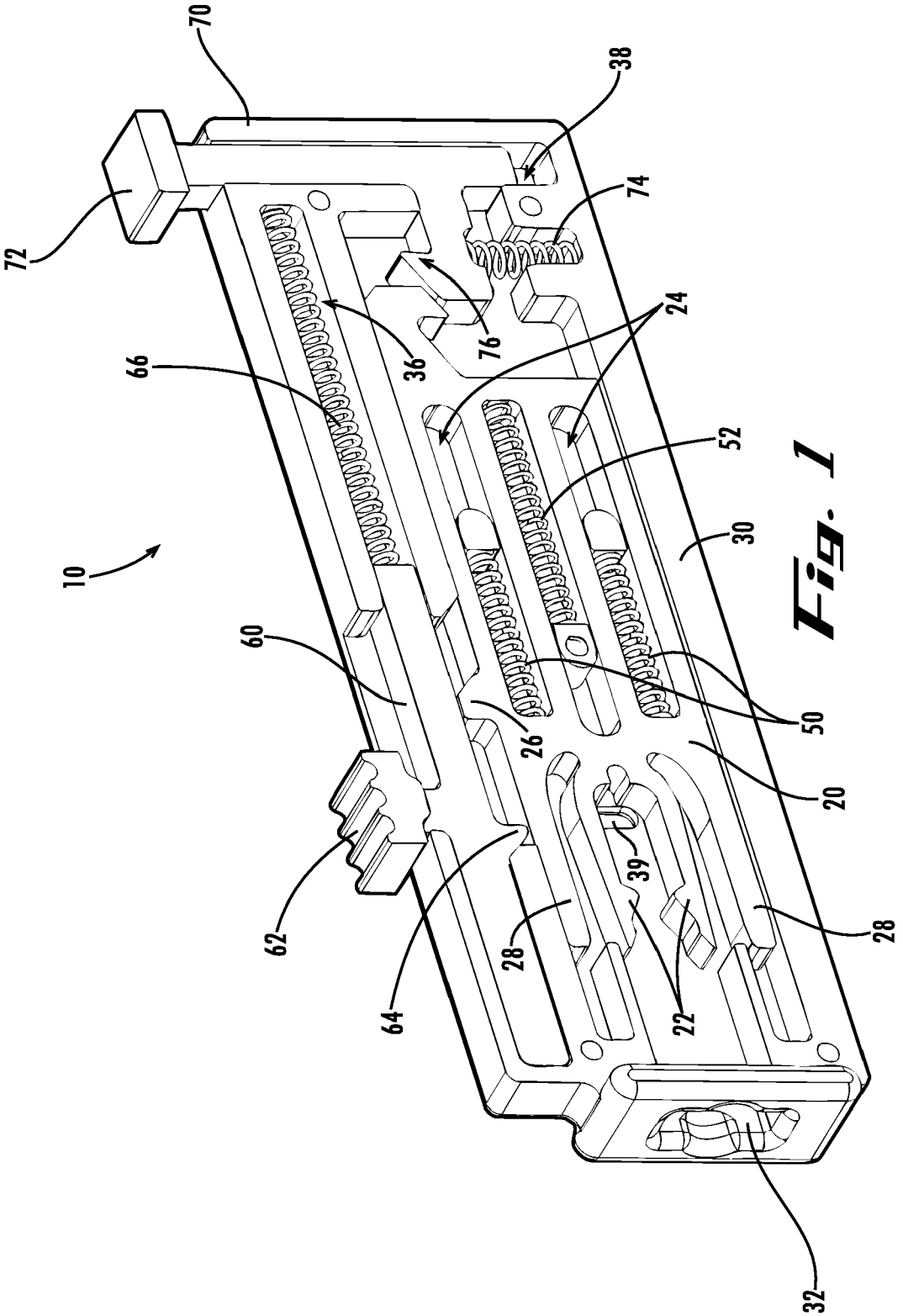

Fig. 1

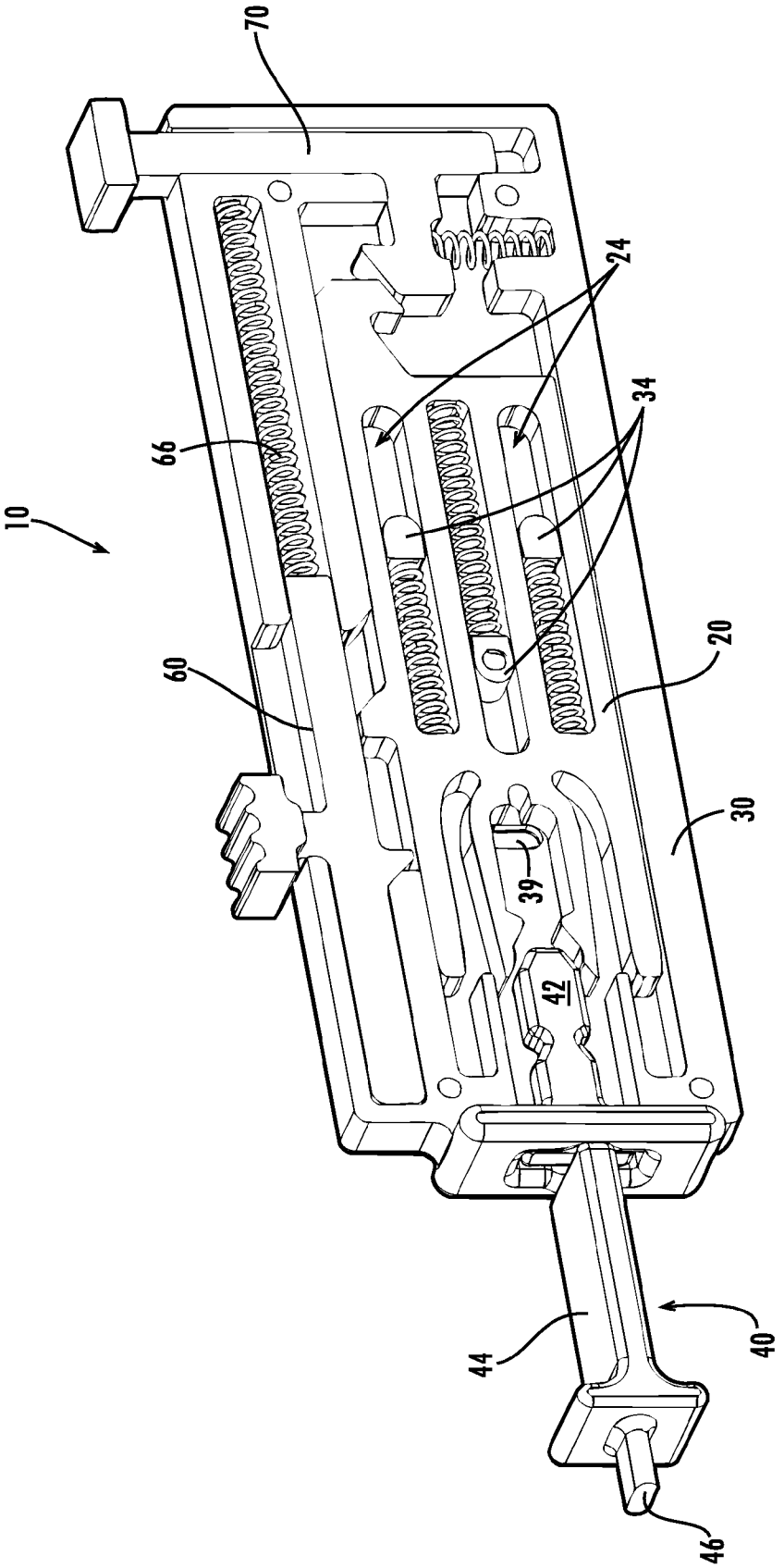

Fig. 7

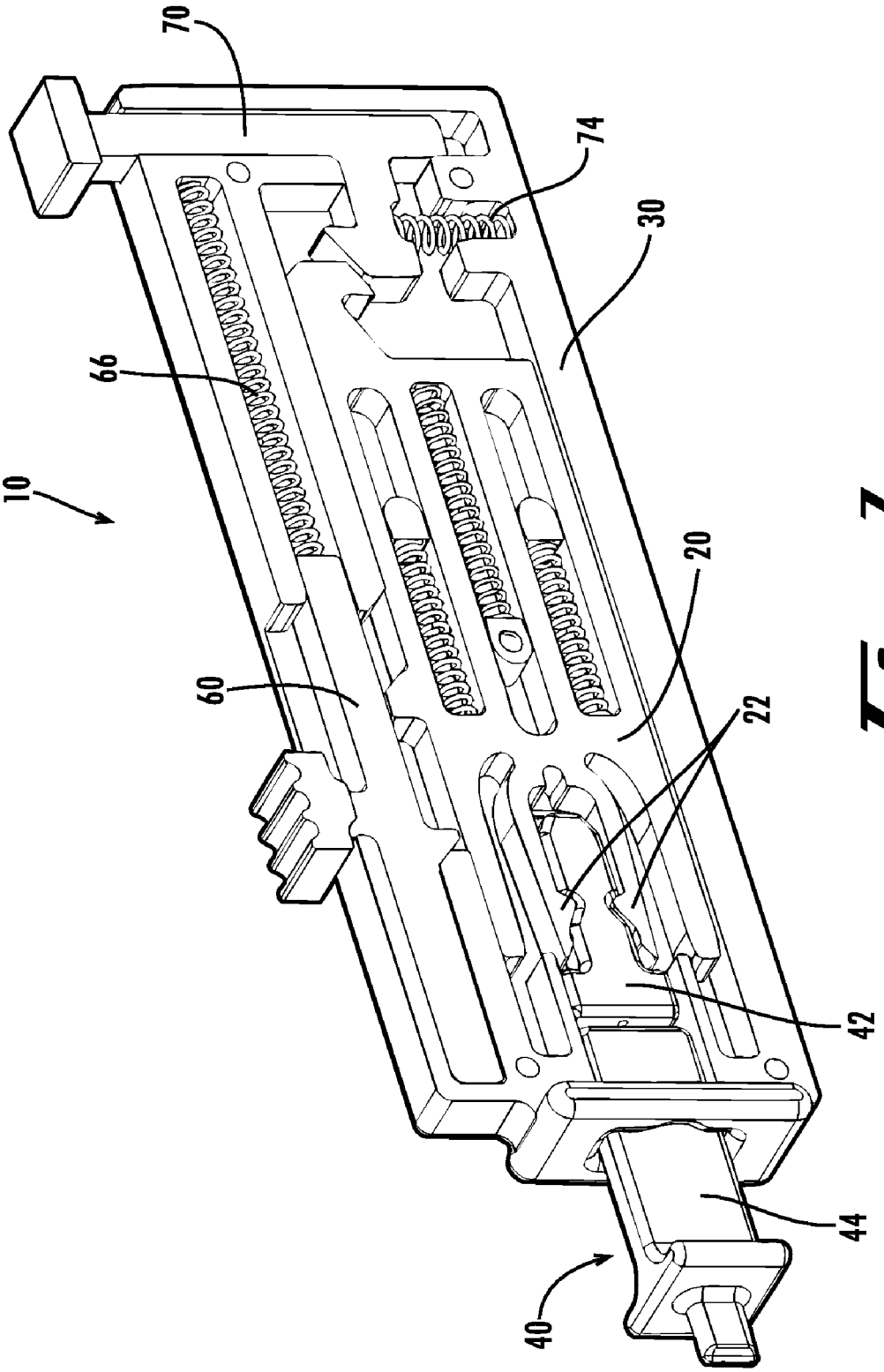

Fig. 7

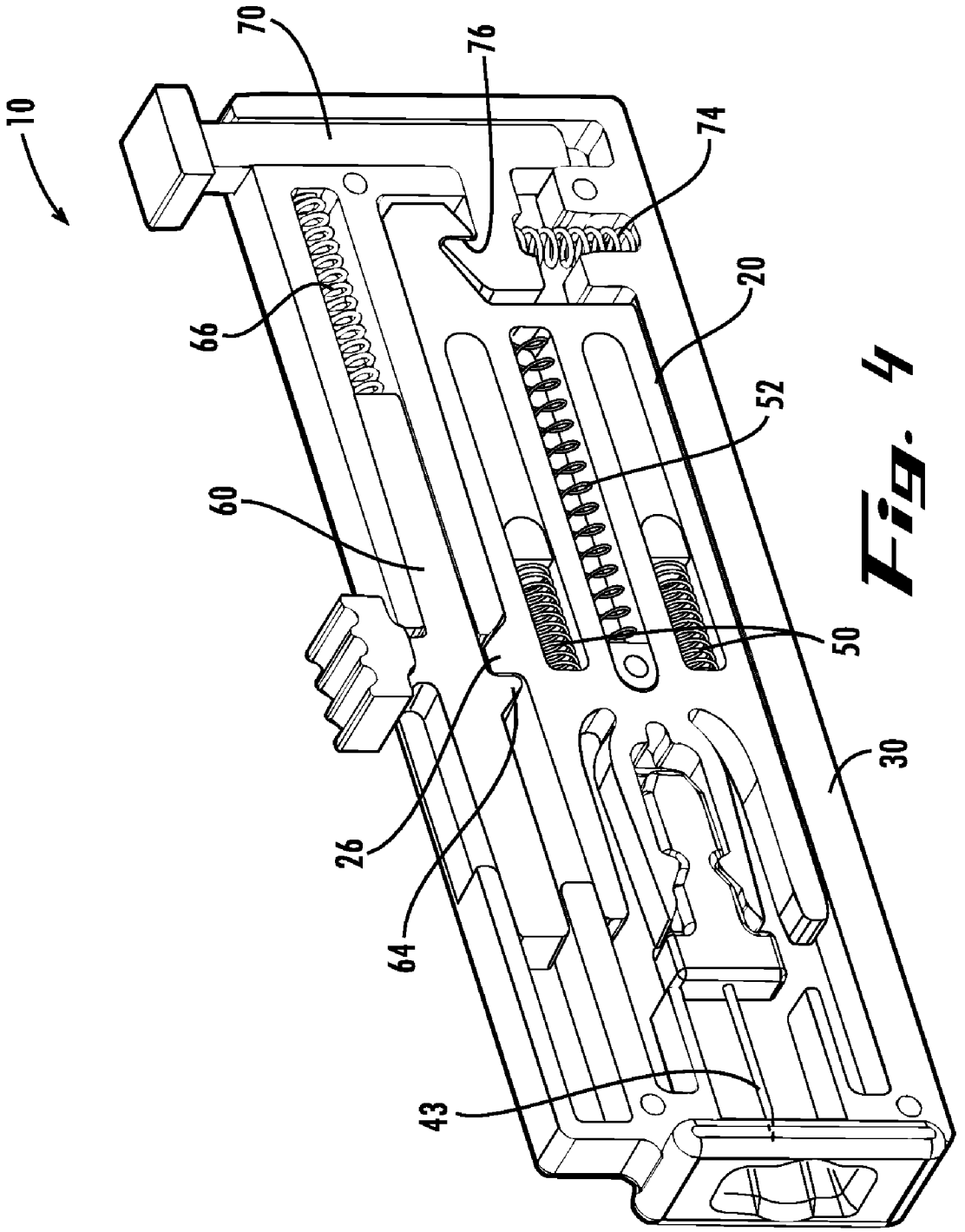

Fig. 4

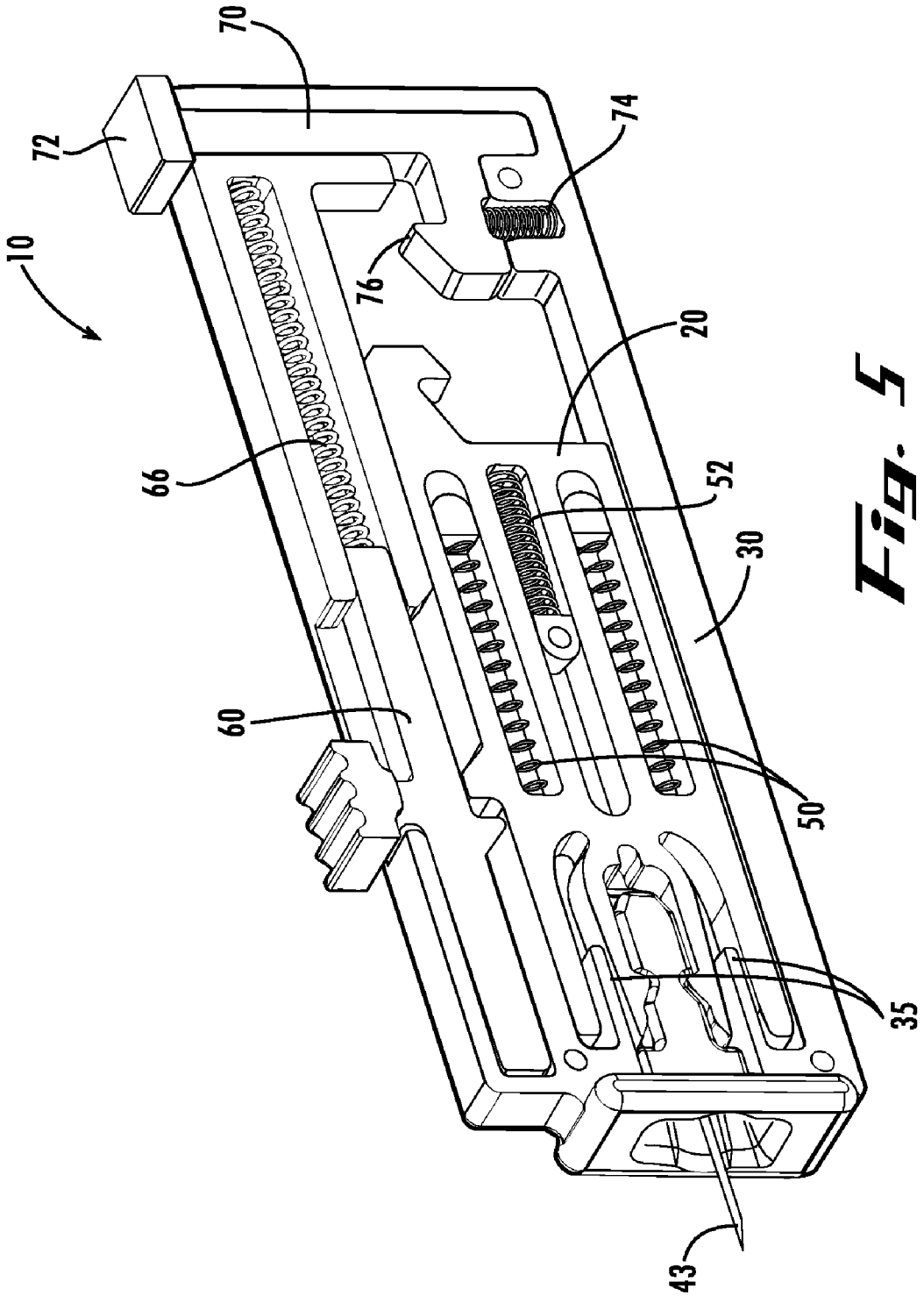

Fig. 5

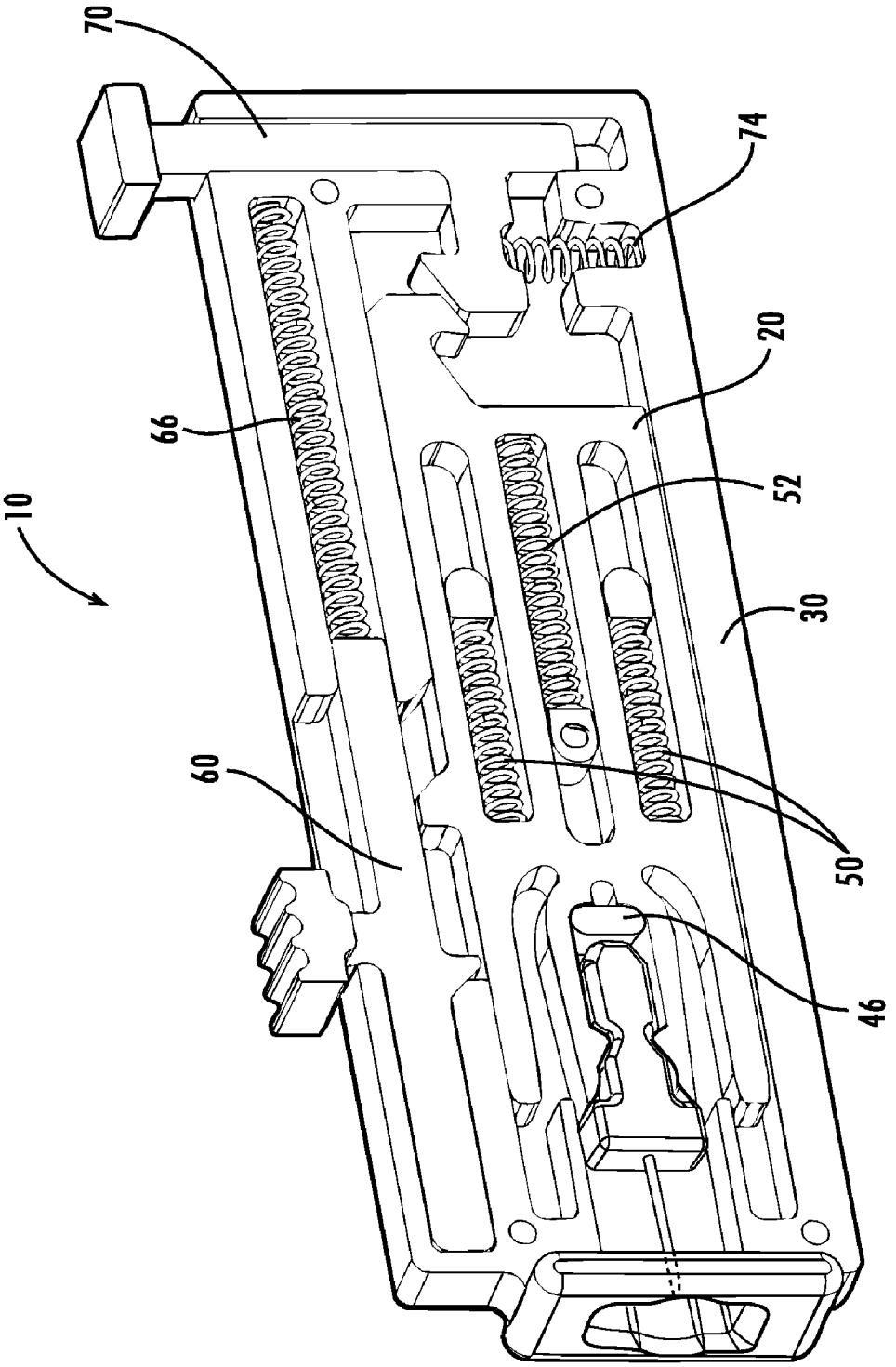

Fig. 6

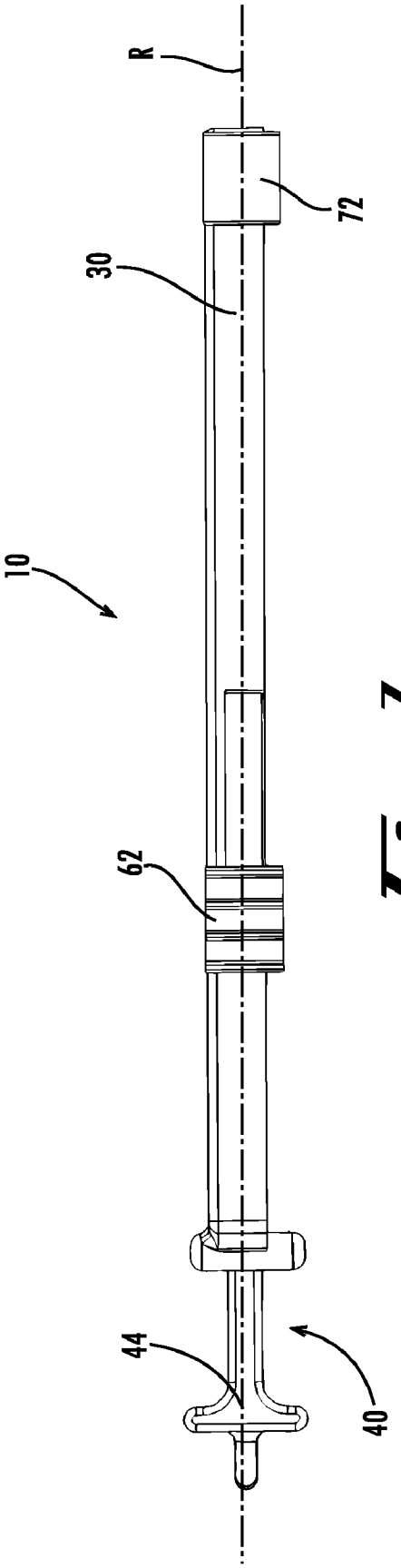

Fig. 7

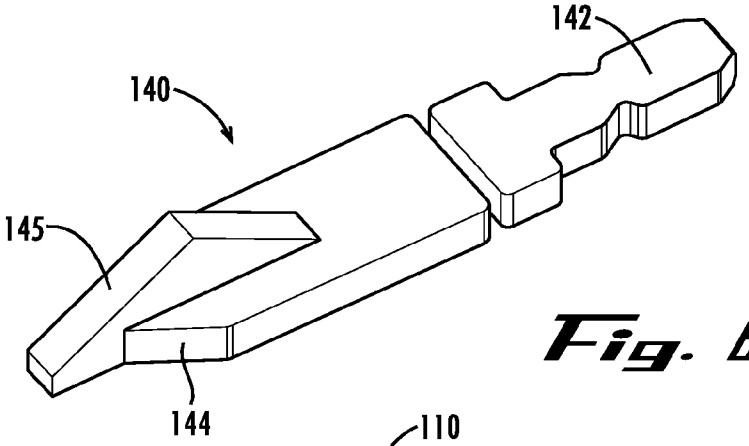

Fig. 8a

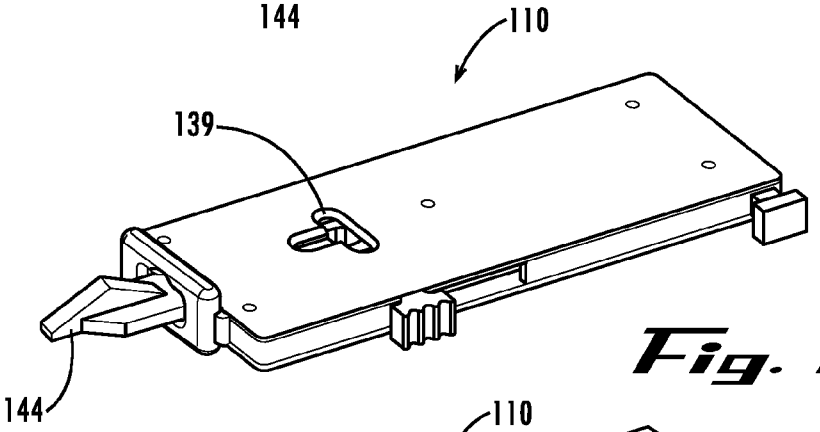

Fig. 8b

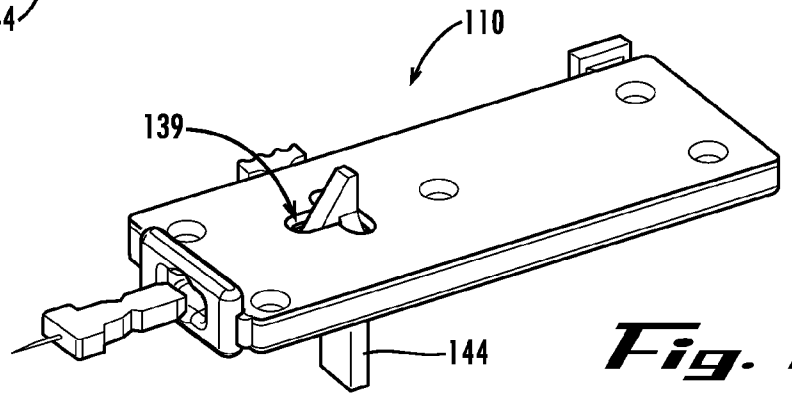

Fig. 8c

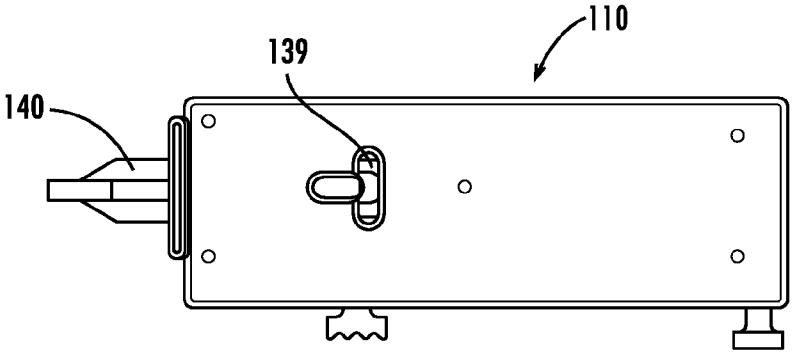

Fig. 8d

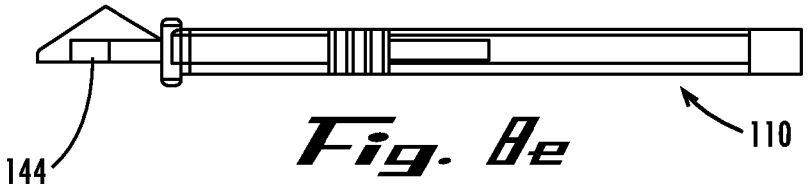

Fig. 8e

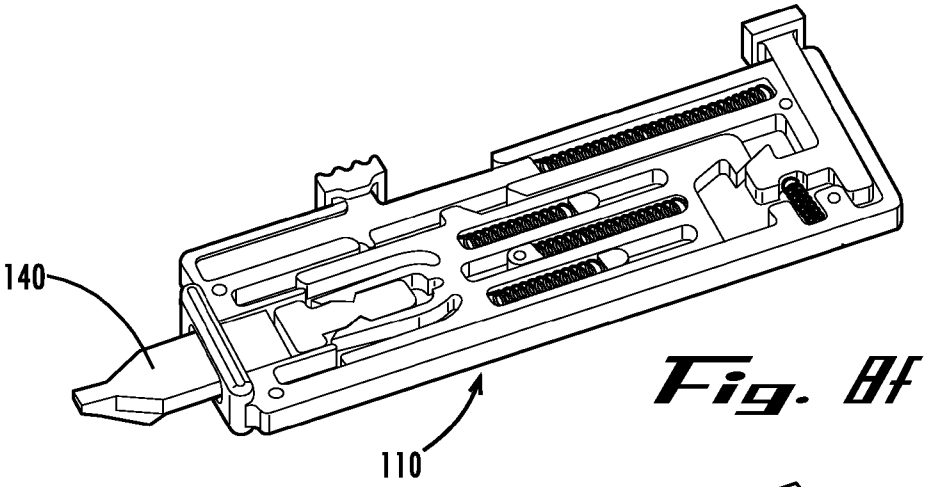

Fig. 8f

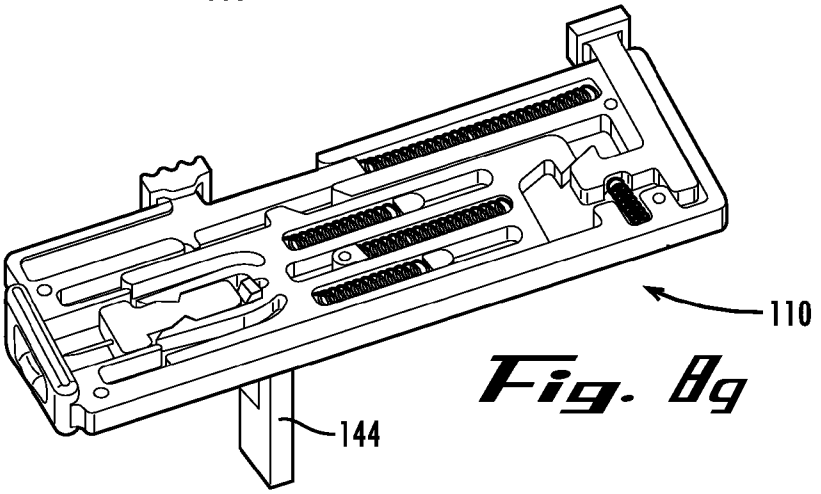

Fig. 8g

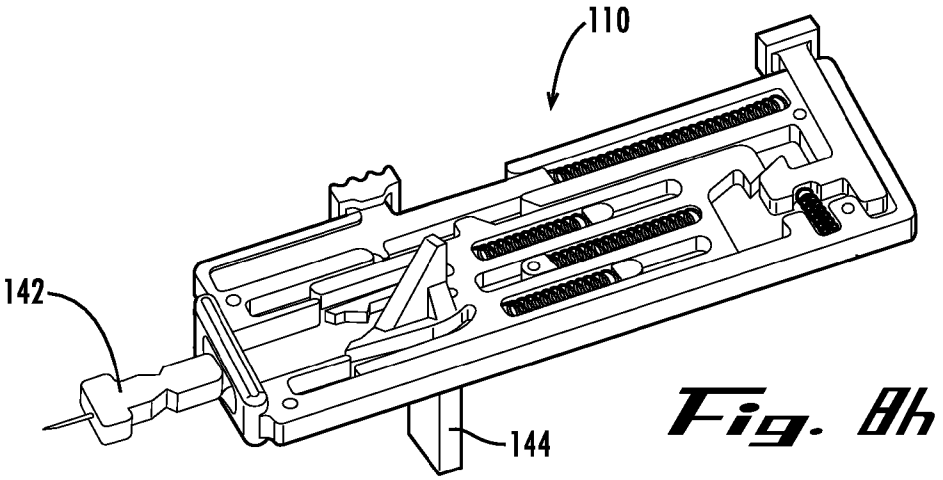

Fig. 8h

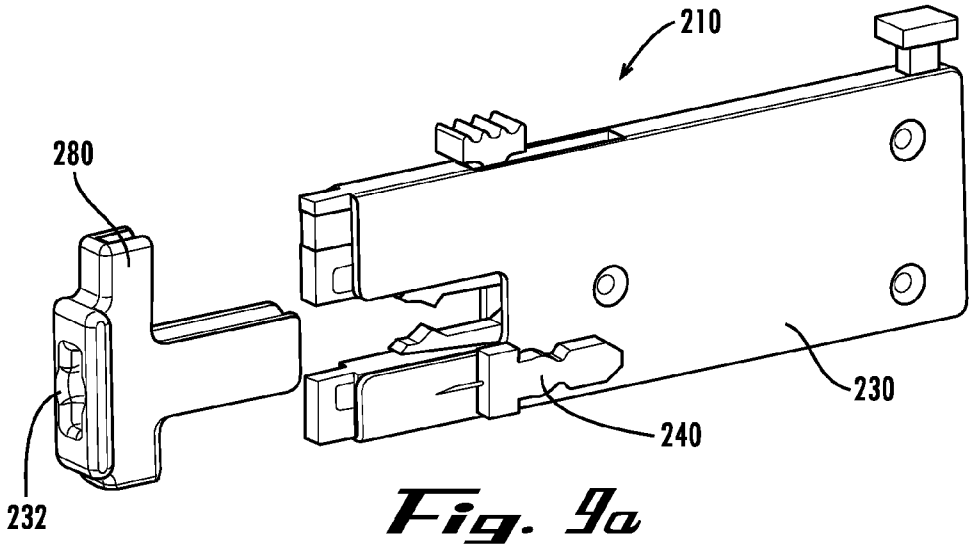

Fig. 9a

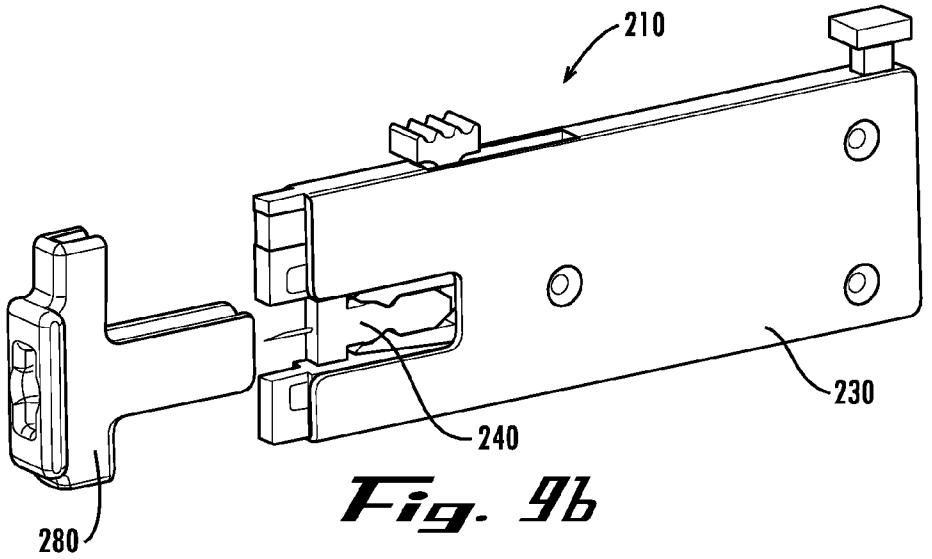

Fig. 9b

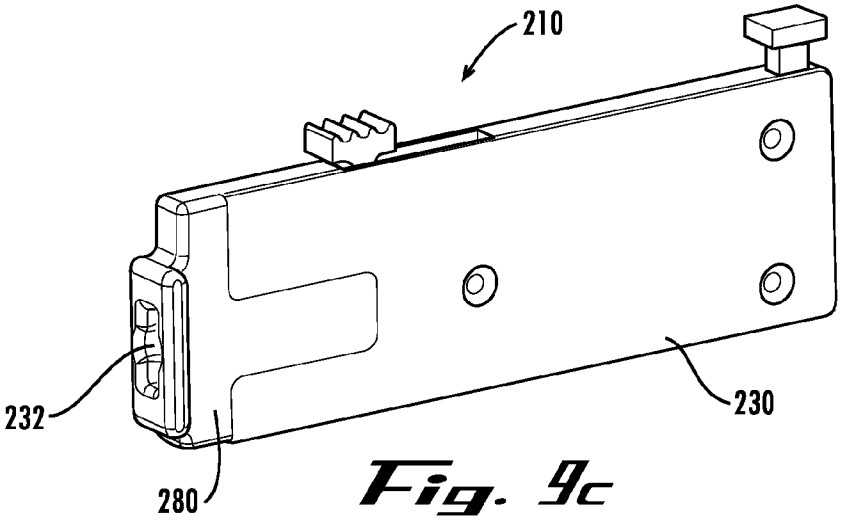

Fig. 9c

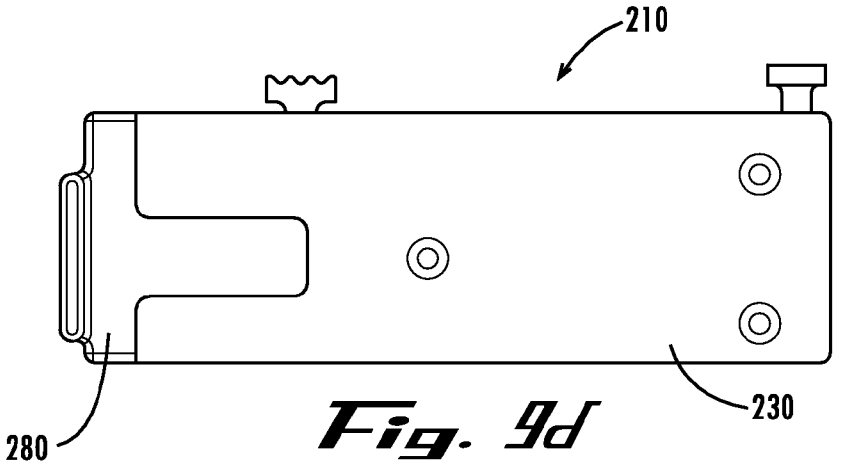

Fig. 9d

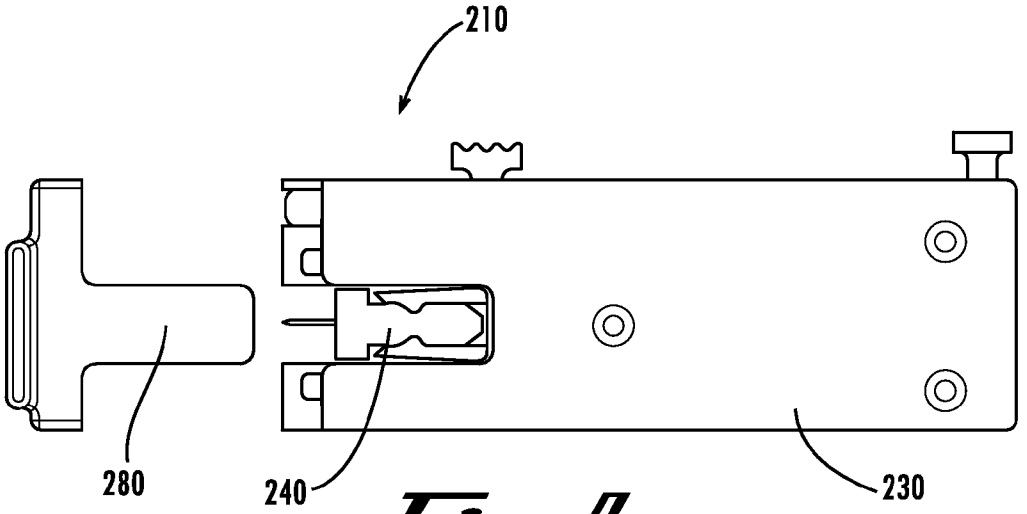

Fig. 9e

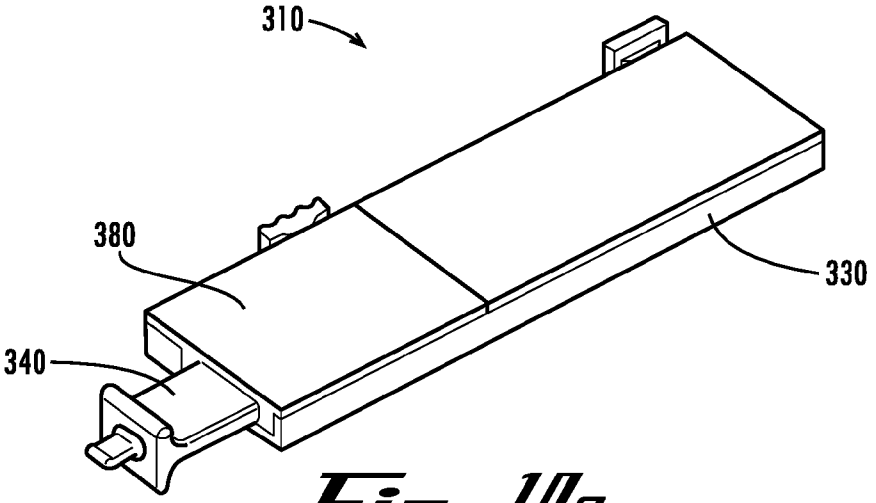

Fig. 10a

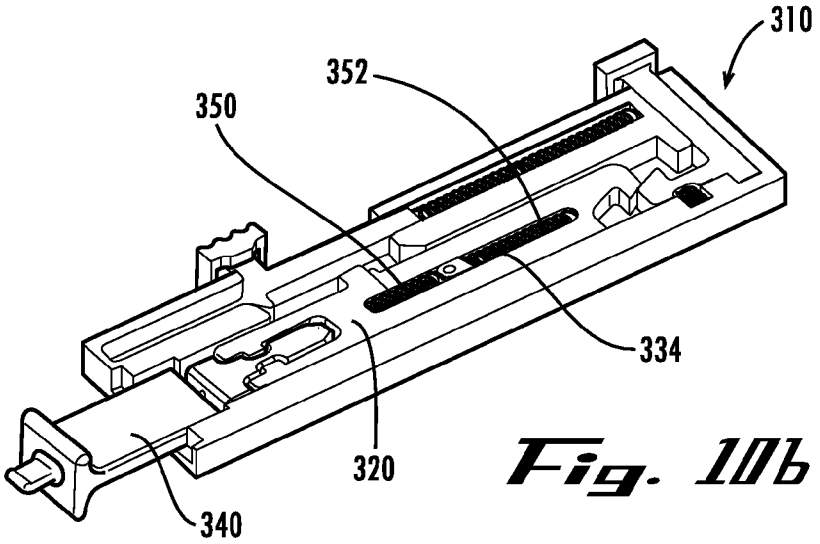

Fig. 10b

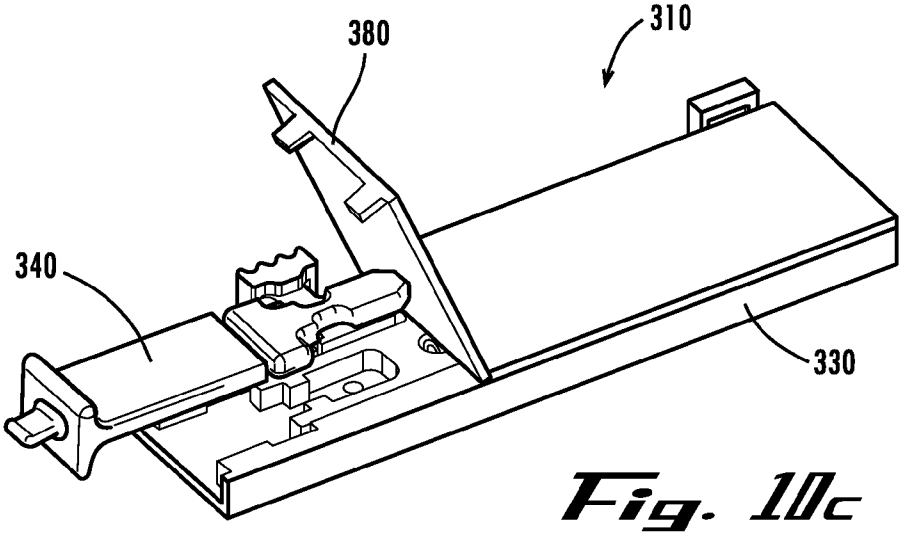

Fig. 10c

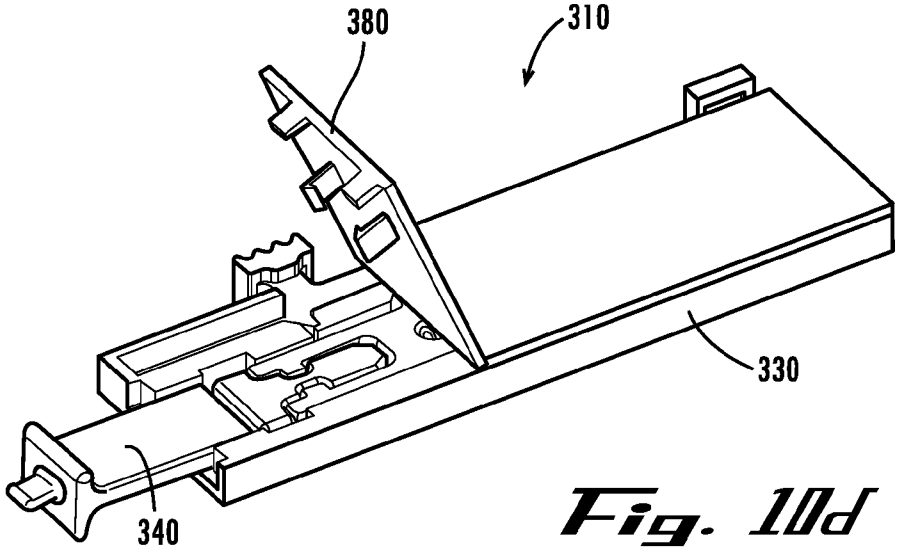

Fig. 10d

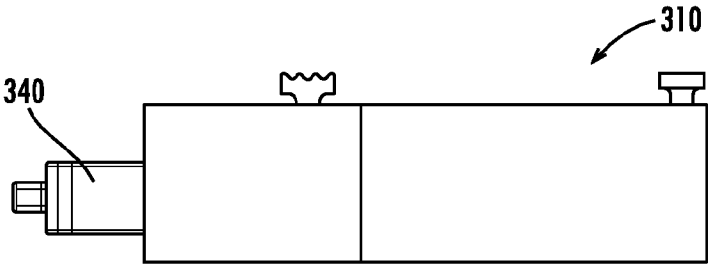

Fig. 10e

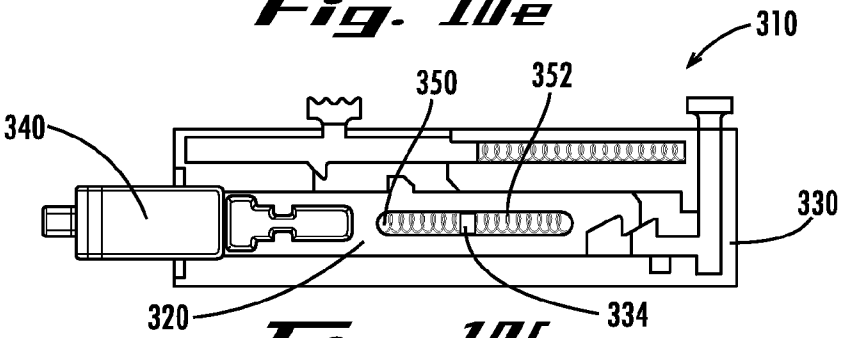

Fig. 10f

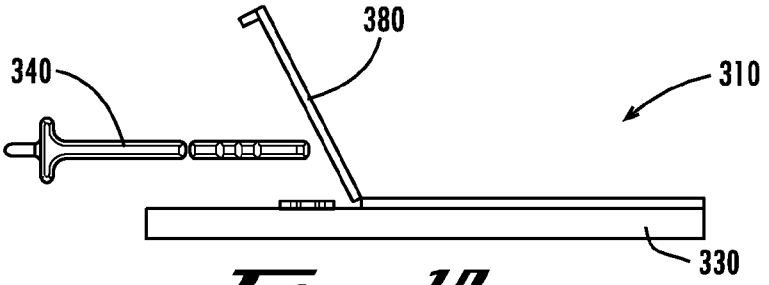

Fig. 10g

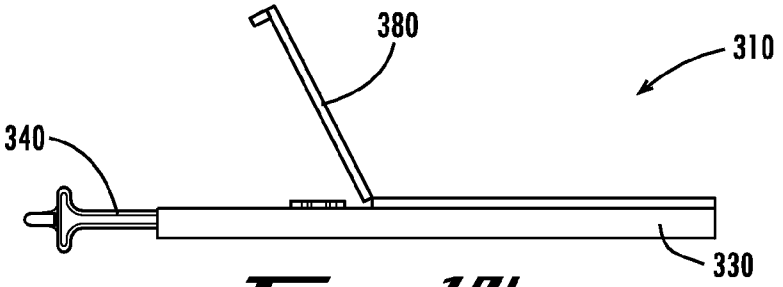

Fig. 10h

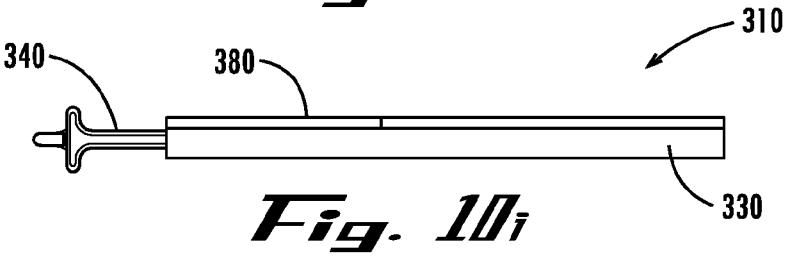

Fig. 10i

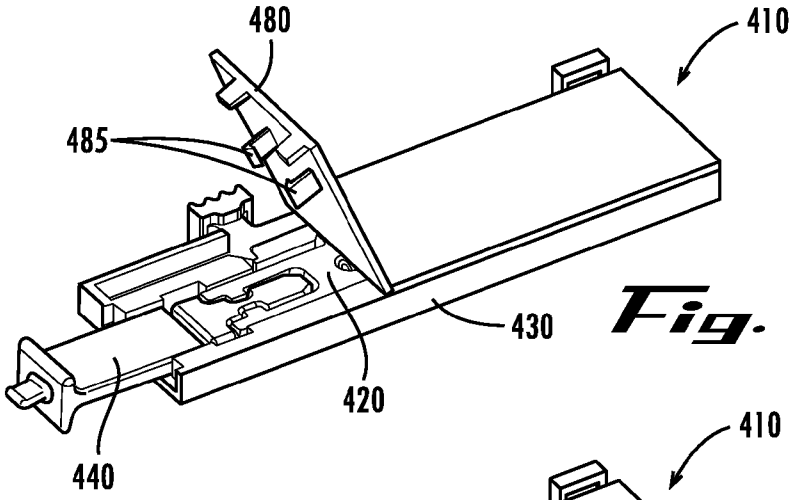

Fig. 11a

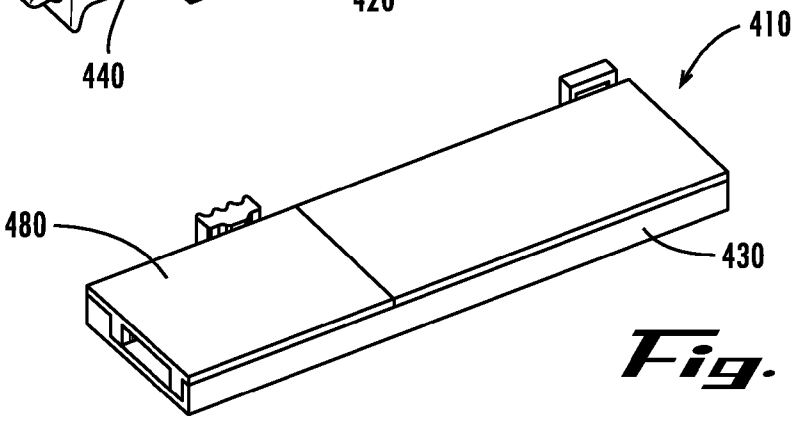

Fig. 11b

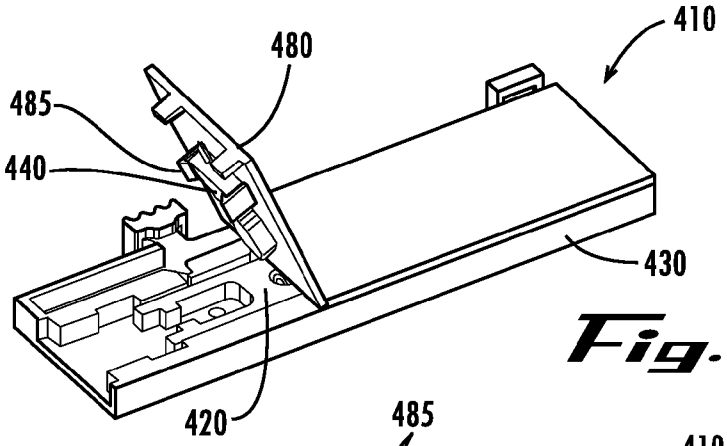

Fig. 11c

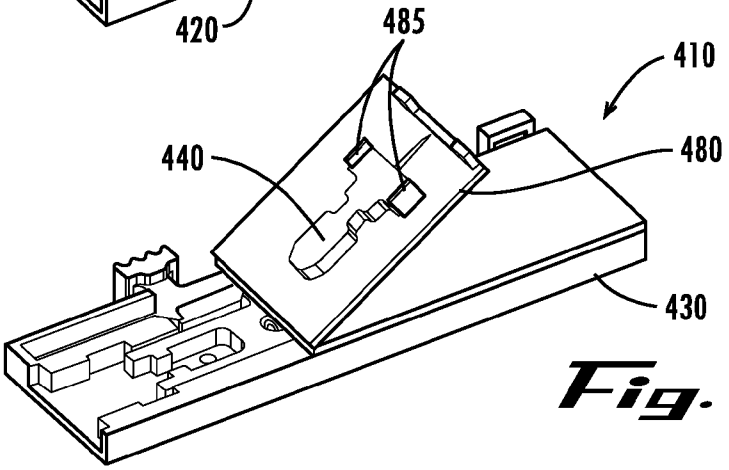

Fig. 11d

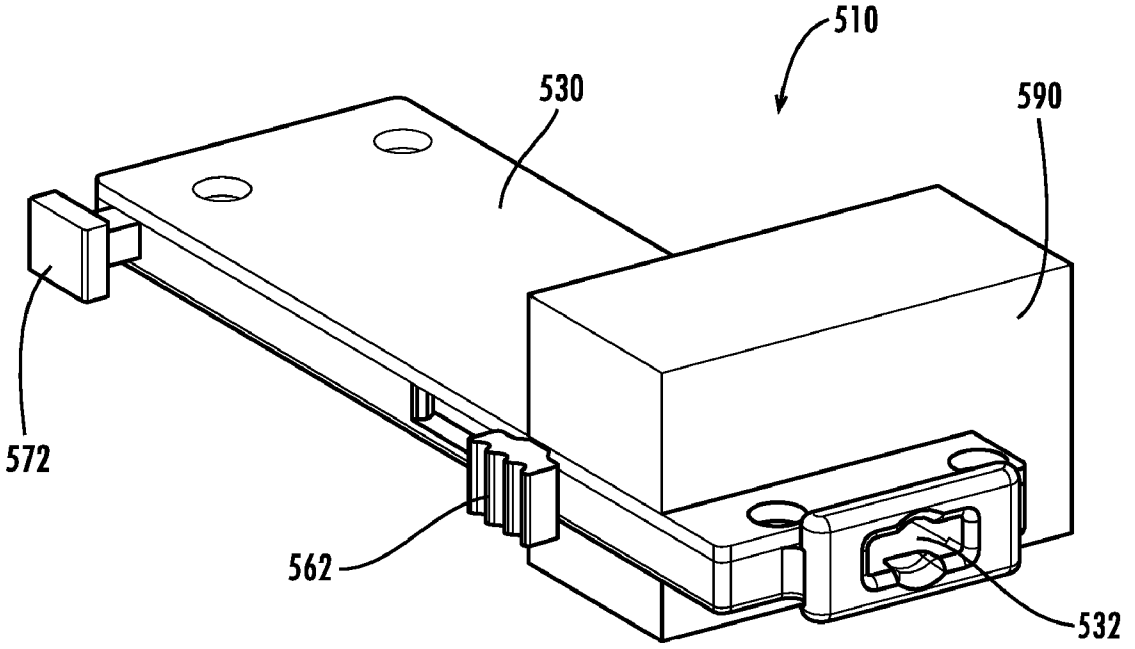

Fig. 12

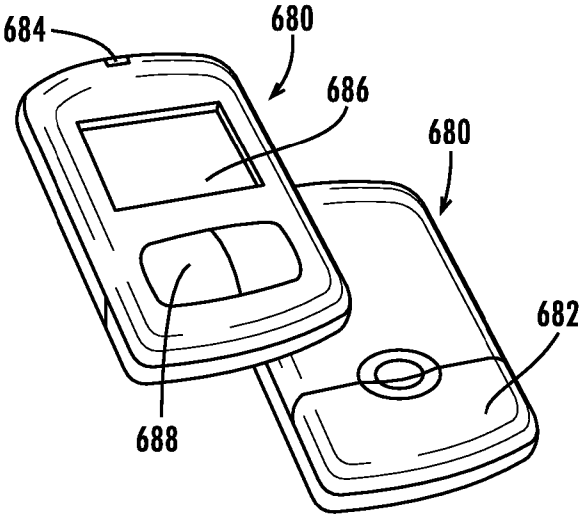

Fig. 13a

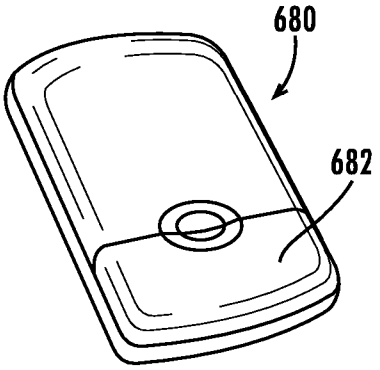

Fig. 13b

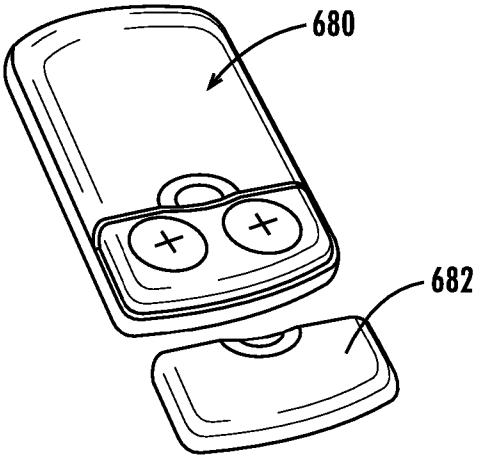

Fig. 13c

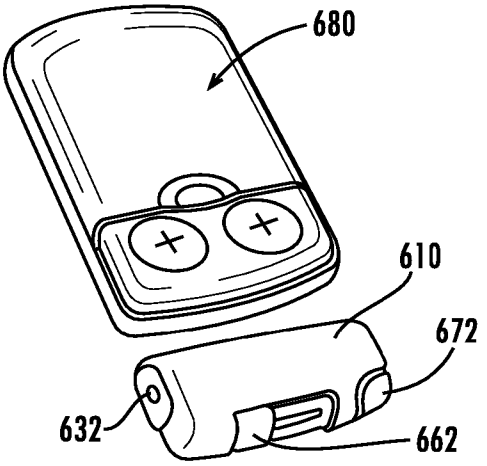

Fig. 13d

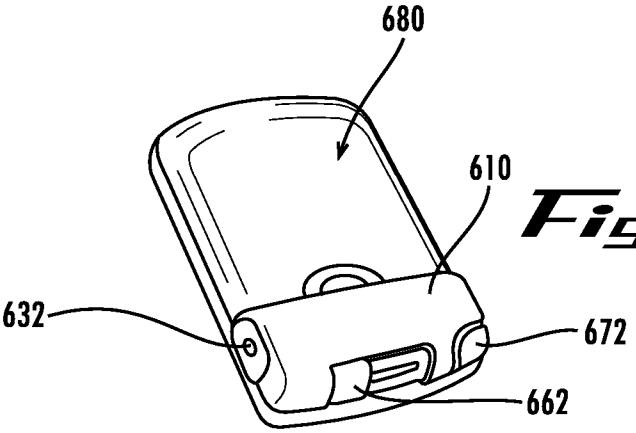

Fig. 13e

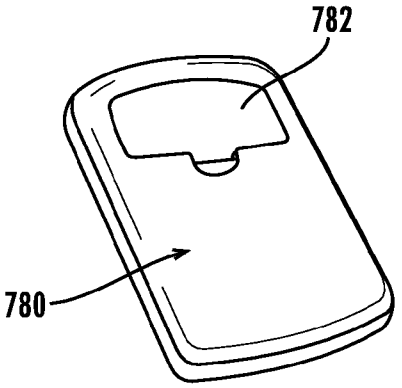

Fig. 14a

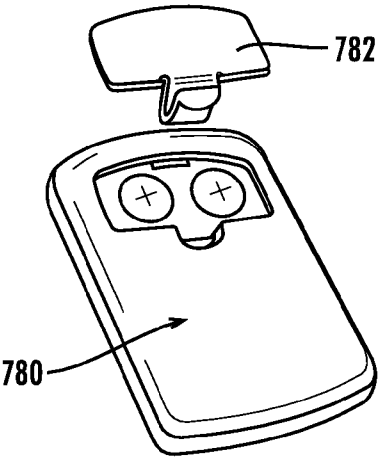

Fig. 14b

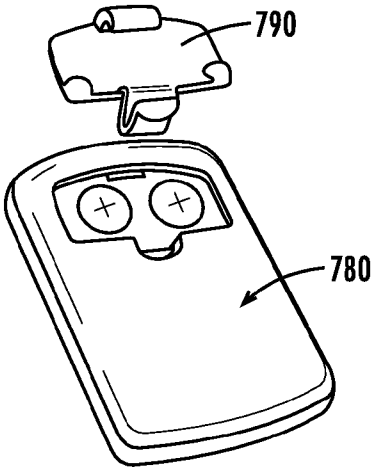

Fig. 14c

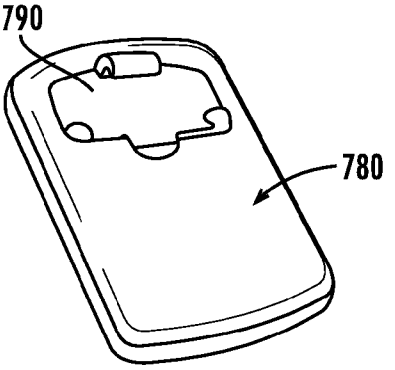

Fig. 14d

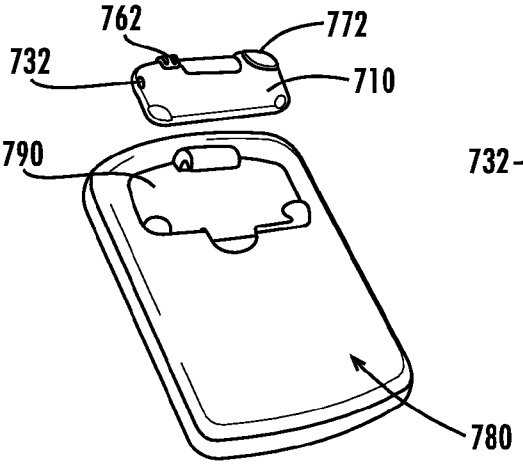

Fig. 14e

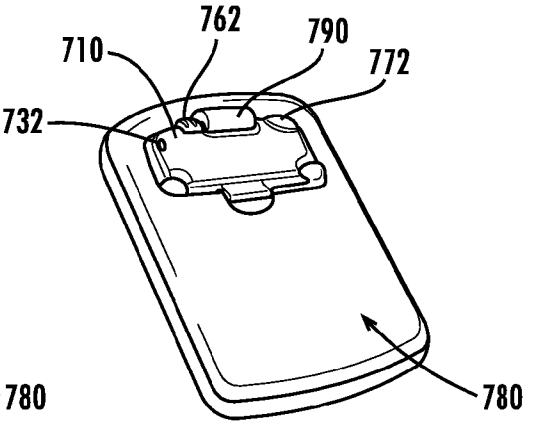

Fig. 14f

NARROW-PROFILE LANCING DEVICE

CROSS-REFERENCE TO RELATED APPLICATION

[0001] This application claims the benefit of U.S. Provisional Patent Application Ser. No. 60/667,958, filed Apr. 4, 2005; which application is incorporated herein by reference in its entirety for all purposes.

TECHNICAL FIELD

[0002] The present invention relates generally to lancing devices for medical sampling of blood or other body fluids of a human or animal subject. More particularly, the invention relates to a miniature lancing device having components arranged in a compact planar configuration allowing the device to have a narrow profile relative to typical lancing devices.

BACKGROUND OF THE INVENTION

[0003] Many medical procedures require puncturing of the skin, and sometimes underlying tissues, of an animal or human subject. For example, a sharp lancet tip is commonly used to puncture the subject's skin at a lancing site to obtain a sample of blood or other body fluid, as for example in blood glucose monitoring by diabetics and in blood typing and screening applications. A lancing device having a spring-loaded or otherwise energized drive mechanism is often used to carry the lancet along a path of travel, between a retracted or shielded position and an extended position wherein the lancet tip punctures the skin.

[0004] Various forms of lancing devices are known. Many users, however, have found known lancing devices to be too bulky and inconvenient to carry and stow in a pocket or bag. Also, some users find it inconvenient to carry multiple separate components for sampling and testing, such as a lancing device and a meter. Perceived inconvenience can lead to non-compliance with a prescribed testing regimen, potentially adversely affecting the subject's health.

[0005] Thus it can be seen that needs exist for improvements to lancing devices to provide a smaller and thinner lancing device. Needs further exist for a lancing device that can be attached to a blood glucose meter for convenience and to avoid loss. It is to the provision of an improved lancing device meeting these and other needs that the present invention is primarily directed.

SUMMARY OF THE INVENTION

[0006] In example forms, the present invention relates to a miniature lancing device having a thin profile, for easy and convenient stowage. Optionally, the lancing device is configured to be provided as an original component of, or to be attached as a retrofit component onto a glucose test meter. For example, an example embodiment of the invention is a miniature lancing device configured to be used in place of a battery compartment cover of a glucose test meter. This allows the device to be retrofitted on existing meters, or provided as original equipment on a new meter, thereby providing an integrated device.

[0007] In one aspect, the present invention is a lancing device, preferably including a housing having a narrow profile and a slotted opening through a proximal end thereof. The lancing device preferably also includes a lancet carrier translationally mounted to slide along a path of travel within the housing, and having a pair of engagement fingers for releasably receiving a lancet therebetween. The lancing device preferably also includes an energizing member translationally mounted to slide within a lengthwise channel in the housing, generally parallel to the path of travel of the lancet carrier. The lancing device preferably also includes a release member translationally mounted to slide within a transverse channel in the housing, generally perpendicular to the path of travel of the lancet carrier.

[0008] In another aspect, the invention is the combination of a body fluid testing meter having a battery cover opening, and a lancing device configured for engagement with the meter over the battery cover opening.

[0009] In still another aspect, the invention is a lancet, preferably including a body portion having a sharp lancing tip projecting therefrom, and along at least a portion of its length having a flattened profile with a first dimension substantially larger than a second dimension. The lancet preferably also includes a sterility cap detachable from the body portion, and along at least a portion of its length having a flattened profile with a first dimension substantially larger than a second dimension. Prior to detachment of the sterility cap from the body portion, the flattened profile portion of the sterility cap is unaligned with the flattened profile portion of the body portion.

[0010] In another aspect, the invention is a lancing device including a lancet carrier translationally mounted within a housing and movable along a path of travel between a retracted position and an extended position, at least one drive spring engaged between the lancet carrier and the housing, a charging mechanism for moving the lancet carrier into the retracted position and energizing the at least one drive spring, and a release mechanism for holding the lancet carrier in the retracted position until actuated to release the lancet carrier to move along the path of travel under the influence of the at least one drive spring toward the extended position. The lancet carrier, the at least one drive spring, the charging mechanism and the release mechanism are all intersected by a single reference plane containing the path of travel.

[0011] In another aspect, the invention is a lancing device having an overall thickness of less than 0.25" (0.6 cm).

[0012] In another aspect, the invention is the combination of a blood glucose test meter having a battery compartment, and a lancing device for releasable coupling to the blood glucose test meter over the battery compartment.

[0013] In still another aspect, the invention is a lancing device including a housing having a slotted lancet opening with a first opening dimension greater than a second opening dimension thereof, and a lancet releasably engagable with said lancing device. The lancet has a lancet body with a sharp lancet tip projecting therefrom and a cap removably covering the sharp lancet tip. The lancet body has a first lancet body dimension less than the first opening dimension but greater than the second opening dimension, and has a second lancet body dimension less than the second opening dimension. In this manner, the lancet body resists rotation within the slotted lancet opening upon twisting of the cap to detach the cap from the lancet body.

[0014] And in another aspect, the invention is a lancet including a lancet body having a sharp lancet tip projecting therefrom, and a protective cap removably covering the sharp lancet tip. The protective cap includes a release member for releasing the lancet body from engagement with a lancing device.

[0015] These and other aspects, features and advantages of the invention will be understood with reference to the drawing figures and detailed description herein, and will be realized by means of the various elements and combinations particularly pointed out in the appended claims. It is to be understood that both the foregoing general description and the following brief description of the drawings and detailed description of the invention are exemplary and explanatory of preferred embodiments of the invention, and are not restrictive of the invention, as claimed.

BRIEF DESCRIPTION OF THE DRAWINGS

[0016] **FIG. 1** is a perspective view of a lancing device according to an example form of the present invention, with an outer cover portion removed to show internal components thereof.

[0017] **FIG. 2** shows the lancing device of **FIG. 1** with its drive mechanism in an equilibrium position and receiving a lancet.

[0018] **FIG. 3** shows the lancing device of **FIG. 1** with the lancet engaged in the drive mechanism.

[0019] **FIG. 4** shows the lancing device of **FIG. 1** with the drive mechanism charged and the endcap of the lancet removed to expose the sharp lancet tip.

[0020] **FIG. 5** shows the lancing device of **FIG. 1** with its activation mechanism released, the drive mechanism in its forward or lancing position, and the tip of the lancet projecting outwardly from the device's lancet opening.

[0021] **FIG. 6** shows the lancing device of **FIG. 1** with the drive mechanism returned to its equilibrium position and the lancet tip retracted back into the device after lancing, and with a release member positioned for lancet removal.

[0022] **FIG. 7** is a top view of the lancing device of **FIG. 1** showing its narrow profile.

[0023] **FIGS. 8*a*-8*h*** show a lancing device and lancet according to another embodiment of the present invention.

[0024] **FIGS. 9*a*-9*e*** show a lancing device according to another embodiment of the present invention.

[0025] **FIGS. 10*a*-10*i*** show a lancing device and lancet according to another embodiment of the present invention.

[0026] **FIGS. 11*a*-11*d*** show a lancing device according to another embodiment of the present invention.

[0027] **FIG. 12** shows a lancing device according to another embodiment of the present invention.

[0028] **FIGS. 13*a*-13*e*** show a lancing device according to another embodiment of the present invention, the lancing device being installed in place of a battery cover on a blood-glucose testing meter.

[0029] **FIGS. 14*a*-14*f*** show a lancing device according to another embodiment of the present invention, the lancing device being engaged onto a mounting clip installed in place of a battery cover on a blood-glucose testing meter.

DETAILED DESCRIPTION OF EXAMPLE EMBODIMENTS

[0030] The present invention may be understood more readily by reference to the following detailed description of the invention taken in connection with the accompanying drawing figures, which form a part of this disclosure. It is to be understood that this invention is not limited to the specific devices, methods, conditions or parameters described and/or shown herein, and that the terminology used herein is for the purpose of describing particular embodiments by way of example only and is not intended to be limiting of the claimed invention. Also, as used in the specification including the appended claims, the singular forms "a,""an," and "the" include the plural, and reference to a particular numerical value includes at least that particular value, unless the context clearly dictates otherwise. Ranges may be expressed herein as from "about" or "approximately" one particular value and/or to "about" or "approximately" another particular value. When such a range is expressed, another embodiment includes from the one particular value and/or to the other particular value. Similarly, when values are expressed as approximations, by use of the antecedent "about," it will be understood that the particular value forms another embodiment.

[0031] With reference to **FIGS. 1-7**, an example form of a lancing device **10** according to the present invention is shown. A lancet holder or carrier **20** is translationally mounted within a housing **30**. The housing **30** is shown in the attached drawing figures with its side cover panels removed to more clearly show internal components. The unshown cover panels are preferably attached by screws, rivets, crush-pins, snap-fittings, adhesive, solvent or thermal welding, or other attachment means, to substantially fully enclose the internal components of the device. Alternatively, the housing **30** is an integral component including the unshown side cover portions, for example formed as a single molding of plastic or other structurally stable material(s). The housing **30** preferably has a very compact, flat and slim exterior profile, for example having dimensions of about 0.125" thick×1.85" long×0.725" high (0.3 cm×4.7 cm×1.8 cm) in one example embodiment. In preferred forms, the aspect ratio (height:thickness) of the device is at least 4:1, and more preferably at least 5:1. It is preferred that the overall thickness of the device be less than 0.25" (0.6 cm), and more preferably less than 0.125" (0.3 cm). The compact size and thin profile of the internal componentry of the lancing device of the present invention advantageously permit the device to be used as a standard or generic "core" or chassis platform for various different lancing device formats (i.e., lancing devices having distinct external appearances and geometries may have common internal workings in the form of the device described herein), facilitate easier and more convenient stowage and use, and allow the device to be mounted to a meter or other device without negatively impacting its utility or appearance in a significant manner.

[0032] The lancet carrier **20** preferably comprises a pair of resilient fingers or forks **22** for releasably engaging a miniature lancet **40**. The lancet **40** is preferably inserted and removed through a slotted opening **32** in the proximal end of

the housing **30**. The slotted opening **32** has a length considerably greater than its width, most preferably having a length at least twice its width. The lancet carrier **20** preferably also comprises slots **24** and/or contact faces for receiving and/or engaging one or more drive springs **50** and/or one or more retraction springs **52** for advancing and retracting the lancet carrier along its path of travel within the housing **30** to carry the lancet along its lancing stroke. In the depicted embodiment, two drive springs **50** and one retraction spring **52** are included in the form of coil springs, positioned within separate slots extending generally parallel to one another within the carrier **20**. In alternate embodiments, a single drive spring is provided, having a substantially greater stiffness than the return spring, and/or torsion springs, leaf springs, or other forms of drive mechanisms are provided. The drive and return springs **50**, **52** are preferably captured in compression or otherwise engaged between the contact faces of the lancet carrier **20** and lugs **34** or other surface features, recesses or projections of the housing **30**. The walls of the slots and the sidewalls of the housing assist in maintaining the various biasing springs of the lancing device aligned and in place.

[**0033**] An energizing or charging member **60** is preferably translationally mounted to slide within a lengthwise channel **36** in the housing **30**, generally parallel to the path of travel of the lancet carrier **20**. A gripping pad or surface **62** preferably projects from the energizing member **60**, outwardly of the housing, to facilitate actuation by a user. A tooth or pawl **64** projects laterally from the energizing member **60**, for engagement with a cooperating projection **26** or other surface feature of the lancet carrier **20**. An energizing member return spring **66** is preferably engaged in compression between the energizing member **60** and the housing **30**, to bias the energizing member **60** toward the proximal end of the lancing device.

[**0034**] A release member **70** is preferably translationally mounted to slide within a transverse channel **38** in the distal end of the housing **30**, generally perpendicular to the path of travel of the lancet carrier **20**. The release member **70** preferably includes a release button **72** projecting outwardly from the housing **30** to facilitate user actuation. A release member return spring **74** is preferably engaged in compression between the release member **70** and the housing **30**, to bias the release member **70** in the direction of the release button **72**. The release member **70** preferably also comprises a sear **76** or other surface feature for releasably engaging a cooperating portion of the lancet carrier **20**, to retain the lancet carrier retracted in its energized position until released by the user actuating the release button **72**. The lancet carrier **20**, the energizing member **60**, and the release member **70** are all preferably intersected by a single common reference plane R, are relatively thin in the direction normal to the reference plane, and have generally flat and contiguous side faces lying parallel to the reference plane. Additionally, the associated biasing members **50**, **52**, **66** and **74** preferably each have their axes of bias along the reference plane R or closely parallel thereto. And the line or path of travel of the lancet **40** preferably also lies in the reference plane R. The thin and planar arrangement of components in this manner allows the overall device **10** to be contained within a very compact and narrow-profile external housing, as seen in example form in **FIG. 7**.

[**0035**] The lancet **40** of the present invention preferably comprises a small and lightweight lancet body portion **42**, preferably having a sharp lancet tip **43** projecting therefrom in the form of a metal needle or blade. Preferably, the lancet body **42** is a molded plastic member having a shank portion of the needle or blade **43** securely embedded therein. The lancet body **42** preferably has a flattened profile along at least a proximal portion of its length, having a first dimension (height) substantially larger than a second dimension (width), and configured to pass freely through the slotted opening **32** in the housing **30** when aligned therewith, but to prevent rotation of the lancet body within the slotted opening of the housing. Notches or recesses in the sides of the lancet body **42** are preferably provided to receive and releasably engage cooperating projections formed on the resilient fingers **22** of the lancet carrier **20**. The lancet **40** preferably further comprises a removable sterility cap **44**. The sterility cap **44** is preferably co-molded with the lancet body portion **42**, and the two are connected at a narrow or notched neck portion for ease of separation upon removal of the sterility cap. The sterility cap **44** is preferably relatively large or oversized, as compared to the lancet body **42**, to facilitate easier handling and loading of the lancet into the lancing device, which is of particular advantage to users having reduced visual acuity and/or reduced manual dexterity. The sterility cap **44** optionally has a flared or T-shaped configuration for better gripping during insertion of the lancet and removal of the cap. The sterility cap **44** preferably has a flattened profile along at least a distal portion of its length, generally matching the flattened profile of the proximal portion of the lancet body portion, but initially oriented generally perpendicularly or obliquely relative thereto. The sterility cap **44** preferably also has a release finger **46** projecting therefrom, to assist in release of a used lancet from the fingers or forks of the lancet carrier, as detailed below.

[**0036**] In use, the user loads a lancet **40** into the lancing device **10** by inserting the lancet body **42** into the slotted opening **32** of the housing, until the flattened profile of the lancet's sterility cap **44** contacts the proximal face of the housing **30**, with the profile of the sterility cap being oriented generally crosswise to the slotted opening (**FIG. 2**). The sterility cap **44** is then twisted about 90°, while the lancet body is prevented from twisting due to its flattened profile being engaged within the slotted opening **32**, thereby aligning the flattened profile of the cap with the slotted opening. This twisting of the sterility cap **44** serves to sever or detach the sterility cap from the lancet body **42** at the neck portion therebetween, and to loosen the attachment between the sterility cap and the lancet needle. The T-shaped configuration of the sterility cap **44** assists the user in gripping and twisting the cap in this manner. With the profile of the sterility cap **44** now aligned with the slotted opening **32** of the housing, the lancet **40** is inserted further into the housing, until the lancet body **42** snaps into engagement in the resilient fingers **22** of the lancet carrier (**FIG. 3**). The sterility cap **44** may then be removed, or can be left in place until the device is energized and ready for use.

[**0037**] The user then actuates the energizing member **60** by sliding the gripping pad **62** rearwardly, away from the end of the housing **30** having the slotted opening **32** therein. Engagement of the pawl **64** of the energizing member **60** with the projection **26** of the lancet carrier **20** as the energizing member is operated retracts the lancet carrier and

energizes the drive springs **50**. Alternatively, pushing the lancet further into the housing energizes the drive spring(s). As the lancet carrier **20** moves into its retracted position, the lancet carrier contacts an inclined surface of the sear **76** of the release member **70**, depressing the release member against the bias of the release member return spring **74**. Upon reaching its fully retracted position, the sear **76** of the release member **70** snaps upwardly into engagement with the lancet carrier **20** under the influence of the release member return spring **74**, to retain the lancet carrier retracted in its energized position (**FIG. 4**). The user then releases the energizing member **60** to return to its forward position under the influence of the energizing member return spring **66**.

[**0038**] The sterility cap **44** is removed, and the slotted proximal face of the housing is placed against the subject's skin at the intended lancing site. The user presses the release button **72** of the release member **70**, releasing the sear **76** from engagement with the lancet carrier **20**. The lancet carrier **20** is propelled forward into its advanced position under the influence of the drive springs **50**, driving the sharp lancet tip through the slotted opening **32** and outwardly of the housing **30**, to penetrate the subject's skin at the lancing site (**FIG. 5**). The lancet carrier **20** is then retracted under the influence of the retraction spring **52**, to return the lancet tip into a shielded equilibrium position within the housing (**FIG. 6**).

[**0039**] After use, the lancet body **42** is preferably removed from the lancing device **10**, for replacement with a fresh lancet for subsequent use. The release finger **46** of the sterility cap **44** is inserted into a hole **39** in the housing, extending between the forks **22** of the lancet carrier, and behind the lancet body **42** (**FIG. 6**). The lancet carrier **20** is then retracted out of engagement with the lancet body **42** by sliding the energizing member **60** rearwardly, causing the forks **22** to flex outwardly and release the lancet body, and the used lancet is discharged from the slotted opening **32** or otherwise removed from the device **10**. In alternate forms, an integral removal member is provided for releasing the lancet from the carrier, for example comprising an internal finger selectively positionable between the forks **22** of the lancet carrier and behind the lancet body **42**, and an external actuation button or lever.

[**0040**] One or more guides or limit members **28** are optionally provided on the lancet carrier **20**, moving within one or more corresponding guide channels formed in the housing **30**, to maintain transverse alignment of the lancet carrier (i.e., limiting up-and-down movement of the carrier and lancet perpendicular to the lancet stroke), and to provide a forward stop to limit the stroke of the lancet in the forward axial direction thereby more precisely controlling the depth of penetration of the lancet into the skin. The forks **22** of the lancet carrier **20** are preferably guided between a pair of retaining panels **35** at the proximal end of the housing adjacent the slotted opening **32** as the lancet carrier **20** moves into its advanced or lancing position, preventing the forks from spreading apart and potentially releasing the lancet **40** during the lancing operation (**FIG. 5**) and providing additional transverse guidance and stability. The retaining panels do not extend so far distally, however, as to interfere with the forks **22** spreading apart to receive or release the lancet **40** when the carrier **20** is positioned in its retracted or equilibrium positions. In preferred form, the lancet body **42** is of substantially the same thickness as the lancet carrier **20**, and the lancet body and the lancet carrier are coplanarly aligned when the lancet is installed, so that lateral guidance (i.e., limiting side-to-side movement of the carrier and lancet perpendicular to the lancet stroke) and stability are provided to both the lancet and the carrier during the lancing stroke as a result of smoothly-sliding, low-friction, close interaction of the parts along the interior faces of the side panels of the housing **30**. By utilizing the interior faces of the housing as lateral guidance features in this manner, the need for separate lateral guidance components is eliminated and a more compact and narrow profile is enabled (**FIG. 7**).

[**0041**] **FIGS. 8*a*-8*h*** show another example embodiment of a lancing device **110** and a lancet **140** according to the present invention. In this embodiment, the endcap **144** of the lancet **140** comprises an inclined or curved removal surface **145**, which acts as a wedge or cam when pushed into the lancet-removal opening **139**, to release the lancet body **142** from the forks of the lancet carrier. Viewed from its end, the endcap **144** of the lancet **140** preferably has a generally T-shaped profile, with the removal surface **145** being positioned on the free end of its upright, and the lancet-removal opening **139** is preferably correspondingly T-shaped. In alternate embodiments, the endcap of the lancet comprises a wedge or pin, which is inserted through the lancet-removal opening, and the endcap is pivotally toggled to pry the spent lancet body from out of engagement with the forks of the lancet carrier.

[**0042**] Another example embodiment of a lancing device **210** according to the present invention is shown in **FIGS. 9*a*-9*e***. In this embodiment, a detachable endcap **280** is provided at the proximal end of the housing **230**. The endcap **280** is removed for access to insert a fresh lancet **240** into engagement with the lancet carrier, and/or to remove a spent lancet. The endcap **280** preferably comprises a proximal portion having a contact face defining the lancet opening **232**, and at least one side panel portion extending distally therefrom to cover a cutout access portion of the housing **230** permitting lancet removal and insertion. The detachable endcap may be entirely removable from the remainder of the housing, or may be tethered or hingedly connected to the remainder of the housing to prevent loss.

[**0043**] In the example embodiment of the present invention depicted in **FIGS. 10*a*-10*i***, the lancing device **310** comprises a housing **330** having a hinged access panel or door **380** providing access for removal and/or insertion of the lancet **340** to/from the lancet carrier **320**. Additionally, a drive spring **350** and a return spring **352** are positioned within a single elongate slot formed in the lancet carrier **320**, and are aligned coaxially with one another on opposite sides of a biasing lug **334** of the housing **330**. This aligned spring configuration enables a housing geometry that is shorter in height than the parallel spring arrangement described above.

[**0044**] Another example embodiment of a lancing device **410** having a hinged access door **480** in the housing **430** is shown in **FIGS. 11*a*-11*d***. In this embodiment, the inner face of the door **480** includes one or more clips **485** for retaining the lancet **440**. A lancet **440** is installed into the device by placing the lancet body into the carrier **420** (**FIG. 11A**), or alternatively by engaging the lancet body with the clips **485** on the access door. The access door **480** is closed, and the device is operated in similar fashion to that described above.

After use, removal of the spent lancet **440** is facilitated by the retention of the lancet on the access door **480** by the clips **485**, such that the lancet may be more easily removed when the door is opened. The clips **485** optionally also provide lancet guidance.

[**0045**] **FIG. 12** shows another example embodiment of a lancing device **510** according to the present invention. In this embodiment, a clip **590** containing a plurality of lancets, preferably in a stacked or sequential array, is provided. Actuation of the energizing member **562** preferably loads a fresh lancet for use and discharges a used lancet from the lancet carrier. The clip optionally includes a collection reservoir for used lancets, or alternatively used lancets are discharged from the device for external disposal. Other than the clip-feeding lancet mechanism, the remainder of the device **510** is substantially similar to that described above, having a housing **530** containing a translational lancet carrier and drive mechanism, a lancet opening **532** through which the lancet tip projects in its extended position, a charging or energizing mechanism actuated by the energizing member **562**, and a release mechanism actuated by the release button **572**.

[**0046**] Due to the compact size and narrow profile of example embodiments, the lancing device of the present invention is suitable for mounting or attachment to a blood glucose test meter or other device or carrier. Preferably, the lancing device of the present invention is mountable on or in place of a removable portion or component of the meter, removal or alteration of which does not negatively impact the meter's operation. For example, various forms of the invention can be mounted to or in place of the removable battery cover of a blood glucose test meter, such that the lancing device is carried with the meter for greater convenience and ease of use. The lancing device can be provided as original equipment as a detachable or integral part of a new meter, and/or can be provided as an upgrade or retrofit component for backwards-compatible attachment to an existing meter, such as for example the Bayer Ascensia Contour™ blood glucose meter sold by Bayer Healthcare LLC of Mishawaka, Ind.; the BD Logic Meter; the Lifescan OneTouch Ultra Meter, and/or the Abbott FreeStyle Flash Meter. The housing of the lancing device is preferably similar in size and shape to the battery cover of the particular blood-glucose testing meter to which it is intended to be mounted, and the narrow profile of the lancing device does not significantly alter the overall external geometry of the meter. The housing of the lancing device preferably comprises external surface features substantially conforming to the attachment clips, channels, tabs, slots and/or other corresponding coupling members of a battery cover, whereby the lancing device can be snapped or clipped onto a meter in place of the standard battery cover. Preferably, one or more of the actuator components and/or the lancet opening of the lancing device project beyond or adjacent the outer peripheral edges of the meter or other object to which the device is mounted, for easier access during use.

[**0047**] For example, as shown in **FIGS. 13***a*-**13***e*, the lancing device **610** is configured for attachment in place of a battery cover **682** of a blood glucose testing meter **680**. The blood glucose testing meter **680** is preferably of standard form, having a slot **684** for receiving a test strip, a display **686**, and one or more controls **688**. The external geometry of the lancing device **610** generally matches the shape and size of the battery cover **682**, and includes one or more coupling member(s) for coupling to the meter **680** substantially similar to the corresponding coupling member(s) of the battery cover. The lancet opening **632** preferably projects a small distance beyond the side edge of the meter, such that the user can readily place a finger or alternate lancing site against the contact face surrounding the lancet opening. And the energizing member **662** and release button **672** preferably also project a small distance beyond the outer periphery of the meter, for ease of access and use.

[**0048**] In an another example form of the present invention shown in **FIGS. 14***a*-**14***f*, the lancing device **710** is mountable into or onto a mounting clip **790** that replaces the standard battery cover **782** of a test meter **780**. The mounting clip preferably has a geometry and coupling member configuration substantially similar to the original battery cover, and includes one or more fingers, fittings or other retention means for engaging cooperative elements of the lancing device **710** to permanently or removably secure the lancing device thereto. The lancet opening **732**, the energizing member **762**, and/or the release button **772** preferably project a distance beyond the back panel of the meter, for ease of access and use.

[**0049**] In other embodiments, the lancing device of the present invention is integrally formed with or mountable onto a meter elsewhere other than the battery cover, as by integral molding, adhesive attachment, snap-fitting connection or other attachment means. In further alternate embodiments, the lancing device of the present invention is integrally formed with or mountable onto a carrier other than a blood glucose meter. For example, the lancing device can comprise a clip allowing it to be mounted or attached onto a purse, belt or other item, similar to a pen, a tie-clip or a small pager. Alternatively or additionally, the lancing device includes a ring or loop for attachment to key-ring or other object, in similar fashion to a key-fob.

[**0050**] While the invention has been described with reference to preferred and example embodiments, it will be understood by those skilled in the art that a variety of modifications, additions and deletions are within the scope of the invention, as defined by the following claims.

What is claimed is:

1. A lancing device comprising:

a lancet carrier translationally mounted within a housing and movable along a path of travel between a retracted position and an extended position;

at least one drive spring engaged between the lancet carrier and the housing;

a charging mechanism for moving the lancet carrier into the retracted position and energizing the at least one drive spring; and

a release mechanism for holding the lancet carrier in the retracted position until actuated to release the lancet carrier to move along the path of travel under the influence of the at least one drive spring toward the extended position;

wherein the lancet carrier, the at least one drive spring, the charging mechanism and the release mechanism are all intersected by a reference plane containing the path of travel.

2. The lancing device of claim 1, wherein each drive spring is positioned within a slot formed in the lancet carrier.

3. The lancing device of claim 2, further comprising a return spring positioned within a slot formed in the lancet carrier.

4. The lancing device of claim 3, wherein the return spring and each drive spring are positioned within separate slots formed in the lancet carrier.

5. The lancing device of claim 1, wherein the housing has an overall thickness of less than 0.25" (0.6 cm).

6. The lancing device of claim 1, wherein the housing has an overall thickness of less than 0.125" (0.3 cm).

7. The lancing device of claim 1, wherein the housing has a height to thickness aspect ratio of at least 4:1.

8. The lancing device of claim 1, wherein the housing has a height to thickness aspect ratio of at least 5:1.

9. The lancing device of claim 1, wherein the housing couples to a blood glucose test meter in place of a battery cover component thereof.

10. The lancing device of claim 1, wherein the housing comprises a slotted lancet opening having a length dimension considerably greater than a width dimension.

11. The lancing device of claim 1, wherein the housing comprises first and second side walls having internal faces in sliding contact, respectively, with first and second sides of the lancet carrier to provide lateral guidance of the lancet carrier along the path of travel.

12. The lancing device of claim 1, further comprising a lancet releasably engaged between opposed forks of the lancet carrier.

13. The lancing device of claim 12, wherein the housing comprises retaining panels at a proximal end thereof to prevent the forks from spreading apart and releasing the lancet as the lancet carrier moves into the extended position.

14. The lancing device of claim 12, wherein the lancet has a lancet body with a thickness equal to a thickness of the lancet carrier.

15. The lancing device of claim 12, wherein the housing has a lancet-removal opening through a sidewall portion thereof, whereby a lancet removal member inserted through the lancet-removal opening projects between the opposed forks of the lancet carrier and behind the lancet.

16. The lancing device of claim 1, wherein the housing has a detachable endcap for accessing the lancet carrier to install a lancet therein.

17. The lancing device of claim 1, wherein the housing has a hinged cover for accessing the lancet carrier to install a lancet therein.

18. The lancing device of claim 17, wherein the hinged cover has at least one clip for retaining the lancet upon opening the hinged cover.

19. The lancing device of claim 1, further comprising a clip containing a plurality of lancets for sequential loading into the lancet carrier.

20. A lancing device having an overall thickness of less than 0.25" (0.6 cm).

21. The lancing device of claim 20, having an overall thickness of less than 0.125" (0.3 cm).

22. The lancing device of claim 20, having a height to thickness aspect ratio of at least 4:1.

23. The lancing device of claim 20, having a height to thickness aspect ratio of at least 5:1.

24. The lancing device of claim 20, comprising at least one coupling for attachment in place of a battery cover of a blood glucose test meter.

25. In combination, a blood glucose test meter comprising a battery compartment, and a lancing device for releasable coupling to the blood glucose test meter over the battery compartment.

26. The combination of claim 25, wherein the lancing device releasably couples directly to the blood glucose test meter over the battery compartment.

27. The combination of claim 25, wherein the lancing device is mounted to a mounting clip releasably coupled to the blood glucose test meter over the battery compartment.

28. A lancing device comprising a housing having a slotted lancet opening with a first opening dimension greater than a second opening dimension thereof, and a lancet releasably engagable with said lancing device;

said lancet having a lancet body with a sharp lancet tip projecting therefrom and a cap removably covering the sharp lancet tip;

wherein the lancet body has a first lancet body dimension less than the first opening dimension but greater than the second opening dimension, and has a second lancet body dimension less than the second opening dimension;

whereby the lancet body resists rotation within the slotted lancet opening upon twisting of the cap to detach the cap from the lancet body.

29. The lancing device of claim 28, wherein at least a portion of the cap has a flattened profile initially unaligned with an adjacent flattened profile portion of the lancet body.

30. The lancing device of claim 28, wherein the removable cap has a flared gripping portion.

31. The lancing device of claim 28, wherein the removable cap comprises a release finger portion for insertion into the housing to release the lancet from engagement with the lancing device.

32. The lancing device of claim 31, wherein the release finger portion of the cap comprises an inclined removal surface.

33. A lancet comprising a lancet body having a sharp lancet tip projecting therefrom, and a protective cap removably covering the sharp lancet tip, said protective cap comprising a release member for releasing the lancet body from engagement with a lancing device.

34. The lancet of claim 33, wherein the protective cap has a generally T-shaped profile.

35. The lancet of claim 33, wherein the release member comprises a release finger projecting axially from a flared end of the protective cap.

36. The lancet of claim 33, wherein the release member comprises an inclined surface projecting laterally from the protective cap.

* * * * *