Dec. 19, 1967 J. L. HIGGINS 3,358,689

INTEGRAL LANCET AND PACKAGE

Filed June 9, 1964 2 Sheets-Sheet 1

Fig.1

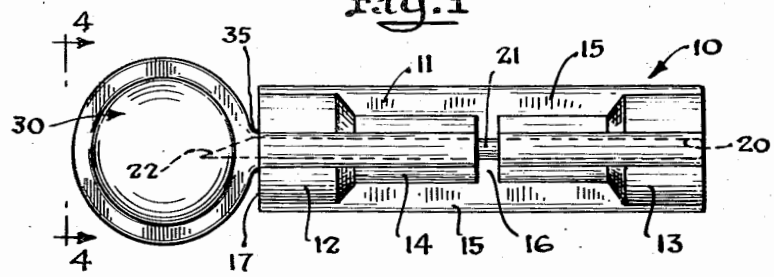

Fig.4

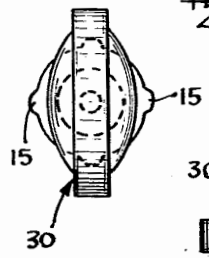

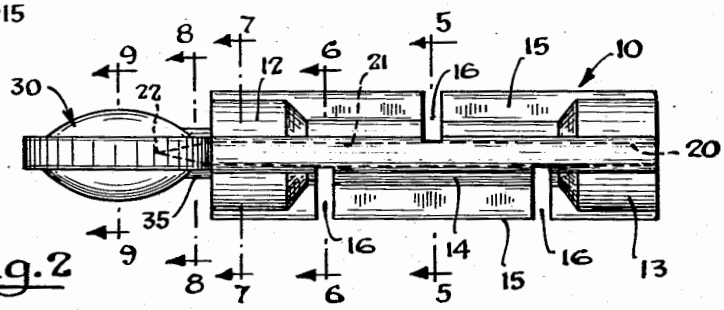

Fig.2

Fig.3

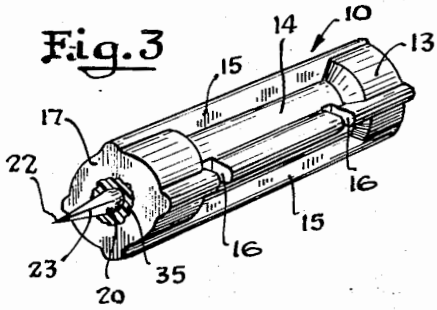

Fig.6

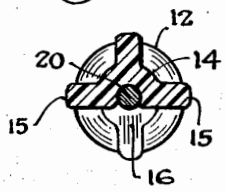

Fig.5

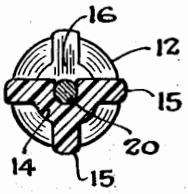

Fig.8

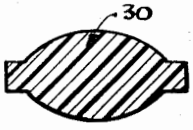

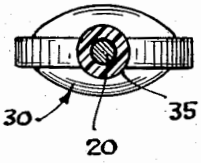

Fig.7

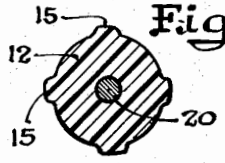

Fig.9

Inventor
JOHN L. HIGGINS

by Hibben, Noyes & Bicknell
Attorneys

Fig. 10

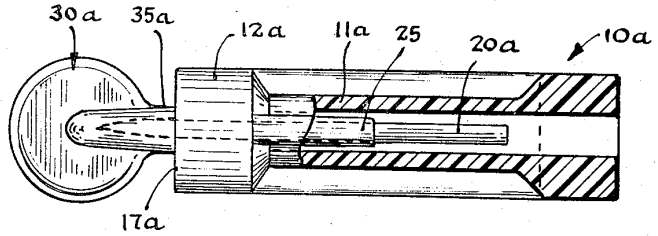

Fig. 11

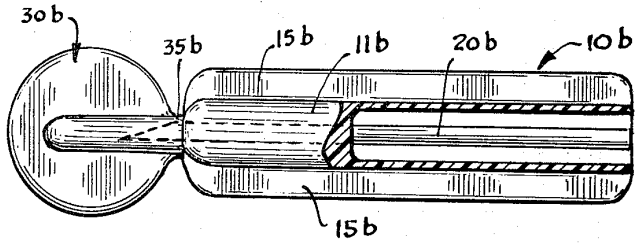

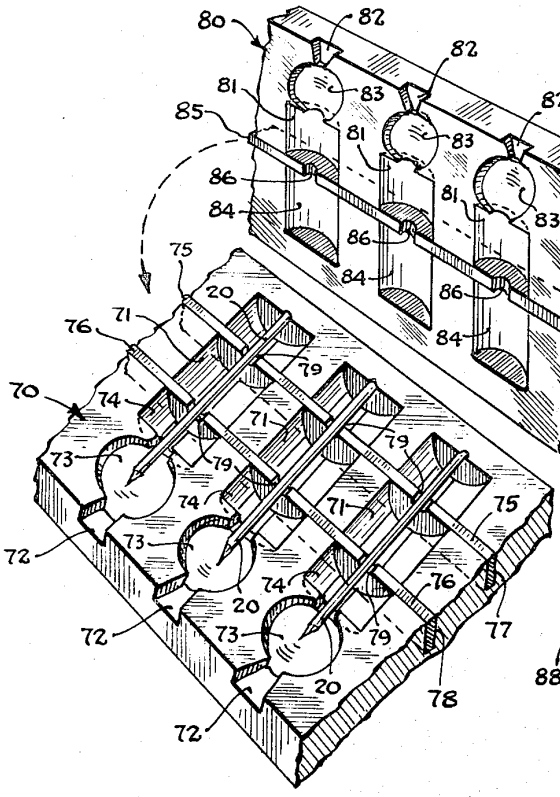

Fig. 12

Fig. 13

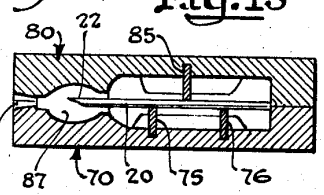

Inventor
JOHN L. HIGGINS
By Hibben, Noyes & Bicknell
Attorneys

United States Patent Office

3,358,689

Patented Dec. 19, 1967

1

3,358,689
INTEGRAL LANCET AND PACKAGE

John L. Higgins, Daytona Beach, Fla., assignor to Roehr Products Company, Inc., De Land, Fla., a corporation of Delaware

Filed June 9, 1964, Ser. No. 373,775
5 Claims. (Cl. 128—329)

The present invention relates generally to an improved integral lancet and package, and more particularly to an improved package and disposable medical lancet unit of the type suitable for making a slight puncture in the skin of an individual to permit collecting a drop of blood for diagnostic purposes or the like medical use and to an improved method of producing said integral lancet unit and package.

Various means have heretofore been used for making a slight puncture or incision in the skin of a patient for effecting capillary bleeding, including such means as a pointed needle which requires sterilization immediately before use and a special stamped thin metal lancet which is pre-sterilized and packaged in a sterile wrapper. While the latter package avoids the necessity of sterilizing each lancet immediately before use, there is considerable difficulty in packaging a small thin metal lancet, and there is the danger of the sterile wrapper being accidentally torn with consequent danger of bacterial contamination of the lancet. Also, the cost of individually packaging each sterile lancet adds appreciably to the total cost of the lancet unit. A still further disadvantage of the lancets of the latter type which are formed by stamping from thin metal is the danger of the weak stamped metal part bending during use, and the tendency of these lancets to form a painful jagged incision and destroy blood characteristics.

It is therefore an object of the present invention to provide an improved integral lancet unit and package of the foregoing type which can be produced more economically and which can be used more conveniently and safely than previously designed lancets.

It is a further object of the present invention to provide an integral lancet unit which does not require packaging in a separate wrapper in order to insure the sterility thereof for prolonged periods.

It is still a further object of the present invention to provide an improved method of producing an improved integral lancet unit and package in a more economical manner.

Other objects of the present invention will be apparent from the detailed description and the claims to follow when read in conjunction with the accompanying drawing, wherein:

FIG. 1 is a top plan view of the medical lancet unit of the present invention;

FIG. 2 is a side elevational view of the unit shown in FIG. 1;

FIG. 3 is a perspective view of the lancet unit in operative position with the sterile pointed end of the lancet exposed;

FIG. 4 is an end view of the unit shown in FIG. 1;

FIG. 5 is a vertical sectional view taken along the line 5—5 of FIG. 2;

FIG. 6 is a vertical sectional view taken along the line 6—6 of FIG. 2;

FIG. 7 is a vertical sectional view taken along the line 7—7 of FIG. 2;

FIG. 8 is a vertical sectional view taken along the line 8—8 of FIG. 2;

FIG. 9 is a vertical sectional view taken along the line 9—9 of FIG. 2;

FIG. 10 is a side elevation view partially in vertical section of a modified form of medicinal lancet of the present invention;

FIG. 11 is a side elevation view partially in vertical section of still another modified form of medicinal lancet of the present invention;

FIG. 12 is a fragmentary perspective view of lower and upper mold sections forming a mold cavity for molding the lancet unit of FIG. 1; and

FIG. 13 is a vertical sectional view of the lower and upper mold sections of FIG. 12 forming a mold cavity for molding the lancet unit of FIG. 1.

2

The improved medical lancet and container unit of the present invention comprises a lancet retainer section, preferably of a generally cylindrical form, moldably formed about a small diameter cylindrical lancet or pointed rod member to fixedly and protectively hold the lancet in the retainer member with a readily severable cap section integrally formed with the said retainer section so as to sealably and protectively enclose the sterile pointed end of the lancet.

In the preferred embodiment illustration of the present invention shown in FIGS. 1–9 of the drawing, the unitary lancet retaining member and container **10** has a main body section **11** molded directly about a lancet **20** which is comprised of a generally cylindrical rod section **21** provided with a sharply pointed end section **22**. The main body section **11** is generally cylindrical in form with generally cylindrical end sections **12**, **13**. The end section **12**, **13**, are connected by a small diameter axial cylindrical section **14** and a plurality of longitudinal ribs **15** extending radially from the axial cylindrical section **14**. There are preferably four ribs **15** which are spaced angulary at 90°. The ribs **15** facilitate holding the retainer section between the operator's fingers when the lancet **20** is used. Two of the diametrically oppositely disposed ribs **15** have formed intermediate the ends thereof one or more narrow transversely extending slots **16**. The lancet **20** is disposed within the body section **11** with the pointed end section **22** extending a short distance beyond an abutment end wall surface **17** of the body section **11**. The lancet **20** is fixedly held in the body section **11** by having the body of the container molded directly about the rod member **21** which can be notched, roughened or otherwise deformed, if necessary, to provide a secure engagement therewith.

The pointed end section **22** of the lancet **20** can be formed in any manner desired but preferably is provided with one or more sharp cutting edges **23** which will effect bleeding from the capillaries immediately below the surface of the skin for withdrawal of a drop of blood from a patient's finger or ear. One method of providing the desired cutting edges **23** on the end of the rod member **21** is by precision grinding thereon one or more outwardly beveled surfaces which extend axially inwardly about ⅛-inch from the end thereof in the same manner as a point is provided in a hypodermic needle cannula. A precision ground point of the foregoing type on the end of the lancet rod member **21** gives superior blood collecting qualities with less pain and discomfort to the patient. The pointed end section **22** preferably extends outwardly beyond the abutment surface **17** a distance about ⅛ of an inch so that the incision or puncture formed by the lancet will extend into the capillary structure of the patient just below the surface of the skin. The distance the pointed end section **22** projects beyond the abutment surface **17** can be made more or less than the preferred ⅛-inch, if desired, by altering the length of the rod member **21** or the position of the rod member **21**.

The portion of the lancet **20** and the pointed end section **22** which extend beyond the end of the body section **11** are completely sealably enclosed by a unitary cap section **30** formed integrally with the body section **11**

and sealably joined therewith so that the end section **22** and the rod section **21** cannot become contaminated with bacteria or the like before the cap section **30** is removed. The cap section **30** is integrally and sealably joined to the body section **11** by a frangible section **35** which is preferably of a reduced diameter so that the frangible section **35** can be readily fractured and the cap section **30** removed from the end section **11** by applying a twisting or pulling force, as by rotating the cap section **30** relative to the container main body section **11** about the longitudinal axis thereof. In the form shown in the drawing the cap section **30** has circular periphery of a diameter larger than the outer diameter of the main body section **11**. Also, the cap section **30** in the form illustrated in the drawing has a thickness substantially less than its diameter, and thus its oppositely disposed lateral surfaces are generally parallel and present a relatively flat or disc-like form which can be readily held between the ends of the thumb and forefinger when it is desired to rotate the cap member **30** relative to the container body section. It will be apparent from the foregoing description that the lancet retainer and container **10** serves both as an integral support to hold the lancet **20** during use and as a container to protectively and sealably enclose the pointed end section **22** until the lancet is used.

The unitary container **10** is preferably formed of a relatively non-vitreous plastic material which can be readily severed when a rotating force is applied to either the body section **11** or the cap section **30** for exposing the pointed end **22** of the lancet **20** and which preferably does not form sharp cutting edges along the fracture line at the frangible section **35** adjacent the abutment surface **17**. Thus, plasticized organic polymeric compositions, such a polyvinyl chloride, polyethylene, polypropylene and the like plastic materials, are well suited for molding the container **10**.

It should be understood that the unitary container **10** need not form a substantially continuous engagement with the lancet **20** throughout its entire length in order to effect the desired permanent connection. Thus, in the modified form of the invention shown in FIG. 10, the container **10*a*** is similar in exterior form to the container **10** and, like container **10**, container **10*a*** preferably has an overall length of about one inch. However, only a portion of the generally cylindrical body section **11*a*** is formed of solid plastic in direction engagement with the cylindrical rod member or lancet **20*a***, with the remainder of the body section **11*a*** being tubular in form. A small diameter axial sleeve section **25** extending rearwardly from the forward end section **12*a*** of the body section **11*a*** can be provided for frictionally engaging the lancet **20*a*** rather than having a major portion of the body section **11*a*** in the form of a solid cylindrical section as in FIG. 1.

The still further modified form of the invention shown in FIG. 11 is generally similar to the other embodiments illustrating the present invention, and the lancet container unit **10*b*** has an elongated geerally cylidrical body section **11*b*** molded about a portion of the rod-like lancet **20*b*** with two oppositely disposed ribs **15*b*** extending radially from the body section **11*b***, and a cap section **30*b*** integrally connected with the body section **11*b*** by a small diameter frangible section **35*b***. Only about a third of the length of the forward portion of the body section **11*b***, however, is in direction engagement with the lancet **20*b***.

In manufacturing a medical lancet of the present invention each of the lancets **20**, **20*a*** or **20*b*** is preferably comprised of a short section of a cylindrical stainless steel wire, and after being provided with a sharp point, can be cleaned in any desired manner before the lancet container is molded thereabout, such as by injection molding. Sterilization of the pointed end of the lancet **20**, however, is not necessary prior to injection molding, since the elevated temperature of the molten plastic completely sterilizes the point and adjacent surfaces of the lancet, as will be described hereinafter. The completed article of the

present invention, after molding with the sterilized penetrating point completely sealably enclosed, does not require any further sterile packaging to keep the pointed end section in a completely sterile condition indefinitely.

The preferred form of the medical lancet support and container unit illustrated in FIGS. 1–9 of the drawing is preferably made by a novel injection molding process whereby the pointed end section **22** of the lancet **20** is automatically sterilized and positioned relative to the body section **11** of the container **10** by the molten plastic entering the mold cavity. As shown in FIG. 12 of the drawing, the lower mold section **70** has formed therein a plurality of spaced mold cavities **71** each forming the lower half of the lancet support and container unit **10** with the mold cavity gate portion **72** connecting with the outer end of the cap section **73** of the mold cavity. The body section **74** of the mold cavity intermediate the ends thereof has two spaced insert plates **75**, **76** disposed in transverse slots **77**, **78**, respectively, cut in the mold section **70** which extend transversely across each of the mold cavities **71**. Each of the insert plates **75**, **76** has a plurality of transverse grooves **79** cut across the upper edge thereof so as to loosely support between the spaced plates **75**, **76**, axially in each mold cavity **71** a lancet **20**. The lancet **20** has a length somewhat longer than the body section **11** of the container **10**, and the lancet **20** is supported by the spaced insert plates **75**, **76** with the end section **22** pointing toward the gate **72**.

The upper mold section **80** forming the upper half of the lancet container **10**, also shown in FIG. 12, is generally similar in form to the lower mold section **70**. Thus, the mold section **80** has a plurality of mold cavities **81** with the gate portion **82** connecting with the outer end of the cap section **83**. The upper mold section **80** differs from the lower mold section **70** in having mounted transversely therein only one mold insert plate **85** which extends transversely across each of the mold cavities **81** intermediate the ends of the body section **84** thereof. The mold insert plate **85** has transverse grooves **86** formed therein at a point corresponding with the axis of each of the mold cavities **81** so as to provide an axial guide for each of the lancets **20** supported by the insert plates **75**, **76** in the lower mold section **70** when the mold sections **70**, **80** are closed in operative position without, however, the plates **75**, **76**, and **85** tightly engaging the lancet **20**.

When molten plastic material, such a polyethylene or polypropylene, is injected into the mold cavity **87** formed by the mold sections **70**, **80**, as shown in FIG. 13, through the gate **88** formed by the gate portions **72**, **82**, respectively, the hot plastic coming into contact with the beveled pointed end section **22** of the lancet **20** quickly sterilizes the end section **22** and adjacent portions of the lancet **20**. The pressure of the molten plastic material on the pointed end section **22** also tends to force the lancet **20**, which is loosely and slidably supported between the insert plates **75**, **76**, and **85**, into engagement with the rear wall of the mold cavity. Thus, if any of the lancets **20** are not initially accurately positioned within the mold cavity and have their pointed end section **22** extending too far outwardly into the cap section of the mold cavity, these lancets **20** will be automatically accurately positioned by the force of the incoming molten plastic moving the lancet **20** rearwardly until the end thereof engages the rear wall of the mold cavity.

It will be evident from the foregoing description that the preferred method of molding the lancet support and container unit of the present invention avoids the necessity of using individual mold core inserts for each mold cavity and thus markedly simplifies the molding apparatus required and permits a substantial increase in the rate of production compared with the molding apparatus using individual mold core pins for each mold cavity.

The modified forms of the lancet unit invention shown in FIGS. 10 and 11 are readily made by molding ap-

paratus using a conventional mold core pin for each mold cavity, if desired.

Others may practice the invention in any of the numerous ways which are suggested to one skilled in the art by this disclosure, and all such practice of invention are considered to be a part hereof which fall within the scope of the appended claims.

I claim:

1. A medical lancet unit which comprises: a molded lancet retaining member having a main body section adapted to be held between the fingers of an operator and a lancet member having a solid sterile pointed end section fixedly mounted in said retaining member with said sterile pointed end section extending beyond the end of said main body section and having a solid cap section molded integrally with said main body section and sealably embedding and enclosing said sterile pointed end section in the material thereof to prevent bacterial contamination, and said cap section being sealably connected with said main body section by a frangible section which is readily severable to effect separation of said cap section from said body section for exposing said sterile pointed end section immediately before using said lancet.

2. A medical lancet unit for effecting capillary bleeding comprising: a molded lancet retaining member having a plastic main body section adapted to be held between the fingers of an operator and a lancet member having a solid rod section with a sterile pointed end section fixedly disposed in said retaining member with said lancet being disposed in said body section with only said sterile pointed end section extending beyond the forward end of said retaining member and having a removable solid plastic cap section molded integrally with said main body section and sealably embedding and enclosing said sterile pointed end section in the material thereof to prevent bacterial contamination, and said cap section being sealably connected with said main body section by a frangible section which is readily severable to facilitate separation of said cap section from said body section for exposing said sterile pointed end section immediately before use of said lancet.

3. A medical lancet as in claim 2, wherein said cap section has generally parallel axially extending oppositely disposed lateral wall surfaces spaced less than the diameter of said body section which form a relatively flat cap section adapted to being readily held for application of a severing force to effect separation of said cap section from said body section.

4. A medical lancet unit as in claim 2, wherein said main body section has a generally elongated cylindrical form with a substantially transverse end wall surface adjacent said pointed end section to provide an abutment surface at the base of said pointed end section; whereby said end wall surface serves to limit the extent of penetration of said sterile pointed end section and effect only capillary bleeding.

5. A medical lancet unit for effecting capillary bleeding which comprises: a molded plastic lancet retaining member having a generally cylindrical main body section adapted to be held between the fingers of an operator and a solid lancet member having a generally cylindrical rod section with a sterile pointed end section fixedly disposed in said retaining member with only said sterile pointed end section extending beyond the forward end of said main body section and having a removable solid plastic cap section molded integrally with said main body section and connected therewith by a frangible section, and said cap section sealably embedding and enclosing said sterile pointed end section in the material thereof whereby a sterile pointed end section is provided on a lancet without requiring sterilizing of the said lancet.

References Cited

UNITED STATES PATENTS

3,073,307	1/1963	Stevens	206—43 X
3,194,237	7/1965	Rubin	128—253

RICHARD A. GAUDET, *Primary Examiner.*

ROBERT E. MORGAN, *Examiner.*

G. M. McNEILL, *Assistant Examiner.*