UNITED STATES DISTRICT COURT

CENTRAL DISTRICT OF CALIFORNIA

FACET TECHNOLOGIES, LLC, Plaintiff, v. LIFESCAN, INC., Defendant.	Case No. 2:22-cv-01717-MCS (MARx) **ORDER REGARDING LIFESCAN'S MOTION FOR SUMMARY JUDGMENT [ECF NO. 190]**

Plaintiff Facet Technologies, LLC ("Facet") alleges that Defendant LifeScan, Inc. ("LifeScan") infringes U.S. Patent No. 8,840,635 (the "'635 Patent"). *See* Complaint, ECF No. 1; Answer, ECF No. 42; "FAC," ECF No. 93. Facet and LifeScan are both in the blood glucose monitoring business. (FAC at ¶¶ 2–3.) The '635 Patent relates to lancing devices used to obtain blood samples for medical testing purposes.

LifeScan moves for a judgment of invalidity of claims 6, 8, 14, and 18 of the '635 Patent. ("MSJ," ECF No. 190.) With its motion, LifeScan filed a Statement of Uncontroverted Facts and Conclusions of Law, a declaration, and multiple exhibits. ("SUF," ECF No. 190-2; "Griffin Decl.," ECF No. 190-4; "LifeScan's Exs.," ECF Nos. 190-5–190-16.) Facet filed an opposition, three declarations, multiple exhibits, and a Statement of Genuine Disputes of Material Fact in response to LifeScan's SUF.

Facet Technologies, LLC
Exhibit 2121
LifeScan v. Facet
IPR2023-00713
Ex. 2121-001

("Opp'n," ECF No. 197; "Homrig Decl.," ECF No. 197-1; "Collins Decl.," ECF No. 197-4; "Goodrow Decl.," ECF No. 197-7; "Facet's Exs.," ECF Nos. 197-2–197-3 and 197-5–197-6; "GDF," ECF No. 197-8.) LifeScan then filed a reply and a response to Facet's Statement of Genuine Disputes of Material Fact ("Reply," ECF No. 203-1; "Resp. to GDF," ECF No. 203-6.)

The Court held a hearing on July 3, 2023. For the following reasons, LifeScan's MSJ is **DENIED**.

I. BACKGROUND

A. The '635 Patent

The '635 Patent relates to improved lancets and protective sterility caps for covering the sharp tip of the lancet. '635 Patent at 1:17–19 and 1:23–26. Management of certain medical conditions, such as diabetes, may require frequent blood sugar testing. A lancet may be used to obtain a blood sample. *Id*. at 1:23–26. "Lancets typically comprise a sharp metal tip in the form of a needle or blade. The needle or blade is typically embedded in a plastic body that has a size and shape configured for releasable engagement with the receiver or lancet carrier of a lancing device." *Id*. at 1:43–47. "A lancet is typically propelled by [a] drive mechanism from a retracted position shielded within [a] housing to an extended position wherein a sharp tip portion of the lancet projects from the housing to prick [a] subject's skin at a desired lancing site." *Id*. at 1:31–35. A used lancet can then be removed and discarded. *Id*. "The sharp tip of the lancet is commonly embedded in a removable plastic cap to maintain sterility and prevent inadvertent sticks prior to use. The endcap may be replaceable onto the lancet after use to re-cover the sharp lancet tip for safety and hygienic purposes." *Id*. at 1:47–52. Claim 1 of the '635 Patent is representative and discloses:

> 1. A protective sterility cap for a lancet, said sterility cap comprising
> a primary sheath for initial embedment of a sharp lancing tip of an unused lancet therein,
> a secondary sheath for receiving the sharp lancing tip of a used lancet, and

a gripping handle portion extending between the primary sheath and the secondary sheath, with the primary sheath attached at a first end of the gripping handle portion and the secondary sheath attached at a second end of the gripping handle portion when the protective sterility cap is removed from the lancet.

'635 Patent, Claim 1.

B. The Iio Reference

U.S. Patent App. Pub. No. 2005/0131441 to Iio et al. ("Iio") was published on June 16, 2005. Iio generally relates to a lancet having a cylindrical puncture needle cap, a protection slot (for the pre-use needle), and an easy to use a disposal slot (to receive the needle after use). Iio, Abstract. Fig. 6 shows the lancet:

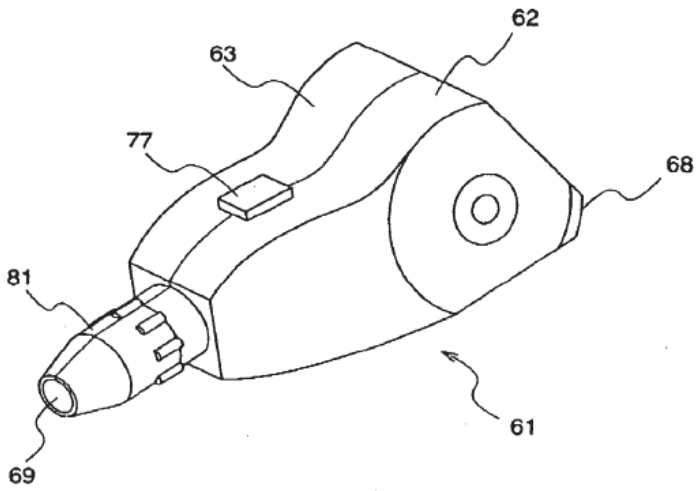

Id., FIG. 6. Iio further discloses that in one embodiment, the "fitting of the puncture needle to the disposal slot is easier than fitting of the puncture needle to the protection slot" to "easily and safely discard a used puncture needle." *Id.* at ¶ [0026]. Iio also teaches that "a thin plastic film" in the puncture needle has "a thickness of 0.1 mm of less." *Id.* at ¶ [0104]. Iio also teaches that "the puncture needle can be easily discarded by making the slot at the discarding side have a larger aperture." *Id.*

II. LEGAL STANDARDS

A. Motion for Summary Judgment

Summary judgment is appropriate where there is no genuine issue of material fact and the moving party is entitled to judgment as a matter of law. Fed. R. Civ. P. 56(a); *Celotex Corp. v. Catrett*, 477 U.S. 317, 330 (1986). A fact is material when, under the governing law, the resolution of that fact might affect the outcome of the case. *Anderson v. Liberty Lobby, Inc.*, 477 U.S. 242, 248 (1986). A dispute is genuine "if the evidence is such that a reasonable jury could return a verdict for the nonmoving party." *Id*. The burden of establishing the absence of a genuine issue of material fact lies with the moving party, *see Celotex*, 477 U.S. at 322–23, and the court must view the facts and draw reasonable inferences in the light most favorable to the nonmoving party, *Scott v. Harris*, 550 U.S. 372, 378 (2007).

To meet its burden, "[t]he moving party may produce evidence negating an essential element of the nonmoving party's case, or, after suitable discovery, the moving party may show that the nonmoving party does not have enough evidence of an essential element of its claim or defense to carry its ultimate burden of persuasion at trial." *Nissan Fire & Marine Ins. Co. v. Fritz Cos.*, 210 F.3d 1099, 1106 (9th Cir. 2000). Once the moving party satisfies its burden, the nonmoving party cannot simply rest on the pleadings or argue "metaphysical doubt" about a material issue of fact precludes summary judgment. *Matsushita Elec. Indus. Co. v. Zenith Radio Corp.*, 475 U.S. 574, 586 (1986). There is no genuine issue for trial where the record taken as a whole could not lead a rational trier of fact to find for the nonmoving party. *Id*. at 587.

B. Invalidity

A patent is presumed valid, and must be proved invalid by clear and convincing evidence. *See Microsoft Corp. v. i4i Ltd. Partnership*, 546 U.S. 91, 95 (2011).

"A patent is invalid for anticipation if a single prior art reference discloses each and every limitation of the claimed invention." *Schering Corp. v. Geneva Pharms., Inc.*, 339 F.3d 1373, 1377 (Fed. Cir. 2003). "[A] prior art reference may anticipate without disclosing a feature of the claimed invention if that missing characteristic is necessarily

present, or inherent, in the single anticipating reference." *Id*. Anticipatory prior art "must be sufficient to enable one with ordinary skill in the art to practice the invention." *Minn. Mining & Mfg. Co. v. Chemque, Inc.*, 303 F.3d 1294, 1301 (Fed. Cir. 2002).

A patent is invalid for obviousness only "if the differences between the subject matter sought to be patented and the prior art are such that the subject matter as a whole would have been obvious at the time the invention was made to a person having ordinary skill in the art to which said subject matter pertains." 35 U.S.C. § 103(a). Whether a patent is invalid as obvious is a question of law based on underlying facts. *TriMed, Inc. v. Stryker Corp.*, 608 F.3d 1333, 1341 (Fed. Cir. 2010) (citations omitted).

III. DISCUSSION

As a threshold matter, the Court declines to consider LifeScan's arguments with respect to the Saikley, Stout, and Peckham references. LifeScan identified these references for the first time in its Supplemental Invalidity Contentions, served February 17, 2023. (ECF No. 172-8.) The Court struck LifeScan's supplemental contentions as untimely. (ECF No. 193.) Accordingly, the Court considers only LifeScan's arguments with respect to the Iio reference.

A. The Parties' Positions

LifeScan argues that Iio teaches each and every limitation of claims 1, 6, 8, 14, and 18. (*See generally*, MSJ.) Facet argues that Iio fails to disclose at least two dimensional limitations of the claims. (Opp'n at 7.) These are "wherein the gripping handle portion defines a lateral span of at least 1.5 times the lancet thickness" as taught by claims 6 and 14, and "wherein the gripping handle portion defines a length at least equal to the lancet thickness," as taught by claims 8 and 18. (*Id*.) In support of its invalidity position, LifeScan cites Iio at FIGS. 8, 9, and 11, ¶¶ [0026] and [0104], claim 20, and the Griffin Decl. ¶¶ 187–92 and 196–97. (MSJ 36–38.)

LifeScan primarily argues that visual comparison of FIGS. 8 and 9 of Iio confirms disclosure of a gripping handle portion having a lateral span of at least 1.5 times the lancet thickness. (*Id*. at 36.) In ¶ [0026] and FIGS. 11(b)-(c), Iio discloses that fitting

the puncture needle to the disposal slot is easier than fitting the puncture needle to the protection slot. (*Id*. at 37.) LifeScan argues this disclosure confirms the dimensions of the components shown in FIGS. 8 and 9. (*Id*.) LifeScan also argues that the size of the user's thumb shown in FIG. 9(a) has a lateral span comparable to the gripping handle but larger than the lancet thickness, which confirms the dimensions of the components. (*Id*.) Finally, LifeScan argues that a person having ordinary skill in the art ("POSA") would understand the lancet thickness and lateral span shown in the figures to be five and twenty times greater, respectively, than the needle separation groove having a thin plastic film of 0.1 mm or less, as taught by ¶ [0104]. (*Id*.)

Facet responds that Iio does not actually disclose dimensions for the structural components shown in the figures and that LifeScan's "visual comparison" argument is improper. (Opp'n 7–8.) In fact, Facet points out that the dimensions of the components shown are not even consistent between figures. (*Id*. at 8.) Facet further argues that there is no way to correlate the disclosed measurement for the thin plastic film to other components shown in the figures. (*Id*. at 9.)

In its reply, LifeScan argues that reliance on the figures is appropriate because the hand shown in FIGs. 6, 9(a)-(c), and 12 acts as a scale for reference.[1] (Reply at 4.) LifeScan further argues that the specification includes references to sizes, for instance at ¶¶ [0102], [0104], claim 20, which support inferring particular sizes from the figures.[2] (*Id*. at 5–7.) Finally, LifeScan argues that it should be allowed to present a single

---

[1] LifeScan also raises arguments regarding the shape of the gripping handle, e.g., cylindrical versus block. (Reply at 2.) However, Facet focused on the dimensional limitations in its opposition and did not discuss the shape of the gripping handle. (*See generally*, Opp'n.)

[2] LifeScan points out the irony of Facet's opposition when Facet itself relies on a figure to support its arguments regarding inventorship of these same limitations. (Reply at 8-9.) However, prior art and inventorship are separate issues and the Court addresses each separately.

reference obviousness challenge with respect to Iio, as it disclosed this ground in its initial contentions. (*Id*. at 10–11.)

B. Analysis

The figures in Iio do not constitute clear and convincing evidence of invalidity under § 102 at least because they do not disclose the dimensional limitations of the '635 Patent. The figures do not include any scale information. Figures without scale information cannot constitute anticipatory prior art for dimensional limitations. *Hockerson-Halberstadt, Inc. v. Avia Grp. Int'l, Inc.*, 222 F.3d 951, 956 (Fed. Cir. 2000) ("Under our precedent, however, it is well established that patent drawings do not define the precise proportions of the elements and may not be relied on to show particular sizes if the specification is completely silent on the issue."); *In re Wright,* 569 F.2d 1124, 1127, 193 USPQ 332, 335 (CCPA 1977) ("Absent any written description in the specification of quantitative values, arguments based on measurement of a drawing are of little value."); *White v. H.J. Heinz Co.*, 640 F. App'x 930, 934–35 (Fed. Cir. 2016); *Nystrom v. TREX Co.*, 424 F.3d 1136, 1149 (Fed. Cir. 2005) ("Under the principles set forth in our prior cases, the speculative modeling premised on unstated assumptions in prior art patent drawings cannot be the basis for challenging the validity of claims reciting specific dimensions not disclosed directly in such prior art.")

Additionally, the portions of the specification that LifeScan cites also do not provide the necessary scale information. For instance, ¶ [0104] explains that the aperture for the disposal slot can be larger than that of the protection slot, but the claim limitations require additional specificity that Iio does not teach. The dimensional limitations specifically require that "the gripping handle portion defines a lateral span of at least 1.5 times the lancet thickness" and that "the gripping handle portion defines a length at least equal to the lancet thickness." The portion of the specification discussing the ease of fitting the used lancet into the disposal relates to the larger aperture and does not disclose any specific dimensional relationship. Iio at ¶ [0026]. The portion discussing the thin plastic film provides a single measurement but does not

disclose any dimensional relationship between components. *Id*. at ¶ [0104].

LifeScan also raises a single reference obviousness argument with respect to Iio for the first time in its reply brief. (Reply at 9–11.) This argument is improper because it deprives Facet of the opportunity to respond. *Bazuaye v. I.N.S.*, 79 F.3d 118, 120 (9th Cir. 1996) ("Issues raised for the first time in the reply brief are waived."). Accordingly, the Court declines to consider LifeScan's § 103 arguments within the context of its summary judgment motion.

For these reasons, the Court **DENIES** LifeScan's motion as to invalidity in view of Iio under §§ 102 and 103.

C. Allegations that Facet Withheld Prior Art

Finally, LifeScan argues that Facet withheld documents describing its own prior art lancets. (MSJ at 41.) The Court will wait for Judge Rocconi's ruling on LifeScan's Motion for Reconsideration of its Motion to Compel (ECF No. 200) and will consider a supplemental argument, if appropriate, at that time.

IV. CONCLUSION

For the reasons stated above, the Court **DENIES** LifeScan's motion.

IT IS SO ORDERED.

Dated: July 27, 2023

MARK C. SCARSI
UNITED STATES DISTRICT JUDGE