US005802316A

United States Patent [19]

Ito et al.

[11] Patent Number: 5,802,316

[45] Date of Patent: Sep. 1, 1998

[54] **ROUTERS CONNECTING LANS THROUGH PUBLIC NETWORK**

[76] Inventors: **Yuji Ito**, c/o NEC Shizuoka, Ltd., 4-2, Shimomata, Kakegawa-shi, Shizuoka; **Minoru Sekine**, c/o NEC Corporation, 7-1, Shiba 5-chome, Minato-ku, Tokyo, both of Japan

[21] Appl. No.: **592,581**

[22] Filed: **Jan. 26, 1996**

[30] **Foreign Application Priority Data**

Jan. 26, 1995 [JP] Japan 7-010505

[51] **Int. Cl.**[6] **H04L 12/28**; H04L 12/66

[52] **U.S. Cl.** **395/200.79**; 395/200.68; 395/200.72; 370/351

[58] **Field of Search** 395/200.01, 200.15, 395/200.16, 200.3, 200.48, 200.72, 200.68, 200.79; 370/351

[56] **References Cited**

U.S. PATENT DOCUMENTS

5,351,237 9/1994 Shinohara et al. 370/392
5,459,719 10/1995 Hayashi 370/236
5,495,480 2/1996 Yoshida 370/389
5,517,620 5/1996 Hashimoto et al. 395/200.15
5,530,963 6/1996 Moore et al. 395/200.73
5,583,996 12/1996 Tsuchiya 395/200.48

Primary Examiner—Alyssa H. Bowler
Assistant Examiner—Walter D. Davis, Jr.
Attorney, Agent, or Firm—Scully, Scott, Murphy & Presser

[57] **ABSTRACT**

A router includes a routing table containing flags each representing a public-network side or a LAN side. A path for a received packet is determined such that the packet is forwarded to the next node through the LAN according to the next node address when the flag corresponding to the specified destination represents the LAN side, and the packet is forwarded to the next node through the public network according to the next node address when the flag represents the public network side. When a change of the routing information sets is monitored, the routing table is searched for the second router having the flag representing the public network side and then the changed routing information sets are transmitted to the second router.

9 Claims, 7 Drawing Sheets

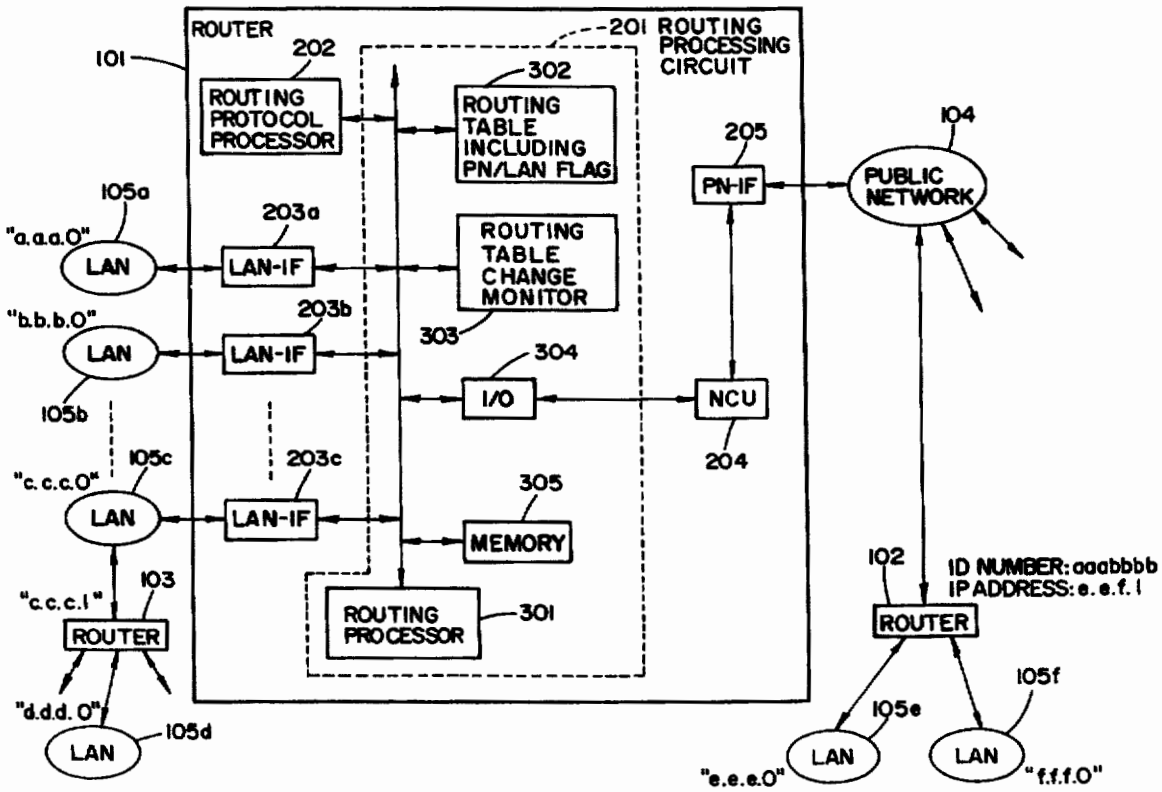

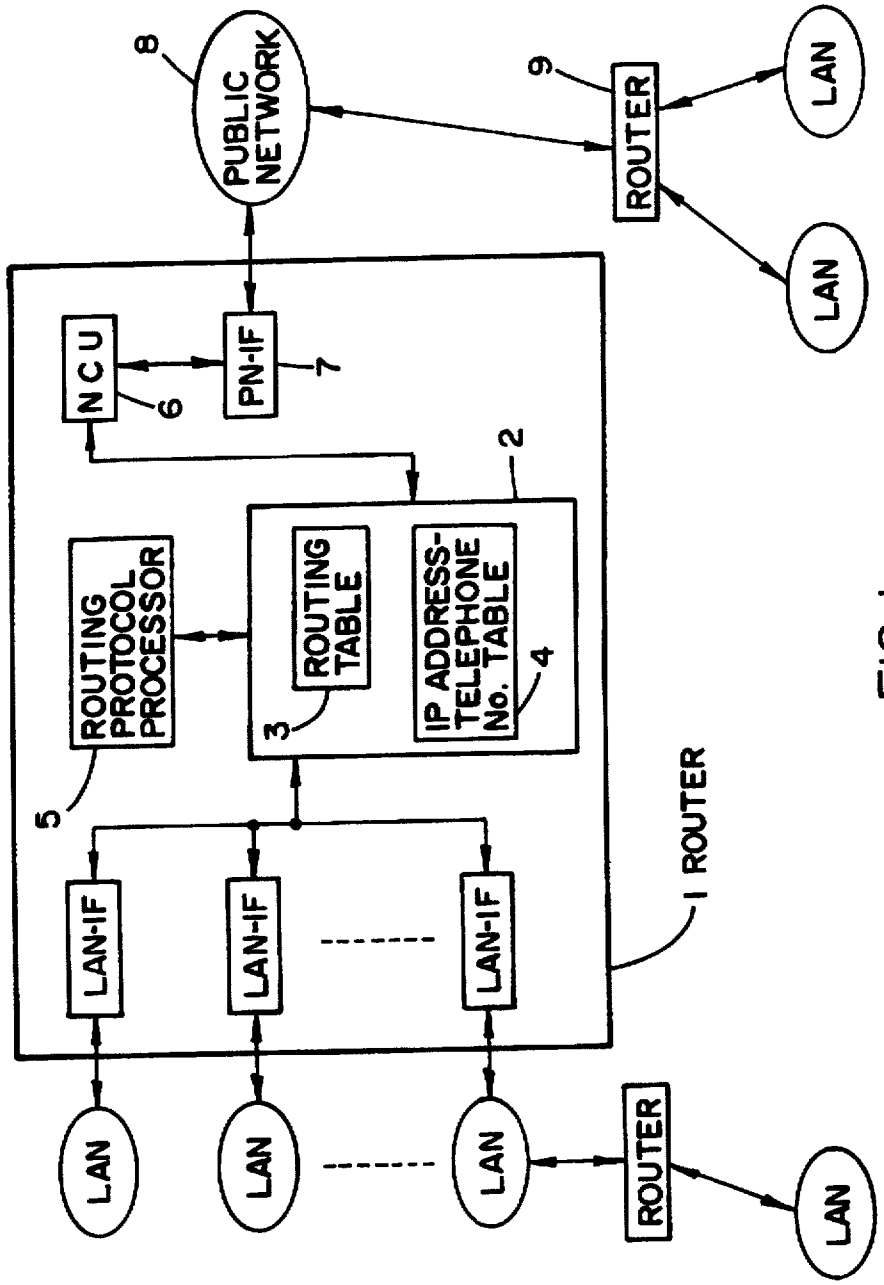

FIG. 1
(PRIOR ART)

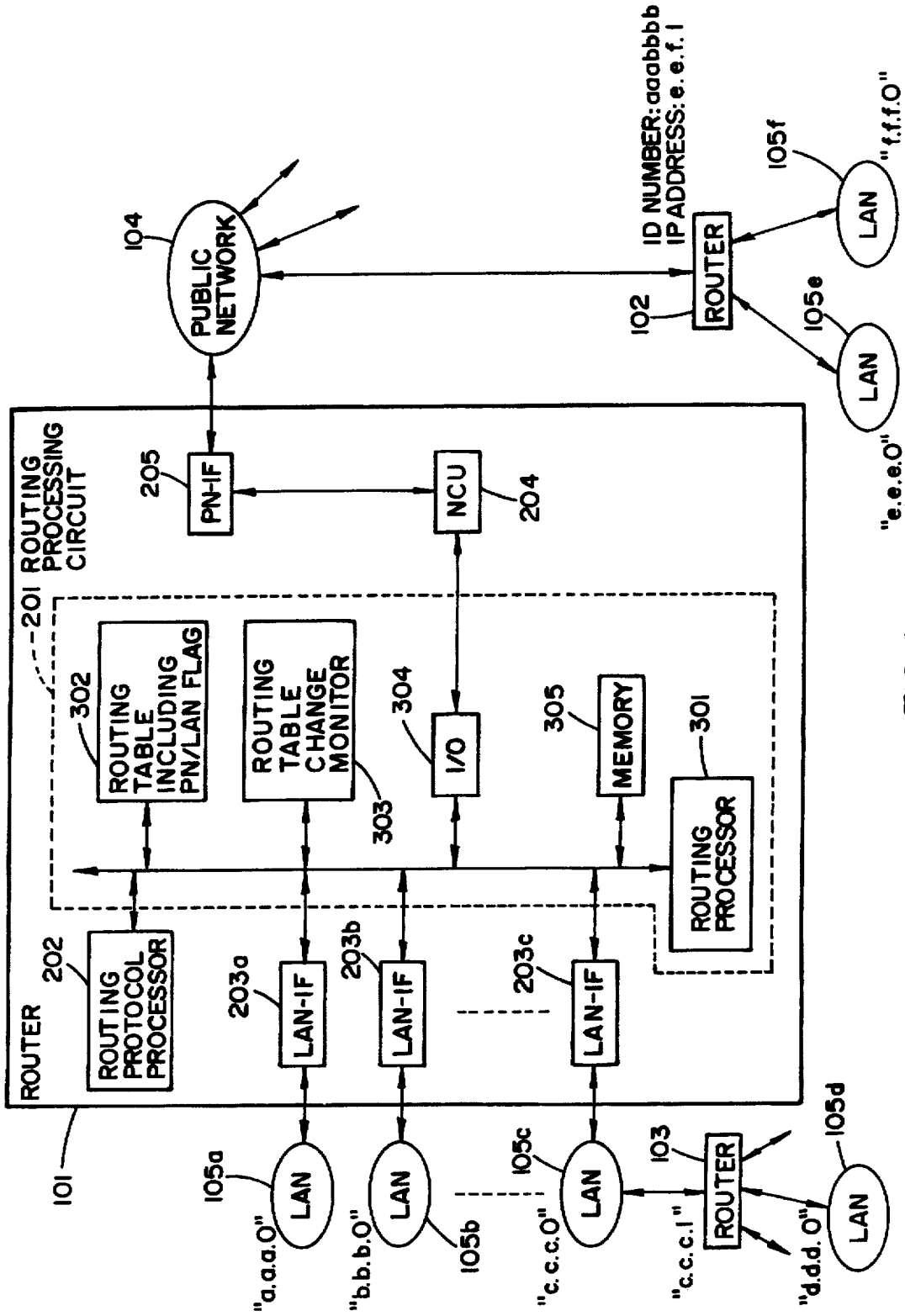
ROUTER
101
ROUTING PROTOCOL PROCESSOR
202
ROUTING PROCESSING CIRCUIT
201
ROUTING TABLE INCLUDING PN/LAN FLAG
302
ROUTING TABLE CHANGE MONITOR
303
I/O
304
MEMORY
305
ROUTING PROCESSOR
301
PN-IF
205
NCU
204
LAN-IF
203a
LAN-IF
203b
LAN-IF
203c
PUBLIC NETWORK
104
ROUTER
102
ROUTER
103
ID NUMBER: aaabbbb
IP ADDRESS: e.e.f.1
LAN
105a
"a.a.a.0"
LAN
105b
"b.b.b.0"
LAN
105c
"c.c.c.0"
"c.c.c.1"
LAN
105d
"d.d.d.0"
LAN
105e
"e.e.e.0"
LAN
105f
"f.f.f.0"

FIG. 2

ROUTING TABLE 302

DESTINATION IP ADDRESS	MASK ADDRESS	NUMBER OF HOPS	NEXT ROUTER ADDRESS	FLAG	NAME OF INTERFACE
a. a. a. 0	ff. ff. ff. 0	—	—		LAN - IF 203a
b. b. b. 0	ff. ff. ff. 0	—	—		LAN - IF 203b
c. c. c. 0	ff. ff. ff. 0	—	—		LAN - IF 203c
d. d. d. 0	ff. ff. ff. 0	1	c. c. c. 1	LAN	LAN - IF 203c
⋮	⋮	⋮	⋮	⋮	⋮
e. e. e. 0	ff. ff. ff. 0	1	aaabbbb	PN	PN - IF 205
f. f. f. 0	ff. ff. ff. 0	1	aaabbbb	PN	PN - IF 205

FIG. 3

DATA COMMUNICATION BETWEEN LANs

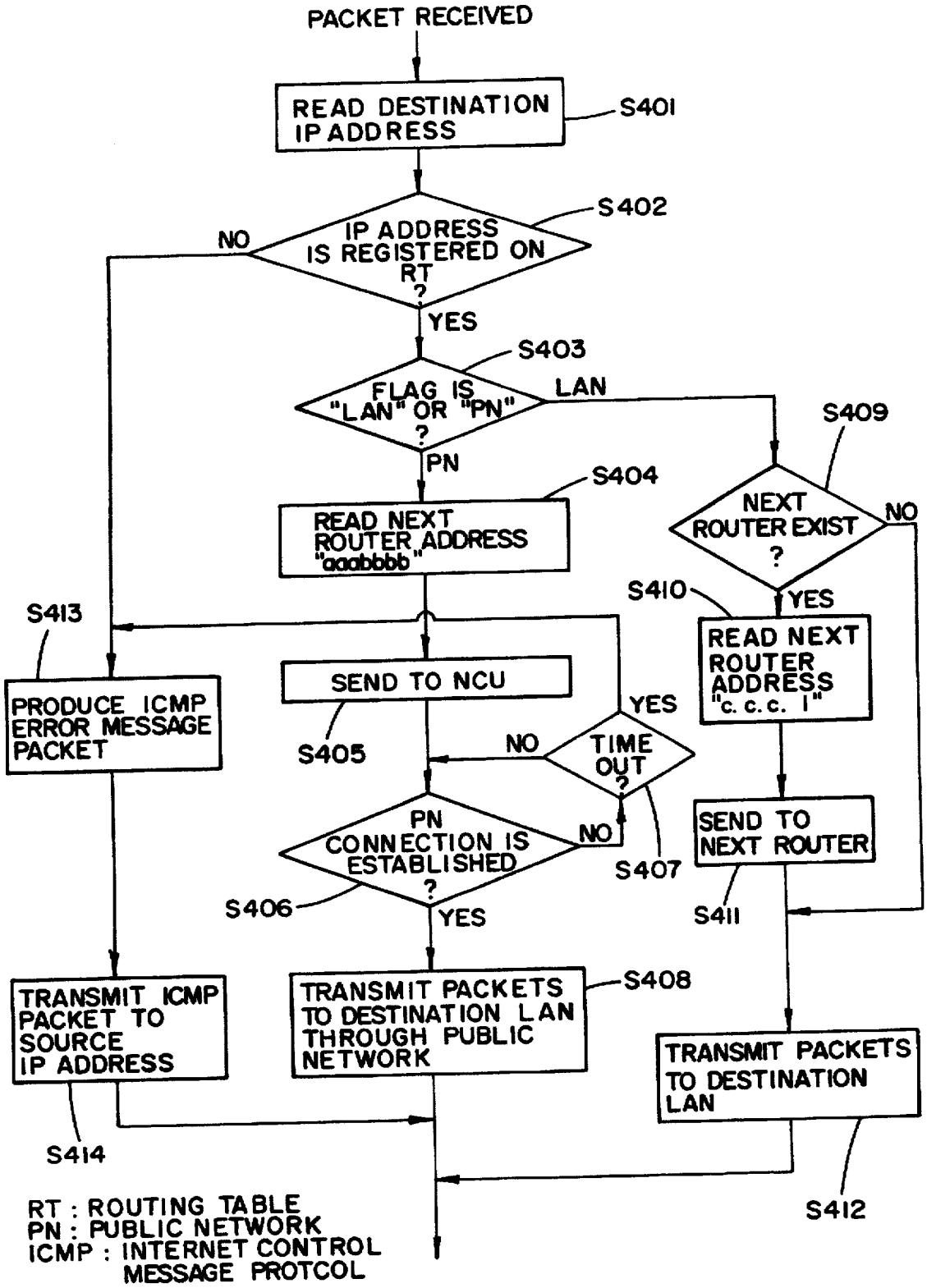

FIG.4

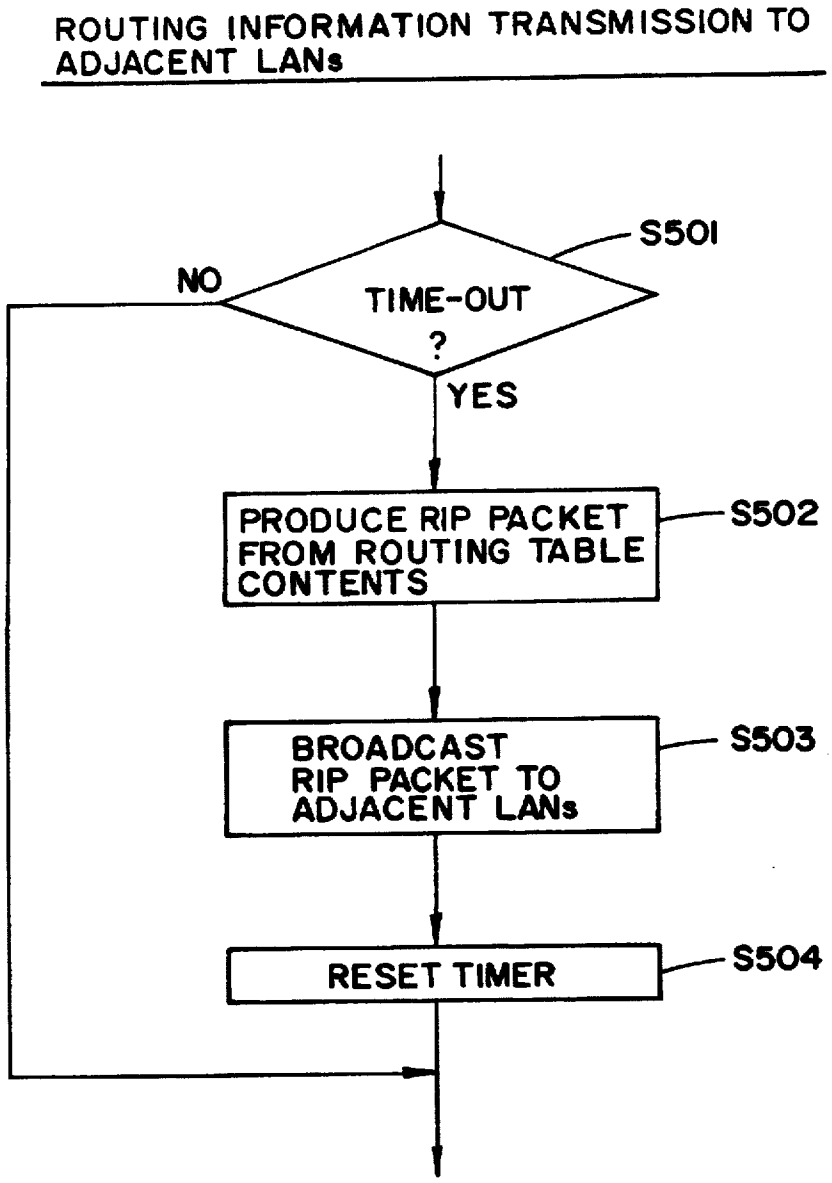
ROUTING INFORMATION TRANSMISSION TO ADJACENT LANs
S501
TIME-OUT ?
NO
YES
PRODUCE RIP PACKET FROM ROUTING TABLE CONTENTS
S502
BROADCAST RIP PACKET TO ADJACENT LANs
S503
RESET TIMER
S504

FIG.5

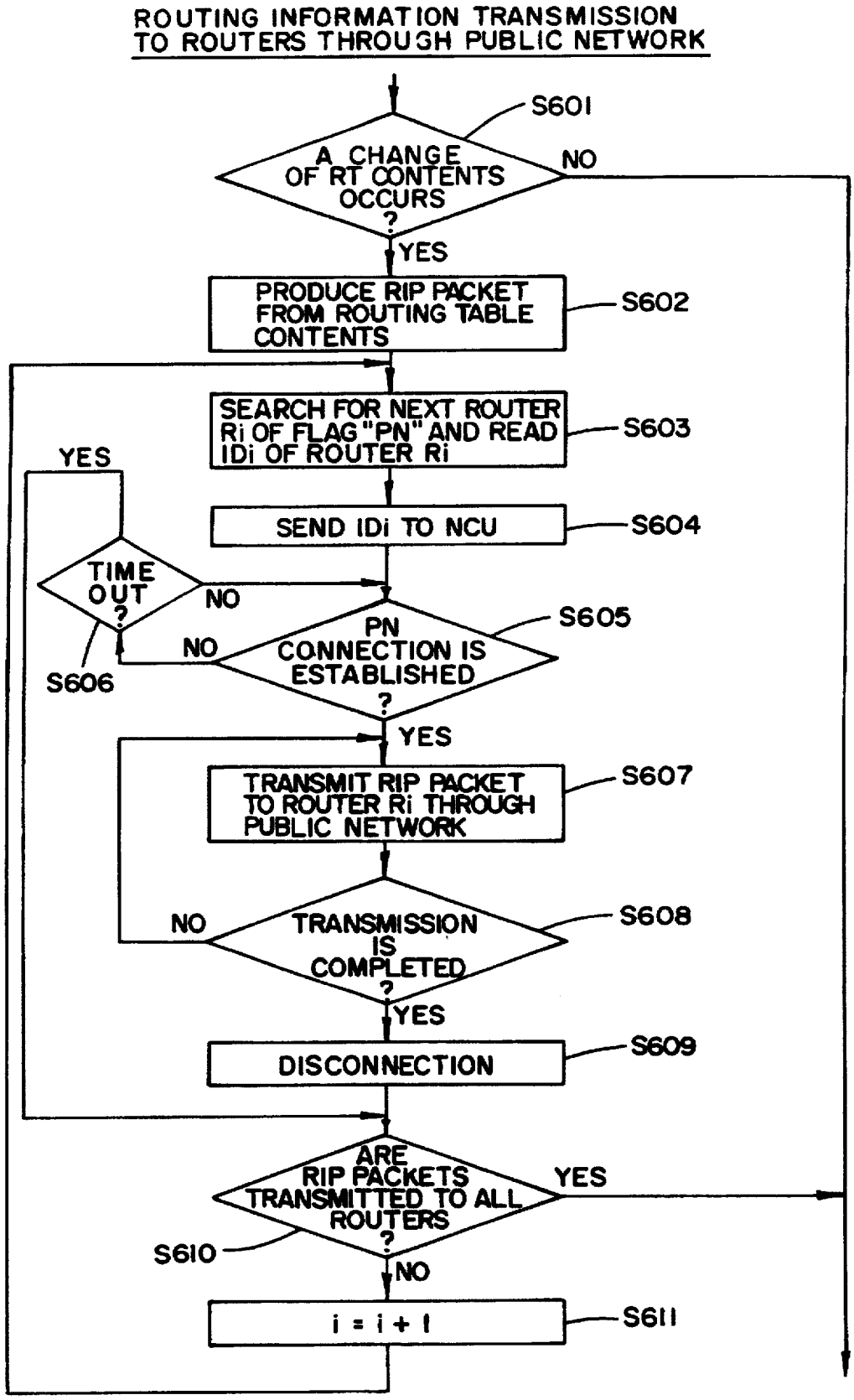
ROUTING INFORMATION TRANSMISSION TO ROUTERS THROUGH PUBLIC NETWORK
S601
A CHANGE OF RT CONTENTS OCCURS ?
NO
YES
PRODUCE RIP PACKET FROM ROUTING TABLE CONTENTS
S602
SEARCH FOR NEXT ROUTER Ri OF FLAG "PN" AND READ IDi OF ROUTER Ri
S603
YES
SEND IDi TO NCU
S604
TIME OUT ?
NO
S606
NO
PN CONNECTION IS ESTABLISHED ?
S605
YES
TRANSMIT RIP PACKET TO ROUTER Ri THROUGH PUBLIC NETWORK
S607
NO
TRANSMISSION IS COMPLETED ?
S608
YES
DISCONNECTION
S609
ARE RIP PACKETS TRANSMITTED TO ALL ROUTERS ?
YES
S610
NO
i = i + 1
S611

FIG.6

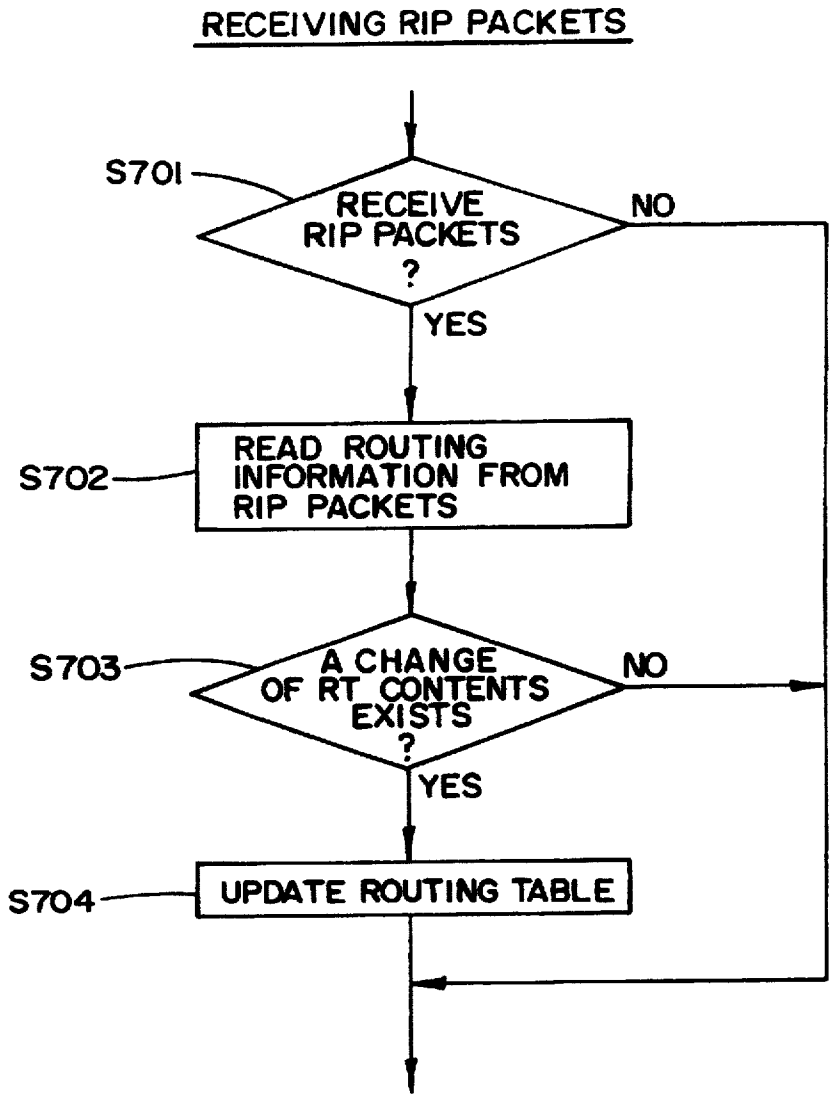
RECEIVING RIP PACKETS
S701
RECEIVE RIP PACKETS ?
NO
YES
S702
READ ROUTING INFORMATION FROM RIP PACKETS
S703
A CHANGE OF RT CONTENTS EXISTS ?
NO
YES
S704
UPDATE ROUTING TABLE

FIG.7

ROUTERS CONNECTING LANS THROUGH PUBLIC NETWORK

BACKGROUND OF THE INVENTION

1. Field of the Invention

The present invention generally relates to a network comprising LANs (local-area networks), and in particular to routers which transfer packets between LANs through a public network.

2. Description of the Related Art

Generally, a router receives a packet from a node of a network or another router and passes this packet on to a destination specified in an embedded packet. Especially, a router which connects several LANs with a public network has to be provided with a routing table as well as another table containing the relationship between IP (Internet Protocol) addresses and public telephone numbers.

Referring to FIG. 1, such a router **1** is comprised of a routing processor **2** including the routing table **3** and the IP address-to-public telephone number relationship table **4**, and further a routing protocol processor **5**, a network control unit **6** and a public network interface **7**. The public network interface **7** is connected to a public network **8** which is in turn connected to another router **9** having the same circuit configuration as the router **1**. The routing table **3** generally has a predetermined fields consisting of destination IP address, mask address, number of hops, next router IP address, and interface name. The table **4** consists of two fields: next router IP address and public telephone number.

When receiving a packet from a LAN through the corresponding LAN interface, the routing processor **2** searches the routing table **3** for the destination IP address embedded in the received packet and reads the next router IP address of the router **9** corresponding to the destination IP address from the routing table **3**. Subsequently, the routing processor **2** finds the public telephone number of the next router **9** by searching the IP address-to-public telephone number relationship table **4** for the next router IP address. Using this public telephone number of the next router **9**, the routing processor **2** performs the line connection to the router **9** through the public network **8**.

However, the conventional LAN router finds the IP address of the next router **9** from the routing table **3** and then uses this IP address of the next router **9** to search the IP address-to-public telephone number relationship table **4** for the corresponding telephone number. Therefore, the routing processor **2** needs not only double IP addresses but two searching operations of the tables **3** and **4**, respectively, before transmitting a connection request to the public network. This is an obstacle to reduction in the time required for routing operations.

Furthermore, the conventional router periodically transmits routing information packets to the LANs connected through the public network, rising a problem of the increased connection charge of the public network.

SUMMARY OF THE INVENTION

An object of the present invention is to provide a router and routing method which achieve reductions in the time required for routing operations.

Another object of the present invention is to provide a router and routing information updating method which achieve reductions in connection charges through a public network.

A router according to the present invention is comprised of a routing table which contains flags each representing public-network or LAN in addition to well-known routing information. More specifically, the routing table contains a plurality of routing information sets corresponding to destinations, respectively. Each of the routing information sets includes the flag representing which side the destination is directed to, a LAN side or a public network side.

According to an aspect of the present invention, a path for a received packet is determined based on a specified destination of said packet as follows. When the flag corresponding to the specified destination represents the LAN side, the packet is forwarded to the next node through the LAN according to the next node address corresponding to the specified destination. On the other hand, when the flag represents the public network side, the packet is forwarded to the next node through the public network according to the next node address. In addition, when the LAN is the specified destination of the packet, the path for the received packet is determined such that the packet is forwarded to the LAN.

According to another aspect of the present invention, a change of the routing information sets is monitored at predetermined intervals. When the change of the routing information sets is monitored, the routing table is searched for the second router having the flag representing the public network side and then the changed routing information sets are transmitted to the second router. In addition, the routing information sets are periodically transmitted to the adjacent LANs connected to the router.

BRIEF DESCRIPTION OF THE DRAWINGS

FIG. **1** is a block diagram showing the circuit configuration of a conventional LAN router;

FIG. **2** is a block diagram showing the circuit configuration of a LAN router according to an embodiment of the present invention;

FIG. **3** is a schematic diagram showing contents of a routing table employed in the embodiment;

FIG. **4** is a flowchart showing an operation of the embodiment in data communication between LANs;

FIG. **5** is a flowchart showing an operation of the embodiment in routing information transmission to adjacent LANs;

FIG. **6** is a flowchart showing an operation of the embodiment in routing information transmission to routers through the public network; and

FIG. **7** is a flowchart showing an operation of the embodiment in RIP packet reception.

DETAILED DESCRIPTION OF THE PREFERRED EMBODIMENTS

As illustrated in FIG. **2**, it is assumed for simplicity that a network is comprised of routers **101–103**, a public network **104**, and a plurality of LANs **105*a*–105*f***. The router **101** can be connected to the router **102** through the public network **104** so as to transfer packets between one of LANs **105*a*–105*c*** and one of LANs **105*e*** and **105*f***. Similarly the router **103** transfers packets between the LAN **105*c*** and the LAN **105*d***. Further, it is assumed that the LANs **105*a*–105*f*** are previously provided with IP addresses "a.a.a.0", "b.b.b.0", "c.c.c.0", "d.d.d.0", "e.e.e.0", and "f.f.f.0", respectively, the router **102** with both IP address "e.e.f.1" and public ID number "aaabbbb", and the router **103** with IP address "c.c.c.1".

The respective routers **101–103** basically have the same circuit configuration as described hereinafter. Taking the router **101** as an example, it is comprised of a routing

processing circuit **201**, a routing protocol processor **202**, LAN interface circuits (LAN-IFS) **203a–203c**, a network control unit (NCU) **204**, and a public network interface circuit (PN-IF) **205**. The routing processing circuit **201** is connected to the LANs **105a–105c** through the respective LAN interface circuits **203a–203c** and is also connected to the public network **104** through the NCU **204** and the PK-IF **205**.

The routing processing circuit **201** is comprised of a routing processor **301**, a routing table **302**, a routing table change monitor **303**, an input/output controller **304**, and other necessary circuits such as a memory **305** and a timer. The routing processor **301** performs routing operations according to the routing protocol. As described in detail later, the routing processor **301**, referring to the routing table **302**, finds a path for a packet received from the public network **104** or one of LANs **105a–105c**. The routing information stored in the routing table **302** is periodically transmitted to the respective nodes of LANs **105a–105c** which are directly connected to the router **101**. Each node of the LANs **105a–105c** having received the routing information from the router **101** updates its routing table using the received routing information. Furthermore, the routing table change monitor **303** monitors a change of the routing information. When the routing table **302** is changed, the change information is sent to the routing processor **301** which transmits the routing information to the router **102** through the public network **104**. The router **102** updates its routing table using the routing information received from the router **101**.

The routing table **302** according to the present embodiment has predetermined fields: destination IP address, mask address, number of hops, next router address, PN/LAN flag, and name of interface. As known well, the routing table **302** contains paths and distances between routers. Respective paths are represented by the destination IP address, the next router address, the PN/LAN flag, and the name of interface. Respective distances are represented by the number of hops.

For example, in cases where the destination of a received packet is the LAN **105a** having the IP address "a.a.a.0", since the LAN **105a** is directly connected to the router **101**, the routing processor **301** selects the LAN-IF **203a** by referring to the "name of interface" field in the routing table **302** and then transfers the packet to the LAN **105a** directly. As another example, in cases where the destination of a received packet is the LAN **105d** having the IP address "d.d.d.0", since the LAN **105d** is connected to the router **101** through the LAN **105c** and the router **103** (that is, the number of hops is "1", the next router address is "c.c.c.1", and the PM/LAN flag is "LAN"), the routing processor **301** selects the LAN-IF **203c** referring to the "name of interface" field in the routing table **302** and then transfers the packet to the LAN **105c** which in turn transfers it to the router **103**. The router **103** transfers it to the ultimate destination LAN **105d** in the same manner as the router **101**. As still another example, in cases where the destination of a received packet is the LAN **105e** having the IP address "e.e.e.0", since the LAN **105e** is connected to the router **101** through the public network **104** and the router **102** (that is, the number of hops is "1", the next router address is "aaabbbb", and the PN/LAN flag is "PN"), the routing processor **301** selects the PN-IF **205** referring to the "name of interface" field in the routing table **302** and then transfers the packet to the router **102** through the public network **104**. The router **102** transfers the packet to the ultimate destination LAN **105e** in the same manner as the router **101**.

More detailed operations of the router will be described hereinafter referring to flowcharts.

DATA COMMUNICATION BETWEEN LANs

Referring to FIG. **4**, when receiving a packet from a LAN (here LAN **105a**), the LAN-IF **203a** performs the MAC (media access control) processing of the received packet and then sends it to the routing processing circuit **201**. In the routing processing circuit **201**, the routing processor **301** reads the destination IP address from the header of the received packet (S401) and then searches the routing table **302** to check whether the destination IP address is registered on the routing table **302** (S402). If it is registered (Yes of S402), then it is checked whether the PN/LAN flag corresponding to the destination IP address in the routing table **302** indicates "LMN " or "PN" (S403).

If the PN/LAN flag Indicates "PN", the routing processor **301** reads the next router address (here "aaabbbb") from the routing table **302** (S404) and then sends it to the NCU **204** which performs the well-known connection operation to the router **102** through the public network **104** (S405). If the public network connection between the routers **101** and **102** is established before time-out occurring (S406 and S407), the routing processor **301** transfers the packet to the router **102** through the public network **104** (S408) and then the router **102** transfers it to the ultimate destination LAN according to the destination IP address embedded in the header of the packet.

If the PN/LAN flag indicates "LAN", the routing processor **301** refers to the "number of hops" and the "next router address" of the routing table **302** to check whether a next router exists or not (S409). When the next router exists (Yes in S409), the routing processor **301** reads the next router IP address (here "c.c.c.1") from the routing table **302** (S410) and then sends the packet to the router **103** (S411). After that, data packets are transmitted to the ultimate destination LAN **105d** (S412). In cases where the packet is of TCP (transmission control protocol), the LAN connection is established before the data packets are transmitted to the ultimate destination LAN **105d**.

If the destination IP address of the packet is not registered on the routing table **302** (No of S402) or the time-out occurs (Yes of S407), the routing processor **301** produces an ICMP (internet control message protocol) error message packet (S413) and then transmits it to the source LAN **105a** (S414).

ROUTING INFORMATION TRANSMISSION

As shown in FIGS. **5–7**, the present embodiment performs the dynamic routing. Referring to FIG. **5**, the routing information is transmitted from the router **101** to the adjacent LANs **105a–105c** in a predetermined period. When the timer runout occurs (Yes of S501), the routing processor **301** produces RIP (routing information protocol) packets from the routing information stored in the routing table **302** (S502) and then broadcasts the RIP packets to the adjacent LANs **105a–105c** through the LAN-IFs **203a–203c**, respectively. After that, the timer is reset for the predetermined time period (S504).

Referring to FIG. **6**, when the routing information of the routing table **302** is changed, the relevant router transmits the changed routing information to the routers which are connected to the relevant router through the public network **104**. As described before, the routing table change monitor **303** monitors the routing table **302**. When receiving a change detection signal of the routing information from the routing table change monitor **303** (Yes of S601), the routing processor **301** produces RIP packets from the contents of the routing table **302** according to the Routing Information Protocol (S602).

After initializing a variable i, the routing processor **301** searches the routing table **302** for a first "next router" R_i having a flag of PN and reads out its public ID number ID_i from the "next router address" field of the routing table **302** (S**603**). The public ID number ID_i is send to the NCU **204** which performs the connection operation through the public network **104** until the time-out occurs (S**604**–S**606**). When the public connection is established (yes of S**606**), the routing processor **301** transmits a RIP packet to the router R_i through the public network **104** until all the RIP packets are completely transmitted (S**607** and S**608**). When the RIP packets transmission to the router R_i is completed (Yes of S**608**), the public line is disconnected (S**609**) and then it is checked whether the RIP packets are transmitted to all the routers R_i (S**610**). If not, the variable i is incremented by one (S**611**) so that the above steps (S**603**–S**609**) are repeated regarding the router R_{i+i}. In this manner, the above steps (S**603**–S**611**) are repeated until the RIP packets conveying the changed routing information are transmitted to all the routers which corresponds to the respective next routers with a flag of PN registered in the routing table **302** (Yes of S**610**).

ROUTING INFORMATION RECEPTION

Referring to FIG. **7**, when receiving the RIP packets from the LANs **105***a*–**105***c* or the public network **104** (Yes of S**701**), the routing processor **301** reads the routing information from the received RIP packets (S**702**) and then checks whether there is any difference between the received routing information and the contents of the routing table **302** (S**703**). If a change of the routing table contents exists (Yes of S**703**), the routing processor **301** updates the routing table **302** using the received routing information (S**704**).

What is claimed is:

1. A router for connecting a local-area network (LAN) with a public network comprising:

a first interface for transmitting and receiving packets to and from a plurality of LANs;

a second interface for transmitting and receiving packets to and from said public network;

a routing table containing a plurality of routing information sets corresponding to destinations, respectively, each of said routing information sets including a next node address and a flag, said next node address indicating a second router following said router in a route from said router to a destination through one of said LAN and said public network, and said flag representing one of a LAN side and a public network side; and

a routing processor for searching said routing table for said second router when a change of said routing information sets is monitored and for determining a path for a packet received from one of said LAN and said public network based on a specified destination of said packet such that said packet is forwarded to said second router through said LAN according to said next node address corresponding to said specified destination when said flag corresponding to said specified destination represents said LAN side and said packet is forwarded to said second router through said public network according to said next node address corresponding to said specified destination when said flag corresponding to said specified destination represents said public network side.

2. The router according to claim **1**, wherein said routing processor determines said path such that said packet is forwarded to said LAN when said LAN is said specified destination of said packet.

3. A network comprising:

a public network;

a plurality of local-area networks (LANs); and

a plurality of nodes including routers each connecting a LAN with said public network;

each of said routers comprising:

a first interface for transmitting and receiving packets to and from a plurality of LANs;

a second interface for transmitting and receiving packets to and from said public network;

a routing table containing a plurality of routing information sets corresponding to destinations, respectively, each of said routing information sets including a next node address and a flag, said next node address being one of an IP address and a public identification number which indicates a second router following a router in a route from said router to a destination through one of said LAN and said public network, and said flag representing one of a LAN side and a public network side; and

a routing processor for searching said routing table for said second router when a change of said routing information sets is monitored and for determining a path for a packet received from one of said LAN and said public network based on a specified destination of said packet such that said packet is forwarded to said second router through said LAN according to said IP address of said second router corresponding to said specified destination when said flag corresponding to said specified destination represents said LAN side and said packet is forwarded to said second router through said public network according to the public identification number of said second router corresponding to said specified destination when said flag corresponding to said specified destination represents said public network side.

4. A network comprising:

a public network;

a plurality of local-area networks (LANs); and

a plurality of nodes including routers each connecting a LAN with said public network;

each of said routers comprising:

a first interface for transmitting and receiving packets to and from a plurality of LANs;

a second interface for transmitting and receiving packets to and from said public network;

a routing table containing a plurality of routing information sets corresponding to destinations, respectively, each of said routing information sets including a next router address and a flag, said next router address indicating a second router following a router in a route from said router to a destination through one of said LAN and said public network, and said flag representing one of a LAN side and a public network side;

a monitor for monitoring a change of said routing information sets; and

a routing processor for searching said routing table for said second router associated with said flag representing said public network when said change of said routing information sets is monitored so as to transmit said routing information sets changed to said second router.

5. The network according to claim **4**, wherein said routing processor periodically transmits said routing information sets to said LANS connected through said first interface.

6. A method for updating routing information in a router for connecting a local-area network (LAN) with a public network, said method comprising the steps of:

storing a plurality of-routing information sets in a routing table, said routing information sets corresponding to destinations, respectively, each of said routing information sets including a next router address and a flag, said next router address indicating a second router following said router in a route from said router to a destination through one of said LAN and said public network, and said flag representing one of a LAN side and a public network side;

monitoring a change of said routing information sets;

searching said routing table for said second router associated with said flag representing said public network when said change of said routing information sets is monitored; and

transmitting said routing information sets changed to said second router.

7. The method according to claim 6 further comprising the steps of:

searching said routing table for a specified destination embedded in a received packet;

checking whether said flag of a routing information set corresponding to said specified destination represents said LAN side or said public network side;

determining a path for said received packet such that said packet is forwarded to said next router through said LAN according to said next router address corresponding to said specified destination when said flag represents said LAN side; and

determining a path for said received packet such that said packet is forwarded to said next router through said public network according to said next router address corresponding to said specified destination when said flag represents said public network side.

8. The method according to claim 7, further comprising the step of:

determining a path for said received packet such that said packet is forwarded to said LAN when said LAN is said specified destination of said packet.

9. The method according to claim 6, further comprising the step of:

periodically transmitting said routing information sets to said LANs connected to said router.

* * * * *

UNITED STATES PATENT AND TRADEMARK OFFICE

CERTIFICATE OF CORRECTION

PATENT NO. : **5,802,316**

DATED : **September 1, 1998**

INVENTOR(S) : **Yuji Ito, et al.**

It is certified that error appears in the above-identified patent and that said Letters Patent is hereby corrected as shown below:

Column 4, Line 15: "Indicates" should read --indicates--

Column 6, Line 15, Claim 3: "IP address" should read --IP (Internet Protocol) address--

Column 7, Line 4, Claim 6: "of-routing" should read --of routing--

Signed and Sealed this

Nineteenth Day of September, 2000

Attest:

Q. TODD DICKINSON

Attesting Officer

Director of Patents and Trademarks