© 2001 IMAGESTATE

BY PAUL I-HAI LIN &
HAROLD L. BROBERG

Internet-Based Monitoring and Controls for HVAC APPLICATIONS

Remote control of HVAC APPLICATIONS allows for BETTER CONTROL and ENERGY UTILIZATION

SIGNIFICANT ADVANCES in Internet and computer technology have made it possible to develop an Internet-based control, monitoring, and operation scheduling system for heating, ventilation, and air-conditioning (HVAC) systems. The proposed system architecture includes such features as control, measurement, networking, and reporting. This article addresses issues in architecture selection, electronics, embedded processors and software, and Internet technologies. This article also proposes an Internet-based HVAC system architecture that combines Web technology, networking, and functions of direct digital control. The proposed system also includes technologies needed for supporting real-time digital thermostat control, data gathering, remote access and occupancy control, light sensing control, and views of the history of HVAC utilization. This system enables users to make cost-effective energy decisions and quickly identify trouble spots of HVAC systems to minimize system down time.

1077-2618/02/$17.00©2002 IEEE

Authorized licensed use limited to: Rich Pravata. Downloaded on March 09,2023 at 18:56:12 UTC from IEEE Xplore. Restrictions apply.

LENNOX EXHIBIT 1037

Lennox Industries Inc. v. Rosen Technologies LLC, IPR2023-00715, Page 1

Introduction

Recently, energy efficient HVAC technology has received nationwide attention because of growing energy demands and limited resources [1]-[12]. As reported in [1], heating and air conditioning account for about 44% of home energy use in the United States. Additional efficient control methods, such as automatic and programmable thermostats and zone heating and cooling, are also recommended for use to reduce energy expense.

Air-conditioning and Refrigeration Technology Institute (ARTI) 21 Century has reported research projects focusing on the system-integration approach to maximize HVAC energy efficiency [5], [6]. Direct digital control systems (DDC) for building automation and HVAC systems typically perform data acquisition, monitor alarms, provide exception reporting, automate controls, and produce reports. However, DDC systems do not directly support Internet and Web control applications. It was recommended in [13] that the automated building industry pay attention to the following issues: Internet/Intranet backbone and standard TCP/IP protocol interfaces, and the convergence of building automation and information systems (IS) services. This would enable national, or even global, multibuilding management.

The availability of fast, affordable embedded computers and PCs has driven the general demands for high-speed Internet data links and computer-based monitoring and control features of HVAC systems for better control and energy utilization. Portable Web devices, such as PDAs and cell phones, can also be used for user interface to access Internet-based HVAC systems.

FAST, AFFORDABLE EMBEDDED COMPUTERS AND PCS HAVE DRIVEN THE DEMAND FOR HIGH-SPEED INTERNET DATA LINKS AND COMPUTER-BASED MONITORING AND CONTROL FEATURES.

Internet-Based Monitoring and Controls Architecture

The design of energy-efficient Internet-based HVAC control and monitoring should consider all aspects of the system, including communications, sensors, actuators, instrumentation, and controls. Internet-based HVAC monitoring and control systems should be designed to include a simple Web browser, appliance networking and control, and appliance operation monitoring and scheduling systems. These systems can potentially help users control cost, quality, and reliability of their ventilation, heating, and cooling systems.

The architecture of the proposed system (Fig. 1) is based on a client/server model and consists of the following major modules: sensors and actuators, data acquisition and signal conditioning, input/output (I/O) links, networking interface, common gateway interface (CGI)-accessed control programs, a Web server, and a database. TCP/IP and the Web are the technologies by which a HVAC system can be efficiently controlled and monitored any time, any place.

Our goals with the proposed Internet-based HVAC system architecture are to

- combine the functions of control, programming, operator interface, data collection and analysis, and management
- allow the use of off-the-shelf programming languages and tools for developing HVAC control and power management programs (C/C++, Visual Basic, Java, etc.)
- provide real-time capability.

Assume that a Web server, HTML documents, control pages for services and operation, and related HVAC-control programs are already developed and installed. Then basic operation of this Internet-based HVAC system (Fig. 2) is as follows:

- A user logs on to a PC and dials an Internet service provider or uses a Web browser to logon to the Web server if the PC is already connected to an enterprise or campus network.
- A login page is sent to the user for authentication the user account and password.
- The user receives a main control Web page that contains forms to show all supported access activities.

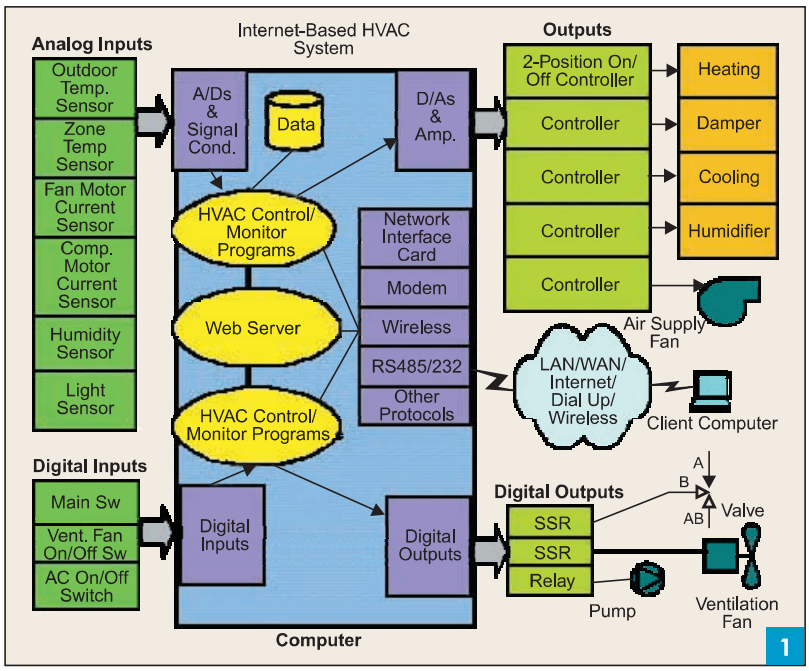

Architecture of the proposed Internet-based HVAC control system.

Authorized licensed use limited to: Rich Pravata. Downloaded on March 09,2023 at 18:56:12 UTC from IEEE Xplore. Restrictions apply.
LENNOX EXHIBIT 1037
Lennox Industries Inc. v. Rosen Technologies LLC, IPR2023-00715, Page 2

- The user selects needed operations and setup values, then submits the form back to the Web server.
- The Web server receives the requested information and calls appropriate CGI programs (C/C++, Visual Basic, Java, etc.) to perform the requested tasks.
- Finally, the status of the system operation is reported back to the user.

ENERGY LOSSES ARISING FROM VENTILATION AND AIR MOVEMENT ARE PREDICTED TO BECOME THE DOMINANT CAUSE OF HEATING AND COOLING LOSS IN BUILDINGS DURING THE NEXT CENTURY.

Internet-Based Monitoring and Controls Design

Once the control problem has been defined, the selection of the sensors, I/O devices, computer hardware/software, and networking devices and connections can be determined. There are ten basic building blocks that may be applied to Internet-based HVAC monitoring and controls:

- Develop detailed HVAC load operating specifications.
- Develop an operational timing diagram of the HVAC operation to be controlled.
- Determine the real-time needs of the operation in order to meet the logic, software, networking, and hardware platform requirements.
- Select I/O sensors for the HVAC control and monitoring interface.
- Design a local operator interface and control circuit.
- Determine the control parameters to aid in the control of the program.
- Determine and install Web servers.
- Design Web pages for appliance control and monitoring.
- Use CGI programming for appliance control and monitoring.
- View and test the desired system.

General Considerations

A list of design issues have been drawn up

- *Web server and HVAC controller:* PC (Web server, appliances controller) or embedded computer with TCP/IP protocols
- *Internet connection:* wireless, modem, cable modem, asynchronous digital subscriber line, or partial-T1 network
- *local device networking:* local area network (TCP/IP based), RS485 device networking, radio frequency wireless networking
- *communication protocol:* serial (dial up), TCP/IP Winsocket connection, Web connection through http, and/or e-mail for sending alert
- *Web-page user interface:* icon for shutting down the HVAC system, icons for on/off controls, icons for utilization controls, icons for AC temperature control, text box input for temperature value setup
- *CGI programs:*
  - user login authentication, communication port configuration
  - data acquisition and measurement, on/off control, motor speed control, temperature control, scheduling control
  - procedures for monitoring and evaluating loads, fault monitoring and reporting; operation scheduling (according to time, date, and season).

Processor Selection

The computers considered should be able to support such popular operating systems as Linux, Windows, and related software products. In addition, FLASH memory options, as well as modem, Ethernet, and serial communications that allow the same platform to be used in many applications, should be considered as important factors. Off-the-shelf all-in-one computer boards designed with flexible processor and RAM configurations and an array of peripherals, including video interface, Ethernet, HD, FlashDrive, floppy and two PC card slots combined with a custom specific assembly service are recommended. They should also provide optimized price over performance for a variety of original equipment manufacturer (OEM) applications.

Data Acquisition, Digital I/O Interface, and Signal Conditioning

Sensors for HVAC monitoring and control may include temperature sensors, current measurements for fan motors, humidity, and light sensors. Data acquisition boards containing analog/digital converters (A/Ds), digital/analog converters (D/As), digital I/Os, and signal condition modules are required.

D/As are used to produce appropriate analog values for digital controllers to control actuators such as valves, fan motors, variable-speed drives, pumps, and humidifiers. Controllers which may be implemented as proportional (P) and proportional-integral (PI) control reside on a PC or an

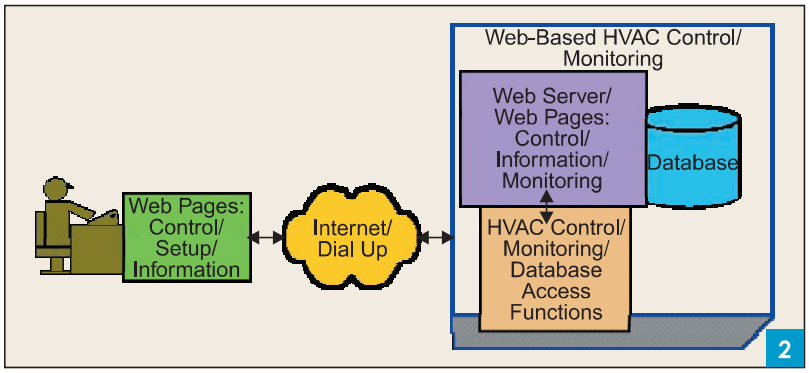

Operation of an Internet-based HVAC system.

Authorized licensed use limited to: Rich Pravata. Downloaded on March 09,2023 at 18:56:12 UTC from IEEE Xplore. Restrictions apply.
LENNOX EXHIBIT 1037
Lennox Industries Inc. v. Rosen Technologies LLC, IPR2023-00715, Page 3

intelligent controller that implements the HVAC supervisory control.

Digital outputs are used to turn on/off relays, actuators, valves, pumps and fan motors. Digital inputs are used to read switch inputs, position information, and more.

Networking and Communications

RS-485, as well as other types of device networking, may be supported as options in this system to allow data transmission between the HVAC system and external devices, sensors, and actuators. In addition, low-cost RF and power-line communication methods that use open communication media may be integrated to allow sensors and actuators of HVAC building systems to be interconnected and networked.

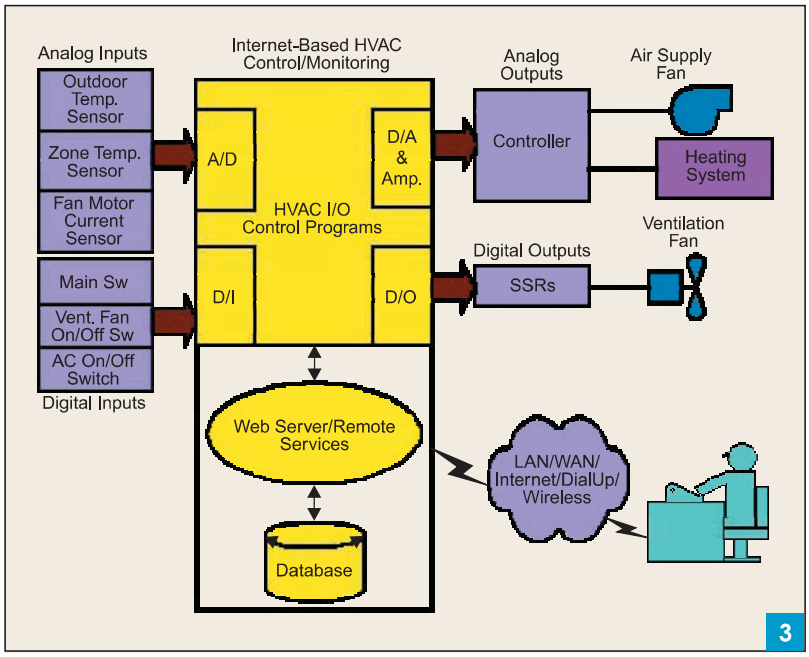

An experimental HVAC control and monitoring system.

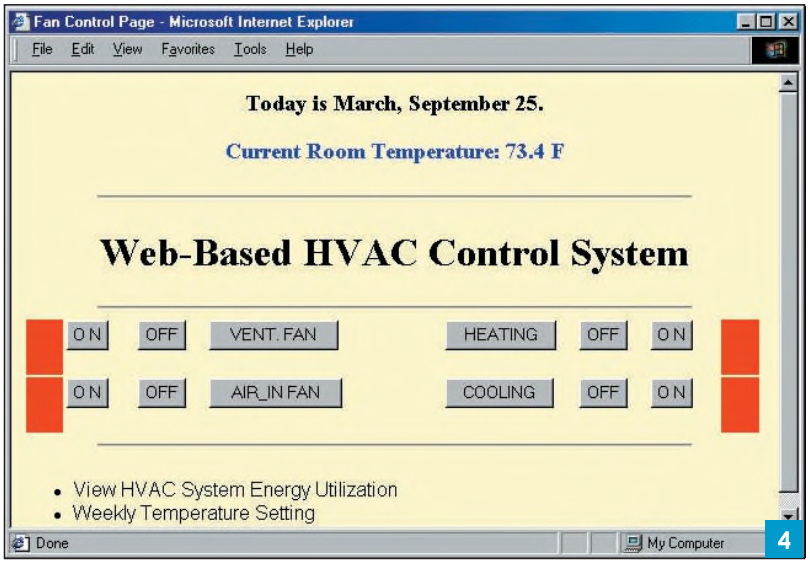

Web page for HVAC control system.

It is recommended that the following important networking design issues be considered:

- Internet protocols can be embedded even if an embedded controller is used as a Web server.
- Support device level access (serial port RS232/485, digital I/O board connection, and data acquisition subsystems) for measurement.
- A small database for HVAC applications that contains configuration parameters for set-points/devices under control, real-time data (temperature, humidity, current, voltage, etc.), and logging information.

Control and Monitoring Functions

Temperature, humidity, and ventilation are the most important factors to be monitored in HVAC systems. Energy losses arising from ventilation and air movement are predicted to become the dominant cause of heating and cooling loss in buildings during the next century [8]. The features listed below should be included to support monitoring control and operation scheduling of an Internet-based HVAC control and monitoring system

- user access functions
  - use Web browsers as graphical user interface
  - provide security and control for remote access, monitoring, and trouble shooting
  - display of set points, on/off status, sensor readings, operator positions, control inputs, switches
- multiple networking protocol supports, including Ethernet, RS485, direct dial-up, and more
- HVAC control and monitoring functions
  - humidifier, air quality, and temperature control
  - an automatic subsystem that uses sensors for detecting the opening of windows and air inlets and outlets to reduce or lock-out mechanically supplied cooling and ventilation [3]
  - optimal start and temperature-predicting programs for optimized energy utilization
  - partial load, zone monitoring, and control
- energy logging, performance auditing
  - HVAC operational data gathering through built-in sensors during the period of monitoring
  - real-time reporting of events and status
- maintenance functions
  - automatic fault reporting
  - problem diagnosis performed directly over the network

Authorized licensed use limited to: Rich Pravata. Downloaded on March 09,2023 at 18:56:12 UTC from IEEE Xplore. Restrictions apply.
LENNOX EXHIBIT 1037
Lennox Industries Inc. v. Rosen Technologies LLC, IPR2023-00715, Page 4

HTML SOURCE CODE

```
<!DOCTYPE HTML PUBLIC "-//W3C//DTD HTML 4.0 Transi-
tional//EN">
<HTML><HEAD><TITLE>Fan Control Page</TITLE>
<META content="text/html; charset=windows-1252"
http-equiv=Content-Type>
<META content=10 http-equiv=Refresh>
<SCRIPT language=JAVASCRIPT type=TEXT/JAVASCRIPT>
<!-- Hide script from old browsers

        var second, minutes, hours;

dayName = new Array ("Sunday","Monday","Tues-
day","Wednesday","Thursday","Friday","Saturday")
monName = new Array ("January", "February", "March",
"April", "May", "June", "July", "August", "September",
"October", "November", "December")

nowTime = new Date;
// End hiding script from old browsers -->
hours = nowTime.getHours();
    minutes = nowTime.getMinutes();
    seconds = nowTime.getSeconds();
</SCRIPT>

<META content="MSHTML 5.00.2614.3500" name=GENERA-
TOR></HEAD>
<BODY BGCOLOR=#ffffcc>
<CENTER>

<SCRIPT language=JAVASCRIPT type=TEXT/JAVASCRIPT>
<!-- Hidden script from old browsers

document.write("<H3>Today is " +
monName[nowTime.getDay()] + ", " +
       monName[nowTime.getMonth()] +
       " " + nowTime.getDate() +
       ".<\/H3>");

var Temp, TempValue;
Temp = 0.734;
TempValue = Temp * 100;
// End hiding script from old browsers -->
document.writeln(
"<h3><font color = blue>Current Room Temperature: " +
TempValue + " F</font></h3>");

// End hiding script from old browsers -->
</SCRIPT>
</CENTER>
<HR WIDTH = "80%">
<CENTER>
<H1>  Web-Based HVAC Control System</H1>
<HR WIDTH = "80%">
</CENTER>
<TABLE border=0 width=600>
  <TBODY>
  <TR>
    <TD bgColor=red height=25 width=25 td < Off>
    <TD height=25 noWrap width=46>
      <FORM action=MemMap method=post id=form1
name=form1><INPUT name=_F0900100_1 type=hidden
      value=_F0900100_d=1> <INPUT type=submit value="O
N" id=submit1 name=submit1>
<!--<INPUT NAME=goto TYPE=hidden
VALUE=hvaccontrol.html>-->
      </FORM>
    </TD>
    <TD height=25 noWrap width=46>
      <FORM action=MemMap method=post id=form2
name=form2><INPUT name=_F0900104_1 type=hidden
      value=_F0900104_d=1> <INPUT type=submit
value=OFF id=submit2 name=submit2> <!--<INPUT
NAME=goto TYPE=hidden VALUE=hvaccontrol.html>-->
      </FORM>
     </TD>
    <TD height=25 noWrap width=70>
      <FORM action=MemMap method=post id=form3
name=form3><INPUT type=submit value="VENT. FAN"
id=submit3 name=submit3>
<!--<INPUT NAME=goto TYPE=hidden
VALUE=hvaccontrol.html>-->
      </FORM>
    </TD>
    <TD height=25 noWrap width=50></TD>
    <TD height=25 noWrap width=70>
      <FORM action=MemMap method=post id=form4
name=form4><INPUT type=submit value="HEATING"
id=submit3 name=submit3>
<!--<INPUT NAME=goto TYPE=hidden
VALUE=hvaccontrol.html>-->
      </FORM>
    </TD>
    <TD height=25 noWrap width=46>
      <FORM action=MemMap method=post id=form5
name=form5><INPUT name=_F0900144_1 type=hidden
      value=_F0900144_d=1> <INPUT type=submit
value=OFF id=submit3 name=submit3> <!--<INPUT
NAME=goto TYPE=hidden VALUE=hvaccontrol.html>-->
      </FORM>
    </TD>
    <TD height=25 noWrap width=46>
      <FORM action=MemMap method=post id=form6
name=form6><INPUT name=_F0900140_1 type=hidden
      value=_F0900140_d=1> <INPUT type=submit value="O
N" id=submit4 name=submit4>
<!--<INPUT NAME=goto TYPE=hidden
VALUE=hvaccontrol.html>-->
      </FORM>
    </TD>
    <TD bgColor=red height=25 width=25 td < Off></TD>
</TR>
<TR>
    <TD bgColor=red height=25 width=25 td < Off>
    <TD height=25 noWrap width=46>
      <FORM action=MemMap method=post id=form7
name=form7><INPUT name=_F0900100_1 type=hidden
      value=_F0900100_d=1> <INPUT type=submit value="O
N" id=submit5 name=submit5>
<!--<INPUT NAME=goto TYPE=hidden
VALUE=hvaccontrol.html>-->
      </FORM>
    </TD>
    <TD height=25 noWrap width=46>
      <FORM action=MemMap method=post id=form8
name=form8><INPUT name=_F0900104_1 type=hidden
      value=_F0900104_d=1> <INPUT type=submit
value=OFF id=submit6 name=submit6> <!--<INPUT
NAME=goto TYPE=hidden VALUE=hvaccontrol.html>-->
      </FORM>
     </TD>
    <TD height=25 noWrap width=70>
      <FORM action=MemMap method=post id=form9
name=form9><INPUT type=submit value="AIR_IN FAN"
id=submit7 name=submit7>
<!--<INPUT NAME=goto TYPE=hidden
VALUE=hvaccontrol.html>-->
      </FORM>
    </TD>
    <TD height=25 noWrap width=50></TD>
    <TD height=25 noWrap width=70>
      <FORM action=MemMap method=post id=form10
name=form10><INPUT type=submit value="COOLING"
id=submit7 name=submit7>
<!--<INPUT NAME=goto TYPE=hidden
VALUE=hvaccontrol.html>-->
      </FORM>
    </TD>
    <TD height=25 noWrap width=46>
      <FORM action=MemMap method=post id=form11
name=form11><INPUT name=_F0900144_1 type=hidden
      value=_F0900144_d=1> <INPUT type=submit
value=OFF id=submit7 name=submit7> <!--<INPUT
NAME=goto TYPE=hidden VALUE=hvaccontrol.html>-->
      </FORM>
    </TD>
    <TD height=25 noWrap width=46>
      <FORM action=MemMap method=post id=form12
name=form12><INPUT name=_F0900140_1 type=hidden
      value=_F0900140_d=1> <INPUT type=submit value="O
N" id=submit8 name=submit8>
<!--<INPUT NAME=goto TYPE=hidden
VALUE=hvaccontrol.html>-->
      </FORM>
    </TD>
    <TD bgColor=red height=25 width=25 td < Off></TD>
</TR>
</TBODY>
</TABLE>
<HR WIDTH = "80%">
</CENTER>
<UL>
  <LI>
<DIV align=left><FONT face=Arial>View HVAC System En-
ergy
  Utilization</FONT></DIV></LI>
  <LI>
<DIV align=left><FONT face=Arial>Weekly Temperature
  Setting</FONT></DIV></LI></UL></BODY></HTML>
```

5

Authorized licensed use limited to: Rich Pravata. Downloaded on March 09,2023 at 18:56:12 UTC from IEEE Xplore. Restrictions apply.

LENNOX EXHIBIT 1037

Lennox Industries Inc. v. Rosen Technologies LLC, IPR2023-00715, Page 5

- online identification or problem solving to minimize trouble shooting and repair time.

The Experimental System

The experimental Internet-based HVAC monitoring and control system [14] (Fig. 3) consists of the following major components

- an Intel-based PC with Windows98, an Omni Web server, and a database; an 8255 digital I/O card (with 24 digital I/Os for on/off control of lights and fan motors), and a digital multimeter (for motor current measurement) accessed via a RS232 serial port
- an Ethernet brain controller, Ethernet-based I/O modules, including four A/D channels, two D/A channels, and eight digital I/Os from Opto 22

The experiment involves creating a Web control page for the Internet-based HVAC system control (Fig. 4). Authorized users can request this Web page from the HVAC Web server; then click on the "on" or "off" button to submit the operation request to the Web server to dispatch the control requests to the appropriate I/O modules in an Opto22 Ethernet brain and I/O controller. The brain then passes the command to digital-output module and turns the fan motor on or off.

The visual feedback is updated constantly to show the on/off status of the fans, cooling, and heating systems. The red color indicates the off state. JavaScript is used in this control page to show date and time information. The source code of this HTML page is listed in Fig 5.

Additional linked pages can be added for authorized users to change and view weekly temperature schedules, and to view system energy utilization, etc.

Summary

This article proposed the architecture of Internet-based HVAC control and monitoring systems. An experimental system was constructed for study. The preliminary investigation of the proposed Internet-based HVAC system, network protocols, and software systems suggest the following findings:

- The architecture is flexible and scalable.
- It allows easier connection of multi-vendor equipment.
- It can link easily with TCP/IP-based office and campus networks.

The author expects to continue the research on issues related to integrating this system with existing legacy control and security systems.

References

[1] Office of Building Technology, State and Community Programs, U.S. Dept. of Energy. (2000 March). Adding efficient controls to your heating or cooling system. Available: http://www.eren.doe. gov/buildings/heatcool_controls.html

[2] Center for the Analysis and Dissemination of Demonstrated Energy Technologies. (1997 June) Saving energy with energy-efficient HVAC systems in commercial buildings. CADDET Maxi Brochure No. 04. Available: http://www.caddet-ee.org/search/prodhome.cfm

[3] Office of Building Technology, State and Community Programs, U.S. Dept. of Energy. (2000 October 17). High-Performance Building Web site. Available: http://www.eren.doe.gov/buildings/ highperformance

[4] D.E. Miller. (2001). Statement before the California Energy Commission, on AB 970 appliance efficiency regulations. Available: http://www.ari.org/ga/lra/cec/index.html.

[5] V. Loftness. (2000 December 20). Energy savings potential of flexible and adaptive HVAC distribution systems for office buildings—Phase I, ARTI 21-CR, Research Project 605-30030. Available: http://www.arti-21cr.org/research/ongoing/ 605-30030.pdf.

[6] K. Stum. (2000 December 20). Methods for automated and continuous commissioning of buildings systems, ARTI 21-CR, Research Project 610-30040, http://www.arti-21cr.org/research/ongoing/610-30040.pdf.

[7] G. Bell, E. Mills, D. Sartor, D. Avery, M. Siminovitch, and M.A. Piette. (1998 April). A design guide for energy-efficient research laboratories, Lawrence Berkeley National Laboratory Center for Building Science Applications Team. Available: http:// ateam.lbl.gov/Design-Guide/credits.html

[8] Center for the Analysis and Dissemination of Demonstrated Energy Technologies. (1995 October). Energy Efficient HVAC Systems in Office Buildings. CADDET Analysis Series No. 15. Available: http://www.caddet-ee.org/search/prodhome.cfm

[9] G.C. Hourahan, New research program focuses on improvements for the 21st century. Available: http://innovations.copper.org/ global/ari.html

[10] I.R.W.H. Thang. Energy rfficiency—The paradox. Available: http://www.jsmahir.com.my/RW-JBE%201999.htm

[11] P.-E. Nilsson. (1994). Heating and cooling requirements in commercial buildings: A duration curve model including building dynamics. Available: http://www.hvac.chalmers.se/DOCS/ D27_1994.htm

[12] Energy Information Administration. Trends in residential air-conditioning usage from 1978 to 1997. Available: http://www.eia.doe.gov/emeu/consumptionbriefs/recs/actrends/recsactrends.html

[13] K. Sinclair. (2000 September). Building Automation: New Ways of Working. *Engineered Systems* [Web site]. Available: http://www.esmagazine.com/es/cda/articleinformation/features/bnp_features_item/0,2503,10761,00.html

[14] P.I.-H. Lin, Web Programming and Applications. Fort Wayne: Indiana University-Purdue University, 2001

Paul I-Hai Lin (lin@ipfw.edu) and Harold L. Broberg are with Indiana University - Purdue University in Fort Wayne, Indiana.

This article first appeared in its original form at the 2001 IEEE/IAS Annual International Appliance Technical Conference.

Authorized licensed use limited to: Rich Pravata. Downloaded on March 09,2023 at 18:56:12 UTC from IEEE Xplore. Restrictions apply.

LENNOX EXHIBIT 1037

Lennox Industries Inc. v. Rosen Technologies LLC, IPR2023-00715, Page 6