UNITED STATES PATENT AND TRADEMARK OFFICE

BEFORE THE PATENT TRIAL AND APPEAL BOARD

LENNOX INDUSTRIES INC.,

Petitioner,

v.

ROSEN TECHNOLOGIES LLC,

Patent Owner.

IPR2023-00715
Attorney Docket No.: 018635.0922

PETITION FOR *INTER PARTES* REVIEW OF CLAIMS 18 and 20 OF U.S. PATENT NO. 6,619,555

Mail Stop PATENT BOARD
Patent Trial and Appeal Board
United States Patent and Trademark Office
PO Box 1450
Alexandria, Virginia 22313-1450

TABLE OF CONTENTS

Page

PETITIONER'S EXHIBIT LIST VII

I. INTRODUCTION 1

II. MANDATORY NOTICES UNDER 37 C.F.R. 42.8(A)(1) 1

A. Real Party-in-Interest under 37 C.F.R. 42.8(b)(1) 1

B. Related Matters under 37 C.F.R. 42.8(b)(2) 1

C. Lead and Back-Up Counsel under 37 C.F.R. 42.8(b)(3) 2

D. Service Information under 37 C.F.R. 42.8(b)(4) 3

III. CLAIM LISTING 4

A. Claim 18 4

B. Claim 20 5

IV. REQUIREMENTS UNDER 37 C.F.R. 42.104 5

A. Grounds for Standing 5

B. Identification of Challenge and Statement of Precise Relief Requested 5

V. THE '555 PATENT 5

A. Prosecution History 6

VI. LEVEL OF ORDINARY SKILL IN THE ART 6

VII. CLAIM CONSTRUCTION 7

A. Terms Governed By 35 U.S.C. § 112, ¶6 7

B. Other Terms 8

VIII. SUMMARY OF PRIOR ART 8

A. The State of the Art 9

B. *Shamoon* (EX1004) 10

C. *Rainer* (EX1005) 12

D. *Inoue* (EX1006) 12

E. *Peters* (EX1007) 13

F. Weather.com (EX1008) 14

G. *Glorioso* (EX1009) 14

H. *Shah* (EX1010) 15

IX. THE ASSERTED GROUNDS OF INVALIDITY 16

A. Ground 1: Claims 18 and 20 are obvious over *Shamoon* in view of *Rainer*. 16

1. A POSITA Would Have and Could Have Combined *Shamoon* with *Rainer*. 16

2. Claim 18 20

a. 18[Pre] 20

b. 18[a] 20

c. 18[b] 22

d. 18[c][1] 25

e. 18[c][2] 26

f. 18[c][3] 28

g. 18[c][4] 29

h. 18[d] 33

i. 18[e] 35

3. Claim 20 38

B. Ground 2: Claims 18 and 20 are obvious over *Inoue* in view of *Peters* and *weather.com*. 38

1. A POSITA Would Have and Could Have Combined *Inoue* with *Peters*.....39

2. A POSITA Would Have and Could Have Combined *Inoue* and *Peters* with weather.com.....42

3. Claim 18.....43

a. 18[Pre].....45

b. 18[a].....46

c. 18[b].....47

d. 18[c][1].....49

e. 18[c][2].....51

f. 18[c][3].....52

g. 18[c][4].....54

h. 18[d].....59

i. 18[e].....60

4. Claim 20.....62

C. Ground 3: Claims 18 and 20 are obvious over *Glorioso* and *Shah*. ...62

1. A POSITA Would Have and Could Have Combined *Glorioso* with *Shah*.....62

2. Claim 18.....67

a. 18[Pre].....68

b. 18[a].....68

c. 18[b].....69

d. 18[c][1].....71

e. 18[c][2].....71

f. 18[c][3].....72

g. 18[c][4] 73

h. 18[d] 76

i. 18[e] 77

3. Claim 20 78

X. SECONDARY CONSIDERATIONS 79

XI. INSTITUTION SHOULD BE GRANTED 79

A. Discretion Under 35 U.S.C. § 314(a) 79

B. Discretion Under 35 U.S.C. §325(d) 84

XII. CONCLUSION 84

TABLE OF AUTHORITIES

Page(s)

CASES

10X Genomics, Inc. v. Bio-Rad Labs,
IPR2020-00086, Paper 8 (P.T.A.B. Apr. 27, 2020) 8

Abbott Diabetes Care, Inc. v. DexCom, Inc.,
IPR2022-00921, Paper 15 (P.T.A.B. Nov. 2, 2022).....8

Apple Inc. v. Fintiv, Inc.,
IPR2020-00019, Paper 11 (P.T.A.B. Mar. 20, 2020).....79, 83

Apple Inc. v. Smart Mobile Techs. LLC,
IPR2022-00808, Paper 24 (P.T.A.B. Sept. 29, 2022).....81

Facebook, Inc. v. USC IP P'ship, L.P.,
IPR2021-00033, Paper 13 (P.T.A.B. Apr. 30, 2021) 80

Gen. Plastic Indus. Co. v. Canon Kabushiki Kaisha,
IPR2016-01357, Paper 19 (P.T.A.B. Sept. 6, 2017).....78

Google LLC v. Parus Holdings, Inc.,
IPR2020-00846, Paper 9 (P.T.A.B. Oct. 21, 2020).....80, 81, 82, 83

Halliburton Energy Servs., Inc. v. U.S. Well Servs., LLC,
IPR2021-01037, Paper 12 (P.T.A.B. Jan. 19, 2022) 80

Micron Tech., Inc. v. Godo Kaisha IP Bridge 1,
IPR2020-01008, Paper 10, 14 (P.T.A.B. Dec. 7, 2020) 80

Micron Tech., Inc. v. Vervain, LLC,
IPR2021-01550, Paper 11 (P.T.A.B. Apr. 11, 2022) 80

Microsoft Corp. v. WSOU Inv., LLC,
IPR2021-00930, Paper 8, (P.T.A.B. Dec. 2, 2021) 80

Muniauction, Inc. v. Thomson Corp.,
532 F.3d 1318 (Fed. Cir. 2008) 64

NHK Spring Co. v. Intri-Plex Techs., Inc.,
IPR2018-00752, Paper 8, (P.T.A.B. Sept. 12, 2018).....79

Nidec Motor Corp. v. Zhongshan Broad Ocean Motor Co.,
868 F.3d 1013 (Fed. Cir. 2017) 7

Oticon Med. AB v. Cochlear Ltd.,
IPR2019-00975, Paper 15 (P.T.A.B. Oct. 16, 2019).....82

Qualcomm Inc. v. Apple Inc.,
24 F.4th 1367 (Fed. Cir. 2022) 20, 43, 65

Sand Revolution II LLC v. Cont'l Intermodal Grp.-Trucking LLC,
IPR2019-01393, Paper 24 (P.T.A.B. Jun. 16, 2020) 79, 82, 83

Soverain Software LLC v. Newegg Inc.,
705 F.3d 1333 (Fed. Cir. 2013) 64

Verdant Envtl. Techs. v. Ecobee Inc.,
No 1:10-cv-02771 (N.D. Ill. May 4, 2010) 2

STATUTES

35 U.S.C. §325(d) 83

OTHER AUTHORITIES

37 C.F.R. §42.100(b) 7

Office Patent Trial Practice Guide
77 Fed. Reg. 48,756, 48,759-60 (2012).....1

PETITIONER'S EXHIBIT LIST

Ex[No.][1]	Description of Documents
1001	U.S. Patent No. 6,619,555 ("'555 Patent")
1002	Declaration of R. Jacob Baker, Ph.D., P.E.
1003	Prosecution File History of the '555 Patent
1004	U.S. 2003/0034898 ("*Shamoon*")
1005	U.S. Patent No. 7,398,821 ("*Rainer*")
1006	EP 1085399 ("*Inoue*")
1007	U.S. Patent No. 6,470,289 ("*Peters*")
1008	Archived 1999 source code for weather.com, available at https://web.archive.org/web/19991128144159/http://www2.weather.com/
1009	U.S. Patent No. 5,926,776 ("*Glorioso*")
1010	U.S. Patent No. 6,621,507 ("*Shah*")
1011	Scheduling Order, *Rosen Techs. LLC v. Lennox Indus., Inc.*, No. 3:22-cv-00732-K, Dkt. 29 (N.D. Tex. Sept. 1, 2022)
1012	Transcript of Deposition of Howard J. Rosen, December 14, 2022, *Rosen Technologies LLC v. Lennox Industries, Inc.*, No. 3:22-cv-00732-K (N.D. Tex.)
1013	Affidavit of Nathaniel E. Frank-White dated November 28, 2022 & Exhibit A
1014	Ari Luotonen, Web Proxy Servers (1998)

[1] Citations to issued patents and to EX1012 are made by column and line number. Citations to patent application publications and to Exhibit 1002 are made by paragraph number. Citations to Exhibit 1003 is to the page number added by the exhibit label. All other citations are to the original page numbering in the exhibit.

Ex[No.][1]	Description of Documents
1015	Andrew S. Tanenbaum, Computer Networks (3d ed. 1996)
1016	Joint Claim Construction and Prehearing Statement, *Rosen Techs. LLC v. Lennox Indus., Inc.*, No. 3:22-cv-00732-K, Dkt. 54 (N.D. Tex. Feb. 23, 2023)
1017	Plaintiff's Amended Disclosure of Asserted Claims and Preliminary Infringement Contentions & Exhibit A, dated November 21, 2022, *Rosen Techs. LLC v. Lennox Indus., Inc.*, No. 3:22-cv-00732-K, (N.D. Tex.)
1018	U.S. Patent No. 6,032,867 ("*Dushane*")
1019	U.S. Patent No. 6,754,485 ("*Obradovich*")
1020	U.S. Patent No. 6,615,175 ("*Gazdzinski*")
1021	U.S. Patent No. 5,460,327 ("*Hill*")
1022	U.S. Patent No. 7,084,859 ("*Pryor*")
1023	Gillet, Sharon Eisner et al., A Taxonomy of Internet Appliances, Telecommunications Policy Research Conference (2000)
1024	Cardio Manual, Secant Home Automation Inc ("Cardio Manual")
1025	KR1998/0701245 ("Ehers") translated with certification
1026	U.S. Patent No, 6,161,133 ("*Kikinis"*)
1027	U.S. Patent No. 5,784,291 ("*Chen*")
1028	U.S. Patent No. 6,665,163 ("*Yanagisawa*")
1029	Statutory Disclaimer and Declaration of Howard Rosen entered in U.S. Patent No. 6,824,069
1030	U.S. Patent Pub. No. 2002/0103878 ("*Moncibais*")
1031	U.S. Patent No. 6,496,361 ("*Kim*")
1032	U.S. Patent No. 5,485,614 ("*Kocis*")

Ex[No.][1]	Description of Documents
1033	U.S. Patent No. 6,804,792 ("*Nishikawa*")
1034	U.S. Patent No. 6,023,587 ("*Watts*")
1035	U.S. Patent No. 6,098,092 ("*Padzensky*")
1036	CA Patent 2,265,292 ("*Weiss*")
1037	Lin et al., Internet-Based Monitoring and Controls for HVAC Appliances, IEEE Industry Appliance Magazine (Jan.-Feb. 2002)
1038	U.S. Patent No. 6,868,293 ("*Schurr*")
1039	U.S. Patent No. 5,950,709 ("*Krueger*")
1040	Dokter, D.A., From Glosser-RuG to Glosser-WeB (Apr. 18, 1997)
1041	Major, April, Copyright Law Tackles Yet Another Challenge: The Electronic Frontier of the World Wide Web, 24 Rutgers Computer Tech. L. J. 75 (1998)
1042	Mefford, FDFiles: Find Dead Files, PC Magazine (December 17, 1996)
1043	Gilster, Ron, PC Hardware: A Beginner's Guide (2001).
1044	Andrew T. Dufresne, Nathan K. Kelley, & Lori Gordon, *How reliable are trial dates relied on by the PTAB in the Fintiv analysis?*, PERKINS COIE 1600 PTAB & BEYOND, Oct. 29, 2021
1045	Katherine K. Vidal, Memorandum: Interim Procedure for Discretionary Denials in AIA Post-Grant Proceedings with Parallel District Court Litigation (June 21, 2022)
1046	Dani Kass, *Fintiv Fails: PTAB Uses 'Remarkably Inaccurate' Trial Dates*, LAW360, Nov. 2, 2021
1047	Docket Sheet as of March 19, 2023, *Rosen Technologies LLC v. Lennox Industries, Inc.*, No. 3:22-cv-00732-K (N.D. Tex.)

I. INTRODUCTION

Lennox Industries Inc. ("Petitioner" or "Lennox") respectfully submits this Petition for *inter partes* review of Claims 18 and 20 (the "Challenged Claims") of U.S. Patent No. 6,619,555 (the "'555 Patent"). Petitioner respectfully requests institution of *inter partes* review and a finding that the Challenged Claims are unpatentable.

II. MANDATORY NOTICES UNDER 37 C.F.R. 42.8(a)(1)

A. Real Party-in-Interest under 37 C.F.R. 42.8(b)(1)

The real parties-in-interest are Lennox Industries Inc., Lennox International Inc., Heatcraft Inc., Heatcraft Technologies Inc., and Lennox Procurement Company Inc. Lennox Industries Inc. is the Petitioner. Lennox Industries Inc., Heatcraft Inc., Heatcraft Technologies Inc., and Lennox Procurement Company Inc. are wholly owned subsidiaries of Lennox International Inc. No other parties exercised or could have exercised control over this Petition; no other parties funded or directed this Petition. *See* Office Patent Trial Practice Guide, 77 Fed. Reg. 48,756, 48,759-60 (2012) (to be codified at 37 C.F.R. 42).

B. Related Matters under 37 C.F.R. 42.8(b)(2)

As of the filing date of this Petition, and to the best knowledge of Petitioner, the '555 Patent is involved in the following:

Rosen Techs. LLC v. Lennox Indus. Inc., No. 3:22-cv-00732-K (N.D. Tex.) ("NDTX Litigation"). The '555 Patent was first asserted against Petitioner in a

Complaint for Patent Infringement filed on Mar. 31, 2022. Petitioner moved to dismiss the complaint on June 21, 2022. On January 4, 2023, Petitioner's motion to dismiss was granted in part and denied in part.

As of the filing date of this Petition, and to the best knowledge of Petitioner, the '555 Patent has been involved in the following proceedings in which Petitioner was not a party:

Rosen Techs. LLC v. Resideo Techs., Inc., No. 6:22-cv-00131 (W.D. Tex. Feb. 6, 2022) (dismissed on Oct. 27, 2022); and

Verdant Envtl. Techs. v. Ecobee Inc., No 1:10-cv-02771 (N.D. Ill. May 4, 2010) (closed pursuant to notice of voluntary dismissal on Nov. 1, 2010).

Additionally, the '555 Patent is related to U.S. Patent No. 6,789,739 (the "'739 Patent), which is the subject of IPR2023-00716, filed by Petitioner on the same day March 29, 2023. Patent Owner has also asserted the '739 Patent against Petitioner in the NDTX Litigation.

C. Lead and Back-Up Counsel under 37 C.F.R. 42.8(b)(3)

Petitioner provides the following designation of counsel:

LEAD COUNSEL	BACK-UP COUNSEL
David G. Wille (Reg. No. 38,363) **BAKER BOTTS L.L.P.** 2001 Ross Avenue, Suite 900 Dallas, TX 75201-2980 Tel: 214-953-6595 david.wille@bakerbotts.com	Samir A. Bhavsar (Reg. No. 41,617) Tel: 214-953-6581 samir.bhavsar@bakerbotts.com Clarke W. Stavinoha (Reg. No. 71,152) Tel: 214-953-6484 clarke.stavinoha@bakerbotts.com

	Melissa Muenks (Reg. No. 78,860) Tel: 214-953-6949 melissa.muenks@bakerbotts.com Caroline Duncan (Reg. No. 79,897) Tel: 214-953-6514 caroline.duncan@bakerbotts.com **BAKER BOTTS L.L.P.** 2001 Ross Avenue, Suite 900 Dallas, TX 75201-2980

D. Service Information under 37 C.F.R. 42.8(b)(4)

A copy of this entire Petition, including all Exhibits and a power of attorney, is being served by FEDERAL EXPRESS, costs prepaid, to the correspondent for the ’555 Patent at the USPTO Howard B. Rosen 1 Lyncroft Road, Hampstead, QC H3X 3E3, Canada; to the address for the attorney or agent of record listed in the assignment record for the ’555 Patent who is also the attorney or agent of record for the other four asserted patents in the NDTX Litigation, Marc Hankin, Hankin Patent Law, APC, 12400 Wilshire Boulevard, Suite 1265, Los Angeles, CA 90025; and to the address of the attorney or agent of record for Patent Owner in the NDTX Litigation: Hao Ni, NI, WANG & MASSAND, PLLC, 8140 Walnut Hill Ln., Ste. 500, Dallas, TX 75231.

Please address all correspondence to lead and back-up counsel. Petitioner consents to service at lead counsel’s address provided above. Petitioner consents to electronic service, provided it is made to all of the following e-mail addresses:

- david.wille@bakerbotts.com;
- samir.bhavsar@bakerbotts.com;
- clarke.stavinoha@bakerbotts.com;
- melissa.muenks@bakerbotts.com; and
- caroline.duncan@bakerbotts.com.

A Power of Attorney is filed concurrently herewith under 37 C.F.R. §42.10(b).

III. CLAIM LISTING

A. Claim 18

18[Pre]	A thermostat system for controlling space conditioning equipment comprising:
18[a]	A) a temperature sensor for providing an electrical signal indicative of the temperature of a conditioned space in which the temperature sensor is situated;
18[b]	B) a liquid crystal display for selectively displaying an alphanumeric message;
18[c][1]	C) a processor, said processor including: 1) a central processing unit;
18[c][2]	2) a real time clock;
18[c][3]	3) a memory coupled to said central processing unit for storing program and data information; and
18[c][4]	4) an input/output unit including:
18[c][4][a]	a) a sensor input coupled to said temperature sensor for receiving said electrical signal therefrom;
18[c][4][b]	b) a control output coupled to the space conditioning equipment for issuing control signals thereto; and
18[c][4][c]	c) a communications interface adapted to establish bi-directional communications between said processor and a first remote correspondent which is a source of current information; and
18[d]	D) means coupling said communications interface and said first remote correspondent; and
18[e]	a program stored in said memory for displaying messages received from said first remote correspondent, which received messages do

	not pertain to the operation of said thermostat system, on said liquid crystal display.

B. Claim 20

20	The thermostat system of claim 18 in which communications between said first remote correspondent and said communications interface is carried out via the Internet.

IV. REQUIREMENTS UNDER 37 C.F.R. 42.104

A. Grounds for Standing

Petitioner certifies that the ’555 Patent is available for IPR and that Petitioner is not barred or otherwise estopped.

B. Identification of Challenge and Statement of Precise Relief Requested

This IPR, supported by the declaration of Dr. R. Jacob Baker, Ph.D., P.E. (EX1002), requests cancelation of Claims 18 and 20 of the ’555 Patent under the following grounds:

Ground	’555 Patent Claims	Basis for Challenge
1	18, 20	Obvious under §103 based on *Shamoon* in view of *Rainer*
2	18, 20	Obvious under §103 based on *Inoue* in view of *Peters* and *weather.com*
3	18, 20	Obvious under §103 based on *Glorioso* in view of *Shah*

V. The ’555 Patent

While the ’555 Patent claims are wordy and include a bunch of conventional hardware elements, Claim 18 essentially covers a thermostat connected to the

Internet that displays "current information" retrieved from the Internet. EX1001, Claim 18; EX1002, ¶¶44-45, 65-72.

The '555 Patent concerns a thermostat system that receives information from a "remote correspondent" that is a "source of current information, such as "local weather" or stock quotes. EX1001, 4:10-15, 4:45-49, 5:2-16. The '555 Patent describes that the remote correspondent may have an Internet address. *Id.*, 5:31-33, 6:19-45, Fig. 4.

A. Prosecution History

The '555 Patent was filed as Application No. 10/075,886 on February 13, 2002, the earliest possible priority date. Applicant amended element 18[e] to add the following limitations:

> a program stored in said memory for displaying messages <u>received</u> from said first remote correspondent, <u>which received messages do not pertain to the operation of said thermostat system</u>, on said liquid crystal display.

EX1003, 5/6/2003 Amendment, 65, 69. Applicant distinguished prior art (Proffitt) displaying an "overrideable setback mode" which "is currently operating to control the HVAC equipment" because the claimed message "is not a pre-stored response to be displayed upon receipt of a particular command." *Id.*, 72-73; EX1002, ¶¶45-46.

VI. LEVEL OF ORDINARY SKILL IN THE ART

A person of ordinary skill in the art ("POSITA") as of February 13, 2002

would have had a Bachelor of Science degree in Electrical Engineering or a year or two of experience working with or designing processor-based systems with network connectivity. EX1002, ¶49. A person with less or different education but more relevant practical experience, or vice versa, may also meet this standard.

VII. CLAIM CONSTRUCTION

Petitioner interprets the claims "in accordance with the ordinary and customary meaning…as understood by one of ordinary skill in the art." 37 C.F.R. §42.100(b). Except as set forth below, the Board need not construe any term to find the Challenged Claims invalid. *Nidec Motor Corp. v. Zhongshan Broad Ocean Motor Co.*, 868 F.3d 1013, 1017 (Fed. Cir. 2017).

A. Terms Governed By 35 U.S.C. § 112, ¶6

The challenged claims of the '555 Patent recites "means" for performing various functions. Element 18[d] recites "means coupling." EX1001, Claim 18.

In the related litigation, the parties agree that "means coupling" is governed by 35 U.S.C. § 112, ¶6. EX1016, 2-5. Petitioner has argued the claim is indefinite for lacking corresponding structure. *Id*. Without conceding that "means coupling" satisfies 35 U.S.C. § 112, Petitioner applies Patent Owner's proposed construction, without conceding it is correct.

Limitation	Structure and Function
"means coupling said communications interface and said first remote correspondent;"	Function: coupling the communications interface and the remote correspondent

	Structure: a serial link and/or data link and any equivalents EX1001, Fig. 1, 4:4-15, 6:1-18

B. Other Terms

In related litigation, Patent Owner contends that the "sensor input," "control output," "communications interface," and "program" recited in Claim 18 are not subject to 35 U.S.C. § 112, ¶6. EX1016, 5-17, 26-30. Petitioner applies Patent Owner's "plain and ordinary meaning" interpretations here, without conceding they are correct.

In related litigation, Petitioner has taken the position that "current information" and "which received messages…" are indefinite. EX1016, 31-37. Petitioner applies Patent Owner's plain meaning interpretations, again without conceding they are correct. EX1016, 5-37. This approach is permitted. *See 10X Genomics, Inc. v. Bio-Rad Labs*, IPR2020-00086, Paper 8, 21 (P.T.A.B. Apr. 27, 2020); *Abbott Diabetes Care, Inc. v. DexCom, Inc.*, IPR2022-00921, Paper 15, 7-11 (P.T.A.B. Nov. 2, 2022).

VIII. SUMMARY OF PRIOR ART

Petitioner assumes without conceding that the Challenged Claims are entitled to a February 13, 2002 priority date, and thus are subject to the pre-AIA provisions of 35 U.S.C. §§102 and 103.

A. The State of the Art

The ’555 Patent covers a thermostat that displays “current information” retrieved from the Internet—a prior art concept. EX1002, ¶¶61-62. First, numerous references teach connecting a thermostat to the Internet, as it “makes sense” to do so. EX1023, 9 n.10. Thermostats are examples of Internet “appliances.” EX1026, 4:38-52. Internet connection allows a user to configure the thermostat for their desired language. EX1010, Abstract, 1:41-51, 3:49-65. Internet connection allows displaying information. EX1026, 4:46-52; EX1022, 55:14-57; EX1005, 4:31-34, 5:28-31; EX1020, 3:19-26; EX1019, 1:18-30.

Second, numerous references teach displaying “current information.” EX1002, ¶¶63-64. One suggests having a bedroom Internet appliance to check the weather. EX1023, 6 n.6. A thermostat can obtain weather information for control and display purposes. EX1005, 4:31-34, 5:28-31. A car thermostat can be used for Internet surfing. EX1022, 55:49-57. Thermostats could display announcements, promotions, or the customer’s energy bill. EX1009, 5:61-6:1; EX1005, 5:37-41. Current information displayed would also include stock quotations, and breaking news headlines. EX1020, 3:19-26. Local alerts, such as weather alerts were also enabled. EX1025, 65-2, 65-3, 65-17.

Finally, Claim 18’s hardware elements were well known and used in thermostats. EX1002, ¶¶65-72. The ’555 Patent specification and Inventor Rosen admit that these elements (temperature sensor, LCD display, processor, real

time clock, memory storing a program, sensor input, control output, and modem) were well known before the priority date. EX1001, 1:28-55, 3:31-60, 6:1-11; EX1012, 286:16-19, 287:22-288:11, 289:3-24, 290:8-11, 290:19-291:14; EX1005, 5:28-31, EX1019, 1:19-30, 5:26-30; EX1020, 5:60-63, 11:7-57; EX1026, 2:26-44, 5:34-38; EX1037, 50-51.

B. *Shamoon* (EX1004)

Shamoon (U.S. Patent Publication No. 2003/0034898) was filed on November 13, 2001, making it prior art at least under 35 U.S.C. § 102(e). EX1004, Cover.

Shamoon's Figure 6 "is a block diagram of a remote control apparatus and its thermostat and X-10 components according to the present invention." EX1004,

¶[0034].

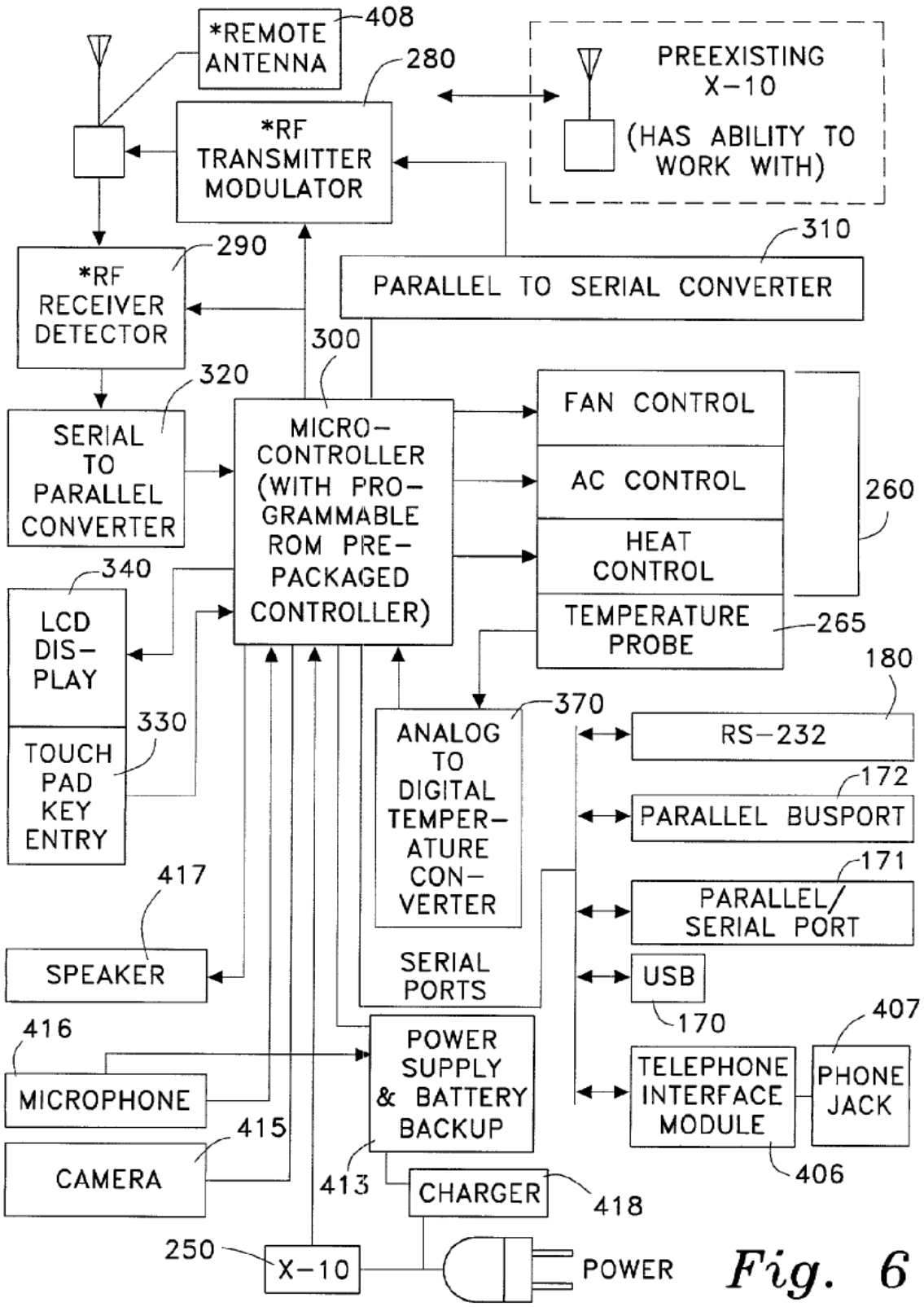
*REMOTE ANTENNA
408
280
PREEXISTING X-10
(HAS ABILITY TO WORK WITH)
*RF TRANSMITTER MODULATOR
310
290
*RF RECEIVER DETECTOR
PARALLEL TO SERIAL CONVERTER
300
320
SERIAL TO PARALLEL CONVERTER
MICRO-CONTROLLER (WITH PRO-GRAMMABLE ROM PRE-PACKAGED CONTROLLER)
FAN CONTROL
AC CONTROL
HEAT CONTROL
TEMPERATURE PROBE
260
265
340
LCD DIS-PLAY
330
TOUCH PAD KEY ENTRY
180
370
ANALOG TO DIGITAL TEMPER-ATURE CON-VERTER
RS-232
172
PARALLEL BUSPORT
171
PARALLEL/ SERIAL PORT
417
SPEAKER
SERIAL PORTS
USB
170
407
416
POWER SUPPLY & BATTERY BACKUP
TELEPHONE INTERFACE MODULE
PHONE JACK
MICROPHONE
415
CAMERA
413
CHARGER
418
406
250
X-10
POWER

Fig. 6

Id., Fig. 6. While *Shamoon* teaches the ability to remote control a thermostat, it indicates "[t]he wall thermostat controller of the invention uses the same operating system as the handheld controller, has similar hardware, and performs pretty much the same." EX1004, ¶[0040]. *Shamoon* teaches connection of the thermostat to the Internet. EX1004, ¶[0083].

C. *Rainer* (EX1005)

U.S. Patent No. 7,398,821 to Rainer ("*Rainer*") was filed March 12, 2001, making it prior art under at least pre-AIA 35 U.S.C. §§102(a), (e).

Rainer discloses a thermostat connected to the Internet. EX1005, 3:28-32, 4:31-34, 5:28-31, Fig. 2. *Rainer*'s thermostat can obtain weather information from the Internet for "control and display purposes." *Id*., 4:31-34, 5:28-31, 5:37-41.

D. *Inoue* (EX1006)

EP 1085399 to *Inoue* ("*Inoue*") was filed on March 29, 2000, and published on March 21, 2001, making it prior art under at least pre-AIA 35 U.S.C. §102(a) and

(e). *Inoue* discloses a notebook-type personal computer. EX1006, ¶[0020], Fig. 1.

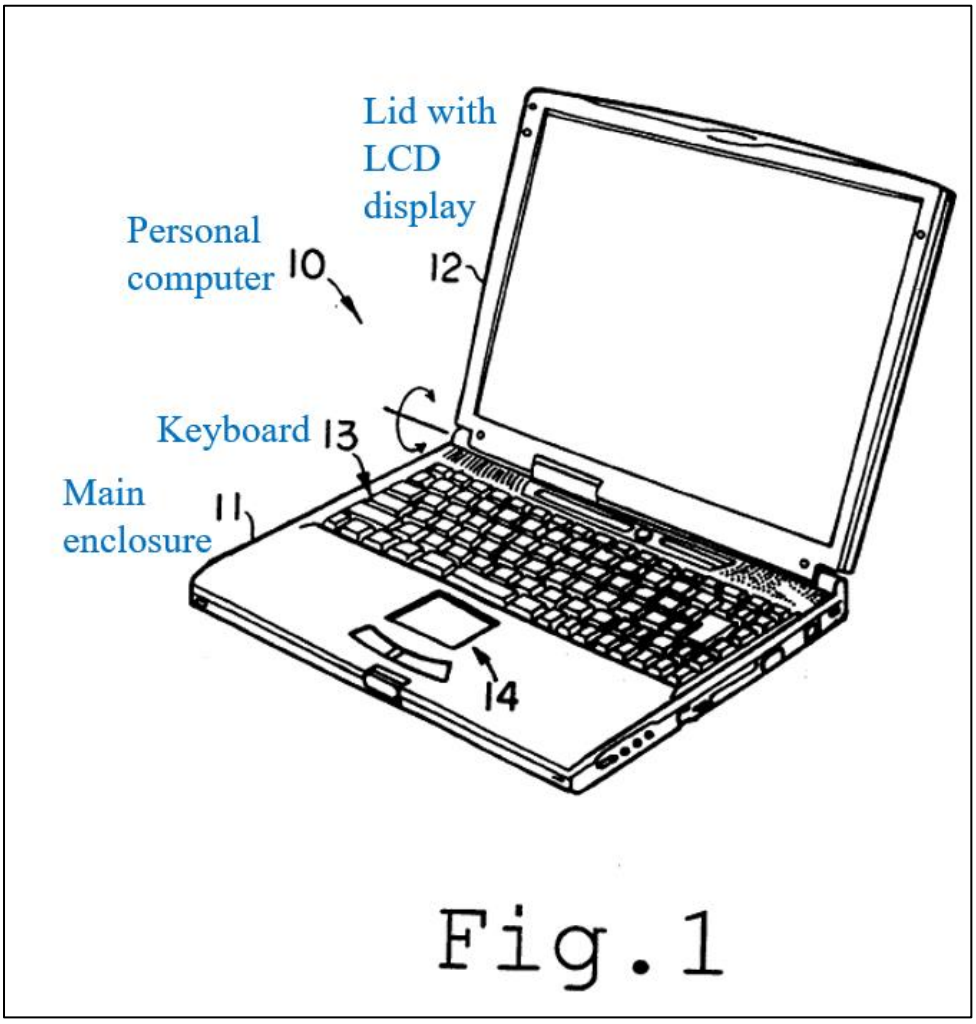

Inoue qualifies as a "thermostat system" because it has a sensor measuring temperature inside the main enclosure and controls "space conditioning equipment" (a fan). EX1006, ¶¶[0002], [0011], [0015], [0029], [0038].

E. *Peters* (EX1007)

U.S. Patent No. 6,470,289 to Peters ("*Peters*"), was filed August 5, 1999 as U.S. App. No. 09/368,950, making it prior art under at least pre-AIA 35 U.S.C.

§§102(a)-(b).

Peters discloses another laptop computer that is a thermostat system. EX1007, Abstract, 3:50-4:6, 5:20-31, Fig. 1. *Peters* discloses two temperature sensors that indicate the temperature inside the enclosure and control the fan. EX1007, Abstract, 4:7-31, 6:12-21.

F. Weather.com (EX1008)

Weather.com is documentation concerning the website published on January 26, 1997, making it prior art under at least pre-AIA 35 U.S.C. §§ 102(a) and (b). EX1013, ¶[0005]. Inventor Rosen used the website in the 1990s. EX1012, 223:12-15.

Weather.com provides an example of code for a website that can be accessed via the Internet and provide weather data to a requester. Petitioner relies upon the weather.com printed publication and not on the system itself.

G. *Glorioso* (EX1009)

U.S. Patent No. 5,926,776 to Glorioso ("*Glorioso*") issued on July 20, 1999, making it prior art under at least pre-AIA 35 U.S.C. §102(a)-(b).

Glorioso discloses a "smart thermostat" as illustrated in Figure 1:

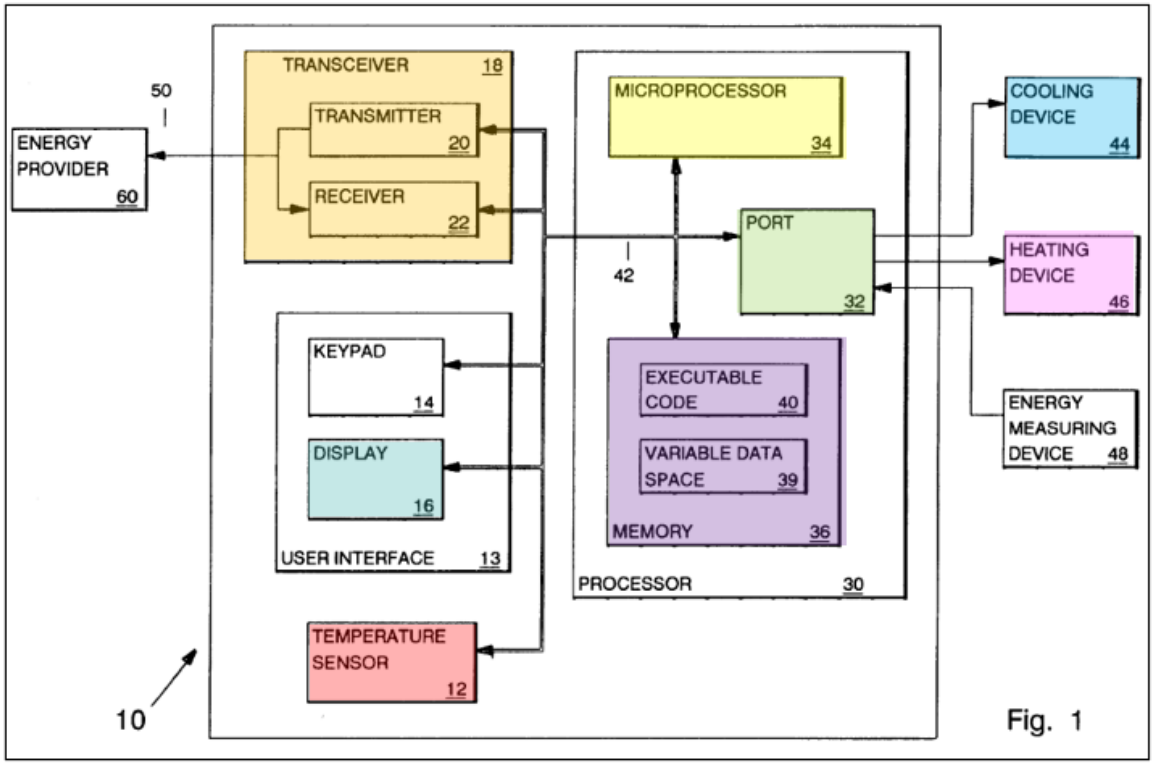

EX1009, Fig. 1. *Glorioso* has conventional components. EX1009, 2:54-3:8, 4:1-17, Abstract, Fig. 1. *Glorioso*'s thermostat communicates to an energy provider through a communication network to receive information, including the current price level for energy, billing, "outages, announcements, promotions, or the like." *Id*., 3:8-10, 4:1-4, 4:39-44, 4:52-5:19, 6:4-30,Fig. 2.

H. *Shah* (EX1010)

U.S. Patent No. 6,621,507 to Shah ("*Shah*") was filed on November 3, 2000, making it prior art under at least pre-AIA 35 U.S.C. §102(e).

Shah discloses a thermostat system connected to the Internet. EX1010, Abstract, 3:44-65, Fig. 1. *Shah*'s thermostat allows the user to select a preferred language and download the corresponding user interface from the Internet. *Id*.,

Abstract, 2:41-55, 3:44-65, Fig. 2.

IX. THE ASSERTED GROUNDS OF INVALIDITY

A. Ground 1: Claims 18 and 20 are obvious over *Shamoon* in view of *Rainer*.

1. A POSITA Would Have and Could Have Combined *Shamoon* with *Rainer*.

A POSITA would have been motivated to combine *Shamoon* with *Rainer* to arrive at the claimed invention. EX1002, ¶¶91-101. *Shamoon* and *Rainer* are analogous as both disclose thermostats connected to the Internet. EX1002, ¶¶91-92; EX1005, 3:28-32, 5:28-31, Fig. 2. *Shamoon* discloses a "web-based thermostat" connected to the Internet (EX1004, ¶[0083]) and that a "principal thrust of the invention is to eliminate the need for a PC" for certain applications. EX1004, ¶[0039]. *Rainer* similarly discloses a thermostat connected to the Internet. EX1005, 3:28-32, 5:28-31, Fig. 2.

It would have been obvious to a POSITA to combine *Shamoon*'s "web based thermostat" with that of *Rainer* to obtain current information. EX1002, ¶¶93-95; EX1004, ¶¶[0062], [0083]-[0084], Fig. 7; EX1005, 4:31-34, 5:28-31, Fig. 1. A POSITA looking to implement *Shamoon*'s web based thermostat would have looked to similar references such as *Rainer* for additional features to include, especially those that eliminate the need for a PC as taught by *Shamoon*. EX1002, ¶93. *Rainer's* communication link allows a user to obtain "current utility pricing information" and weather information. EX1005, Fig. 1, 4:6-10, 4:31-34, 5:37-41,

6:14-19, 7:15-19. This eliminates the need for a PC for getting such information.

It was common knowledge that the Internet is a source of diverse current information and that numerous types of information could be displayed by a thermostat. EX1002, ¶94; *supra*, §VIII.A. A reason that multiple references teach providing "current information" for display on thermostats is that the information is considered useful to the user—otherwise there would be no reason to provide the information. *Id.* Once a thermostat is connected to the Internet it is obvious that copious amounts of information could be displayed on a thermostat of any type—whether current or not. *Id.* The type of information to display is a matter of design choice. *Id.* As was common knowledge, a "network (e.g., Internet) interface" on a control system "provide[s] rapid access to a variety of web sites or URLs of interest, such as those providing local weather, directions from the elevator to local points of interest, stock market quotations, breaking news headlines, etc." EX1020, at 3:22-25. It would have been obvious that once a thermostat is connected to the Internet, that any type of information could be displayed on the screen of the thermostat from the Internet, especially the kinds of information that prior art teaches could be displayed on the screen of a thermostat, such as the information taught by *Rainer*. EX1002, ¶94.

A POSITA would have had a reasonable expectation of success in making the combination because *Shamoon* already includes the hardware, software, and circuitry for such a modification. EX1002, ¶95; EX1004, Fig. 6. Such a

modification would not have involved a substantial modification or undue experimentation. EX1002, ¶95. Rather, it would have involved combining known prior art elements (communications links to the Internet) according to known methods (coupling) to yield predictable results (connecting the thermostat to the Internet to obtain current information). *Id*. Modifying *Shamoon*'s thermostat to obtain information from the Internet would have involved a simple software change because web browser software could be used to obtain the information. EX1026, Abstract, 2:38-41, 4:42-50, 6:57-64. It would have been a matter of design choice to use the communications interface of *Shamoon* or *Rainer* to connect the *Shamoon-Rainer* thermostat to the Internet. EX1002, ¶95.

It would have been obvious to a POSITA to modify or combine *Shamoon*'s LCD display displaying alphanumeric messages with that of *Rainer*'s LCD display displaying current information received from the Internet. EX1002, ¶¶96-97; EX1004, ¶¶[0040], [0061], [0065]-[0066], [0070]; Figs. 2, 6; EX1005, 4:31-34, 5:37-41, 5:47-52, Fig. 1. The purpose of obtaining the information in *Rainer* was to display it. EX1004, 4:31-34; EX1002, ¶96. If the *Shamoon* LCD could not display the received information, it would have been obvious to use *Rainer's* display which is suitable to display the information. Displaying the received information on the display is one of a finite number of options for communicating the received information to the user. EX1002, ¶96. A POSITA would have recognized the benefits of displaying information to further *Shamoon*'s goal of "eliminat[ing] the

need for a PC for the many and myriad applications." EX1004, ¶[0039]. A POSITA would have had a reasonable expectation of success in such a combination as it would have involved minimal, if any, modification to *Shamoon*'s LCD display. EX1002, ¶97. *Shamoon*'s thermostat and display already would include the hardware, software, and circuitry for such an implementation. *Id*. Using *Rainer's* display is a simple matter of design choice. *Id.*

Finally, it would have been obvious to a POSITA to modify *Shamoon-Rainer*'s thermostat to include a program stored in memory for displaying the information received from the Internet. EX1002, ¶101. It was common knowledge that web browsers could be used with Internet appliances, such as thermostats. EX1026, Abstract, 2:31-44, 2:38-41, 4:38-52, 6:56-7:5. A POSITA would have recognized the benefits of such a modification to facilitate displaying the received information. EX1002, ¶101. Further, a POSITA would have understood that a program stored in memory is the primary way to display information received from the Internet. *Id*. (citing EX1035, Abstract, 3:8-49, Figs. 1-2; EX1036, 4:4-5; EX1040, 4; EX1041, 82, 93). A POSITA would have had a reasonable expectation of success as incorporating such a program would have involved little, if any, modification to *Shamoon-Rainer*'s thermostat. *Id*. As addressed in 18[e], the *Shamoon-Rainer* thermostat already would have included the hardware, software, and circuitry to incorporate such a program. Moreover, such a modification would have involved combining well known prior art elements

(programs and memory) according to known methods (storing programs in memory) to achieve predictable results (displaying information). EX1002, ¶101.

2. Claim 18

Each of the elements 18[Pre]-18[d] are disclosed by *Shamoon*, as discussed below. To the extent Patent Owner disagrees, each of these elements is also common knowledge of a POSITA as admitted by the '555 Patent. EX1001, 1:18-64, 4:31-60; 4:13-15, 6:1-10; EX1002 ¶¶65-72, 89-90. Petitioner may rely upon Patent Owner's admissions to "supply a missing claim element." *Qualcomm Inc. v. Apple Inc.*, 24 F.4th 1367, 1376 (Fed. Cir. 2022). This paragraph provides an alternative basis for obviousness with respect to each of elements 18[pre]-18[d] below.

a. *18[Pre]*

If the preamble is limiting, the *Shamoon-Rainer* combination discloses it. EX1002, ¶¶102-104.

Shamoon discloses a thermostat system for controlling space conditioning equipment (HVAC/heating/air conditioning equipment). EX1004, ¶¶[0025], [0040], [0057].

b. *18[a]*

The *Shamoon-Rainer* combination discloses 18[a]. EX1002, ¶¶105-108.

Shamoon's thermostat system includes a "temperature probe 265" that "sends a signal to an analog to digital temperature converter 370, which sends a signal to

the microcontroller 300." *Id.*, ¶[0071]. It is shown in Figure 6:

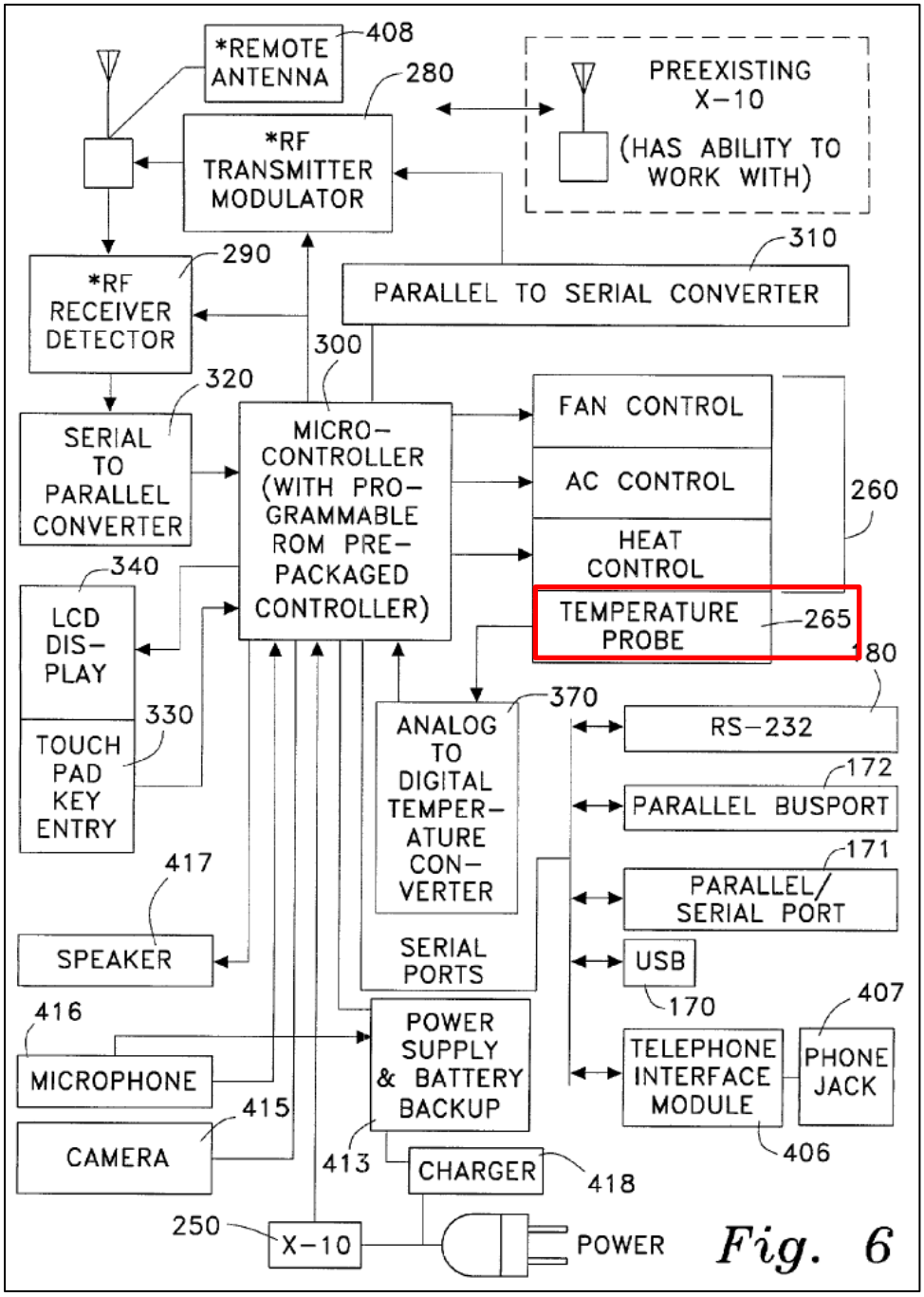

Id., Fig. 6 (annotated).

Shamoon's temperature sensor provides an electrical signal indicative of the temperature of a conditioned space in which the temperature sensor is situated.

EX1002, ¶107. The "temperature probe 265 also sends a signal to an analog to digital temperature converter 370 which sends a signal to the microcontroller 300." EX1004, ¶[0071].

Moreover, Inventor Rosen admits that the sensor is not inventive. EX1012, 289:14-24.

c. *18[b]*

The *Shamoon-Rainer* combination discloses 18[b]. EX1002, ¶¶109-115.

Shamoon discloses a liquid crystal display. EX1004, ¶¶[0040],[0061], [0065], [0070], Fig. 6; EX1002,¶110.

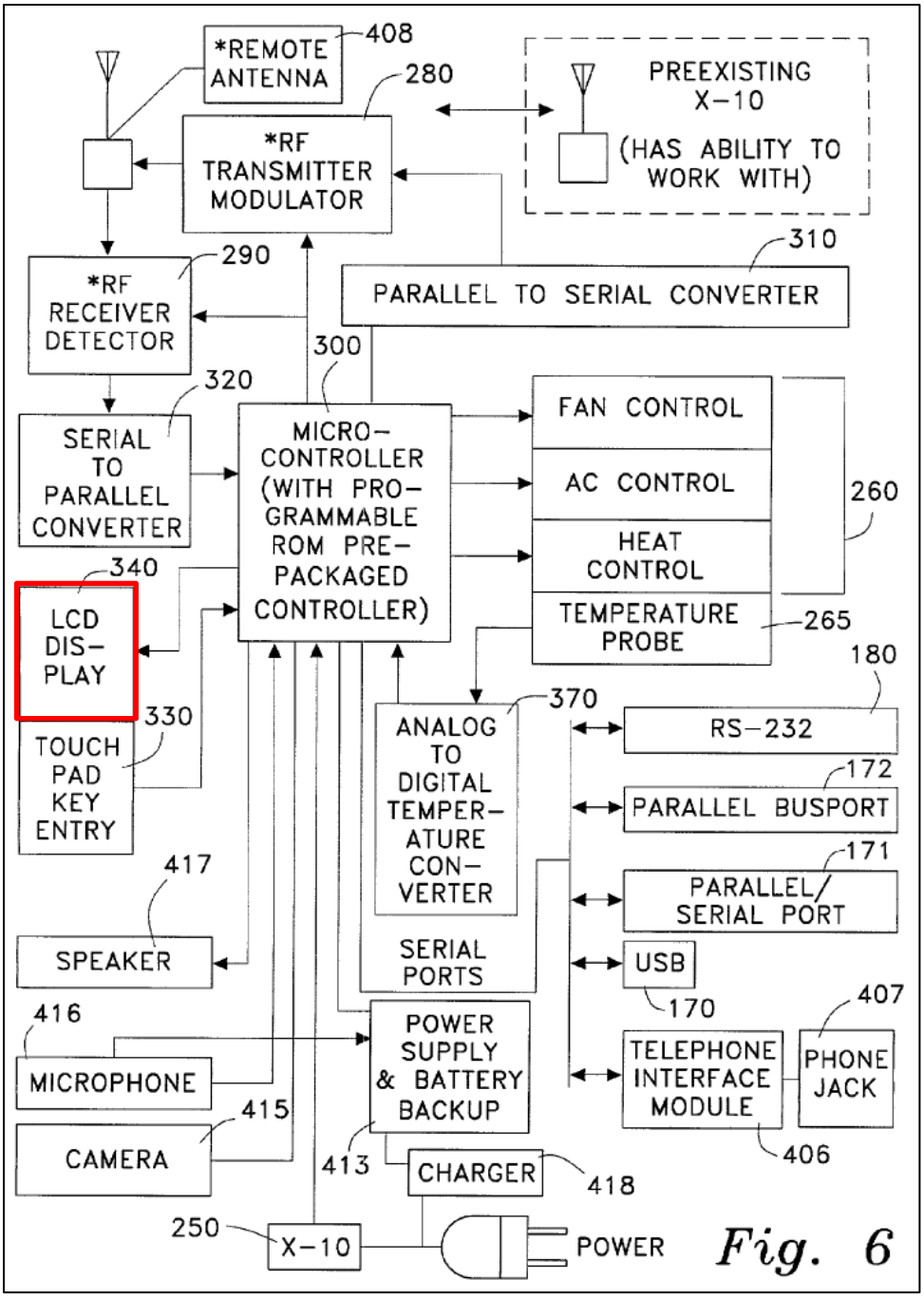

EX1004, Fig. 6.

Shamoon's LCD selectively displays an alphanumeric message. EX1002, ¶111. As show in Figure 2, the handheld controller, which "performs pretty much the same" as the "wall thermostat" (EX1004, ¶[0040]) displays alphanumeric

messages on the screen, such as the time and temperature settings. EX1004, Fig. 2; EX1002, ¶111. They are "selectively" displayed because they can be disabled. EX1004, ¶[0048]; EX1002, ¶111. The display can show "programming and messaging." EX1004, ¶¶[0040], [0070]. It would have been well known to a POSITA that software would be able to facilitate the selective display of an alphanumeric message by determining when to display it. EX1002, ¶111; EX1004, ¶[0066].

Additionally, *Rainer* discloses an LCD. EX1005, 5:47-52, Fig. 1; EX1002, ¶113. *Rainer*'s wall display unit "provides text-based onscreen instructions to the user, and instructions explaining control functions and facilitating user understandings of control settings and system operation." EX1005, 4:26-30. *Rainer*'s display also displays current utility price information and weather information received from an Internet communications link. *Id.*, 4:31-34, 5:37-41. A POSITA would have understood that not all of this information is displayed at once and, therefore, the display is selective. EX1002, ¶113.

It was common knowledge that thermostat systems would have included the ability to selectively display alphanumeric messages on an LCD, as acknowledged by the '555 Patent. EX1001, 1:48-55; EX1002, ¶114.

To the extent Patent Owner contends that the alphanumeric messages displayed must be received from the remote correspondent, the *Shamoon-Rainer* combination discloses this as addressed in 18[e]. *Infra*, §IX.A.2.i.

d. *18[c][1]*

Shamoon's microcontroller 300 is a processor. EX1002, ¶¶116-119.

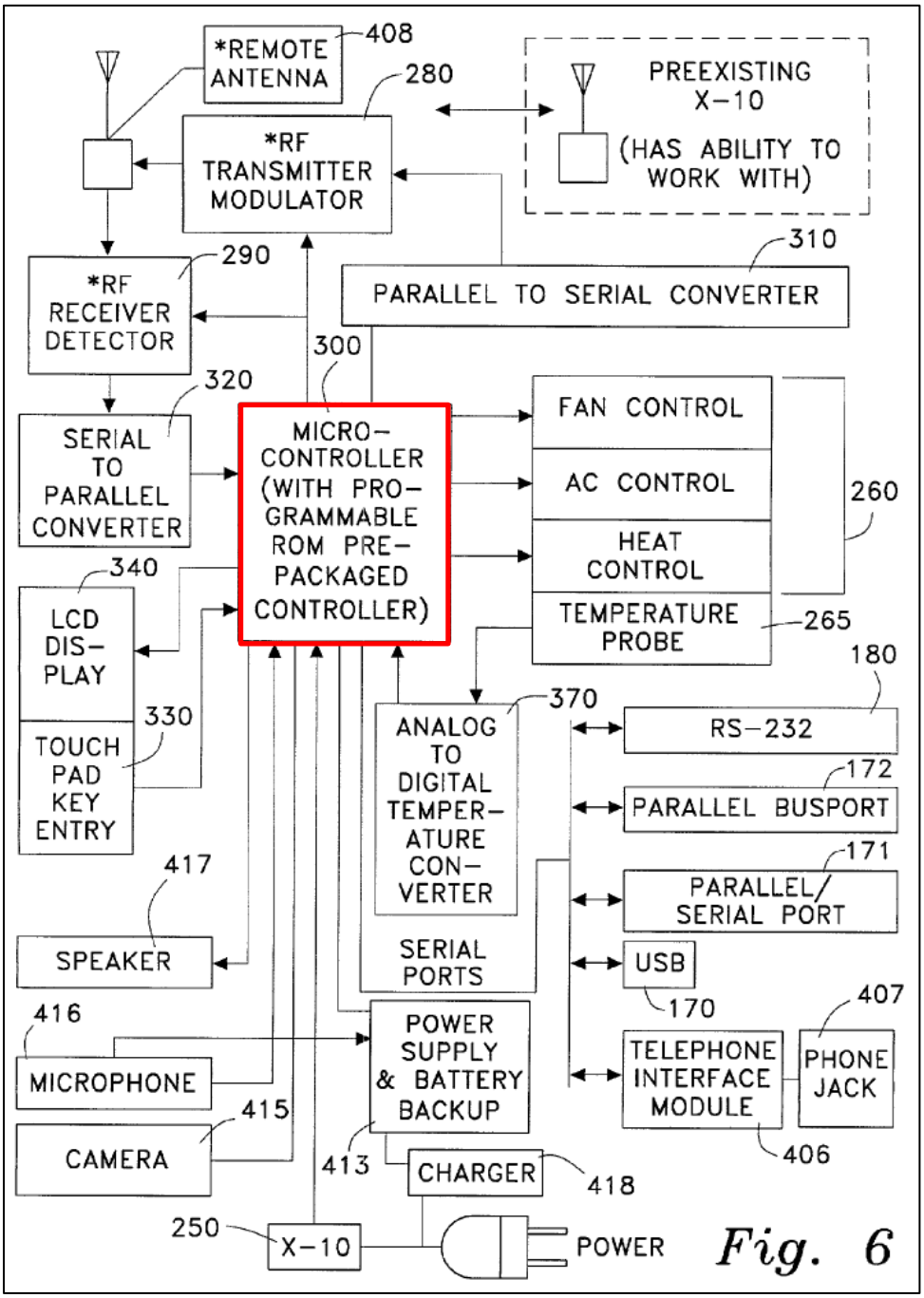

EX1004, Fig. 6, ¶[0040].

It would have been well known to a POSITA that a processor such as microcontroller 300 would have included a central processing unit. EX1002, ¶118.

Inventor Rosen agrees. EX1012, 101:14-20, 121:14-22. *Shamoon* discloses 18[c][1]. EX1002, ¶¶116-119.

Inventor Rosen admits that the ’555 Patent’s CPU or microprocessor is not inventive. EX1012, 287:22-24, 288:16-19.

e. *18[c][2]*

Shamoon’s processor includes a real time clock. EX1002, ¶¶120-123. *Shamoon* discloses a “***built-in clock on the thermostat*** and remote control apparatus 10.” EX1004, ¶[0074] [0059], Fig. 2. The thermostat is essentially the same. *Id.* ¶[0040].

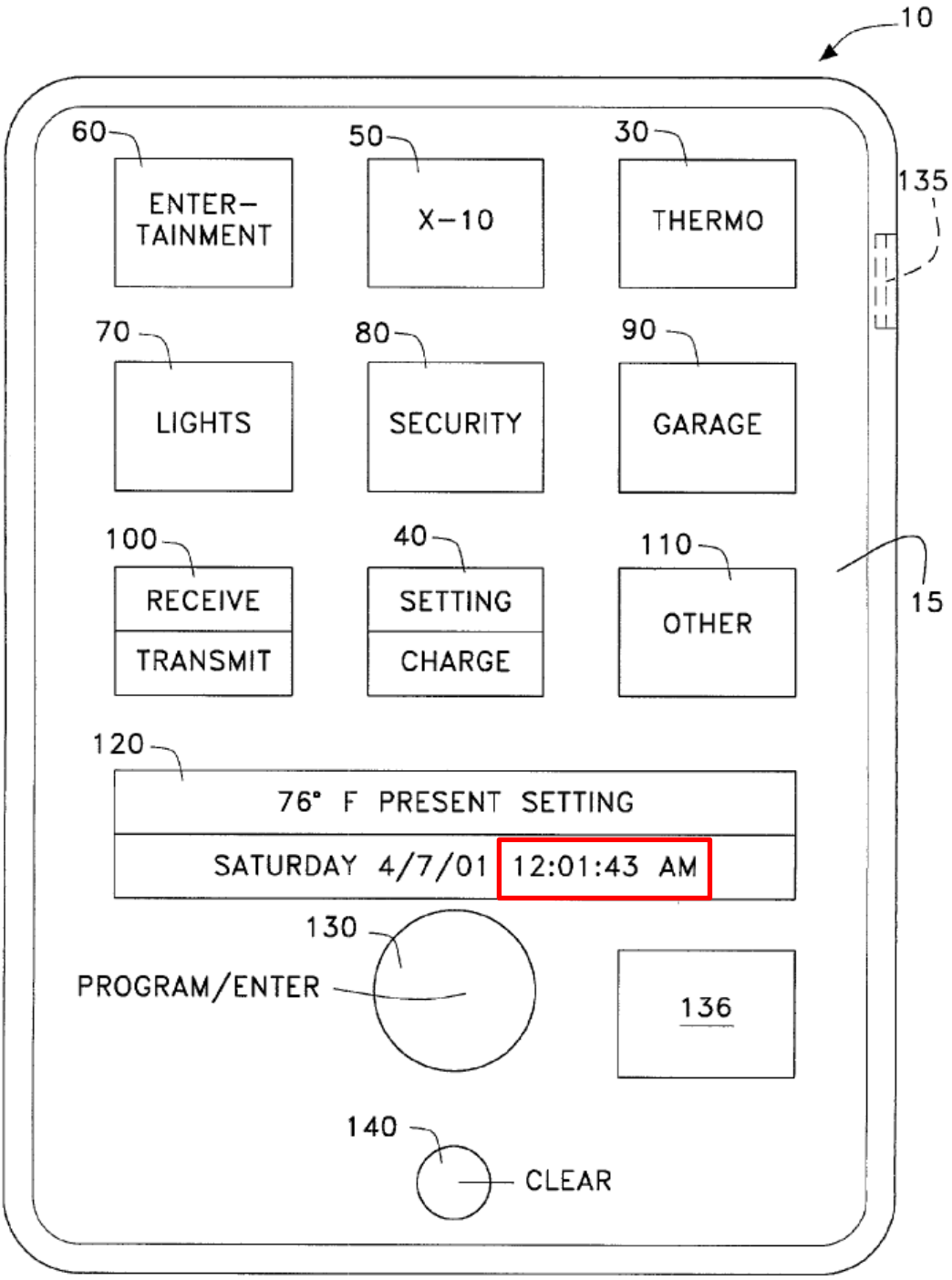

Fig. 2

A POSITA would have understood that *Shamoon*'s built-in clock is a real-time clock. EX1002, ¶122. *Shamoon* displays the date and time. *Id.*, Abstract, ¶¶[0019], [0048], [0059], [0069], [0073], [0075], Fig. 2. A POSITA would have

understood, based on *Shamoon*'s disclosure, that *Shamoon*'s built-in clock would have been included in *Shamoon*'s processor in order to read the current date and time for display on the thermostat's display. EX1002, ¶122. To the extent it is not in the processor, it would have been as Inventor Rosen agrees it was common knowledge that different functions of a system could be in the same chip or different chips. EX1012, 101:1-13.

Inventor Rosen admits that the real-time clock is not inventive. EX1012, 287:22-24, 288:8-11.

f. *18[c][3]*

The *Shamoon-Rainer* combination discloses 18[c][3]. EX1002, ¶¶124-128.

Shamoon's processor includes a memory. *Shamoon* discloses memory that is part of the microcontroller that runs programs to control the thermostat. EX1004, ¶[0060]. Inventor Rosen agrees that a prior art microcontroller would have included a memory. EX1012, 101:6-20; 121:14-22.

Shamoon's memory is coupled to the central processing unit. EX1002, ¶126; EX1004, ¶[0060]. *Shamoon* discloses that microcontroller "process[es] information and data." EX1004, Abstract, ¶[0019]. For a central processing unit to function, it must execute software instructions stored in a memory and because the microcontroller runs the thermostat, it would need the memory to function. A POSITA accordingly would have understood that the memory is coupled to a central processing unit. EX1002, ¶126.

The memory of *Shamoon*'s processor is for storing program and data information. EX1002, ¶127. The memory includes programs that run the thermostat. EX1004, ¶¶[0060], [0065]. A POSITA would have understood that the memory stores data because (a) *Shamoon* indicates that the microcontroller processes data, and (b) some of the memory is RAM which would not be needed if there were no data. EX1002, ¶127; EX1004, Abstract, ¶¶[0019], [0054], [0060].

It would have been well known to a POSITA that thermostat systems include a memory storing a program and that is programmable so that the thermostat set points may vary with the day of the week (thus necessitating the storage of data), as acknowledged by the '555 Patent. EX1001, 1:28-55; EX1002, ¶128. Inventor Rosen admits that the memory is not inventive. EX1012, 287:22-288:7.

g. *18[c][4]*

(a) 18[c][4]/18[c][4][a]

The *Shamoon-Rainer* combination discloses these elements. EX1002, ¶¶129-143. The input/output unit is the combination of the structures disclosed for elements 18[c][4][a]-[c] discussed below and that discussion is incorporated by reference here. *Id.*; EX1004, ¶[0066]. It is not clear if Claim 18 requires the components of the input/output unit to be in a single chip. Whether *Shamoon's* unit is one chip or multiple chips is irrelevant. At the very least this element would have been obvious because, as Inventor Rosen admits, a POSITA would have understood that different functions can be combined into a single chip or separated

among multiple chips in a microprocessor system. EX1012, 101:6-16; EX1002, ¶¶130, 143. Providing the input/output unit in a single chip would have been nothing more than a simple design choice. EX1002, ¶¶130, 143. The '555 Patent's sensor input and input/output unit are not inventive. EX1012, 287:22-24, 289:18-21, 290:8-11. It was common knowledge that thermostat systems would have included a sensor input and control output, as acknowledged by the '555 Patent. EX1001, 1:28-55; EX1002, ¶¶130, 143. The '555 Patent admits "all the processor components" are available off the shelf. EX1001, 3:54-60. It accordingly would have been obvious to implement the input/output unit using an off the shelf component. EX1002, ¶¶130, 143.

Turning to the sensor input, *Shamoon*'s microcontroller receives electrical signals from a temperature sensor 265 through analog to digital converter 370. EX1004, ¶[0071]. The circuitry within the microcontroller that receives the signal and/or that circuitry in combination with converter 370 are a sensor input that forms part of the input/output unit. EX1002, ¶¶132-133.

Shamoon's sensor input is "coupled to said temperature sensor for receiving said electrical signal therefrom." EX1002, ¶133. As discussed in 18[a], *Shamoon's* temperature probe 265 connects to analog to digital converter where the temperature sensor analog signal is converted to a digital signal sent to the microcontroller. EX1004, ¶¶[0040], [0071], Fig. 6. The circuitry that forms the sensor input (*see* prior paragraph) is coupled to the temperature sensor as shown in

Figure 6, and receives an electrical signal therefrom as required by 1[i]. EX1004, Fig. 6, ¶[0071].

(b) 18[c][4][b]

The *Shamoon-Rainer* combination discloses 18[c][4][b]. EX1002, ¶¶135-136.

Shamoon's input/output unit also has a control output coupled to the space conditioning equipment for issuing control signals. *Shamoon's* thermostat includes "fan control," "AC [Air Conditioning] Control," and "heat control," as illustrated in Figure 6. EX1004, Fig. 6. The fan, air conditioning and heat as controlled by *Shamoon's* system are examples of space conditioning equipment. EX1012, 96:5-8. *Shamoon's* "microcontroller 300 [] sends a signal to the fan control, air conditioning control and heat control of the thermostat 260," and thus, the microcontroller has circuitry that is a control output for issuing control signals to the space conditioning equipment. EX1004, ¶[0071]. A POSITA would have understood that circuitry within the microcontroller that generates these signals for control qualifies as the claimed control output for this element. EX1002, ¶136. A POSITA would have further understood or it is at least obvious that control output is "coupled to the space conditioning equipment for providing control signals thereto." *Id*. In the absence of such a coupling, the thermostat could not control the space conditioning equipment. *Id*.

(c) 18[c][4][c]

The *Shamoon-Rainer* combination discloses 18[c][4][c]. EX1002, ¶¶137-142.

Shamoon discloses a "web-based thermostat" and that microprocessor 300 may be connected via bus 530 to the Internet and a separate server. EX1004, ¶[0083], Fig. 7. *Shamoon* also discloses that "microcontroller 300 is also directly linked to a USB port 170 and a RS-232 port 180." *Id*., ¶[0062]. Thus, there is circuitry within microcontroller 300 that is used to establish bidirectional communications when the thermostat is connected to the Internet, thus disclosing 18[c][4][c]. EX1002, ¶139.

A POSITA would have understood that connection via a bus or port to the Internet is a "communications interface that is adapted to establish bi-directional communications." EX1002, ¶140. The '555 Patent states that the "communications interface" may be a "conventional serial port." EX1001, 3:29-30. It would have been well known to a POSITA that an Internet connection is adapted to establish bi-directional communications. EX1002, ¶140. For example, an Internet connection would have involved sending information to an Internet server and receiving information from that server, for example to interact with websites on the Internet. *Id*.

Rainer also discloses a communications interface. EX1005, 5:28-31, 4:31-34, Fig. 1 (link 32). *Rainer*'s communications link (link 32) connects directly to the processor. *Id*., Fig. 1, 6:14-19, 7:15-19. *Rainer* discloses obtaining "current

utility price information" and weather information using the Internet communications link. *Id*., 4:31-34, 5:37-41. A POSITA would have understood based on *Rainer*'s disclosure that *Rainer*'s thermostat connects to a remote correspondent (or 2) (web server) which is a source of current information (current utility price/weather information) using the disclosed communications interface in a bidirectional manner, thus disclosing 18[c][4][c]. EX1002, ¶141; EX1015, 685-686.

To the extent that Patent Owner contends this element is missing, it would have been obvious to a POSITA. EX1002, ¶142. The communications interface is not inventive. EX1012, 290:19-291:14. As discussed, connecting a thermostat to the Internet would have been obvious. EX1002, ¶¶61-62, 142; *supra* §VIII.A. Doing so obviously would have involved a communications interface adapted to establish bidirectional communications. EX1002, ¶142.

h. *18[d]*

The *Shamoon-Rainer* combination discloses 18[d]. EX1002, ¶¶144-152.

(a) Function

Shamoon-Rainer discloses the claimed function of "coupling the communications interface with the remote correspondent." EX1002, ¶¶144-146. As discussed above, *Shamoon* discloses microcontroller connected to the Internet and interfacing with server 500. EX1004, ¶[0083], Fig. 7. *Shamoon* also discloses that "microcontroller 300 is also directly linked to a USB port 170 and a

RS-232 port 180." *Id*., ¶[0062], Fig. 6. A POSITA would have understood that to be coupled to a server over the Internet, the communications interface is necessarily coupled to a remote correspondent. EX1002, ¶145. Without a coupling, no data exchange could occur. *Rainer* also discloses a communications link connecting the thermostat to the Internet. EX1005, 5:28-31, Fig. 1 (link 32). *Rainier* indicates that the communications link receives weather information and utility price information. EX1005, 5:38-41, 5:31-34. In order to receive such information, it necessarily would require coupling the communications interface to a remote correspondent (the source of the information). EX1002, ¶146.

(b) Structure

Shamoon-Rainer discloses the corresponding structure of "a serial link and/or data link and any equivalents." As discussed for the function, *Shamoon* discloses bus 52 connecting to the Internet, as well as USB ports and RS-232 ports. EX1004, ¶¶[0062], [0084], Fig. 7; EX1002, ¶¶147-148. *Rainer* discloses communications link 32 connecting to the Internet to "connect[] to outside data sources." EX1005, 5:28-31, Fig. 1 (link 32). A POSITA would have understood that *Rainer*'s link 32 connected to outside data sources through the Internet comprises a "data link." EX1002, ¶149.

A POSITA would have understood that to connect to the Internet, there necessarily must be some connection between the communications interface and the Internet. EX1002, ¶151. The '555 Patent teaches that a modem is used to connect

to an Internet service provider that completes the connection in "usual manner," thus admitting this element is obvious as common knowledge. EX1001, 6:1-11, EX1002, ¶151; EX1005, 5:28-31; EX1019, 1:19-30, 5:26-30; EX1023, 2, 27; EX1026, Abstract, 2:26-44, 4:38-52, 5:15-27, 5:34-38, 6:56-7:5; EX1037, 50-51. The combination of structures between the communications interface and the web server, which includes the Internet, forms a data link between them. EX1002, ¶151. To the extent Patent Owner contends that any of the structures disclosed by the references do not disclose an identical structure to the "data link" that Patent Owner contends is the corresponding structure, they at least disclose structures that are an insubstantial difference. *Id*., ¶152.

i. *18[e]*

The *Shamoon-Rainer* combination discloses a program stored in said memory for displaying messages received from the first remote correspondent (server 500). EX1002, ¶¶153-162. As discussed for 18[c][3], *Shamoon* discloses a memory for storing program information. *Supra*, §IX.A.2.f. *Shamoon* discloses a "web-based thermostat" (*id.*, ¶[0083]) and that "[a] principal thrust of the invention is to eliminate the need for a PC for the many and myriad applications" (EX1004, ¶[0039]). Based on *Shamoon*'s disclosure, it would have been obvious to a POSITA to modify *Shamoon*'s smart thermostat to include a program that displays information (*e.g.*, in the form of messages) received from the remote correspondent (*e.g.*, the web server). EX1002, ¶154.

Shamoon also discloses that messages are displayed on said liquid crystal display. *Shamoon* discloses an LCD that displays messages as detailed for 18[b]. *Supra*, §IX.A.2.c. A POSITA would have understood that the messages received from the remote correspondent (web server) in the *Shamoon-Rainer* combination would have been displayed on *Shamoon*'s LCD. EX1002, ¶155. A POSITA further would have understood that *Shamoon*'s smart thermostat and remote control apparatus, including the display, would have included a program stored in said memory for displaying messages. *Id*. At the very least, it would have been obvious for software to cause display of the messages because the most common way to control information content on a display is by the use of software. *Id.*

Rainer also discloses that the "current utility price information" obtained via the Internet communication link is displayed on the thermostat's user interface. EX1005, 5:28-31, 5:37-41. A POSITA would have understood that computer software stored in the memory of *Rainer* causes that information to be displayed. EX1002, ¶156. The information displayed on an LCD display is almost always under control of computer software, making the use of software for display at least obvious, if not the only alternative. *Id.* A POSITA would have understood that "current utility price information" does not pertain to the operation of the thermostat. EX1002, ¶¶157-159.

The '555 Patent does not define what is meant by not "pertaining to the operation of the thermostat," but it provides the example of displaying weather

information. EX1001, 4:10-15, 4:45-48. The limitation was added during prosecution to distinguish prior art that caused the thermostat to display a prestored message on the operating status of the thermostat. In distinguishing that art, Applicant referred to displaying weather as an example of something the claim would cover. EX1003, 73. Patent Owner alleges in its infringement contentions that weather information meets this limitation. EX1017 Ex. A, 17-18. Inventor Rosen agrees. EX1012, 294:4-296:24. However, the '555 Patent expressly teaches that the weather information can be used for control purposes and impacts thermostat operation. EX1001, 6:19-45. Apparently, if weather forecast information is displayed on the screen, even though it may be used for control, that meets the claim limitation. EX1002, ¶159.

Rainer obtains weather information from "weather services" using the Internet communications link for "display purposes." EX1005, 5:28-31, 4:31-34; EX1002, 160. Not only would a POSITA have known that the weather could just be used for display purposes as an option, but displaying it along with control meets the claim limitation consistent with the specification and prosecution history discussed above. *Id.*

Given the common knowledge of a POSITA that a variety of information can be displayed by thermostats, *supra*, §VIII.A, 1[d] is obvious because most or all of the information that the prior art displays does not pertain to the operation of the thermostat. EX1002, ¶162. Indeed, the thermostat could simply be used for

"surfing" the Internet. EX1022, 55:49-57.

Moreover, *Shamoon* discloses receiving various other forms of information that do not pertain to the operation of the thermostat. EX1004, ¶¶[0077]-[0081]; EX1002, ¶161.

3. Claim 20

The *Shamoon-Rainer* combination discloses claim 18. *Supra*, §IX.A.2. The combination also discloses or renders obvious Claim 20. EX1002, ¶¶144-164. *Shamoon* discloses a "web-based thermostat" connected to the Internet. EX1004, ¶[0083]; Fig. 7. *Rainer* also disclose a thermostat connected to the Internet. EX1005, 5:28-31; Fig. 1. As detailed in 18[d]-[e], the *Shamoon-Rainer* combination discloses the communications between said first remote correspondent (web server) and said communications interface are carried out via the Internet. *Supra*, §IX.A.2.h-i.

B. Ground 2: Claims 18 and 20 are obvious over *Inoue* in view of *Peters* and *weather.com*.

To the extent that Patent Owner attempts to swear behind *Shamoon*, the challenged claims are also rendered obvious by the *Inoue-Peters-weather.com* combination. To summarize, this theory posits that the claims read on a late 1990s/early 2000 laptop accessing weather.com because the laptop is also a thermostat system.

1. A POSITA Would Have and Could Have Combined *Inoue* with *Peters*

A POSITA would have been motivated to combine *Inoue* with *Peters*. EX1002, ¶¶168-174. *Inoue* and *Peters* are analogous art and address similar problems of temperature control in laptop computers. EX1006, ¶¶[0001]-[0016], Fig. 1; EX1007, Abstract, 1:15-22, 3:41-4:6.

A POSITA would have been motivated to modify *Inoue*'s laptop computer to incorporate *Peters*'s exterior temperature sensor to monitor the temperature outside of the CPU. EX1002, ¶¶169-172. *Inoue* discloses a thermal sensor that "measure the temperature within the enclosure of the electronic apparatus" and when there is an increase in temperature of a certain threshold, *Inoue*'s cooling fan generates air to cool the temperature in the device. EX1006, ¶¶[0002], [0011], [0015], [0013], [0029], [0038]. *Peters* discloses a temperature sensor that measures the temperature outside of the CPU. EX1007, Abstract, 4:7-31, 5:32-53, 6:12-21; EX1006, ¶[0020], Fig. 1. In light of *Inoue*'s teachings of monitoring and cooling the temperature inside of the laptop's main enclosure, a POSITA would have been motivated to look to *Peters* for implementation details regarding the location, coupling, and thermal control logic related to *Peters'* second temperature sensor that measures the temperature outside of the CPU. EX1002, ¶169.

A POSITA would have recognized and been motivated by the express benefits of such a combination in order to control not only the temperature of the CPU itself

but also the laptop's main enclosure, which a POSITA would have recognized contains not only the CPU but other components also in need of temperature control. *Id*.

Peters also teaches the benefits of its system for "reduc[ing] or minimiz[ing] the annoyance caused by a fan turning on and off often in a relatively short period of time" and conserving power. EX1007, 3:41-47. A POSITA would have recognized that conserving battery power and minimizing fan annoyances improve the consumer experience, and would have been motivated by design and market forces to modify *Inoue* in view of *Peters* to achieve these benefits. EX1002, ¶171. A POSITA also would have been motivated to not have the laptop computer fail due to excessive heat, and would have been motivated by design and market forces to minimize laptop computers getting too hot in consumers' laps. *Id*.

A POSITA would have had a reasonable expectation of success with combining *Inoue* with *Peters*. *Inoue* and *Peters* are complimentary laptop cooling systems using a combination of sensors, thermal control logic, and fans to monitor and control temperature in the laptop computer. EX1006, ¶¶[0001]-[0002], [0013], [0015], [0020], [0029], [0038], Fig. 1; EX1007, Abstract, 2:65-3:8, 3:50-4:31, 5:20-52, 6:12-21, 7:5-10, 13:24-48, 16:52-65, Fig. 1. In light of *Inoue*'s express teachings of a thermal sensor that "measure[s] the temperature within the enclosure of the electronic apparatus," a POSITA would have recognized that *Peters*'s temperature sensor measuring temperature exterior to the CPU would have been

readily incorporated into *Inoue*'s laptop computer without substantial modification or undue experimentation. EX1002, ¶172. Such a combination would have involved combining prior art elements (sensors) according to known methods (measuring temperature in a space) to yield predictable results (environmental control of a substantially enclosed space). *Id*.

A POSITA also would have been motivated to incorporate *Peters*'s graphical controller rendering data structures from memory for display. EX1007, 8:39-65. *Inoue* discloses an LCD display. EX1002, ¶¶173-174; EX1006, ¶¶[0020]-[0021], Fig. 1. In light of *Inoue*'s teachings, a POSITA would have been motivated to look to *Peters* for implementation details regarding the display of "[p]rocessing and/or results of execution of application software." *Peters* discloses a graphics controller 123 that renders data structures from main memory for display. EX1007, 8:39-49.

A POSITA would have had a reasonable expectation of success with combining *Inoue* with *Peters*. *Inoue* and *Peters* are complimentary laptop systems both with memories for storing programs or applications and data, as well as LCD displays. EX1006, ¶¶[0020]-[0021], [0025], Fig. 1; EX1007, 8:24-38. A POSITA would have recognized that Peters's graphics controller would have been readily incorporated into Inoue's laptop computer for display of data stored in memory without substantial modification or undue experimentation. EX1002, ¶174. Such a combination would have involved combining prior art elements (graphics controllers, memory, and LCD displays) according to known methods

(rendering data from memory for display) to yield predictable results (display of data). *Id*.

2. A POSITA Would Have and Could Have Combined *Inoue* and *Peters* with weather.com.

A POSITA would have been motivated to combine *Inoue-Peters* with *weather.com*. EX1002, ¶¶175-179. *Inoue-Peters* and *weather.com* are analogous art in the same field of endeavor of computing and data networks such as the Internet. EX1006, ¶¶[0001]-[0016], Fig. 1; EX1007, Abstract, 1:15-22, 3:41-4:6.

A POSITA would have been motivated to combine *Inoue-Peters* with *weather.com* to obtain current information (weather) from a remote correspondent (weather.com web server) to display on *Inoue-Peters*'s display. EX1002, ¶¶175-179. It would have been well known and a matter of common sense to a POSITA to use a laptop connected to the Internet to obtain current information (*e.g.*, weather) from a weather website. *Id*. It would have been obvious to do so because users of devices connected to the Internet often desire to know about the weather in their particular area. *Id*. A POSITA would have recognized that this is the purpose and benefit of a weather website such as *weather.com*. *Id*. Moreover, accessing weather.com on a laptop computer is a well-known and conventional method for retrieving local weather information using location data. *Id*. The '555 Patent admits that weather information sources are "widely available" and "routinely accessed." EX1001, 4:13-15. Thus, accessing a website such as weather.com

using *Inoue-Peters*'s laptop would be doing something that is common.

A POSITA would have had a reasonable expectation of success in combining *Inoue-Peters* with *weather.com*. EX1002, ¶¶178-179. As noted, the '555 Patent admits that weather information sources are widely accessed on the Internet. A POSITA would understand that a laptop is a common way to do so. EX1002, ¶178. *Inoue*'s laptop computer executes software, and it would have been common knowledge to a POSITA that such software would have included web browsers. EX1006, ¶¶[0021], [0025], [0027]; EX1002, ¶178; EX1035, Abstract, 3:8-49, Figs. 1-2; EX1036, 4:4-5:5; EX1037, 50. *Weather.com* is a website accessible on the Internet, such as through a web browser. EX1002, ¶¶82-85, 178. Executing a browser on *Inoue-Peters*'s laptop computer to use *weather.com* would have involved combining well known prior art elements (websites and computers) according to known methods (accessing the Internet) to yield predictable results (retrieving the local weather). EX1002, ¶178. A POSITA would have understood that *Inoue-Peters* already includes the software and hardware to implement *weather.com*'s teachings. *Id*.

3. Claim 18

Each of the eleven elements 18[Pre]-18[d] are disclosed by *Inoue-Peters*, as discussed below. To the extent Patent Owner disagrees, each of these elements is also common knowledge of a POSITA as admitted by the '555 Patent. EX1001, 1:18-64, 4:31-60; 4:13-15, 6:1-10; EX1002, ¶¶65-72, 165-167. Petitioner may rely

upon Patent Owner's admissions to "supply a missing claim element." *Qualcomm*, 24 F.4th at 1376. This paragraph provides an alternative basis for obviousness with respect to each of elements 18[pre]-18[d] below.

a. *18[Pre]*

If the preamble is limiting, the *Inoue-Peters-weather.com* combination discloses it. EX1002, ¶¶180-183.

The *Inoue-Peters-weather.com* combination discloses a thermostat system controlling space conditioning equipment. *Inoue* discloses a laptop that controls the temperature inside the laptop. EX1006, Abstract, ¶¶ 0001], [0006]-[0008]. Thus, *Inoue*'s laptop is a thermostat system. EX1002, ¶¶180-183.

Inoue also discloses controlling space conditioning equipment. *Inoue*'s CPU controls the temperature. EX1006, ¶¶[0001]-[0002], [0008]-[0010], [0011]. It does so by controlling a cooling fan. EX1006, ¶¶[0002], [0015], [0029], [0038]. Inventor Rosen agrees that a fan is space conditioning equipment. EX1012, 96:5-8, 322:10-12. *Inoue* accordingly controls space conditioning equipment (a fan) in response to temperature measurements, and, therefore, is a "thermostat system." EX1002, ¶182.

Peters also discloses a thermostat system for controlling space conditioning equipment. *Peters* discloses cooling of the computer system by controlling a fan. EX1007, Abstract, 3:50-4:6, 5:20-31, 7:5-10 13:24-48, 16:52-65, Fig. 1. The fan is "space conditioning equipment" that conditions the temperature inside the computer by cooling it. Id., 7:5-10, 13:24-48, 16:52-65; EX1002, ¶183. The laptop controls temperature using thermal control logic that responds to signals from multiple temperature sensors, and is thus a "thermostat system." *Id*., 2:65-3:8; 6:30-49, 7:40-59; EX1002, ¶183.

b. *18[a]*

The *Inoue-Peters-weather.com* combination discloses a temperature sensor. EX1002, ¶¶184-188. *Inoue* discloses a temperature sensor "to measure the actual temperature within the enclosure of the electronic apparatus." EX1006, ¶¶[0013], [0023], [0039]. The temperature sensor provides an electrical signal indicative of the temperature of a conditioned space in which the temperature sensor is situated. EX1002, ¶186; EX1006, ¶[0023].

Peters also discloses a temperature sensor for providing an electrical signal indicative of the temperature of a conditioned space in which the temperature sensor is situated. EX1002, ¶187. *Peters* discloses two temperature sensors, one of which measures the temperature of the CPU core and one that measures the temperature inside the enclosure. EX1007, Abstract, 4:7-31, 6:12-21. The latter sensor is able to measure the temperature of "a region away from the die 105, such

as an exterior region 109 of the CPU 102." EX1007, 5:32-52. This sensor measures the temperature of the "conditioned space in which the temperature sensor is situated." EX1002, ¶187. If the temperature of that space becomes excessive, the thermal control logic adjusts the fan speed. EX1007, 7:40-59. The temperature sensor is also coupled to the thermal control logic in order for it to adjust the fan speed. *Id.*; *supra*, §IX.B.3.a. A POSITA would have understood that the temperature data is provided in the form of an electrical signal. EX1002, ¶188.

c. *18[b]*

The *Inoue-Peters-weather.com* combination discloses 18[b]. EX1002, ¶¶189-193.

The *Inoue-Peters-weather.com* combination discloses an LCD. *Inoue* specifically discloses that the laptop includes an LCD display. EX1006, ¶[0020].

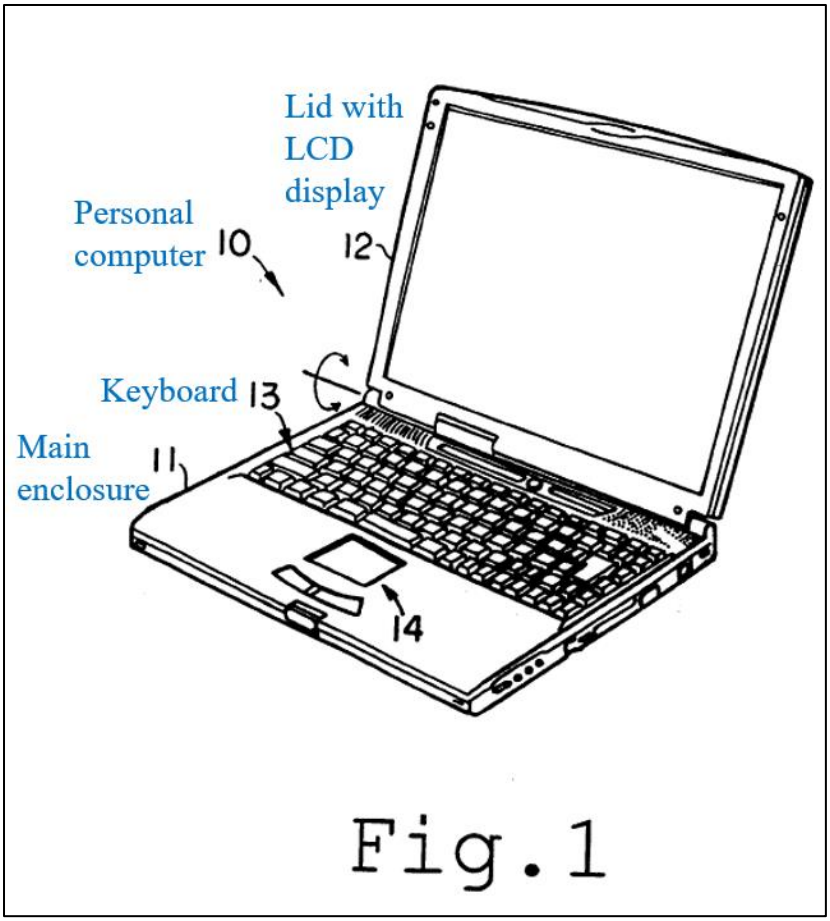

EX1006, Fig. 1 (annotated). As *Inoue* describes, "[p]rocessing and/or results of execution of the application software may be displayed on the screen of the LCD incorporated in the lid 12." EX1006, ¶[0021]. A POSITA accordingly would have understood that *Inoue*'s LCD screen would display alphanumeric messages, as would have been well known on laptop displays. EX1002, ¶190.

Peters also discloses a display as part of its computer system, such as display 125 on which "text and images" are rendered. EX1007, 8:3-4, 8:39-58, Fig. 1. Display 125 can be "a liquid crystal display ('LCD')." *Id.*, 8:59-65. *Peters*' display is therefore an LCD that displays an alphanumeric message. *Peters*' display does so "selectively" because the display of alphanumeric messages is

controlled by a graphics controller coupled to the north bridge of *Peters*' computer system. *Id*., 8:39-58. For example, as *Peters* discloses, data structures on display "can be effectively shifted into and out of main memory 124 via the expansion bus and North bridge 120." *Id*.; EX1002, ¶191.

A POSITA would have understood that messages are displayed "selectively" based upon whatever information the software determines should be displayed on the screen. EX1002, ¶192. This is standard operation of a laptop computer. *Id.* For example, when used with *Weather.com*, both *Inoue* and *Peters* would display a screen to obtain a zip code and then would selectively display the weather once the website returned the data. EX1002, ¶¶82-85, 192; EX1013, 5.

To the extent Patent Owner contends that the alphanumeric messages displayed must be received from the remote correspondent, the *Inoue-Peters-weather.com* combination discloses this as addressed in 18[e]. *Infra*, §IX.B.3.i.

d. *18[c][1]*

The *Inoue-Peters-weather.com* combination discloses a processor that includes a central processing unit. EX1002, ¶¶194-196. *Inoue* discloses a "notebook type personal computer 10 as an electronic apparatus," which includes "a central processing unit (CPU) and other electronic components are incorporated." EX1006, ¶[0020]. *Inoue* discloses a motherboard, illustrated below, that includes a CPU:

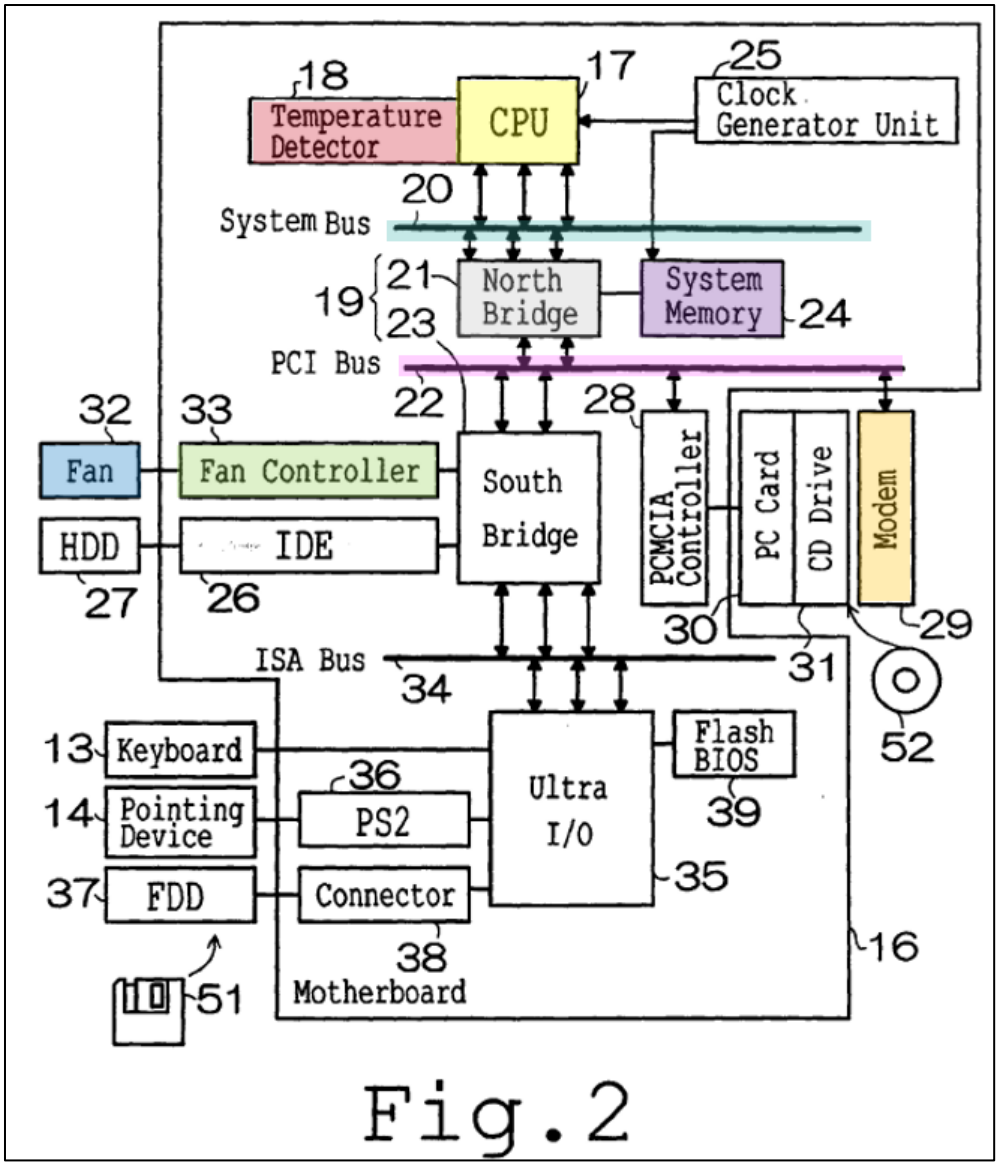

Fig.2

EX1006, Fig. 2 (highlighted). *Inoue*'s CPU executes application software. EX1006, ¶¶[0025], [0027] (referencing the CPU executing application software). A POSITA would have understood that the CPU is a part of a processor, the remaining elements of which are discussed below. EX1002, ¶195. The discussion of the processor components below is incorporated by reference.

Peters also discloses a processor that includes a CPU. *Peters* discloses a computer system with a "microprocessor or central processing unit ('CPU')" such

as CPU 102. EX1007, 1:25-26, Abstract, 2:15-33, 2:53-54, 2:65-3:28, 3:53-554:7-31, 5:8-13, 5:20-6:21, 7:25-39, 7:65-8:8, 8:18-23, 9:41-52, Figs. 1-2. This is a processor containing a CPU. EX1002, ¶196. Again, the remaining parts of the processor are discussed below.

e. *18[c][2]*

While neither *Inoue* nor *Peters* discuss a real time clock, that may be because it is so obvious to include one. EX1002, ¶¶197-198. It was common knowledge of a POSITA to use a real time clock in a portable computer. *Id.*; EX1028, 6:8-17; EX1027, 16:4-30, 132:32-54; EX1031, 2:12-26, 3:24-30, Fig. 1; EX1032, 11:23-28, 12:41-61, Fig; 1; EX1033, 4:55-60, 5:1-6, 6:36-40, Fig. 1; EX1034, 2:32-34, Figs. 88, 94, 97-99; EX1043, 96; EX1012, 121:11-121:22; *supra*, §VIII.A. One would be hard pressed to find a portable computer built in the 1990s or later that did not include a real time clock. EX1002, ¶197. Many laptops used the popular Microsoft Windows operating system. *Id.* This operating system puts a time stamp on files that indicates the last time the file was saved. *Id.*; EX1042, 249. A real time clock is necessary to create those time stamps. EX1002, ¶197 While a real time clock is useful for many purposes in a portable computer, one must be included for creating time stamps of when files were saved. Multiple prior art references establish the common knowledge that real time clocks were used in portable computers. Thus, this element is obvious based upon the common knowledge of a POSITA. EX1002, ¶197; EX1028, 6:8-17; EX1027, 16:4-30,

132:32-54; EX1031, 2:12-26, 3:24-30, Fig. 1; EX1032, 11:23-28, 12:41-61 Fig; 1; EX1033, 4:55-60, 5:1-6, 6:36-40, Fig. 1; EX1034, 2:32-34, Figs. 88, 94, 97-99; EX1043, 96; EX1012, 121:11-121:22. Inventor Rosen admits that the '555 Patent's real-time clock is not inventive. EX1012, 287:22-24, 288:8-15.

f. *18[c][3]*

Inoue-Peters-weather.com discloses 18[c][3]. EX1002, ¶¶199-203. *Inoue*'s processor includes a memory for storing program and data information. *Inoue* discloses memory such as "system memory unit 24" and "flash memory 39." EX1006, ¶[0025]. *Inoue* further discloses that "[w]hen the CPU 17 executes an application software, for example, the south bridge 23 serves to transfer programs and/or data, read out of the HDD 27, to the system memory unit 24." EX1006, ¶[0027]. A POSITA accordingly would have understood that "programs and/or data" are stored in *Inoue*'s memory. EX1002, ¶200.

The memory is coupled to the central processing unit through the North Bridge as illustrated in Figure 2:

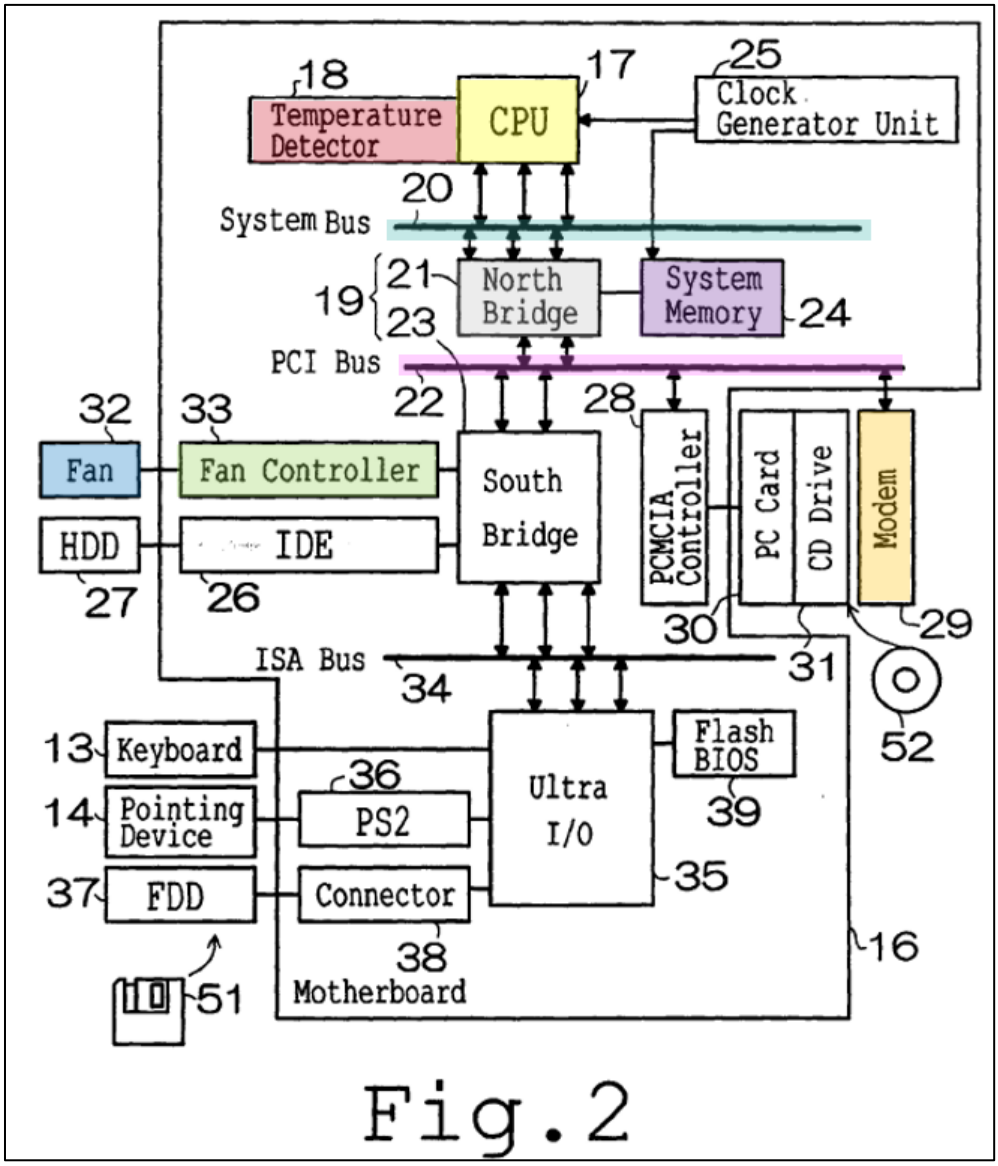

Fig.2

EX1006, ¶¶[0024]-[0025], Fig. 2 (highlighted).

Peters also discloses a processor including a memory coupled to said central processing unit for storing program and data information. *Peters* discloses that "main memory 124 functions as the working memory for the CPU 102 and the rest of the computer system 100 and generally includes a conventional memory device or array of memory devices in which application programs and data are stored."

EX1007, 8:24-38. A POSITA would have understood this as memory for storing program and data information. EX1002, ¶202. As illustrated in Figure 2, it is coupled to the CPU. *Id.*; EX1007, 4:7-31, 18:27-31, 19:1-4; 13:49-6, 14:63-15:21.

Inventor Rosen admits that the '555 Patent's memory is not inventive. EX1012, 288:5-11.

g. *18[c][4]*

(a) 18[c][4]-18[c][4][a]

The *Inoue-Peters-weather.com* combination discloses these elements. EX1002, ¶¶204-220. The input/output unit is the combination of the structures disclosed for 18[c][4][a]-[c] discussed below and that discussion is incorporated by reference here. *Id*. It is not clear if Claim 18 requires the components of the input/output unit to be in a single chip. Whether *Inoue's* or *Peters'* unit is one chip or multiple chips is irrelevant for the same reasons discussed in connection with Ground 1. *Supra*, §IX.A.2.g; EX1002, ¶220. This element is obvious for the same reason.

Turning to the sensor input, *Inoue's* processor includes an input/output unit that includes a sensor input coupled to a temperature sensor. *Inoue* discloses south bridge 23, which connects to temperature detector 18 (red) (which is a temperature sensor).

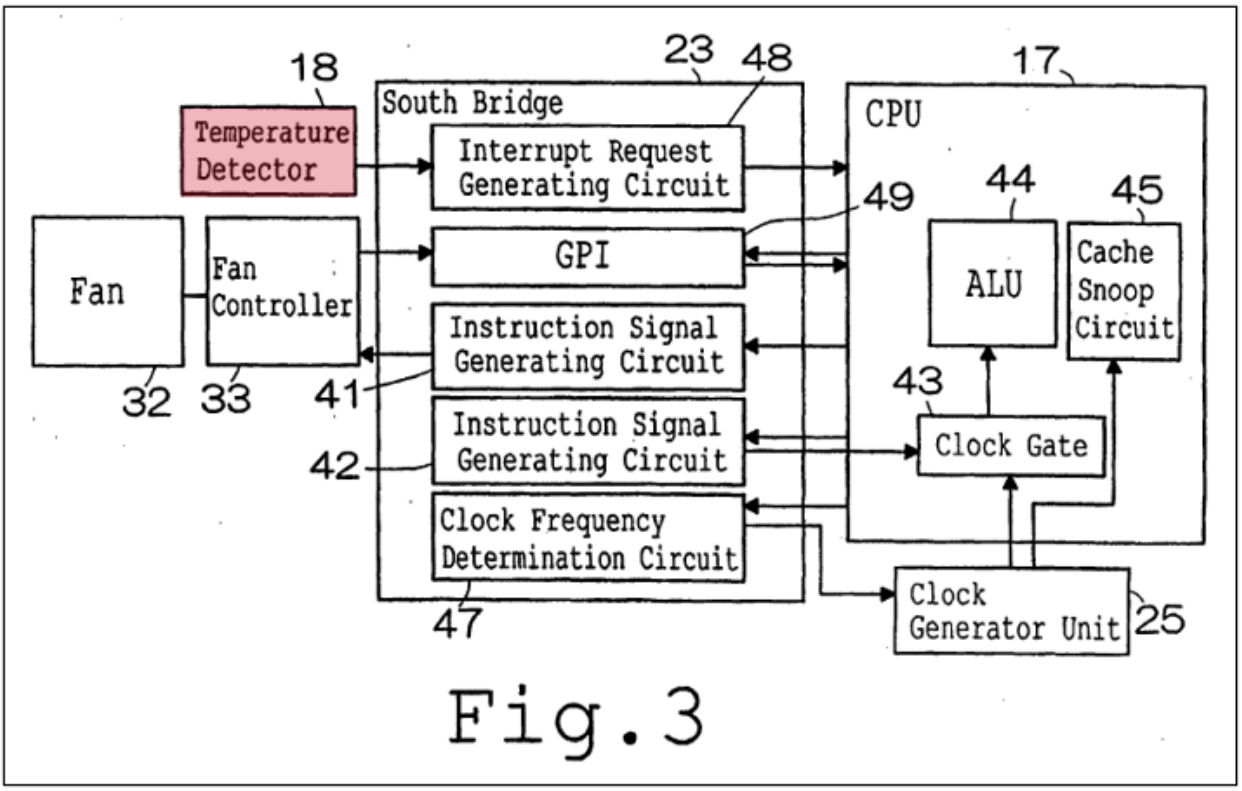

Fig.3

EX1006, Fig. 3, ¶[0019]. A POSITA accordingly would have understood that south bridge 23 interfaces to a temperature detector 18 thus coupling to a temperature sensor. EX1002, ¶206.

The sensor input receives the electrical signal from the temperature sensor. *Inoue* discloses that temperature detector or thermal sensor 18 "is designed to *generate a temperature information signal*." EX1006, ¶[0023]. A POSITA would have understood that this temperature information signal is an electrical signal from the temperature sensor that is received by the sensor input of *Inoue*'s south bridge. EX1002, ¶207.

As addressed in 18[a], *Peters* also discloses a temperature sensor (116) and a thermal control logic that controls a fan based on the monitored temperature in the

space outside of the CPU. *Supra*, §IX.B.3.b; EX1007, 5:52-6:11, 7:40-59. A POSITA would have understood that *Peters*'s express disclosure of the thermal control logic monitoring the temperature of sensor 116 would have involved a sensor input coupled to temperature sensor 116 for receiving the electrical signal therefrom. EX1002 ¶208.

(b) <u>18[c][4][b]</u>

The *Inoue* input/output unit includes a control output coupled to the space conditioning equipment. EX1002, ¶¶210-214. As illustrated in Figures 2 and 3, south bridge 23 connects to a fan controller 33 that controls the operation of cooling fan 32. EX1006, Figs. 2-3; ¶[0032]. A POSITA accordingly would have understood that south bridge 23 includes a control output coupled to the space conditioning equipment. EX1002, ¶211.

The control output issues control signals to the space conditioning equipment. EX1002, ¶212. South bridge 23 issues a control signal generated by generating circuit 41 to the fan controller 33, which then "control[s] the operation or rotation of the cooling fan 32 in accordance with the instruction and the number identified *in the fan instruction signal*." EX1006, ¶¶[0029], [0032].

Peters discloses a computer system having a "thermal control logic that efficiently cools the computer system," where "the thermal control logic couples to a CPU module and a fan." EX1007, Abstract, 3:50-4:6, 5:20-31, Fig. 1. Thermal control logic controls the fan (or fan 180), which conditions the temperature of the

laptop by cooling it. *Id*., 2:53-64, 6:30-49, 7:5-10, 7:40-59, 13:24-48, 16:52-65. A POSITA would have understood that the thermal control logic coupled to and controlling the fan (space conditioning equipment) would have involved a control output for issuing control signals to control the fan. EX1002, ¶213.

As discussed in the prior section, this element also would have been well known to POSITA. *Supra*, §IX.B.3.g.(a). Inventor Rosen admits that the control output for space conditioning equipment is not inventive. EX1012, 287:22-24, 289:3-13.

(c) 18[c][4][c]

The *Inoue-Peters-weather.com* combination discloses 18[c][4][c]. EX1002, ¶¶215-219.

The input/output unit includes a communications interface adapted to establish bi-directional communications between said processor and a first remote correspondent, such as weather.com. EX1002, ¶216. Weather.com is a source of current information—the weather. EX1002, ¶¶82-85, 216. As discussed, it would have been obvious to access weather.com using the laptop computers disclosed in *Inoue-Peters*. *Supra*, §IX.B.2.

Inoue discloses a modem 29 that "serves to connect CPU 17 to a network such as the Internet, an extranet, or the like." EX1006, ¶[0028]. Modem 29 is illustrated in Figure 2:

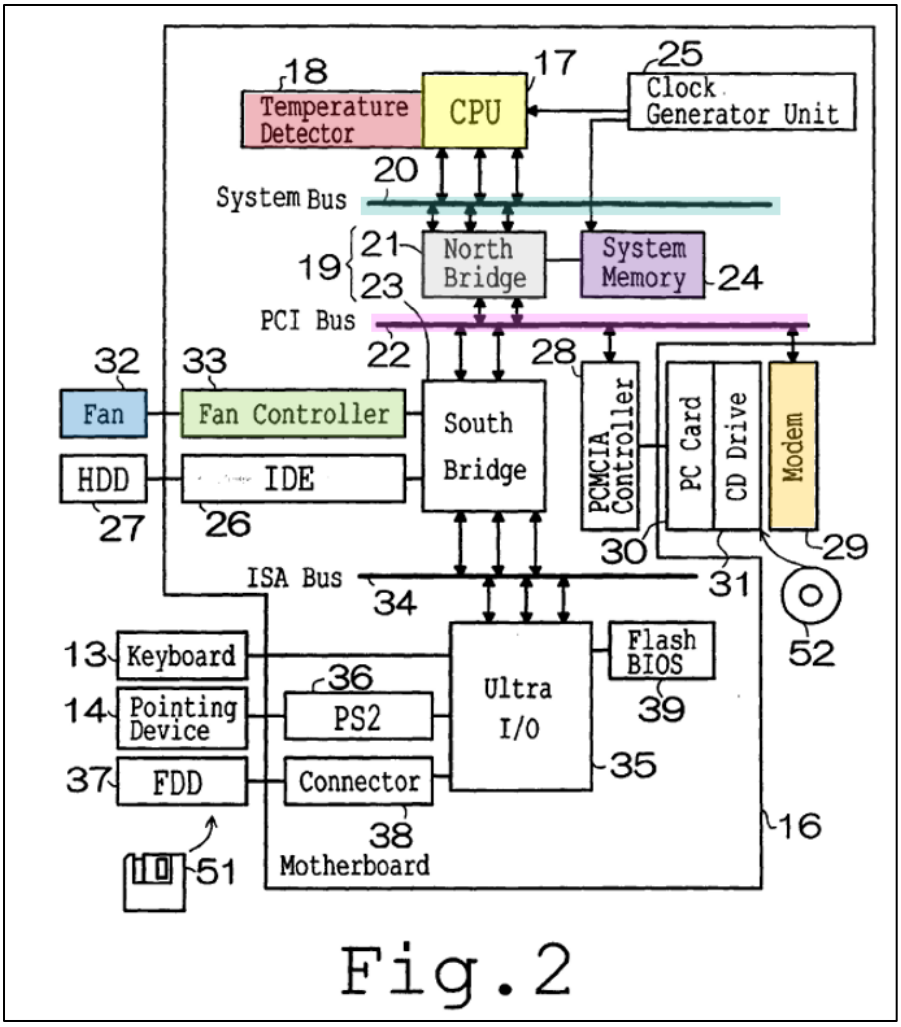

Fig.2

EX1006, Fig. 2 (highlighted). It would have been well known to a POSITA that a modem such as *Inoue*'s modem 29 connected to the Internet establishes bidirectional communication between *Inoue*'s CPU and an Internet server such as *weather.com*'s server (remote correspondent). EX1002, ¶217.

Inoue's modem 29 connects to its south bridge via a bus (PCI bus 22), as illustrated in Fig. 2. EX1006, ¶¶[0024], [0028], Fig. 2. A POSITA would have understood that circuitry in either the South Bridge or North Bridge circuit serves as a communications interface between the processor and modem establishing

bidirectional communications between the processor and first remote correspondent. EX1002, ¶218; EX1043, 95. Alternatively, the southbridge or northbridge in combination with the PCI bus 22 and modem 29 are the claimed communications interface. EX1002, ¶218. The input/output unit thus consists of the southbridge or northbridge, PCI Bus 22, and Modem 29. *Id*.

h. *18[d]*

The *Inoue-Peters-weather.com* combination discloses 18[d]. EX1002, ¶¶221-225.

(a) Function

The *Inoue-Peters-weather.com* combination discloses the claimed function of "coupling said communications interface with said remote correspondent." EX1002, ¶222. As detailed for 18[c][4][c], *Inoue* discloses a modem that connects the communications interface of the south bridge or north bridge to weather.com server via the Internet. *Id.*; *supra*, §IX.B.3.g.

(b) Structure

The *Inoue-Peters-weather.com* combination also discloses the corresponding structure of "a serial link and/or data link and any equivalents." A POSITA would have understood that there is a data link between the communications interface and the web server comprising the modem connected to the Internet. EX1002, ¶¶223-225; EX1015, 685-686.

i. *18[e]*

The *Inoue-Peters-weather.com* combination discloses a program stored in said memory for displaying messages from said first remote correspondent are displayed on said liquid crystal display. EX1002, ¶¶226-232. As detailed in 18[b], *Inoue* and *Peters* disclose an LCD. *Supra*, §IX.B.3.b. The *Inoue-Peters-weather.com* combination discloses displaying messages (*e.g*., weather information) from said first remote correspondent (weather.com server) on *Inoue-Peters*'s LCD. EX1002, ¶227; EX1008, 6, 9; EX1013, 5. When a user accesses weather.com on a laptop computer, such as *Inoue-Peters*'s laptop computer, weather.com sends data packets (messages) containing weather information, and that weather information is displayed on the screen of the laptop. EX1002, ¶¶82-85, 227; EX1008, 6, 9; EX1013, 5.

Inoue also discloses that "[w]hen the CPU 17 executes an application software . . . the south bridge 23 serves to transfer programs and/or data, read out of the HDD 21, to the system memory unit 24." EX1006, ¶[0027]. A well-known application software would have included a web browser to access the Internet, including weather.com. EX1002, ¶228; EX1035, Abstract, 3:8-49, Figs. 1-2; EX1036, 4:4-5:5; EX1037, 50; EX1012, 60:9-15, 61:12-19. A POSITA would have understood that in order to display such messages, *Inoue* would have included a program stored in memory for displaying messages. EX1002, ¶228. Display of the information received from weather.com would have involved a program stored

in memory, such as a web browser. *Id.*; EX1035, Abstract, 3:8-49, Figs. 1-2; EX1036, 4:4-5:5.

Peters also discloses a program stored in said memory for displaying messages from said first remote correspondent are displayed on said liquid crystal display. As detailed in 18[b], *Peters* discloses an LCD for displaying textual information. *Supra*, §IX.B.3.c. As detailed in 18[c][3], *Peters* discloses memory such as main memory 124. *Supra*, §IX.B.3.f. *Peters* discloses that data structures for display on display 125 are "effectively shifted into and out of main memory 124 via the expansion bus and North bridge 120." EX1007, 8:39-58. It would have been well known to a POSITA that shifting data structures into and out of memory for display would have involved a program stored in memory for displaying messages. EX1002, ¶229.

The received messages do not pertain to the operation of said thermostat system. *Supra*, §IX.A.2.i. As explained above, Patent Owner has taken the position repeatedly that weather information satisfies the limitations of the claim. *Supra*, §IX.A.2.i. Thus, the weather information from weather.com are "messages received from said first remote correspondent, which received messages do not pertain to the operation of the thermostat system." EX1002, ¶230.

To the extent Patent Owner disagrees this element is disclosed by the combination, it would have been obvious based upon the common knowledge of a POSITA. It was common knowledge of a POSITA that web browsers were used

in laptop computers to access websites such as weather.com and display messages received from web servers on the laptop's LCD. EX1002, ¶232; EX1035, Abstract, 3:8-49, Figs. 1-2; EX1036, 4:4-5:5; EX1037, 50; EX1041, 82, 93; EX1012, 60:9-15. The messages received from web servers contain information that does not pertain to the operation of the thermostat. EX1002, ¶230. At the very least, it would have been obvious for software to cause display of the messages because the most common way to control information content on a display is by the use of software. EX1002, ¶232.

4. Claim 20

The *Inoue-Peters-weather.com* combination discloses Claim 18. *Supra*, §IX.B.3. For the reasons discussed above, Claim 20's new elements are disclosed by *Inoue*. EX1006, ¶[0028], Fig. 2; *supra*, §IX.B.3(g)-(h). Moreover, weather.com is an Internet web server so it would have been accessed over the Internet. EX1002, ¶¶233-234.

C. Ground 3: Claims 18 and 20 are obvious over *Glorioso* and *Shah*.

To the extent Patent Owner finds flaws with the *Inoue-Peters-weather.com* combination and attempts to swear behind *Shamoon*, the challenged claims are nonetheless rendered obvious by the *Glorioso-Shah* combination.

1. A POSITA Would Have and Could Have Combined *Glorioso* with *Shah*

A POSITA would have been motivated to combine *Glorioso* with *Shah*. EX1002, ¶¶238-253. *Glorioso* and *Shah* are analogous art—both thermostat systems

connected to communication networks. EX1009, 2:54-3:8, 3:8-39, 4:1-4, Fig. 1; EX1010, Abstract, 3:44-65, Fig. 1.

Glorioso does not indicate what type of display it uses, but a POSITA would have been motivated to modify *Glorioso*'s display to include *Shah*'s LCD display. EX1002, ¶239. LCDs were well known and widely used in electronic devices at the time of the alleged invention, including in thermostats. EX1001, 1:54-55 (discussing LCD as part of "modern thermostats"); EX1029, 1-2, 4; EX1024, 1, 31-32, 41-42, 46; EX1018, 9:33-59, Fig. 3; EX1004, ¶¶[0070]-[0071]; EX1038, 4:56-5:7; EX1039, 1:40-48, 2:24-28; EX1002, ¶239. LCDs were known to be desirable due to their low cost, low power consumption, and compact design. *Id*. Thus, the desirability of using an LCD was known to persons of ordinary skill in the art, and a POSITA would have been motivated to incorporate *Shah*'s LCD display to obtain these benefits. *Id*. Because LCD's were known for thermostats, using one was a matter of design choice. *Id*. Because of their widespread use in thermostats as a conventional choice for a display, it would have been obvious for a POSITA to use an LCD in any thermostat. *Id*. Moreover, a POSITA would have understood the prevalence of LCDs in prior art systems, and would have been motivated to include an LCD in a thermostat due to the benefits offered and ordinary market pressures of low price due to wide availability. EX1002, ¶241.

A POSITA would have had a reasonable expectation of success. EX1002, ¶242. Using an LCD as a display in a thermostat would have involved combining

well known prior art elements (LCDs) according to known methods to yield predictable results (displaying information on an LCD). *Id*. Doing so would have involved minimal, if any, modification to *Glorioso*'s thermostat which has a display (and might even be an LCD). *Id*.

Glorioso is silent on whether it includes a real time clock (perhaps because it is so obvious) but a POSITA would have been motivated to include *Shah's* real time clock. Inclusion of a real time clock in a thermostat was common knowledge as admitted by the '555 Patent. EX1002, ¶¶69, 243, 258; EX1001 1:34-41; EX1018, Fig. 5; EX1021, 3:13-22. A real time clock was often implemented with an off the shelf component. EX1021, 3:13-22. The '555 Patent teaches that the components of the processor were available off the shelf. EX1001, 3:54-60.

Shah's processor includes a real time clock. For example, *Shah* discloses control algorithms 500 that include "a set-point schedule containing a list of times associated to a list of temperatures," in which the "thermal controller sets-up or sets-back the temperature according to such a set-point schedule." EX1010, 3:1-8. *Shah* discloses displaying the time on the display. *Id*., 3:9-20, Fig. 2. A POSITA would have understood that in order for the thermostat to display the time and to implement algorithms adjusting the temperature based on the time as *Shah* discloses, *Shah*'s processor includes a real-time clock. EX1002, ¶243.

A POSITA desiring to design a thermostat system would have recognized that a real time clock would offer a variety of well-known benefits. For example, a

POSITA would have recognized that including a real time clock would allow a user to be automate adjustment of the thermostat like is taught by *Shah*. EX1002, ¶244. This feature is common knowledge. EX1001 1:43-47. Also, displaying the time allows someone looking at the thermostat to see what time it is—another convenience for a user. EX1002, ¶244. A POSITA therefore would have been motivated by these benefits and the fact that many thermostats have clocks to include one in any thermostat. *Id*.

A POSITA would have had a reasonable expectation of success in modifying *Glorioso*'s thermostat to include a real time clock. EX1002, ¶245. Doing so would have involved combining well known prior art elements (thermostats and real time clocks) according to known methods (coupling) to yield predictable results (a thermostat with a real time clock). *Id*. As discussed, above, this modification could be made using off the shelf components. Doing so would have been well within the skill set of a POSITA and would not have involved substantial modification or undue experimentation. *Id*.

A POSITA would have been motivated to modify *Glorioso* to connect to the Internet, as disclosed in *Shah*. EX1002, ¶246. The ability for a thermostat to connect to the Internet, for example, to interface with external sources of information, was well-known and prevalent in prior art thermostat systems and disclosures. EX1002, ¶¶61-64, 246; *supra*, §VIII.A. Adding internet connectivity to thermostats was an obvious improvement to provide more information to users and

control to homeowners. EX1002, ¶246; EX1023, 9 n.10

It was within the general knowledge of those of ordinary that thermostats could utilize information available via the Internet. EX1002, ¶247. EX1026, 4:46-52. (thermostats are web appliances which may "utilize information from the Internet."). General knowledge thus provides a motivation to connect to the Internet.

The Federal Circuit has recognized that "adapting existing electronic processes to incorporate modern internet and web browser technology was [] ***commonplace" as early as 1998,*** well before the earliest alleged priority date of the asserted patents. *Muniauction, Inc. v. Thomson Corp.*, 532 F.3d 1318, 1325-27 (Fed. Cir. 2008). The claimed Internet communications interface (as well as the claimed functions it performs) is therefore, at best, nothing more than a "routine incorporation of Internet technology into existing processes." *Soverain Software LLC v. Newegg Inc.*, 705 F.3d 1333, 1343-44 (Fed. Cir. 2013).

A POSITA would have had a reasonable expectation of success in modifying *Glorioso's* thermostat, as various thermostats had been connected to the Internet before, as detailed in Section VIII. *Supra*, §VIII; EX1002, ¶¶61-62, 253. This would have involved combining well known prior art elements (thermostats and communications interfaces to the Internet) according to known methods (Internet connection) to yield predictable results (thermostat connected to the Internet). EX1002, ¶253. As acknowledged by the '555 Patent, implementing a

communications interface with means coupling the interface to a remote correspondent required nothing more than "typical coupling" and "conventional[] interfaces with an Internet Service Provider [] which completes the communications link to the remote correspondent in the well-known manner." EX1001, 5:65-6:10. A POSITA would have understood that *Glorioso* already includes the hardware, software, and/or circuitry to readily incorporate such a modification. EX1002, ¶253. Accordingly, connecting *Glorioso*'s thermostat to the Internet would have involved minimal, if any, modification to *Glorioso*'s thermostat.

2. Claim 18

Each of the eleven elements 18[pre]-18[d] are disclosed by *Glorioso-Shah*, as discussed below. EX1002, ¶¶254-262. To the extent Patent Owner disagrees, each of these elements is also common knowledge of a POSITA as admitted by the '555 Patent. EX1001, 1:18-64, 4:31-60; 4:13-15, 6:1-10; EX1002, ¶262. Petitioner may rely upon Patent Owner's admissions to "supply a missing claim element." *Qualcomm,* 24 F.4th at 1376. This paragraph provides an alternative basis for obviousness with respect to each of elements 18[pre]-18[d] below.

a. *18[Pre]*

If the preamble is limiting, the *Glorioso-Shah* combination discloses it. EX1002, ¶¶263-264. *Glorioso* discloses a thermostat system. *Glorioso* discloses a "smart thermostat," illustrated in Figure 1.

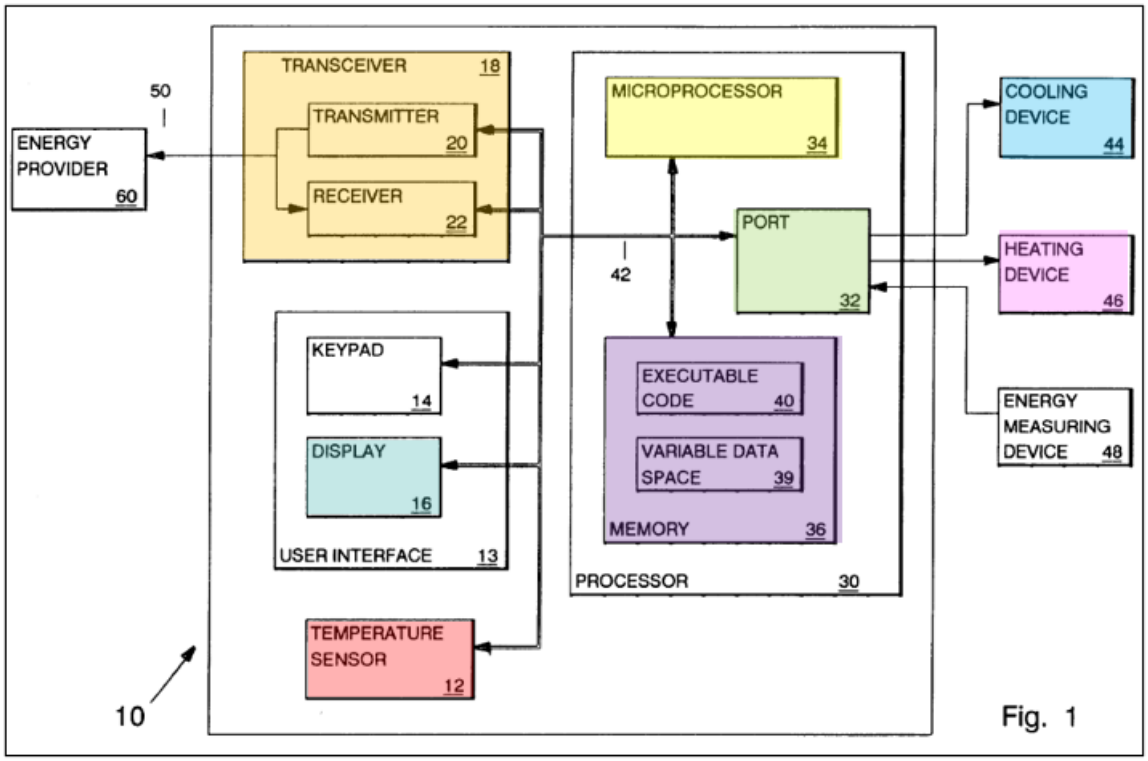

EX1009, Fig. 1, 2:54-3:8.

Glorioso's smart thermostat is for controlling space conditioning equipment. EX1002, ¶264. *Glorioso*'s smart thermostat controls a cooling device 44 (such as an air conditioner) and/or a heating device 46 (such as a furnace). EX1009, 2:54-3:8, 4:1-17.

b. *18[a]*

The *Glorioso-Shah* combination discloses 18[a]. EX1002, ¶¶265-268.

Glorioso discloses that "smart thermostat 10 includes a temperature sensor 12," as also illustrated in Figure 1. EX1009, Fig. 1, 2:54-3:8.

Glorioso's temperature sensor provides an electrical signal indicative of the temperature of a conditioned space in which the temperature sensor is situated. EX1002, ¶267. The temperature sensor is situated in the conditioned space and measures the temperature of that space. EX1009, 2:54-3:8; Abstract, 1:55-59; 2:24-25; EX1002, ¶267. A POSITA would have understood that *Glorioso*'s temperature sensor would provide that measured temperature in the form of an electrical signal, as was well known. EX1002, ¶267.

c. *18[b]*

The *Glorioso-Shah* combination discloses 18[b]. EX1002, ¶¶269-273.

Shah discloses an LCD. EX1010, 2:41-55; 2:63-67. *Shah*'s LCD display selectively displays an alphanumeric message. EX1002, ¶271. For example, the user can select a preferred language on the display, such as when the thermostat is first powered up after installation. EX1010, Abstract. Thus, the messages are "selectively" displayed because the software is programmed to display the message in the language the user requests. EX1002, ¶271.

Shah's Figure 2 illustrates that other messages are selectively displayed.

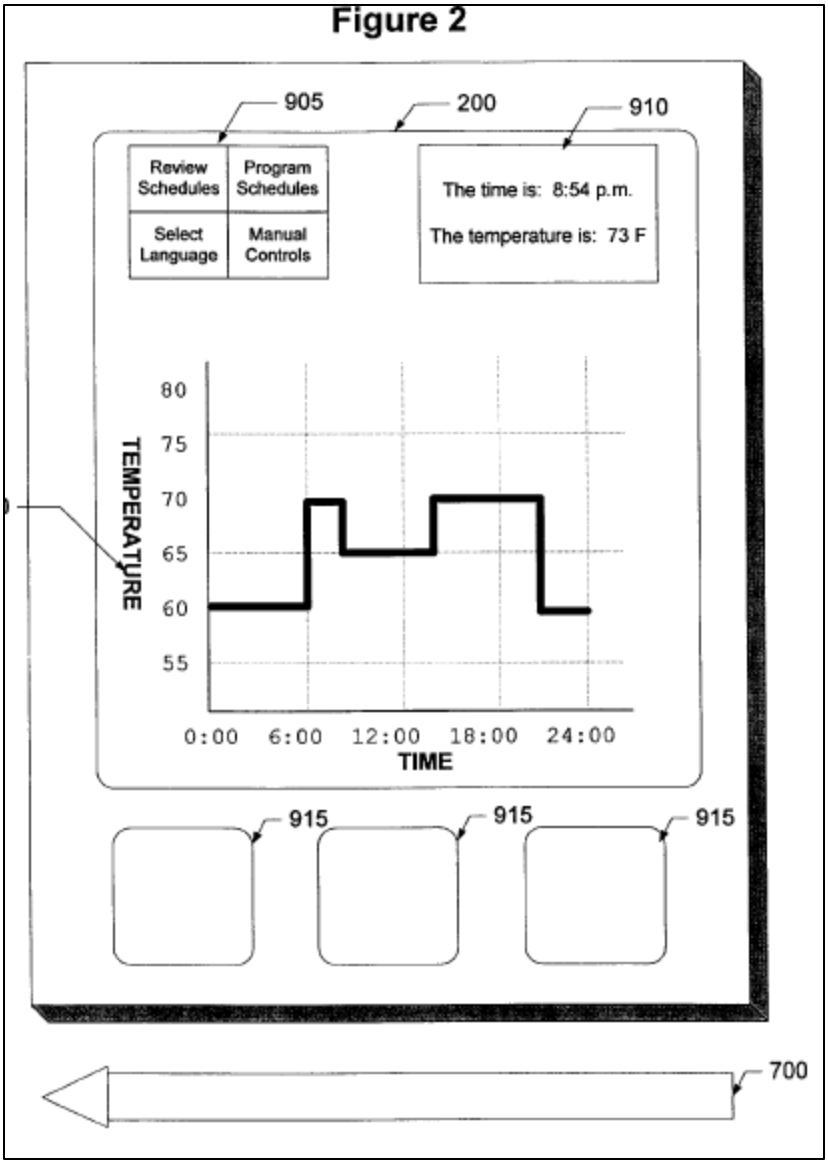

EX1010, Fig. 2. As *Shah* discloses, "[o]f course, other data could also be displayed, such as a current date, day of the week, indoor and/or outdoor relative humidity, etc." *Id*., 3:9-20. A POSITA accordingly would have understood that *Shah*'s LCD display selectively displays an alphanumeric message. EX1002, ¶271.

To the extent Patent Owner contends that the alphanumeric messages displayed must be received from the remote correspondent, the *Glorioso-Shah*

combination discloses this as addressed in 18[e]. *Infra*, §IX.C.2.i.

d. *18[c][1]*

The *Glorioso-Shah* combination discloses 18[c][1]. EX1002, ¶¶274-275.

Glorioso discloses a processor including a central processing unit. EX1002, ¶275. *Glorioso* discloses that its smart thermostat includes processor 30 (a processor) which includes microprocessor 34 (a CPU) (yellow):

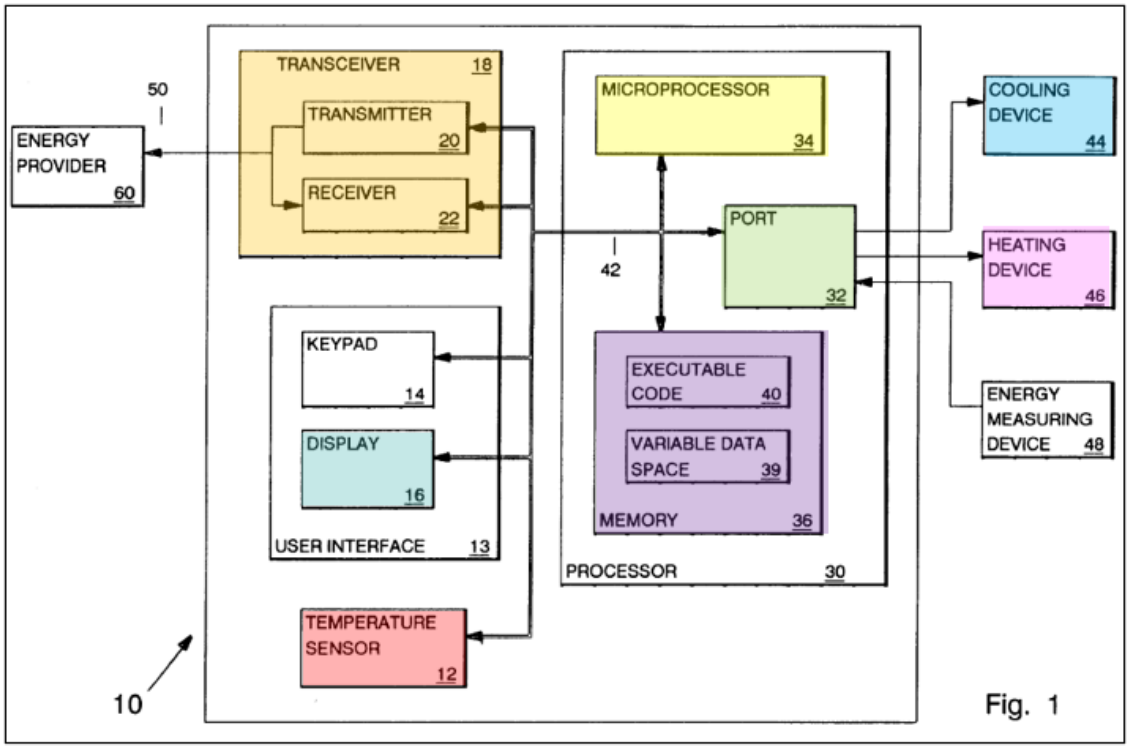

EX1009, Fig. 1, 2:54-3:8. Inventor Rosen agrees that the processor may be a microprocessor. EX1012, 92:24-93:5, 288:16-23.

e. *18[c][2]*

The *Glorioso-Shah* combination discloses 18[c][2]. EX1002, ¶¶276-278.

Glorioso is silent on the presence of a real time clock but it would be obvious

to include *Shah's* real time clock or a real time clock based upon common knowledge of a POSITA as set forth in Section VIII.A, which is incorporated by reference here. EX1010, 3:1-8, 5:44-50, 3:9-20, Fig. 2; EX1002, ¶¶69, 277-278; *supra*, VIII.

f. *18[c][3]*

The *Glorioso-Shah* combination discloses 18[c][3]. EX1002, ¶¶279-283.

Glorioso's processor (processor 30) includes a memory (memory 36) (purple):

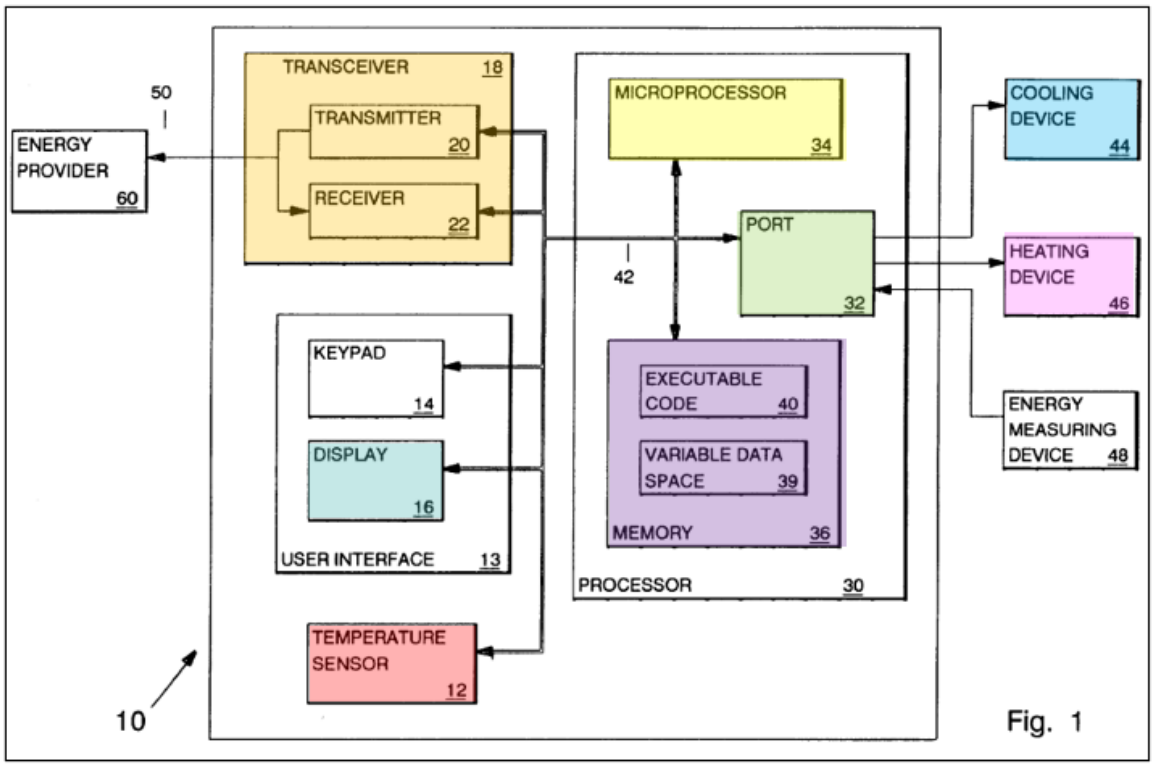

EX1009, Fig. 1, 2:54-3:8. As illustrated in Figure 1, the memory of *Glorioso*'s processor (memory 36) is coupled to the central processing unit (microprocessor 34). EX1002, ¶280. *Glorioso* discloses the memory 36 having instructions for microprocessor 34, which a POSITA would have understood involved coupling

Glorioso's memory 36 to microprocessor 34. EX1009, 2:59-63; EX1002, ¶280.

The memory of *Glorioso*'s processor is for storing program and data information. Memory 36 includes "variable data space 39 and an executable code 40 having instructions for the microprocessor 34 for directing the actions of the processor 30." EX1009, 2:54-3:8. A POSITA would have understood that such executable code is program information, and data space 39 contains data information. EX1002, ¶281. *Glorioso* also discloses the thermostat maintaining various temperature setpoints (data), which a POSITA would have understood would have been stored in memory. EX1009, 4:4-18; EX1002, ¶281.

g. *18[c][4]*

(a) 18[c][4][a]

The *Glorioso-Shah* combination discloses 18[c][4][a]. EX1002, ¶¶283-287.

Glorioso's processor includes an input/output unit. *Glorioso*'s input/output unit is a combination of transceiver 18 (including transmitter 20 and receiver 22), and port 32. EX1002, ¶285; EX1009, 2:54-3:8, Fig. 1. It is not clear if Claim 18 requires the components of the input/output unit to be in a single chip. Whether *Glorioso's* unit is one chip or multiple chips is irrelevant for the same reasons discussed in connection with Ground 1. *Supra*, §IX.A.2.g. This element is obvious for the same reason. The three components of the input/output unit recited by Claim 18 are discussed in this section and the following two sections incorporated by reference.

Glorioso's input/output unit includes a sensor input coupled to the temperature sensor for receiving said electrical signal therefrom. As detailed in 18[a], *Glorioso* discloses a temperature sensor providing an electrical signal as temperature sensor 12. *Supra*, §IX.C.2.b. As illustrated in Figure 1, the temperature sensor is coupled to port 32. EX1009, Fig. 1. While *Glorioso* is not clear as to where electrical signals from the temperature sensor are received, a POSITA would understand that it is obvious that the port 32 could receive such signals. EX1002, ¶286. The schematic indicates that Port 32 can provide output and receive input based upon the arrows going in and out of the port. *Id*. Thus, it would be obvious for the port 32, which is shown as connected to the temperature sensor, to receive an electrical signal therefrom. In order for the thermostat to function properly, the temperature sensor would need to be connected to some sensor input so that the processor receives the proper temperature to control the system. *Id*. To the extent that sensor input is not in the Port 32, any alternate circuitry receiving the signal would be part of the input/output unit. *Id*.

(b) <u>18[c][4][b]</u>

The *Glorioso-Shah* combination discloses 18[c][4][b]. EX1002, ¶¶288-291.

Glorioso's input/output unit includes a control output (port 32) coupled to space conditioning equipment (cooling device 44 and/or heating device 46). EX1002, ¶289. *Glorioso* discloses "port 32 is connected to a cooling device 44 such as an air conditioner, a refrigerator, or a freezer and/or a heating device 46 such

as a furnace, boiler, or an oven." EX1009, 2:54-3:8.

Glorioso's port 32 issues control signals to the space conditioning equipment. EX1002, ¶290. *Glorioso* discloses "[t]he processor 30 *issues a control signal through the port 32 for operating the cooling device 44 and/or heating device 46* when the temperature is different than the temperature setpoint associated with the acceptable energy cost level." EX1009, 4:4-18. This control signal includes control information to the space conditioning equipment. *Id*., 6:19-27, 4:1-36.

(c) <u>18[c][4][c]</u>

The *Glorioso-Shah* combination discloses 18[c][4][c]. EX1002, ¶¶292-295.

Glorioso's input/output unit includes a communications interface. *Glorioso* discloses transmitter 20/receiver 22 of transceiver 18 communicating through communication network 50. EX1009, 3:8-12, 3:40-67, 4:1-4, 6:4-6, 6:48-51, 6:63-65. A POSITA accordingly would have understood that the transceiver comprising transmitter 20/receiver 22 is a communications interface. EX1002, ¶293.

Glorioso's communications interface is adapted to establish bi-directional communications between said processor and a first remote correspondent. *Glorioso* discloses a remote correspondent as energy provider 60 including computer system 62 and receiver 64 and transmitter 66 in bi-directional communication with the processor of the thermostat. EX1009, 4:37-51; Fig. 2; EX1002, ¶294. *Glorioso* discloses that transceiver (comprising transmitter 18/receiver 22) of *Glorioso*'s input/output unit is in communication with energy provider 60 (and

accordingly, a POSITA would have understood, computer system 62 and transmitter 66). EX1009, 3:8-10, 4:1-4; EX1002, ¶294.

Glorioso's remote correspondent is a source of current information. EX1002, ¶295. Computer system 62 is a source of information regarding "outages, announcements, promotions, or the like." EX1009, 5:16-22; EX1002, ¶295. *Glorioso* also discloses that computer system 62 is a source of information for "the current price level for energy" and billing. EX1009, 4:2-3, 4:52-5:15, 6:4-30.

h. *18[d]*

The *Glorioso-Shah* combination discloses 18[d]. EX1002, ¶¶297-302.

Glorioso discloses a means coupling said communications interface and said first remote correspondent. EX1002, ¶298.

(a) Function

Glorioso discloses the claimed function of "coupling the communications interface with the remote correspondent." EX1002, ¶299. As described in 18[e], *Glorioso* discloses that the transceiver of its smart thermostat is coupled to computer system 62 (remote correspondent) of energy provider 60, for example, to communicate information. *Supra*, §IX.C.2.i; EX1009, 3:8-10, 4:1-4; EX1002, ¶299.

(b) Structure

Glorioso discloses the structure of "a serial link and/or data link and any equivalents." EX1002, ¶300-302. *Glorioso* discloses communications network

50 includes a wired or wireless wide area network. EX1009, 3:17-39; 3:40-44. A POSITA would have understood that a wired or wireless connection to a WAN to transmit bits to communicate with a remote device (energy company computer) over the WAN comprises a data link. EX1002, ¶300; EX1030, ¶¶[0012], [0017], [0023], [0041], [0044]-[0048], Fig. 4; EX1001, 6:1-11.

i. *18[e]*

The *Glorioso-Shah* combination discloses 18[e]. EX1002, ¶¶303-306.

Glorioso's messages received from the first remote correspondent do not pertain to the operation of said thermostat system. As detailed in 18[c], the messages are on "outages, announcements, promotions, or the like" or "the current price level for energy" and billing information. *Supra*, §IX.C.2.d-g. EX1009, 2:7-11, 4:1-4, 4:28-29, 4:52-5:3, 5:9-12, 6:4-6, 6:51-53. A POSITA would have understood that each of these types of information do not pertain to the operation of the thermostat. EX1002, ¶304. None of them concerns the operational status of the thermostat—the genesis for inclusion of "pertain to" limitation. *Supra*, §V.A.

Glorioso discloses a program stored in said memory for the displaying messages received from said first remote correspondent. EX1002, ¶305. Those messages would be displayed on the *Shah*'s LCD, as would be obvious to use for the display. *Supra*, §IX.C.1. *Glorioso* discloses a user interface that "displays the request information, announcements, and/or promotions to the user." EX1009, 2:7-9, 5:54-6:3. And as detailed in 18[c][3], *Glorioso*'s thermostat includes "a

memory 36 including variable data space 39 and an executable code 50 having instructions for the microprocessor 34 for directing actions of processor 30." *Id*., 2:59-63. A POSITA would have understood based on *Glorioso*'s disclosure that displaying such messages on a user interface would have involved a program stored in *Glorioso*'s memory for displaying the messages or information. EX1002, ¶305; EX1035, Abstract, 3:8-49, Figs. 1-2; EX1036, 4:4-5:5. At the very least, it would have been obvious for software to cause display of the messages because the most common way to control information content on a display is by the use of software. *Id.*

3. Claim 20

The *Glorioso-Shah* combination discloses Claim 20. EX1002, ¶¶307-309; *supra*, §IX.C.2. As detailed in 18[c][4][c] and [d], *Glorioso* discloses its smart thermostat communicating over a communication network such as a WAN using commercially available phone line or fiber optic components to communicate with and couple to the first remote correspondent. *Supra*, §IX.C.2.g-h. *Glorioso* discloses that such a WAN "may be wired or wireless" and may include "CDPD protocol for piggy backing digital data on an analog cellular telephone." EX1009, 3:31-39. A POSITA would have understood that such a CDPD protocol would have supported TCP/IP transmission and thus included communicating over the Internet. EX1002, ¶307; EX1019, 4:35-40, 5:26-30.

Additionally, it would be obvious to carry out the claimed communications

over the Internet. First, the Internet is a type of WAN. EX1002, ¶308. Second, *Shah* discloses a thermostat with a "network interface for connecting to the Internet or other network," such as "network interface 950." EX1010, 3:44-65, Abstract. It would have been obvious to connect *Glorioso*'s transmitter 20/receiver 22 to incorporate *Shah*'s network interface 950 connected to the Internet (including with a modem connected to a phone line) to communicate over the Internet. *Supra*, §IX.C.1; EX1002, ¶308; EX1010, 3:44-65.

Communications being carried out over the Internet between a remote correspondent and a thermostat is a matter of common knowledge of a POSITA. As explained above, connecting a thermostat to the Internet was a matter of common knowledge. *Supra*, §VIII.A.

X. SECONDARY CONSIDERATIONS

Petitioner is aware of no evidence of secondary considerations that would meaningfully rebut a finding of obviousness. EX1002, ¶¶310-311. Petitioner reserves the right to rebut any purported objective evidence of non-obviousness raised by PO.

XI. INSTITUTION SHOULD BE GRANTED

A. Discretion Under 35 U.S.C. § 314(a)

The Board should not exercise its discretion under §314(a) to deny this Petition. First, no other petitions have been filed against the '555 Patent. *Gen. Plastic Indus. Co. v. Canon Kabushiki Kaisha*, IPR2016-01357, Paper 19, 15-16

(P.T.A.B. Sept. 6, 2017) (precedential).

Second, if the Board applies the analysis in *NHK Spring Co. v. Intri-Plex Techs., Inc.*, IPR2018-00752, Paper 8, 19-20 (P.T.A.B., Sept. 12, 2018) (precedential)[2] or *Apple Inc. v. Fintiv, Inc.*, IPR2020-00019, Paper 11, 5-6 (P.T.A.B. Mar. 20, 2020) (precedential), those factors taken together support institution.

Factor 1: Potential Stay

While Petitioner intends to move for a stay, the Board should "not attempt to predict how the district court in the related district court litigation will proceed[.]" *Sand Revolution II LLC v. Cont'l Intermodal Grp.-Trucking LLC*, IPR2019-01393, Paper 24, 7 (P.T.A.B. Jun. 16, 2020) (informative).

Factor 2: Trial Date

The related litigation is set for jury trial beginning June 3, 2024. EX1010, 2. That is approximately three months before the projected September 2024 statutory deadline for the Board to enter a final written decision (if instituted). "[T]he decision whether to institute will likely implicate other factors . . . such as the resources that have been invested in the parallel proceeding." *Apple*, IPR2020-00019, Paper 11, 9. As discussed below, the litigation is in its early stages.

---

[2] Petitioner recognizes the Board must apply its precedential caselaw, but specifically reserves its objection to the Board's application of the *NHK-Fintiv* caselaw as non-justiciable under the APA.

Also, trial dates are uncertain. *Halliburton Energy Servs., Inc. v. U.S. Well Servs., LLC*, IPR2021-01037, Paper 12 (P.T.A.B. Jan. 19, 2022); EX1044, 2 (finding the PTAB had accurately "evaluat[ed] future trial dates" only six percent of the time); EX1046 (similar). Even if the trial is scheduled several months before the Board's final written decision, this factor would be "at most, neutral." *Micron Tech., Inc. v. Godo Kaisha IP Bridge 1*, IPR2020-01008, Paper 10, 14 (P.T.A.B. Dec. 7, 2020) *Google LLC v. Parus Holdings, Inc.*, IPR2020-00846, Paper 9, 12-14 (P.T.A.B. Oct. 21, 2020).

If trial were to proceed as scheduled, this factor at most "only slightly favors" denying institution. *Micron Tech., Inc. v. Vervain, LLC*, IPR2021-01550, Paper 11, 10 (P.T.A.B. Apr. 11, 2022) In that case, however, it is outweighed by other factors here, including the relatively early stage of the case as discussed below. *Microsoft Corp. v. WSOU Inv., LLC, IPR2021-00930*, Paper 8, 6-13 (P.T.A.B. Dec. 2, 2021); *Facebook, Inc. v. USC IP P'ship, L.P.*, IPR2021-00033, Paper 13 (P.T.A.B. Apr. 30, 2021)

Factor 3: Investment in the parallel proceeding

Neither the parties nor the court have expended substantial effort in the parallel proceeding. Petitioner filed a motion to dismiss on June 21, 2022. The motion was granted in part and denied in part on January 4, 2023. Patent Owner served its preliminary infringement contentions on October 20, 2022 and its amended infringement contentions on November 21, 2022. Petitioner served its

invalidity contentions on December 15, 2022. The claim construction process has only just begun. Claim construction briefing will be completed by May 11, 2023, followed by a potential hearing. EX1047, 8. The effort and resources expended to date are "typical of the early stages of litigation" and thus this factor "does not favor exercising discretion to deny institution." *Apple Inc. v. Smart Mobile Techs. LLC*, IPR2022-00808, Paper 24, 52 (P.T.A.B. Sept. 29, 2022).

Petitioner worked diligently to file this Petition. As noted above, Petitioner moved to dismiss on June 21, 2022. That motion was potentially case dispositive as to the '555 Patent. To conserve resources of the Board and the parties, it would have made no sense to file petitions for IPR prior to resolving the motion to dismiss. This Petition was filed just over two months after the district court denied the motion. Additionally, the Petition was filed within five months of receiving Patent Owner's original infringement contentions and less than two months after receiving Patent Owner's proposed claim constructions.

It would be premature to speculate as to "the amount and type of work" that will have been completed when the institution decision is made. *Google*, IPR2020-00846, Paper 9, 17-18. For example, the discovery deadline is November 20, 2023. EX1010, 6. Dispositive motions are due on December 21, 2023. *Id.*, 2. Thus, there will certainly be "much work remain[ing] in the district court case as it relates to invalidity" when this proceeding is ready for institution. *Sand Revolution*, IPR2019-01393, Paper 24 at 10. Coupled with Petitioner's diligence in filing this

Petition, this factor weighs against discretionary denial. *Cf. id.* at 10-11; *Google*, IPR2020-00846, Paper 9 at 18.

Factor 4: Issue Overlap

This Petition challenges each district court asserted claim. EX1017, 1. Petitioners served invalidity contentions in the parallel proceeding. Although *Shamoon*, *Inoue*, *Peters*, *Glorioso*, *Shah*, and weather.com are included, the parallel case is at an early stage. Neither party has served its claim construction brief. Any overlap between the two proceedings at this point would be completely speculative. As such, this factor fails to support discretionary denial.

Factor 5: Party Overlap

Petitioner and Patent Owner are parties in the related district court litigation.

Factor 6: Other Circumstances Favoring Institution

Additional circumstances favor institution. First, Petitioner acted diligently. Petitioner has gained no advantage from the parallel litigation, which favors institution. *Oticon Med. AB v. Cochlear Ltd.*, IPR2019-00975, Paper 15, 22-23 (P.T.A.B. Oct. 16, 2019) (precedential). The motion to dismiss had the potential to dispose of the case for the ’555 Patent. It was entirely reasonable for Petitioner to wait until the motion was decided before undertaking the effort and expense of preparing the instant Petition.

Moreover, the merits favor institution. “In such cases, the institution of a trial may serve the interest of overall system efficiency and integrity because it allows

the proceeding to continue in the event that the parallel proceeding settles or fails to resolve the patentability question presented in the P.T.A.B. proceeding." *Google*, IPR2020-00846, Paper 9 at 21 (quoting *Fintiv*, 14-15). The Petition's Grounds 1-4 render obvious every challenged claim. Multiple references disclose sending information over the Internet to a thermostat—the alleged point of novelty. Because the merits of Petitioner's patentability challenge is compelling, this factor weighs against denying institution. *Fintiv*, 14-15; EX1031, 4.

"Considering the *Fintiv* factors as part of a holistic analysis," it would undermine "the interests of the efficiency and integrity of the system" if the Board were "to deny institution of a potentially meritorious Petition." *Sand Revolution*, Paper 24, 14.

B. Discretion Under 35 U.S.C. §325(d)

The Board should not exercise its discretion under 35 U.S.C. §325(d). None of the art that is the basis of Petitioner's grounds were disclosed, cited, or considered during prosecution. This Petition does not present a situation in which "the same or substantially the same prior art or arguments previously were presented to the Office." 35 U.S.C. §325(d). Accordingly, the Board should decline to exercise its discretion under 35 U.S.C. §325(d).

XII. CONCLUSION

Petitioner respectfully requests institution of IPR and that the Challenged Claims be cancelled as unpatentable pursuant to 35 U.S.C. §318(b).

Respectfully Submitted,

March 29, 2023

/David G. Wille/
David G. Wille (Reg. No. 38,363)
BAKER BOTTS L.L.P.
2001 Ross Avenue, Suite 900
Dallas, TX 75201-2980
Tel: 214-953-6595
david.wille@bakerbotts.com

Attorneys for Petitioner, Lennox Industries Inc.

CERTIFICATE OF SERVICE

In accordance with 37 C.F.R. §§ 42.6(e) and 42.105, the undersigned certifies that on March 29, 2023, a complete and entire copy of the **PETITION FOR *INTER PARTES* REVIEW OF CLAIMS 18 and 20 OF U.S. PATENT NO. 6,619,555** including exhibits and testimony relied upon and a power of attorney were served on Patent Owner via FedEx overnight at the correspondence address of record for the subject patent, the attorney or agent of record for the subject patent listed in the assignment record for the subject patent who also is the attorney or agent of record for all of the other asserted patents in the NDTX litigation, and counsel for Patent Owner in the NDTX Litigation, as included below:

Howard B. Rosen
1 Lyncroft Road
Hampstead, QC H3X 3E3
Canada

Marc Hankin
Hankin Patent Law, APC
12400 Wilshire Boulevard, Suite 1265
Los Angeles, CA 90025

Hao Ni
NI, WANG & MASSAND, PLLC
8140 Walnut Hill Ln., Ste. 500
Dallas, TX 75231

Date: March 29, 2023

/David G. Wille/
David G. Wille (Reg. No. 38,363)
BAKER BOTTS L.L.P.
2001 Ross Avenue, Suite 900

Dallas, TX 75201-2980
Tel: 214-953-6595
david.wille@bakerbotts.com

Attorneys for Petitioner, Lennox Industries Inc.

CERTIFICATION UNDER 37 C.F.R. § 42.24(d)

Pursuant to 37 C.F.R. § 42.24(d), the undersigned hereby certifies that the word count under § 42.24(a)(1) for the foregoing Petition for *Inter Partes* Review totals 13,995 words, within the 14,000 word limit allowed under § 42.24(a)(1)(i).

Date: March 29, 2023

/David G. Wille/

David G. Wille (Reg. No. 38,363)
BAKER BOTTS L.L.P.
2001 Ross Avenue, Suite 900
Dallas, TX 75201-2980
Tel: 214-953-6595
david.wille@bakerbotts.com

Attorneys for Petitioner, Lennox Industries Inc.