US007156318B1

(12) **United States Patent**
Rosen

(10) **Patent No.: US 7,156,318 B1**
(45) **Date of Patent: Jan. 2, 2007**

(54) **PROGRAMMABLE THERMOSTAT INCORPORATING A LIQUID CRYSTAL DISPLAY SELECTIVELY PRESENTING ADAPTABLE SYSTEM MENUS INCLUDING CHANGEABLE INTERACTIVE VIRTUAL BUTTONS**

(76) Inventor: **Howard Rosen**, Lyncroft Road, Hampstead, Quebec (CA) H3X 3E3

(*) Notice: Subject to any disclaimer, the term of this patent is extended or adjusted under 35 U.S.C. 154(b) by 730 days.

(21) Appl. No.: **10/654,235**

(22) Filed: **Sep. 3, 2003**

(51) **Int. Cl.**
G05D 23/00 (2006.01)
G09G 5/00 (2006.01)

(52) **U.S. Cl.** **236/94**; 62/129; 165/11.1; 345/173; 700/276

(58) **Field of Classification Search** ..... 236/1 C, 236/94; 62/126, 129; 165/11.1; 345/173; 700/276

See application file for complete search history.

(56) **References Cited**

U.S. PATENT DOCUMENTS

4,224,615	A	9/1980	Penz
4,224,625	A	9/1980	Peretz
5,086,385	A	2/1992	Launey et al.
5,170,935	A	12/1992	Federspiel et al.
5,818,428	A	10/1998	Eisenbrandt et al.
6,059,195	A	5/2000	Adams et al.
6,192,282	B1	2/2001	Smith et al.
6,285,912	B1	9/2001	Ellison et al.
6,330,806	B1	12/2001	Beaverson et al.
6,344,861	B1	2/2002	Naughton et al.
6,478,233	B1	11/2002	Shah
6,595,430	B1	7/2003	Shah
6,621,507	B1	9/2003	Shah
7,114,554	B1 *	10/2006	Bergman et al. 165/238

FOREIGN PATENT DOCUMENTS

DE	3334117.6	4/1985
EP	0985994	3/2000
WO	WO 97/11448	3/1997
WO	WO 97/39392	10/1997

OTHER PUBLICATIONS

ADI, "Leopard User Manual," 93 pages, 2001.

Business Wire, "MicroTouch Specialty Products Group to Capitalize on Growing Market for Low-Cost Digital Matrix Touchscreens," p1174 (2 pages), Jan. 6, 1999.

DeKoven et al., "Designing Collaboration in Consumer Products," 2 pages, 2001. Freudenthal et al., "Communicating extensive smart home functionality to users of all ages: the design of a mixed-initiative multimodal thermostat-interface," pp. 34-39, Mar. 12-13, 2001.

Honeywell News Release, "Honeywell's New Sysnet Facilities Integration System For Boiler Plant and Combustion Safety Processes," 4 pages, Dec. 15, 1995.

Honeywell, "W7006A Home Controller Gateway User Guide," 31 pages, Jul. 2001.

"High-tech options take hold in new homes—200-08-28—Dallas Business Journal," http://biziournals.com!dallas/stories/2000/08/28/focus4, 3 pages, dated Aug. 28, 2000, printed Aug. 19, 2004.

(Continued)

Primary Examiner—Marc Norman
(74) *Attorney, Agent, or Firm*—Marc E. Hankin; Hankin Patent Law

(57) **ABSTRACT**

A programmable thermostat, with a touch screen liquid crystal display having the capability to add to or remove virtual buttons to the display depending on the items of space conditioning equipment connected with and controlled by the thermostat.

20 Claims, 8 Drawing Sheets

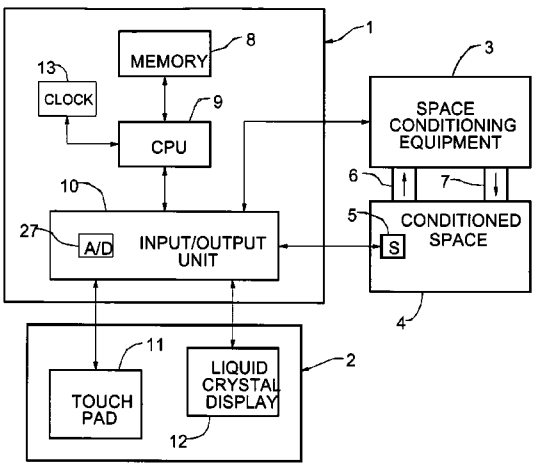

OTHER PUBLICATIONS

"Product Review—Philips Pronto Remote Control," http://hometheaterhifi.com/volume 62/philipsprontoremotecontrol.html, 5 pages, dated May 1999, printed Aug. 20, 2004.
http://www.cc.gatech.edu/computing/classes/cs6751 94 fall/2roupc/climate-2/node 1 .html, "Contents," 53 pages, printed Sep. 20, 2004.
"HAI Company Background," http://www.homeauto.com/AboutHAI/abouthai main.htm, 2 pages, printed Aug. 19, 2004.
Cardio Manual, available at http://www.secant.ca/En/Documentation/Cardio2é-Manual.pdf, Cardio Home Automation Inc., 55 pages, printed Sep. 28, 2004.
"RC X10 Automation Forum: Control your Heating and Cooling System with Pronto(1/1)," http://www.remotecentral.comicgi-binimboardlrc-x 1 0/thread.c~i? 12, 2 pages, dated Apr. 23, 1999, printed Aug. 20, 2004.

* cited by examiner

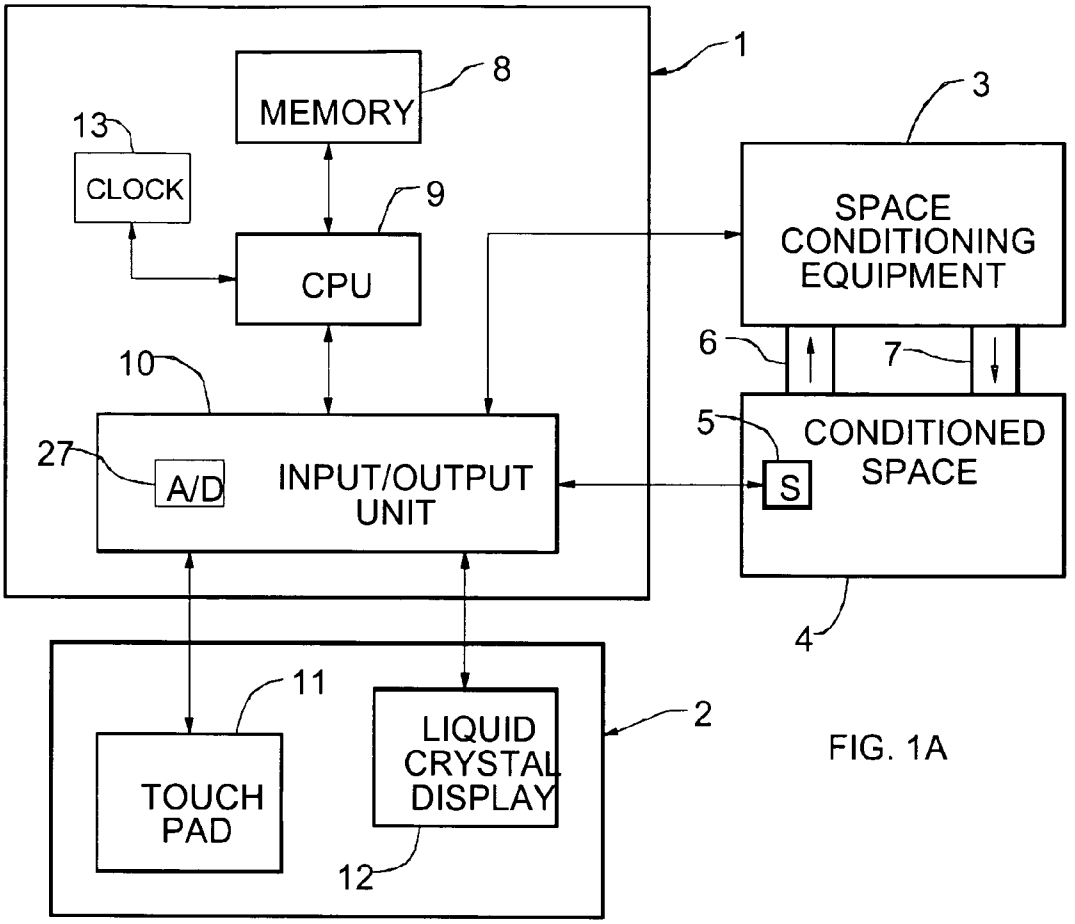
1
MEMORY
8
13
CLOCK
9
CPU
3
SPACE CONDITIONING EQUIPMENT
6
7
10
5
CONDITIONED SPACE
27
A/D
INPUT/OUTPUT UNIT
S
4
11
2
LIQUID CRYSTAL DISPLAY
TOUCH PAD
12

FIG. 1A

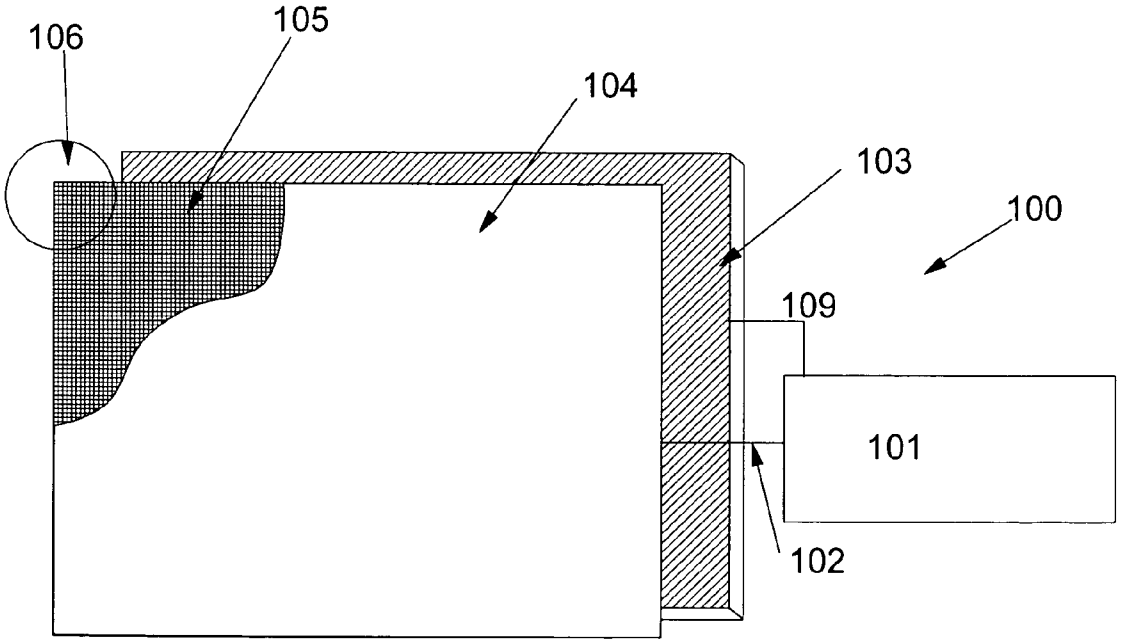
106
105
104
103
100
109
101
102

FIG. 1

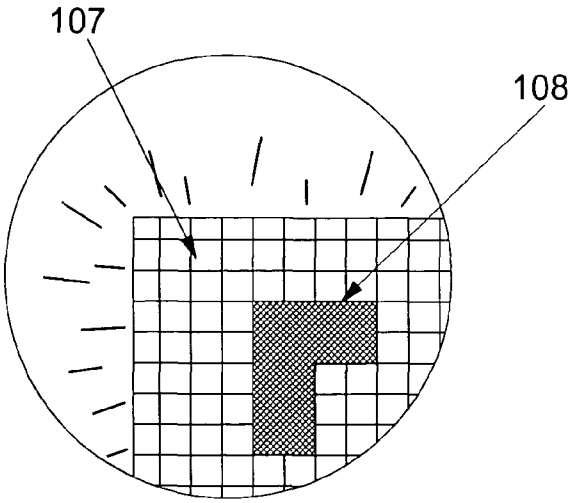

FIG. 2

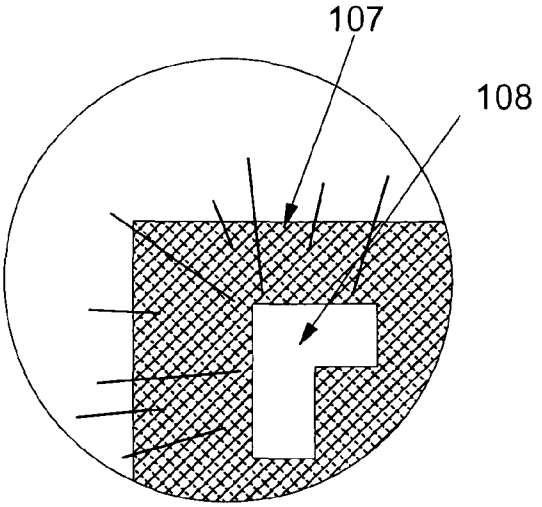

FIG. 3

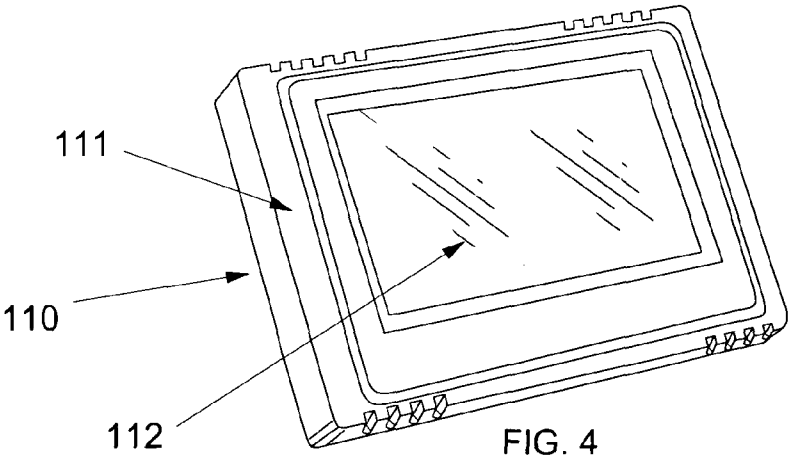

FIG. 4

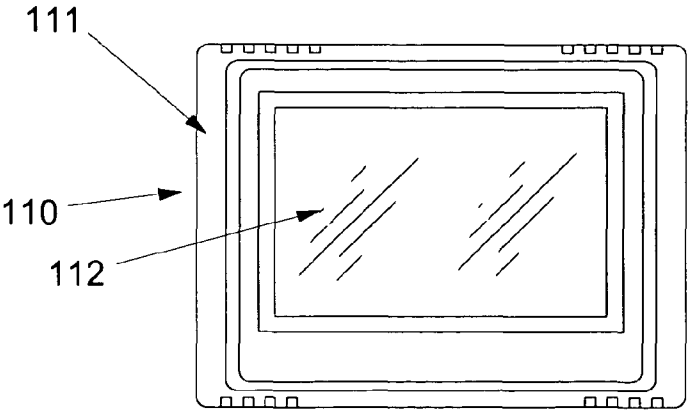

FIG. 5

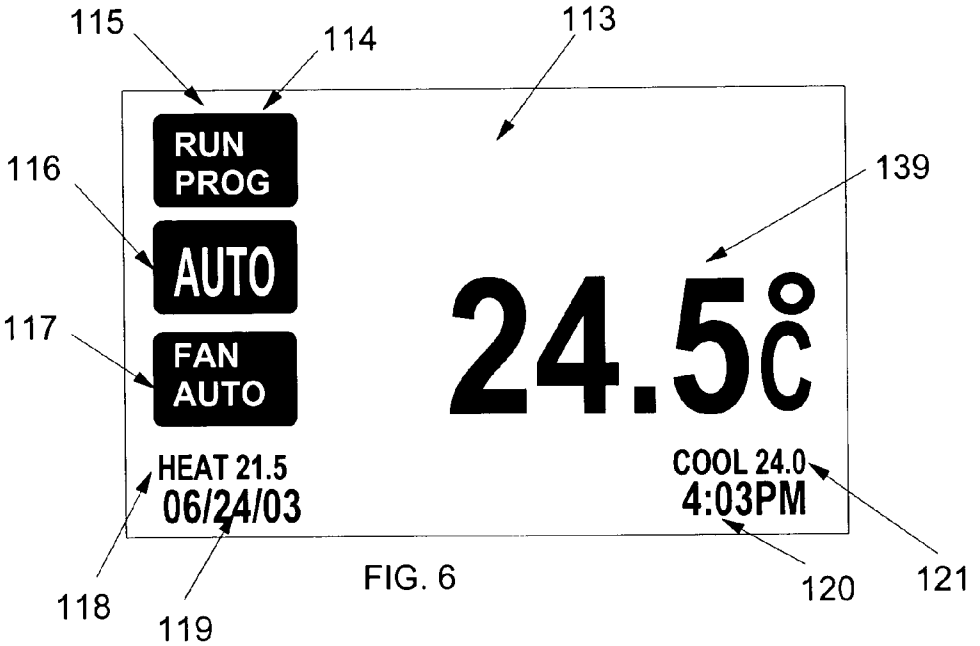
115
114
113
RUN
PROG
116
139
AUTO
24.5°C
117
FAN
AUTO
HEAT 21.5
06/24/03
COOL 24.0
4:03PM
118
119
120
121

FIG. 6

FIG. 7

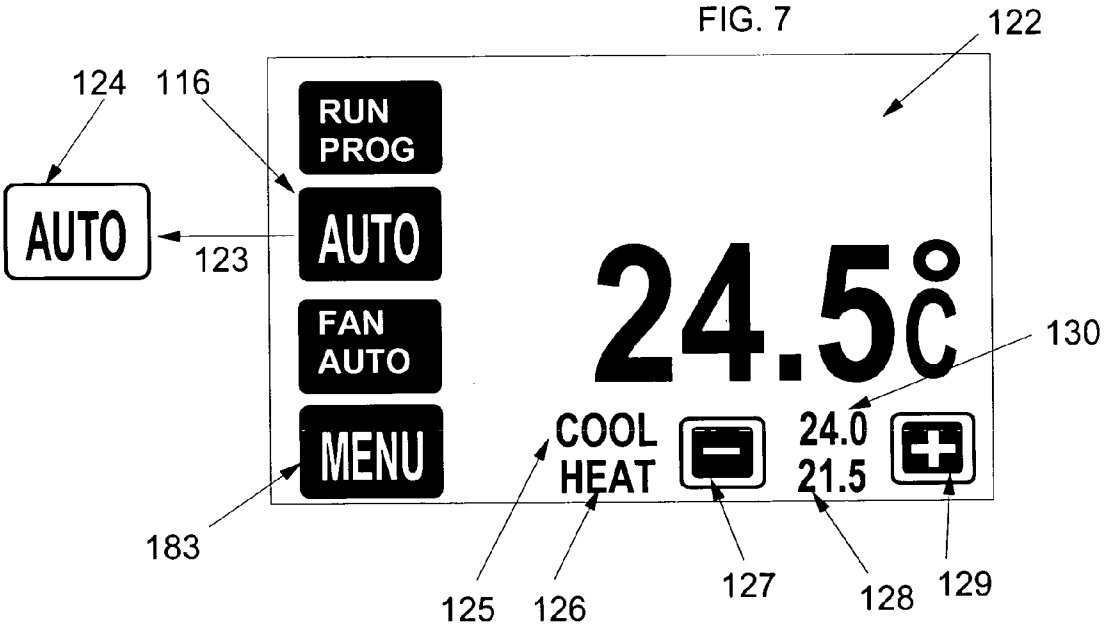
122
124
116
RUN
PROG
AUTO
AUTO
123
FAN
AUTO
24.5°C
130
MENU
COOL
HEAT
24.0
21.5
183
125
126
127
128
129

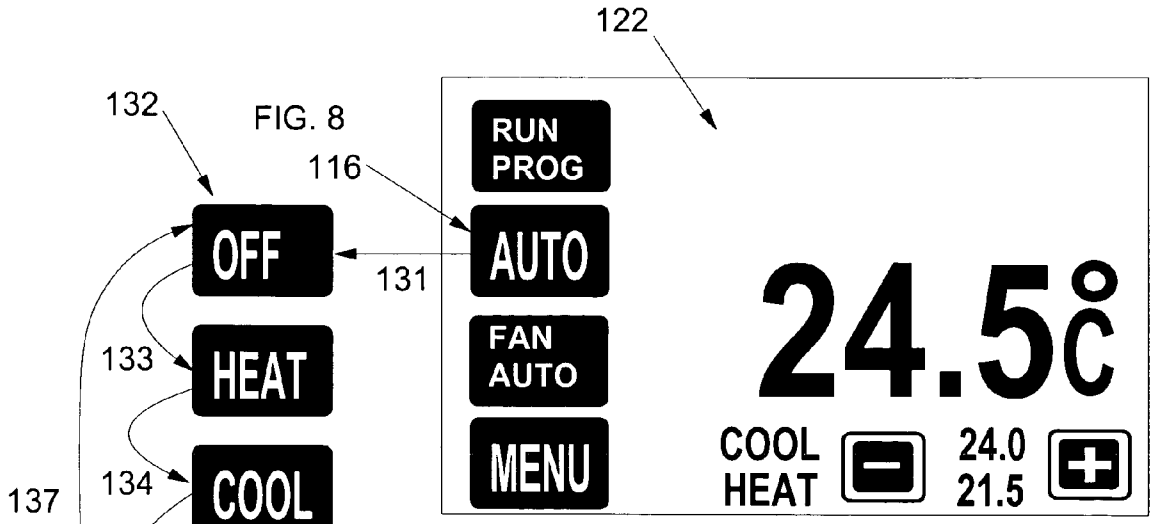

FIG. 8

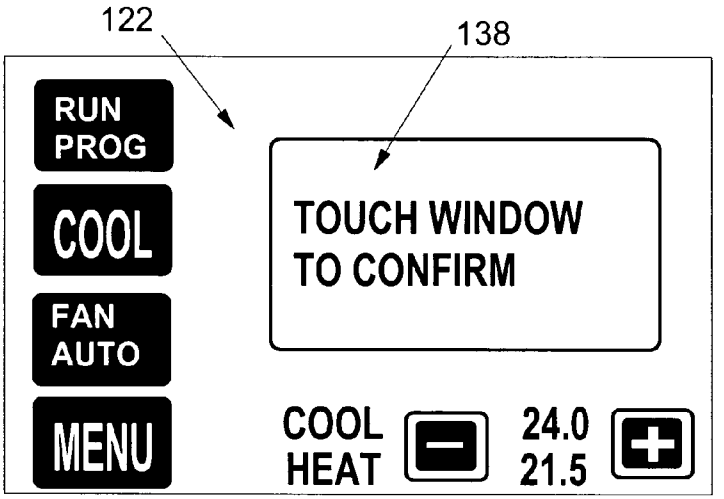

FIG. 9

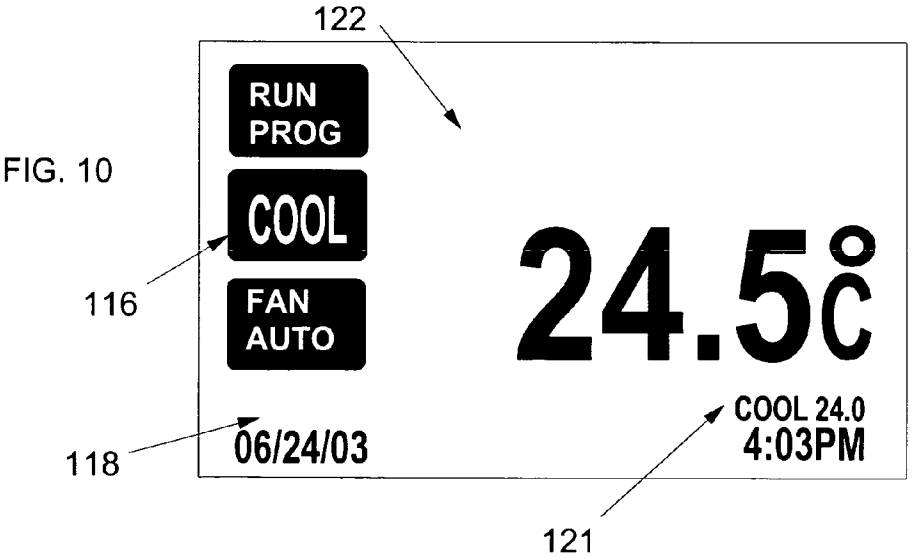

FIG. 10

FIG. 11

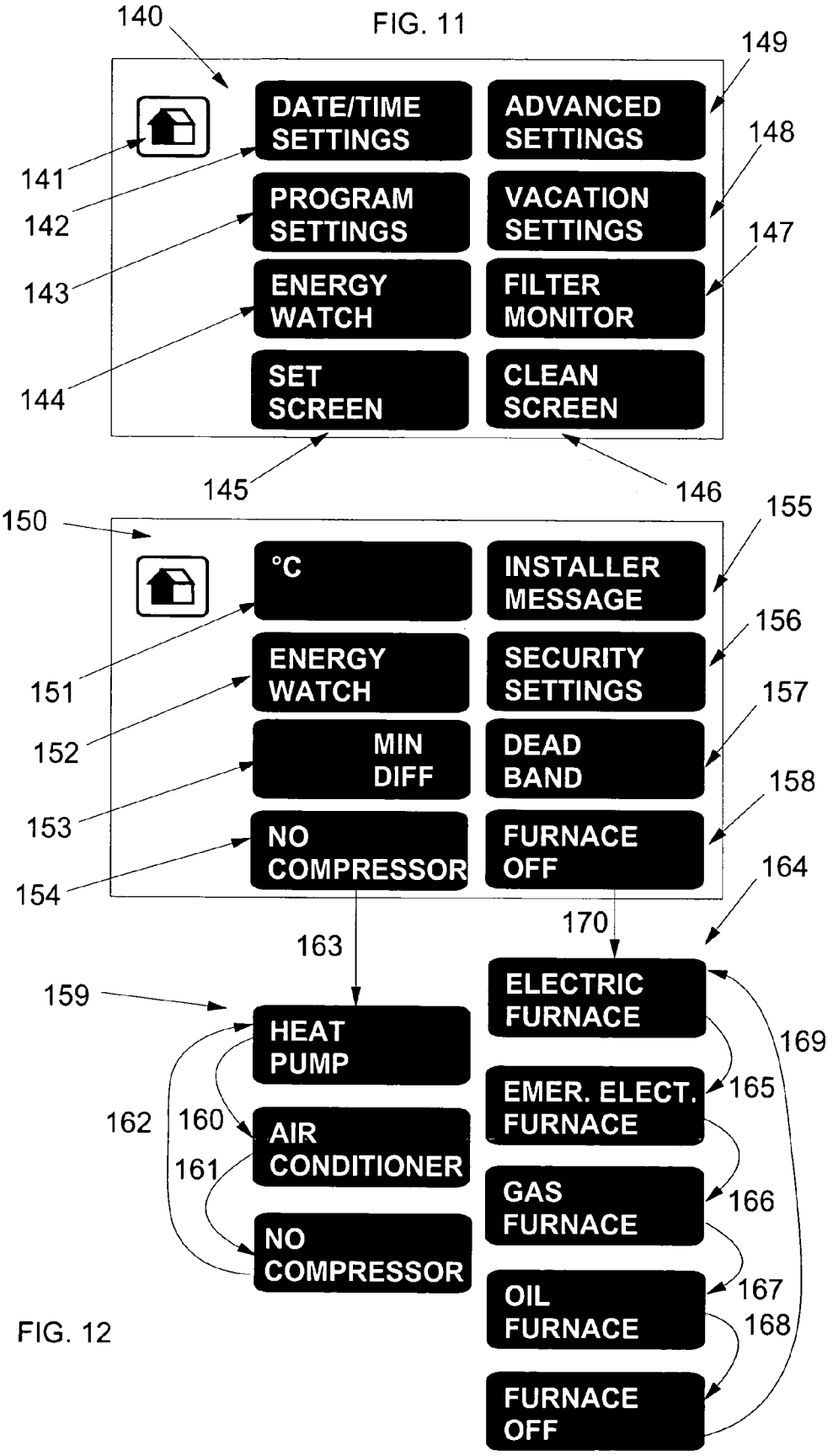
140
149
DATE/TIME SETTINGS
ADVANCED SETTINGS
148
141
142
PROGRAM SETTINGS
VACATION SETTINGS
147
143
ENERGY WATCH
FILTER MONITOR
144
SET SCREEN
CLEAN SCREEN
145
146
150
155
°C
INSTALLER MESSAGE
156
151
ENERGY WATCH
SECURITY SETTINGS
157
152
MIN DIFF
DEAD BAND
158
153
NO COMPRESSOR
FURNACE OFF
154
164
163
170
159
ELECTRIC FURNACE
HEAT PUMP
169
EMER. ELECT. FURNACE
165
162
160
AIR CONDITIONER
161
GAS FURNACE
166
NO COMPRESSOR
OIL FURNACE
167
168
FURNACE OFF

FIG. 12

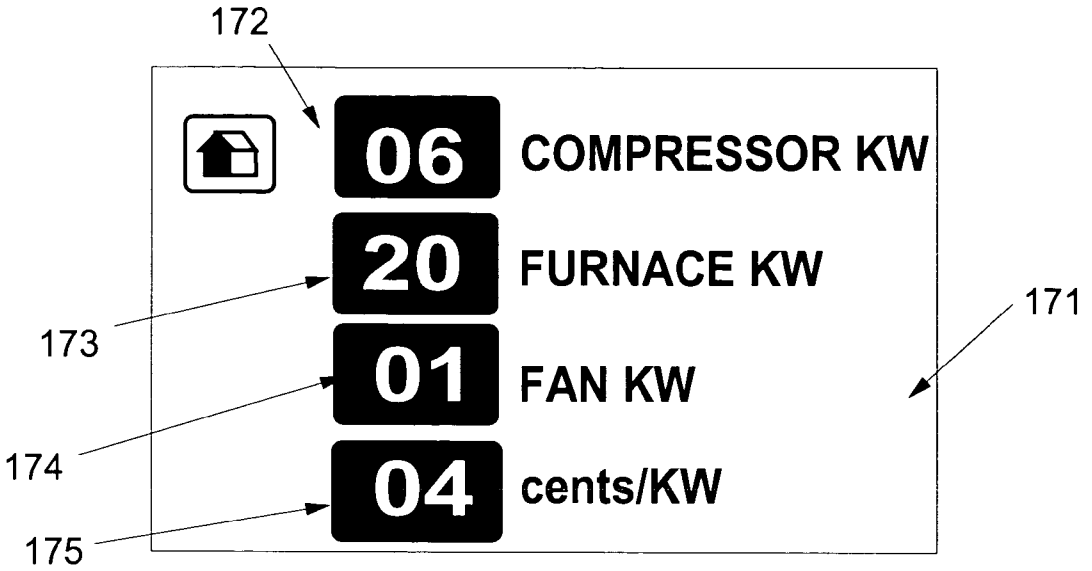
172
06
COMPRESSOR KW
20
FURNACE KW
173
171
01
FAN KW
174
04
cents/KW
175

FIG. 13

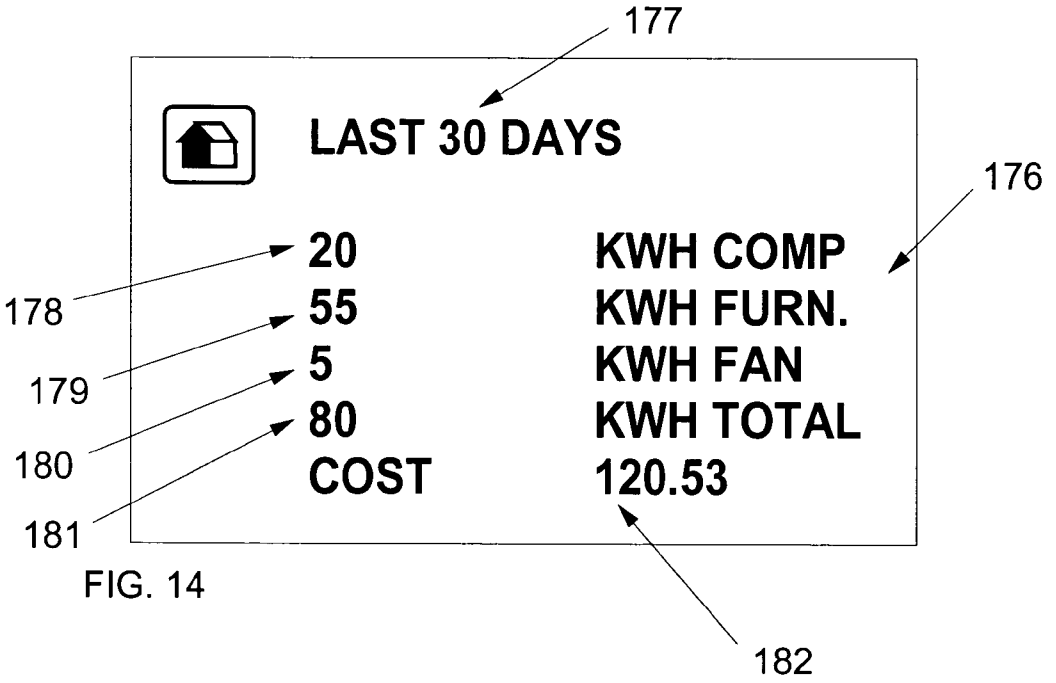
177
LAST 30 DAYS
176
20
KWH COMP
178
55
KWH FURN.
179
5
KWH FAN
180
80
KWH TOTAL
181
COST
120.53
182

FIG. 14

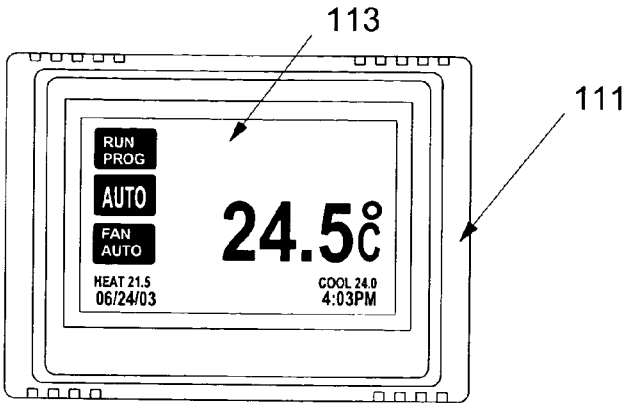

FIG. 15

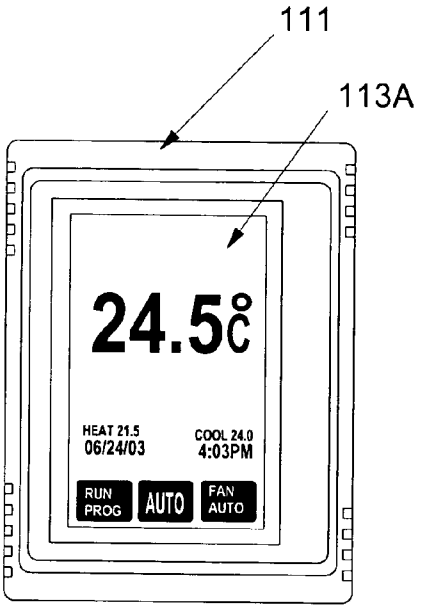

FIG. 16

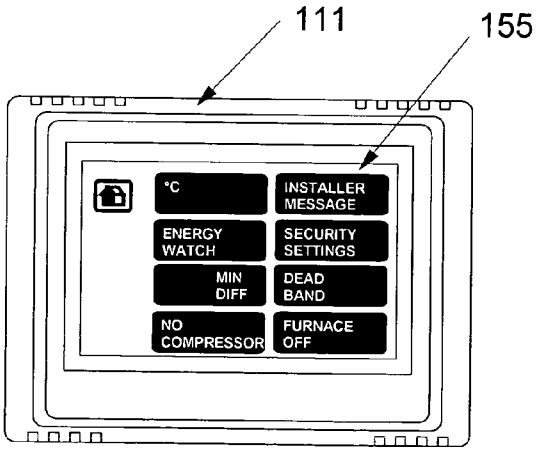

FIG. 17

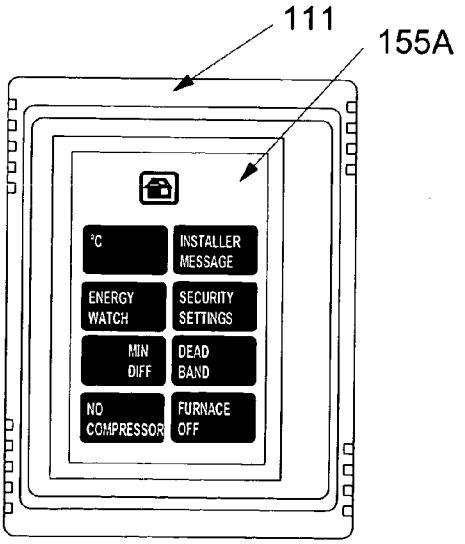

FIG. 18

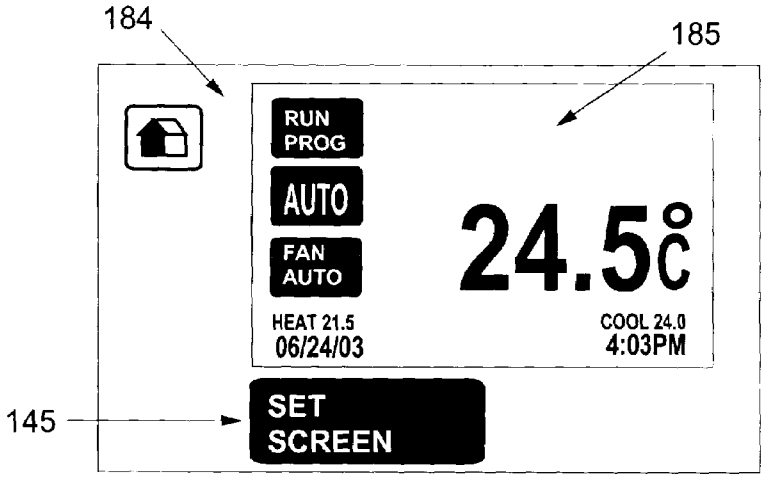
184
185
RUN
PROG
AUTO
FAN
AUTO
24.5°C
HEAT 21.5
06/24/03
COOL 24.0
4:03PM
145
SET
SCREEN

FIG. 19

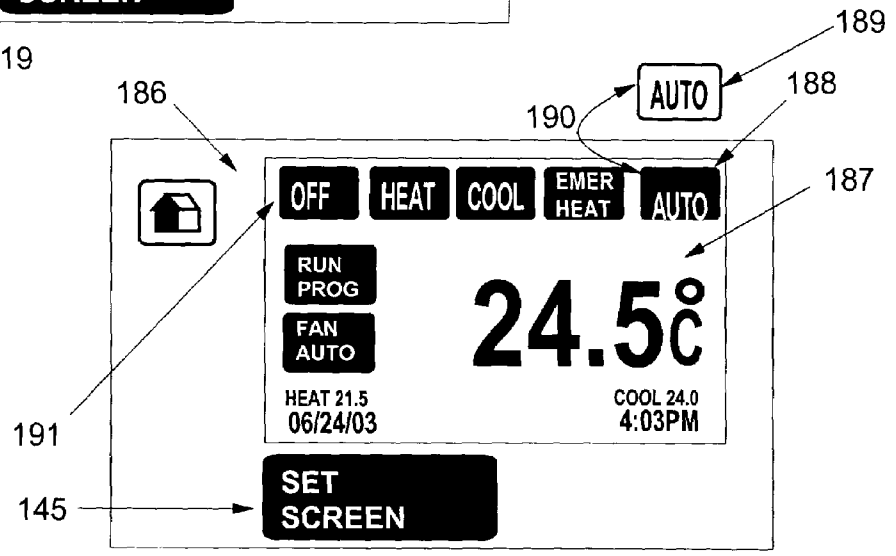
189
AUTO
188
186
190
187
OFF
HEAT
COOL
EMER
HEAT
AUTO
RUN
PROG
FAN
AUTO
24.5°C
HEAT 21.5
06/24/03
COOL 24.0
4:03PM
191
145
SET
SCREEN

FIG. 20

PROGRAMMABLE THERMOSTAT INCORPORATING A LIQUID CRYSTAL DISPLAY SELECTIVELY PRESENTING ADAPTABLE SYSTEM MENUS INCLUDING CHANGEABLE INTERACTIVE VIRTUAL BUTTONS

CROSS-REFERENCE TO RELATED APPLICATIONS

This application is related to: U.S. application Ser. No. 10/654,236, now U.S. Pat. No. 6,786,421, entitled "Programmable Thermostat Including a Feature for Providing a Running Total for the Cost of Energy Consumed During a Given Period for Heating and/or Cooling a Conditioned Space" by Howard B. Rosen, filed on even date herewith; and co-pending U.S. application Ser. No. 10/654,230 entitled "Programmable Thermostat Incorporating a Liquid Crystal Display and Having a Feature for Mounting Horizontally, Vertically and Any Intermediate Orientation" by Howard B. Rosen, filed on even date herewith.

FIELD OF THE INVENTION

The present invention relates to a programmable thermostat incorporating an interactive liquid crystal display (LCD), and, more particularly, to such a thermostat in which the LCD selectively presents adaptable menus, including variable representations of virtual buttons, in order to simplify user programming in accordance with a given environmental control system's configuration.

BACKGROUND OF THE INVENTION

Thermostats have been used for many years as temperature sensitive switches which control heating and/or cooling equipment for conditioning a space in which the thermostat, or a temperature sensor connected to the thermostat, is placed. In the well known manner, a simple thermostat can be adjusted to establish a temperature set point such that, when the temperature in the conditioned space reaches the set point, the thermostat interacts with the heating and/or/cooling equipment to take suitable action to heat or cool the conditioned space as may be appropriate for the season as established by a user.

Modern thermostat systems, which take advantage of the ongoing rapid advances in electronic technology and circuit integration, have many features which provide more precise supervision of the heating and/or cooling equipment to achieve more economical and more comfortable management of the temperature of a conditioned space. Many modern thermostat systems include a real time clock, a memory and a data processor to run a process control program stored in the memory; Such thermostats accurately measure the temperature of a temperature sensor disposed in the conditioned space and make decisions to send control signals to the heating and/or cooling equipment in order to closely control the temperature of the conditioned space. The use of programmed thermostat systems permits anticipating and minimizing hysterisis or overshoot of the temperature in the conditioned space. In addition, the program can specify different set points at different times of the day and week and may also include a "vacation" mode which employs different set points when the conditioned space is not occupied for an extended period.

Many modern thermostat systems are programmable by a user. Typically, prior art programmable thermostat systems

employ a set of fixed position, button-actuated switches to be depressed in a precise sequence to program set points (which may vary with the day of the week) for programmable time periods which may include a vacation mode. The programming sequence may be followed on a separate display, typically an LCD with segmented text characters. In some modern thermostats, "virtual" buttons are presented on the LCD itself which is juxtaposed with a touch pad to effect an interactive touch screen.

There is a fundamental problem with the prior art programmable thermostat systems: they are difficult to program to the extent that some users are unable to successfully program them. This is because the user interfaces which have been employed in prior art programmable interfaces are not highly intuitive. Programmable thermostat systems have incorporated fixed position real or virtual buttons, at least some of which have multi-functions depending upon the point which a user has reached in the programming process. The user must usually refer to and attempt to decipher a programming manual (which is often difficult for the average user to readily understand) as the programming proceeds. But, the programming process is so complex to follow while trying to remember the instructions that many users give up, and the full capabilities of the thermostat system cannot be utilized.

Outside of the art of programmable thermostat systems and programmable thermostats, dot matrix LCDs, which have pixel display elements arranged in rows and columns, are widely used. Dot matrix LCDs are not common as user-visible displays on programmable thermostats for viewing alphanumeric and iconic graphic information although such a thermostat is disclosed in, and particular features claimed in, co-pending U.S. patent application Ser. No. 10/440,474, filed May 15, 2003, and entitled: "Reverse Images in a Dot Matrix LCD for an Environmental Control Device" by Howard B. Rosen, incorporated by reference herein.

This limited use of dot matrix LCDs in programmable thermostats is because of basic engineering and practical considerations. Displayed information for a programmable thermostat generally includes such things as environmental conditions, heating and/or cooling equipment operation or non-operation, operational modes of the thermostat and the like. The most important information in thermostat displays is capable of being formed from segmented alphanumeric characters on less expensive LCDs without dot matrix capability and with reduced requirements for memory and programming.

Thus, dot matrix LCDs have not been widely used in prior art user programmable thermostats through a failure to understand an extended functionality capability of those devices when dot matrix LCDs are employed with a touch pad to effect an interactive display. This extended functionality is exploited to advantage in the present invention both to greatly simplify user programming and to relieve the manufacturer of the necessity to fabricate variants of the thermostat to suit the control and display aspects of various heating and/or cooling environments.

While the present invention may be practiced using segmented LCDs, it is preferably embodied using dot matrix LCDs.

OBJECTS OF THE INVENTION

It is therefore a broad object of this invention to provide a field programmable thermostat which is very easy for a user to program.

It is another broad object of this invention to provide a field programmable thermostat which may be user-configured to limit functionality only as necessary for the specific conditioned space for which the program is being established.

It is a more specific object of this invention to provide a programmable thermostat in which the menus displayed on a touch screen during user programming and temperature adjustment are simplified according to the specific heating and/or cooling system employed in the specific conditioned space for which the program is being established.

SUMMARY OF THE INVENTION

Briefly, these and other objects of the invention are provided by a programmable thermostat system for controlling space conditioning equipment and which includes: a transparent touch pad juxtaposed with an LCD (preferably dot matrix) to constitute a touch screen for interactive interface with a user; one or more environmental condition sensors for providing an electrical signal indicative of the one or more sensed environmental conditions of a conditioned space; and a processor including: a central processing unit, a real time clock, a memory coupled to the central processing unit for storing program and data information and an input/output unit coupled between the processor and the touch screen for carrying out information transfer therebetween.

A program stored in the memory directs the central processing unit to communicate through the input/output unit to selectively: establish on the LCD a representation of at least one virtual button at a predetermined XY position; read the same XY position on the touch pad to determine if the virtual button has been touched; and if the virtual button has been touched, perform a predetermined action such as moving to a different menu and/or changing operating criteria. An alphanumeric message explaining the function of the virtual button is also displayed, and icon indicators may be employed to unmistakably associate a message with a virtual button. Different menus can place the virtual buttons and messages in various positions on the touch screen to facilitate intuitive programming.

In accordance with one aspect of the invention, environmental control selection virtual buttons are added to or eliminated from at least some menus of the operational display during preliminary programming depending on the type(s) of environmental control equipment a user actually has connected with a programmable thermostat. This feature makes ongoing user programming and system management easier and more intuitive and also obviates the need for the manufacturer to fabricate and market multiple models of thermostats with different virtual buttons.

Thus, an image representative of a first virtual button may be shown on the touch screen display with graphics (alphanumeric characters and/or icons) on or closely associated with the first virtual button. The characters/graphics associated with the first virtual button indicate, for example, a current operating state or condition of the programmable thermostat. A user touching the first virtual button causes the device program to change the operating state or condition, and the graphics on the touch screen display also change to indicate the changed operating state or condition.

As an example, a first virtual button may be associated with the word "COOL" to indicate to a user that the programmable thermostat will only operate in an air conditioning mode. In the prior art, touching the first virtual button will shift the programmable thermostat from the air conditioning mode to, for example, a heating mode such that the associated text would change to "HEAT". However, in accordance with the invention, if the user has no heating equipment connected with the programmable thermostat, that fact will have earlier been entered into memory with a menu selection at a different touch screen display during preliminary programming. After that earlier entry indicating that no heater is connected with the programmable thermostat has been made, any user selecting an operating state or condition will not be shown any virtual button indicating that a heating mode is available.

Thus, after a simple, one-time, designation of the environmental control equipment installed in a given system using easy to understand menus, any subsequent user will only have to interact with first virtual buttons representing the actual environmental control equipment under control. It may be noted that this feature of the invention also allows a user to eliminate virtual buttons (and the associated environmental control functions) available at first interaction screens for the programmable thermostat even if the "eliminated" control equipment is actually installed and connected with the programmable thermostat, thereby adding a level of security against use of thermostats one user wants to preclude from use by others.

DESCRIPTION OF THE DRAWING

The subject matter of the invention is particularly pointed out and distinctly claimed in the concluding portion of the specification. The invention, however, both as to organization and method of operation, may best be understood by reference to the following description taken in conjunction with the subjoined claims and the accompanying drawing of which:

FIG. **1**A is a block diagram of a space conditioning system incorporating a programmable thermostat according to the present invention;

FIG. **1** is a partially cut away schematic and top view of a thermostat with a backlit dot matrix LCD employed as a display;

FIGS. **2** and **3** particularly illustrate a magnified section of the thermostat showing two forms of displaying contrast in a dot matrix LCD;

FIGS. **4** and **5** are perspective and front views, respectively, of an exemplary touch screen programmable thermostat of the present invention;

FIG. **6** is an exemplary pictorial of a first level interactive interface displayed on the touch screen;

FIG. **7** is an exemplary pictorial of a second level interactive interface displayed on the touch screen showing exemplary alternate contrast for a touch screen virtual button;

FIG. **8** is an exemplary pictorial of a second level interactive interface displayed on the touch screen with an exemplary sequence of virtual buttons available to a user upon touching a single virtual button;

FIG. **9** is an exemplary pictorial of the second level interactive interface displayed on the touch screen in FIG. **8** with a temporary "confirmation" virtual button for accepting the change of the single virtual button;

FIG. **10** is an exemplary pictorial of a second level interactive interface displayed on the touch screen in FIG. **8** with the function changed from "AUTOMATIC" to "COOL";

FIG. **11** is an exemplary pictorial of a menu displayed on the touch screen to provide a first set of menu selections including an "ADVANCED SETTINGS" virtual button;

FIG. **12** is an exemplary pictorial of another interactive interface displayed on the touch screen showing "ADVANCED SETTINGS" menu selections after the "ADVANCED SETTINGS" virtual button of FIG. **11** has been touched;

FIG. **13** is an exemplary pictorial of yet another interactive interface, reached by touching an "ENEGY WATCH" virtual button displayed on the touch screen, for entering settings for an "energy watch" mode;

FIG. **14** is an exemplary pictorial of a third menu interactive interface displayed on the touch screen for the "energy watch" mode;

FIG. **15** is exemplary pictorial of an interactive interface displayed on the touch screen of FIG. **8** as viewed in the device of FIG. **5** disposed in a horizontal mounting position;

FIG. **16** is exemplary pictorial of the text and graphics of the interactive interface displayed on the touch screen of FIG. **8** rotated for the device of FIG. **5** disposed in a vertical mounting position;

FIG. **17** is exemplary pictorial of an interactive interface displayed on the touch screen of FIG. **12** as viewed in the device of FIG. **5** disposed in a horizontal mounting position;

FIG. **18** is exemplary pictorial of the text and graphics of the interactive interface displayed on the touch screen of FIG. **12** rotated for the device of FIG. **5** disposed in a vertical position; and

FIGS. **19** and **20** illustrate the manner in which different first level interface screens may be reviewed and selected.

DETAILED DESCRIPTION OF THE PREFERRED EMBODIMENT(S)

Referring first to FIG. **1**A, a user programmable thermostat system includes a processor **1**, a touch screen **2** and a temperature sensor **5** which is disposed in a conditioned space **4**. It will be understood that the processor **1** and the touch screen **2** are typically situated in a common housing (shown in an exemplary form in FIG. **5**). The sensor **5** may also be situated in the common housing or remotely as shown, all as very well known in the art. The common housing is usually, but not necessarily, placed in the conditioned space **4**. Thus, those skilled in the art will understand that the block diagram of FIG. **1**A is very general in order to best explain the invention.

The processor **1** includes a central processing unit (CPU) **9** in communication with a memory **8** for storing data and program information and also, via an input/output unit (I/O unit) **10**, a touch pad **11** and an LCD **12** which together constitute the touch screen **2**. The memory **8** may include a read-only part which is factory-programmed to include the process control program and a random-access part which stores data subject to change during operation. A settable real time clock **13** is used to keep time in the thermostat system to facilitate diverse operations, such as establishing different temperature set points (desired temperatures), during different periods of the day cycle. An analog-to-digital converter **27** (which may not be required in all systems) serves to convert any analog information received by the I/O unit **10** to digital information which is suitable for use by the CPU **9**. The thermostat system may be suitably powered by a battery (not shown) and/or from equipment to which is connected.

Temperature information from the sensor **5** and output signals to a space conditioning (heating and/or cooling) unit **3** pass through the I/O unit **10** under control of the CPU **9** executing the process control program stored in the memory **8**. Those skilled in the art will understand that if the correspondents external to the processor **1** communicating with the CPU **9** are all digital in nature (e.g., if the temperature sensor **5** incorporates its own analog-to-digital converter and sends a digital representation of temperature to the processor **1**), then the I/O unit **10** may only constitute simple switching circuits. The LCD may optionally be backlit by any suitable means (not shown in FIG. **1**A).

The heating/cooling equipment unit **3** may include one or more components such as a heater, a compressor-type air conditioner, a heat pump, etc.

Thus, in the usual manner during normal operation, the temperature sensor **5** sends an electrical signal (e.g., if the sensor **5** is a simple thermistor, a resistance value; several types of temperature sensors are widely used) representative of the temperature within the conditioned space **4** which the processor can compare against a previously entered set point to determine if control signals need to be sent to the space conditioning equipment **3**. For example, if the temperature in the conditioned space **4** is found to be too low when operation is in the heating mode, the processor **1** signals the space conditioning equipment **3** to circulate, through ducts **6**, **7**, air from/to the conditioned space **4** which is heated by the space conditioning equipment before return to the conditioned space. This heating phase continues until the sensor **5** indicates that the space is now too hot (or approaching too hot) with reference to the set point such that the processor **1** sends signal(s) to the space conditioning equipment **3** to cease the heating function, all as very well known in the art. In a cooling mode, a counterpart procedure is followed. Those skilled in the art will understand that the control process typically includes such refinements as anticipation, hysterisis accommodation, fan control, etc. which are acknowledged, but are not directly relevant to the invention.

It may be noted that integrated circuit chips including all the processor components with all the necessary interface conditioning circuits are available off-the-shelf and are under constant refinement for increased power. The subject invention only requires the capabilities of a processor such as the processor **1**, and off-the-shelf integrated circuit processor chips may be used to advantage in the subject thermostat system.

Thermostat systems may be user programmable or non-user programmable. The present invention relates to programmable thermostat systems in which, in the prior art, programming steps have been entered using a "tactile" touch pad while observing a display which may be an LCD or some other display type. The drawbacks of the prior art interactive thermostats have been discussed above. The present invention employs a different type of thermostat user interface; viz., the touch screen **2**, in which the touch pad **11** and LCD **12** are integrated and coordinated as will be discussed below and which, in conjunction with the processor **1**, provides a programmable thermostat system which is very much easier to program than in the prior art.

FIG. **1** shows a thermostat **100** having a processor **101** for controlling space conditioning equipment in a manner equivalent to the discussion above. The processor **101** is electrically coupled with multiple connections **102** to a dot matrix LCD **104** whose individual pixels **105** are driven by suitable signals to their respective vertical columns and horizontal rows from the processor **101**. Backlight panel **103** is shown for illustration as separated from a backside of LCD **104** although it is known and preferred that these two components be in close contact. Backlight panel **103** is connected to power and to processor **101** so that it can be turned on or off as needed or desired.

The processor **101** also optionally includes a light sensor (not shown) for sensing the illumination level in the space in which the LCD **104** is located, which illumination may be compared with a previously entered minimum illumination value to determine whether or not the room is darkened or dimly lit. If so, the display image can be reversed to improve readability. Alternatively, as the processor **101** includes a real time clock, an image reversal can be instituted at predetermined times of the 24-hour day.

Thus, FIG. **2** shows section **106** operated as it would typically appear during a daytime or lighted room condition. The display elements of surrounding section **107** are essentially clear and, optionally, backlight panel **103** shines through them to improve readability. The display elements of image section **108** are partially or completely opaque during daytime or in a lighted space. The combination of image section **108** and surrounding section **107** therefore displays system information readily comprehensible and legible to a user in a lighted room.

FIG. **3** shows section **106** operated as it would during nighttime or in a dimly lit room. The image has been reversed such that the display elements of the surrounding section **107** are now partially or completely opaque, and light provided by backlight panel **103** is partially or substantially completely blocked. But, the display elements of image section **108** are now essentially clear, and the light from backlight panel **103** shines through them. The current system information is thereby comprehensible and legible to a viewer in the darkened space. The result of this mode of operation is a dimmer display which is suitable for low lighting conditions.

In another, similar, mode of operation, the reversible image can be repeatedly reversed to "flash" all or selected items of the display upon the occurrence of certain conditions as will be described below.

FIGS. **4** and **5** show an exemplary touch screen thermostat **110** with a housing **111** and touch screen **112** and incorporating the subject invention. Thermostat **110** has no physical buttons at all; rather, all the functions and displayed information of the programmable thermostat are available to a user by observation and interaction with the touch screen **112**. In the example, the touch screen **112** is generally rectangular, thus having a long dimension and a short dimension.

FIG. **6** shows a first pictorial **113** presented on the touch screen **112** and including: a column **114** of interactive virtual buttons **115**, **116**, **117**; a "current temperature" display **139**; a "date" display **119**; a "current time" display **120**; a "heating mode active" display **118**; and a "cooling mode active" display **121**. Pictorial **113** displays the word "AUTO" on virtual button **116** because the thermostat **110** is currently operating in an "automatic" mode to control both a heater and an air conditioner to respective setpoints shown in displays **118** and **121**.

Pictorial **113** is a first level touch screen; i.e., a default first screen that is normally viewed by a user when first approaching the thermostat **110**. The information conveyed to a user, during normal system operation of the exemplary current configuration shown in FIG. **6**, are: current ambient temperature, current date and time, that a heater will turn on with reference to a set point of 21.5° C., that the air conditioning system will turn with reference to a set point of 24.0° C., that the thermostat **110** is operating in the "AUTO" mode where both heating and air conditioning system components are active and that the fan is responding to only the heating and air conditioning modes (i.e., not always running).

When a user touches any active part of the touch screen in pictorial **113**, the overall display changes to pictorial **122**, a second level touch screen shown in FIG. **7**. Virtual buttons **115**, **116**, and **117** still perform the functions described above. Newly-presented virtual buttons **127** and **129** can be selectively touched at temperature displays **128**, and **130**, respectively, to adjust the minimum and maximum set points. FIG. **7** also illustrates that virtual button **116** may be touched and responsively changed in step **123** by the control program to reverse contrast to be shown (in the same position previously occupied by virtual button **116**) as reversed contrast virtual button **124**. In order to attract the user's attention to this button position, reversals can be made in short intervals so that the virtual button **116** appears to be flashing. This "flashing" emphasizes the fact that the thermostat **110** is currently operating in a particular state or condition and that a user may want to change the operating state or condition of the thermostat **110**. Touching virtual button **183** directs the control system to another mode of operation which will be discussed further below.

FIGS. **8** to **10** show pictorial **122** in various interactive conditions. FIG. **8** illustrates that virtual button **116** can undergo step **131** in response to a user touch which also causes a change in the operating state of thermostat **110** and a change of the legend associated with virtual button **116** to one of the virtual buttons in column **132**. In the example, successive steps **133** to **137** indicate that a user has touched virtual button **116** one or more times to cause the operating state of thermostat **110** and the legend of virtual button **116** to change with respect to those steps as follows:

A) at step **137**, from "automatic" mode to "off" mode (none of the environmental control equipment connected with thermostat **110** will operate, and virtual button **116** shows "OFF");

B) at step **133**, from "off" mode to "heat" mode (a heater or a heat pump in heat mode operates to heat the conditioned space, and virtual button **116** shows "HEAT");

C) at step **134**, from "heat" mode to "cool" mode (an air conditioner or heat pump operating in the cooling mode operates to cool the conditioned space, and virtual button **116** shows "COOL");

D) at step **135**, from "cool" mode to "emergency heat" mode (a backup electric heater operates to keep the conditioned space temperature above a lowest set point, and virtual button **116** shows "EMER HEAT"); and

E) at step **136**, from "emergency heat" mode to "automatic" mode (the air conditioner and heater (or heat pump) operates in both the "heat" and "cool" mode, and virtual button **116** shows "AUTO").

FIGS. **9** and **10** illustrate an exemplary operation of changing, confirming and showing the change made by touching virtual button **116** twice. FIG. **9** shows that, under control of the process control program, virtual button **116** has already responded to step **133** to briefly change from the "auto" mode to the "heat" mode on the first touch and, on the second touch, has changed from the "heat" mode to the "cool" mode; and that a temporary active virtual button **138** is now displayed for a user to confirm that the user wishes to select the currently displayed function; i.e., "cool". Touching virtual button **138** under these conditions causes the changes seen in FIG. **10**. It will be particularly noted in FIG. **10** that, as a feature of the system, display **118** has disappeared since the "auto" mode is no longer operational because no heating function is active. Display **121** is still present in FIG. **10** because the "cool" mode is operational. Should the "heat" mode be selected and "HEAT" shown

with virtual button **116**, display **121** will disappear and display **118** will reappear. In the "off" mode, both displays **118** and **121** will disappear.

It will be appreciated that the virtual buttons of virtual buttons column **132** may alternatively be reduced in size and distributed on the surface of pictorial **113** instead of being a set of virtual buttons activated and serially viewable by invoking steps **133**–**137**. If the virtual buttons of virtual buttons column **132** are distributed as separately and simultaneously viewable virtual buttons, it is desirable that the virtual button for the function currently activated for thermostat **110** will "flash" in contrast as described above so that the user will know which of the operating states or conditions are currently controlled by thermostat **110**.

However, it is an important feature of the thermostat **110** that, although a user may touch virtual button **116**, fewer or more than all the virtual buttons of column **132**, in the example, and their associated changes in the normal operation control effected by thermostat **110** may be available to a user. The user has the ability to "edit" and/or simplify the virtual buttons column **132** to reflect the user's environmental control equipment actually connected for control by thermostat **110**.

If fewer than or more than the virtual buttons of virtual buttons column **132** are available to the user, appropriate fewer or more touching steps will be required to cycle through the functions of thermostat **110** and the corresponding legends which may appear with virtual button **116**. The particular sequence of thermostat functions available at steps **133** to **137** is only exemplary of how normal user changes between operating states or conditions are made for thermostat **110**; the virtual buttons of column **132** may, of course, have a different sequence and also reflect various space conditioning equipment components which may be installed in diverse applications.

Thus, as more fully described below, a user is able, typically during a system setup, to eliminate or add to the virtual buttons shown in column **132** (and their associated functions) by using the touch screen in a manner that allows the user to specify what environmental control equipment components are actually controlled by thermostat **110** and, accordingly, included in column **132**.

In practice, the thermostat manufacturer provides, in the control program, control sequences for as many different types of space conditioning components as might be used in widely diverse applications, alone or in combination. During setup, the user of a given installation eliminates those components, and graphics displays related thereto, which are irrelevant to the given installation, thus simplifying later ongoing programming and use of the thermostat. This system setup procedure is instituted by touching the "MENU" button **183** shown in FIG. **7** which the control program responds to by displaying second-level pictorial **140** on the touch screen.

FIG. **11** shows that pictorial **140** displays virtual buttons **141** to **149**. Touching each of buttons **141** to **149** results in a new, usually third level, pictorial screen to show information and/or new buttons as follows:

A) for "home" icon button **141**, a return to the first level, normal operation, pictorial **113** shown in FIG. **6**;

B) for "DATE/TIME SETTINGS" button **142**, for entering current date and time information;

C) for "SET SCREEN" button **145**, for changing screen settings for the touch screen;

D) for "CLEAN SCREEN" button **146** to wipe the screen, e.g., with a lightly dampened cloth, without accidentally changing any of the settings; this function times out after a few seconds;

E) for button "FILTER MONITOR" button **147**, entering, for display at pictorial **113** or similar touch screen, a reminder to change or clean filters on a specified schedule;

F) for "VACATION SETTINGS" button **148**, for entering appropriate vacation system settings;

G) for "PROGRAM SETTINGS" button **143**, for entering automatic temperature set point adjustments, typically for each of four selectable times for each day of the week;

H) for "ENERGY WATCH" button **144**, for display of ongoing energy consumption and costs as discussed further below; and

I) for "ADVANCED SETTINGS" button **149**, for entering the environmental control equipment connected with thermostat **110**, entering energy consumption data and costs and other functions as described.

Touching virtual button **149** results in display of pictorial **150** of FIG. **12**. In a manner similar to button **116** of FIG. **8**, buttons **154** and **158** of FIG. **12** each represents a sequence of buttons that change after being touched by a user. Button **154** represents the presence or absence of air conditioning equipment connected with thermostat **110**. Button **158** represents the presence or absence of heating equipment connected with thermostat **110**.

More particularly, the virtual buttons in column **163** are those that become successively visible when a user successively touches button **154**, also indicating a change in the designation of which cooling equipment is present in a given system. Similarly, in the example, buttons in column **164** are those that become successively visible when a user successively touches button **158**, also indicating a change in the designation of which heating equipment is present in the given system.

In the example, invoking steps **160**, **161** and **162** respectively cause a change in the function and legend appearing at button **154** from "heat pump" mode to "air conditioner" mode, from "air conditioner" mode to "no compressor" mode (no air conditioning equipment), and from "no compressor" mode to "heat pump" mode. The memory program contains programming adapted to cause effective operation of a heat pump or compressor type air conditioner depending on the one selected at button **154**. If the "no compressor" mode is selected at button **154**, the buttons column **132** of FIG. **8** will lack the "cool" and "auto" buttons and functions.

Cycling through steps **165**, **166**, **167**, **168** and **169** respectively cause a change in the function and legend at button **158** from "electric furnace" mode (presence in the given system of an electric powered furnace) to "emer. elect. furnace" mode (additional presence of an emergency electric furnace), from "emer. elect. furnace" mode to "gas furnace" mode (presence of a gas furnace), from "gas furnace" mode to "oil furnace" mode (presence of an oil furnace), from "oil furnace" mode to "furnace off" mode (lack of heating equipment) and from "furnace off" mode to "electric furnace" mode. If the "furnace off" mode is selected at button **158**, the buttons column **132** of FIG. **8** will lack the "heat" and "emer heat" mode buttons and functions as well as the "auto" mode button and function. The control program stored in memory contains routines adapted to cause effective operation of any combination of the designated equipment.

Pictorial **155** of FIG. **12** also shows virtual button **151** for changing the temperature designation in the touch screen from Centigrade to Fahrenheit, buttons **153** and **157** for

entering certain set point related parameters, button **155** for entering an installer message and button **146** for entering security settings.

FIG. **13** shows pictorial **171** which is activated by a user's touching button **152** of FIG. **12**. Pictorial **171** is a menu permitting entry of energy requirement and cost information using cost determination information entry virtual buttons **172**, **173**, **174** and **175**. Touching button **172** changes the numerical legend in increments to indicate kilowatts per hour required of a compressor if air conditioning equipment is present. Thus, the user is able to enter into the energy required for operation of a cooling component in the system. In a similar manner for buttons **173** and **174**, a user can enter the energy requirements for a heating furnace or heat pump if in the system and that of a system fan. Button **175** allows the user to enter the per kilowatt hour cost of energy in the user's locality. The equipment energy requirements and energy cost are stored in the memory and used by the control program to calculate and display cumulative energy used and cumulative cost of that energy for a monitored period. The memory stores in a cumulative amount the periods in which the air conditioner, furnace, heat pump, fan and/or other environmental control equipment operates, and calculates and displays, as shown in pictorial **176** of FIG. **14** the running energy cost information. In the example, display **177** shows the number of days for which the energy information has been accumulated. Displays **178**, **179**, **179**, and **180** show energy used by respectively and cumulatively the air conditioning compressor, the furnace and the fan, with the total energy being used by that equipment in display **181** and the total cost of that energy shown in display **182**.

It will be understood that the user, with a few button manipulations, can easily determine what the running cost is for the use of the environmental control equipment in the user's system. In the example, the user can successively touch: an active part of the touch screen of pictorial **113** of FIG. **6**, the "MENU" button **183** of pictorial **122** of FIG. **8** and the "ENERGY WATCH" button **144** of pictorial **140** of FIG. **11** to arrive at the display of FIG. **14**. Alternatively, the "ENERGY WATCH" button **144** can instead or also be provided on the touch screen of pictorial **113** of FIG. **6** so that a single button touch at the first level interface will bring the touch screen directly to the display of FIG. **14**.

Attention is now directed to FIG. **15** which shows that pictorial **113** has alphanumeric text on the buttons and displays disposed horizontally for easy reading, as does the same alphanumeric text on the same buttons and displays in pictorial **113**A of FIG. **16**. However, the housing **111** of FIG. **15** has been rotated 90 degrees to obtain the vertical orientation of the housing **111** of FIG. **16**. The control program of thermostat **110** can reorient the display from that shown in pictorial **113** to that shown in pictorial **113**A by suitably remapping the column and row drive signals to the individual pixels of the LCD. This feature can be invoked, in one embodiment, by touching the "SCREEN SET" button **145** of pictorial **140** shown in FIG. **11** for a predetermined period of time (say five seconds), which action is sensed by the control program to cause a change of pictorial **113** to pictorial **113**A or vice versa. All the pictorials for the touch screen for the thermostat **110** would be similarly reoriented, and FIGS. **17** and **18** show a similar translation of pictorial **155** to pictorial **155**A.

This feature is not limited to a translation of only 90 degrees of the alphanumeric text, graphics and buttons of thermostat **110** as described above. The memory program, combined with the capability of a dot matrix type LCD, with its individually addressable pixels disposed in rows and columns, can cause a rotation of all those aspects of the touch screen to be rotated incrementally through 360 degrees so that a user can mount the housing **111** in whatever angled orientation is desired.

Attention is now directed to FIG. **19** in which pictorial **184** is obtained by touching the "SET SCREEN" button **145** of pictorial **140** shown in FIG. **11** for a predetermined period of time (say five seconds). This touching action is sensed by the control program which causes a display change from pictorial **140** shown in FIG. **11** to the pictorial **184** shown in FIG. **19**. Pictorial **184** contains a sub-pictorial **185** that is a framed and generalized inactive version of first level interactive pictorial **113** shown in FIG. **6**. The user sees in sub-pictorial **185** a general layout of virtual buttons, text and graphics that can be selected to view as the pictorial of the first level interactive interface. This user selection can be made if the "SET SCREEN" button **145** of pictorial **184** shown in FIG. **19** is not touched for a predetermined period of time (say five seconds). However, the user can select other general layouts of virtual buttons, text and graphics that will thereafter be seen at the first level interactive interface.

Thus, referring now to FIG. **20**. pictorial **186** contains a sub-pictorial **187** that is an alternate general layout of virtual buttons, text and graphics for the first level interactive interface that can be selected by a user. Sub-pictorial **187** appears if virtual button **145** is touched for a predetermined period of time (say five seconds). In sub-pictorial **187**, a row of virtual buttons **191** are aligned along a top part of sub-pictorial **187** which will become the first level interactive interface shown in FIG. **8** when normal operation is resumed. When a return is made to the alternative first level interactive interface, touching any one of the virtual buttons **191** causes the control program of the thermostat to change operating states to one associated with that one virtual button. In one embodiment, a touched virtual button **191** is visually distinguished from the other virtual buttons **191** so the user knows which operating state currently controls the thermostat. One form of effecting that visual distinction is shown for virtual button **188**. Virtual button **188** after being touched causes the control program to change the operating state of the thermostat to an "automatic" mode (the air conditioner and heater together, or a heat pump, operates in both the "heat" and "cool" modes, and virtual button **188** shows "AUTO"). Thereafter, the visible representation of virtual button **188** changes according to step **190** to the contrasting virtual button **189** and back to the form shown for virtual button **188** at short intervals to simulate a "flashing" virtual button. Virtual buttons **191** represent the same operating states represented by the similarly named virtual buttons of virtual buttons in column **132** shown in FIG. **8**.

FIGS. **19** and **20** represent only two of many possible arrangements of virtual buttons, text and graphics that can be made available for selection by a user for the first level interactive interface. In the above exemplary method of making that selection, the user touches or refrains from touching the "SET SCREEN" button **145**. This feature extends the ability of the user to select from one of several arrangements of virtual buttons, text and graphics at any of the levels of interactive or passive (information or graphics only) interface of the thermostat. This feature may be implemented by steps other than touching or refraining from touching the "SET SCREEN" button **145**.

While the principles of the invention have now been made clear in an illustrative embodiment, there will be immediately obvious to those skilled in the art many modifications of structure, arrangements, proportions, the elements, materials, and components, used in the practice of the invention

which are particularly adapted for specific environments and operating requirements without departing from those principles.

What is claimed is:

1. A programmable thermostat system for controlling space conditioning equipment comprising:

A) at least one environmental condition sensor providing an electrical signal indicative of the ambient temperature of a conditioned space in which said environmental condition sensor is situated;

B) a transparent touch pad juxtaposed with a liquid crystal display to constitute a touch screen for interactive interface with a user;

C) a processor, said processor including:

1) a central processing unit;

2) a real time clock;

3) a memory coupled to said central processing unit for storing program and data information; and

4) an input/output unit coupled between said processor and said touch screen for carrying out information transfer therebetween, said input/output unit further including:

a) a sensor input coupled to each said environmental condition sensors for receiving said electrical signal therefrom; and

b) a control output coupled to the space conditioning equipment for issuing control signals thereto; and

D) a control program stored in said memory for causing said central processing unit to communicate through said input/output unit to selectively:

1) establish on said liquid crystal display:

a) a representation of a first virtual button at a first predetermined position on the liquid crystal display; and

b) a first legend indicative of a first control function of said thermostat, which first control function is for controlling a first space conditioning equipment component, which first control function is active when the first legend is viewable;

2) read the position on the touch pad juxtaposed with said first predetermined position on said liquid crystal display to determine if the representation of said first virtual button has been touched;

3) if the first virtual button has been touched:

a) determining that the thermostat has been directed to control a second space conditioning equipment component;

b) activating a second control function for controlling the second space conditioning equipment component; and

c) displaying on said liquid crystal display a second legend indicative of said second control function of said thermostat, which second control function is for controlling the second space conditioning equipment component, which second control function is active when the second legend is viewable.

2. The programmable thermostat system of claim **1** in which said touch screen comprises means for input by a user through the touch screen to establish in said memory which space conditioning equipment components are controllable by said thermostat.

3. The programmable thermostat system of claim **1** in which the space conditioning equipment components include at least one of: a heater, a compressor type air conditioner and a heat pump.

4. The programmable thermostat system of claim **3** in which if the first virtual button is been touched again after step D)3), determining that the thermostat controls a third space conditioning equipment component, activating a third control function for controlling the third space conditioning equipment component, and changing the second legend to a third legend indicative of the third control function of the thermostat.

5. The programmable thermostat system of claim **4** in which one of the space conditioning equipment components is a heater and the graphic includes the word "heat" associated with said virtual button when the heater is controlled.

6. The programmable thermostat system of claim **5** in which said liquid crystal display is a dot matrix type.

7. The programmable thermostat system of claim **4** in which one of the space conditioning equipment components is an air conditioning system and the graphic includes the word "cool" associated with said virtual button when the air conditioning system is controlled.

8. The programmable thermostat system of claim **7** in which said liquid crystal display is a dot matrix type.

9. The programmable thermostat system of claim **4** in which one of the space conditioning equipment components is a heat pump and the graphic includes the word "heat" associated with said virtual button when the heat pump is controlled while operating in its heating mode.

10. The programmable thermostat system of claim **9** in which said liquid crystal display is a dot matrix type.

11. The programmable thermostat system of claim **4** in which one of the space conditioning equipment components is a heat pump and the graphic includes the word "cool" associated with said virtual button when the heat pump is controlled while operating in its cooling mode.

12. The programmable thermostat system of claim **11** in which said liquid crystal display is a dot matrix type.

13. The programmable thermostat system of claim **4** in which said liquid crystal display is a dot matrix type.

14. The programmable thermostat system of claim **1** in which said liquid crystal display is a dot matrix type.

15. The programmable thermostat system of claim **2** in which said liquid crystal display is a dot matrix type.

16. A programmable thermostat system for controlling space conditioning equipment comprising:

A) at least one environmental condition sensor providing an electrical signal indicative of the ambient temperature of a conditioned space in which said environmental condition sensor is situated;

B) a transparent touch pad juxtaposed with a liquid crystal display to constitute a touch screen for interactive interface with a user;

C) a processor, said processor including:

1) a central processing unit;

2) a real time clock;

3) a memory coupled to said central processing unit for storing program and data information; and

4) an input/output unit coupled between said processor and said touch screen for carrying out information transfer therebetween, said input/output unit further including:

a) a sensor input coupled to each said environmental condition sensors for receiving said electrical signal therefrom; and

b) a control output coupled to the space conditioning equipment for issuing control signals thereto; and

D) a program stored in said memory for causing said central processing unit to communicate through said input/output unit to selectively:

1) establish on said liquid crystal display:

a) a representation of a first virtual button at a first predetermined position on the liquid crystal display; and

b) a first legend indicative of a first control function of said thermostat, which first control function is for controlling a first space conditioning equipment component, which first control function is active when the first legend is viewable;

2) read the position on the touch pad juxtaposed with said first predetermined position on said liquid crystal display to determine if the representation of said first virtual button has been touched;

3) if the first virtual button has been touched a predetermined number of times:

a) determining that the thermostat has been directed to control a plurality of space conditioning equipment components;

b) activating a second control function for controlling the plurality of space conditioning equipment components; and

c) displaying on said liquid crystal display a second legend indicative of said second control function of said thermostat, which second control function is for controlling in coordination the plurality of space conditioning equipment component, which second control function is active when the second legend is viewable.

17. The programmable thermostat system of claim **16** in which the plurality of space conditioning equipment components comprise a heating component and a cooling component.

18. The programmable thermostat system of claim **16** in which said liquid crystal display is a dot matrix type.

19. A programmable thermostat system for controlling space conditioning equipment comprising:

A) at least one environmental condition sensor providing an electrical signal indicative of the ambient temperature of a conditioned space in which said environmental condition sensor is situated;

B) a transparent touch pad juxtaposed with a liquid crystal display to constitute a touch screen for interactive interface with a user;

C) a processor, said processor including:

1) a central processing unit;

2) a real time clock;

3) a memory coupled to said central processing unit for storing program and data information; and

4) an input/output unit coupled between said processor and said touch screen for carrying out information transfer therebetween, said input/output unit further including:

a) a sensor input coupled to each said environmental condition sensors for receiving said electrical signal therefrom; and

b) a control output coupled to the space conditioning equipment for issuing control signals thereto; and

D) a program stored in said memory for causing said central processing unit to communicate through said input/output unit to selectively:

1) establish on said liquid crystal display:

a) a representation of a first virtual button at a first predetermined position on the liquid crystal display; and

b) a first legend indicative of a first control function of said thermostat, which first control function is for controlling a first space conditioning equipment component, which first control function is active when the first legend is viewable;

2) read the position on the touch pad juxtaposed with said first predetermined position on said liquid crystal display to determine if the representation of said first virtual button has been touched;

3) if the first virtual button has been touched a predetermined number of times:

a) determining that the thermostat has been directed to refrain from controlling any space conditioning equipment components;

b) activating a second control function which prevents controlling any space conditioning equipment components; and

c) displaying on said liquid crystal display a second legend indicative of said second control function of said thermostat, which second control function is active when the second legend is viewable.

20. The programmable thermostat system of claim **19** in which said liquid crystal display is a dot matrix type.

* * * * *