UNITED STATES PATENT AND TRADEMARK OFFICE

BEFORE THE PATENT TRIAL AND APPEAL BOARD

LENNOX INDUSTRIES INC.,

Petitioner,

v.

ROSEN TECHNOLOGIES LLC,

Patent Owner.

IPR2023-00717
Attorney Docket No.: 018635.0920

PETITION FOR *INTER PARTES* REVIEW OF CLAIMS 1, 3-5, 7, 9, 11, AND 14 OF U.S. PATENT NO. 7,156,318

Mail Stop PATENT BOARD
Patent Trial and Appeal Board
United States Patent and Trademark Office
PO Box 1450
Alexandria, Virginia 22313-1450

TABLE OF CONTENTS

Page

PETITIONER'S EXHIBIT LIST IX

I. INTRODUCTION 1

II. MANDATORY NOTICES UNDER 37 C.F.R. 42.8(A)(1) 1

A. Real Party-in-Interest under 37 C.F.R. 42.8(b)(1) 1

B. Related Matters under 37 C.F.R. 42.8(b)(2) 1

C. Lead and Back-Up Counsel under 37 C.F.R. 42.8(b)(3) 2

D. Service Information under 37 C.F.R. 42.8(b)(4) 3

III. CLAIM LISTING 3

A. Claim 1 3

B. Claim 3 5

C. Claim 4 5

D. Claim 5 5

E. Claim 7 5

F. Claim 9 5

G. Claim 11 6

H. Claim 14 6

IV. REQUIREMENTS UNDER 37 C.F.R. 42.104 6

A. Grounds for Standing 6

B. Identification of Challenge and Statement of Precise Relief Requested 6

V. THE '318 PATENT 7

A. Subject Matter 7

B. Prosecution History 8

C. Priority Date 9

VI. LEVEL OF ORDINARY SKILL IN THE ART 9

VII. CLAIM CONSTRUCTION 9

VIII. SUMMARY OF PRIOR ART 10

A. *Dushane* (EX1004) 10

B. *Geiwitz* (EX1005) 13

1. *Geiwitz* is entitled to the earlier filing date of its provisional application. 15

C. Rosen (EX1009) 16

D. Bier (EX1010) 17

E. Cardio Manual (EX1012) 18

IX. THE ASSERTED GROUNDS OF INVALIDITY 19

A. Ground 1: Claims 1, 3-5, 7, 9, 11 and 14 are obvious over *Geiwitz* in view of *Rosen* and *Bier* and the common knowledge of a POSITA. 19

1. A POSITA Would Have and Could Have Combined *Geiwitz* with *Rosen* and *Bier* 19

a. Rationale and motivation for combining *Geiwitz* with *Rosen*. 19

b. Rationale and motivation for combining *Geiwitz* with *Bier*. 20

2. Claim 1 23

a. 1[Pre]: 23

b. 1[a]: 24

c. 1[b]: 24

d. 1[c]: 27

e. 1[d]: 29

f. 1[e]: 30

g. 1[f]: 32

h. 1[g]: 40

i. 1[h]-1[i] 41

j. 1[j]: 46

k. 1[k]—1[l] 47

l. 1[m]: 48

3. Claim 3: 49

4. Claim 4: 49

5. Claim 5: 51

6. Claim 7: 52

7. Claim 9: 53

8. Claim 11: 54

9. Claim 14: 55

B. Ground 2: Claims 1, 3-5, 7, 9, 11, and 14 are obvious over *Dushane* in view of *Cardio Manual,* and *Bier*. 57

1. A POSITA Would Have and Could Have Combined *Dushane* with *Cardio Manual* 57

2. Claim 1 62

a. 1[Pre]: 63

b. 1[a]: 63

c. 1[b]: 65

d. 1[c]: 68

e. 1[d]: 70

f. 1[e]: 71

g. 1[f]: 72

h. 1[g]: 74

i. 1[h]: 75

j. 1[i]: 77

k. 1[j] 82

l. 1[k]: 84

m. 1[l]: 86

n. 1[m]: 87

3. Claim 3: 87

4. Claim 4: 87

5. Claim 5: 89

6. Claim 7: 90

7. Claim 9: 92

8. Claim 11: 92

9. Claim 14: 93

X. SECONDARY CONSIDERATIONS 94

XI. INSTITUTION SHOULD BE GRANTED 94

A. Discretion Under 35 U.S.C. §314(a) 94

B. Discretion Under 35 U.S.C. §325(d).....98

XII. CONCLUSION 99

TABLE OF AUTHORITIES

Page(s)

CASES

10X Genomics, Inc. v. Bio- Rad Labs,
IPR2020-00086, Paper 8 (P.T.A.B. Apr. 27, 2020) 10

Abbott Diabetes Care, Inc. v. DexCom, Inc.,
IPR2022-00921, Paper 15 (P.T.A.B. Nov. 2, 2022).....10

Apple Inc. v. Fintiv, Inc.,
IPR2020-00019, Paper 11 (P.T.A.B. Mar. 20, 2020).....95

Dynamic Drinkware, LLC v. Nat'l Graphics, Inc.,
800 F.3d 1375, 1379-1381 (Fed. Cir. 2015).....15

Facebook, Inc. v. USC IP Partnership, L.P.,
IPR2021-00033, Paper 13.....96

Gen. Plastic Indus. Co. v. Canon Kabushiki Kaisha,
IPR2016-01357, Paper 19 (P.T.A.B. Sept. 6, 2017).....94

Google LLC v. Parus Holdings, Inc.,
IPR2020-00846, Paper 9 (P.T.A.B. Oct. 21, 2020).....96, 97, 98

Halliburton Energy Servs., Inc. v. U.S. Well Servs., LLC,
IPR2021-01037, Paper 12 (P.T.A.B. Jan. 19, 2022) 96

Micron Tech., Inc. v. Godo Kaisha IP Bridge 1,
IPR2020-01008, Paper 10 (P.T.A.B. Dec. 7, 2020) 96

Micron Technology, Inc. v. Vervain, LLC,
IPR2021-01550, Paper 11 (P.T.A.B. Apr. 11, 2022) 96

Microsoft Corp. v. WSOU Investments, LLC,
IPR2021-00930, Paper 8 (PTAB Dec. 2, 2021) 96

NHK Spring Co. Ltd v. Intri-Plex Techs. Inc.,
IPR2018-00751, Paper 8 (P.T.A.B., Sept. 12, 2018).....95

Nidec Motor Corp. v. Zhongshan Broad Ocean Motor Co. Ltd.,
868 F.3d 1013 (Fed. Cir. 2017) 9

Oticon Med. AB v. Cochlear Ltd.,
IPR2019-00975, Paper 15 (P.T.A.B. Oct. 16, 2019).....98

Qualcomm Inc. v. Apple Inc.,
24 F.4th 1367 (Fed. Cir. 2022) 23, 63

Rosen Technologies LLC v. Lennox Industries Inc.,
Case No. 3:22-cv-00732 (N.D. Tex.) 1

Rosen Technologies LLC v. Resideo Technologies, Inc.,
Case No. 6:22-cv-00131 (W.D. TEX, Feb. 6, 2022).....2

Sand Revolution II LLC v. Continental Intermodal Group-Trucking LLC,
IPR2019-01393, Paper 24 (P.T.A.B. Jun. 16, 2020).....95, 97, 98

Unified Patents, LLC v. Rosen Technologies LLC, IPR2022-01402.....2

Vitronics Corp. v. Conceptronic, Inc.,
90 F.3d 1576 (Fed. Cir. 1996) 32

OTHER AUTHORITIES

35 U.S.C. §102.....10, 13, 16, 17, 18

35 U.S.C. §314(a) 94

35 U.S.C. §318(b) 99

35 U.S.C. §325(d) 98, 99

37 C.F.R. 42.8(a)(1).....1

37 C.F.R. 42.8(b)(1).....1

37 C.F.R. 42.8(b)(2).....1

37 C.F.R. 42.8(b)(3).....2

37 C.F.R. 42.8(b)(4).....3

37 C.F.R. §42.10(b) 3

37 C.F.R. §42.100(b) 9

37 C.F.R. 42.104 6

Office Patent Trial Guide, 77 Fed. Reg. 48759-60 1

PETITIONER'S EXHIBIT LIST

Ex[No.][1]	Description of Documents
1001	U.S. Patent No. 7,156,318 ("'318 Patent")
1002	Declaration of R. Jacob Baker, Ph.D., P.E.
1003	Prosecution File History of the '318 Patent
1004	U.S. Patent No. 6,032,867 ("*Dushane*")
1005	International Patent Application Publication No. 2003/040839 ("*Geiwitz*")
1006	Joint Claim Construction Statement, *Rosen Technologies LLC v. Lennox Industries, Inc.*, No. 3:22-cv-00732-K (N.D. TEXFeb. 2, 2023)
1007	Geiwitz U.S. Provisional Application 60/339,511, filed October 22, 2001 ("*Provisional*")
1008	Transcript of Deposition of Howard J. Rosen, December 14, 2022, *Rosen Technologies LLC v. Lennox Industries, Inc.*, No. 3:22-cv-00732-K (N.D. Tex.) ("Inventor's Deposition")
1009	U.S. Patent Application Publication No. 2003/0142121 ("*Rosen*")

[1] Citations to issued patents (Exhibits 1001, 1004, 1016, and 1019) are made by column and line number. Citations to patent application publications (Exhibits 1009 and 1013) and Exhibits 1002 and 1028 are made by paragraph number. Citations to Exhibits 1005, 1008, and 1015 are to the page and line number. Citations to Exhibits 1006, 1011, 1012, 1017, 1018, 1021, 1022, and 1026 are to the original page numbering in the exhibits. Citations to Exhibits 1003, 1007, 1010, 1014, 1020, and 1023 are to the page number added by the exhibit label.

Ex[No.][1]	Description of Documents
1010	"EmbeddedButtons: Supporting Buttons in Documents" by Eric A. Bier ("Bier"), published October 1992 in *ACM Transactions on Information Systems*, Vol. 10, No. 4, pp. 381-407
1011	Scheduling Order, *Rosen Technologies LLC v. Lennox Industries, Inc.*, No. 3:22-cv-00732-K (N.D. Tex. Sept. 1, 2022)
1012	Cardio Manual
1013	U.S. Patent Application Publication No. 2003/0034898 ("*Shamoon*")
1014	Statutory Disclaimer and Declaration of Howard Rosen entered in U.S. Patent No. 6,824,069 ("The Disclaimer")
1015	International Patent Application Publication No. WO 02/48851 A2 by Smith ("*Smith*")
1016	U.S. Patent No. 5,460,327 ("*Hill*")
1017	IPR2022-01402 Patent Owner's Preliminary Response
1018	IPR2022-01402 Petition
1019	U.S. Patent No. 7,083,109 ("*Pouchak*")
1020	Intel®386ex Data Sheet, May 1996 ("Intel Data Sheet")
1021	Excerpts of *Microsoft Computer Dictionary* (4th ed., 1999)
1022	*Motif Programming Manual*, Volume 6 A by Dan Heller and Paula M. Ferguson ("MOTIF")
1023	Electronic Order Granting Unopposed Motion to Amend Scheduling Order, *Rosen Technologies LLC v. Lennox Industries, Inc.*, No. 3:22-cv-00732-K (N.D. Tex. March 13, 2023)
1024	A Taxonomy of Internet Appliances by Sharon Eisner Gillett, William H. Lehr, John T. Wroclawski, and David D. Clark

Ex[No.][1]	Description of Documents
1025	U.S. Patent No. 7,084,859 ("Pryor")
1026	Plaintiff's Amended Disclosure of Asserted Claims and Preliminary Infringement Contentions, *Rosen Technologies LLC v. Lennox Industries, Inc.*, No. 3:22-cv-00732-K (N.D. Tex. Nov. 21, 2022)
1027	*PC Hardware: A Beginner's Guide* by Ron Gilster
1028	Declaration of Sylvia D. Hall-Ellis, PH.D.

I. INTRODUCTION

Lennox Industries Inc. ("Petitioner") respectfully submits this Petition for *inter partes* review of Claims 1, 3-5, 7, 9, 11, and 14 (the "Challenged Claims") of U.S. Patent No. 7,156,318 (the "'318 Patent"). Petitioner respectfully requests institution of *inter partes* review and a finding that the Challenged Claims are unpatentable.

II. MANDATORY NOTICES UNDER 37 C.F.R. 42.8(a)(1)

A. Real Party-in-Interest under 37 C.F.R. 42.8(b)(1)

The real parties-in-interest are Lennox Industries Inc., Lennox International Inc., Heatcraft Inc., Heatcraft Technologies Inc., and Lennox Procurement Company Inc. Lennox Industries Inc. is the Petitioner. Lennox Industries Inc., Heatcraft Inc., Heatcraft Technologies Inc., and Lennox Procurement Company Inc. are wholly owned subsidiaries of Lennox International Inc. No other parties exercised or could have exercised control over this Petition; no other parties funded or directed this Petition. *See* Office Patent Trial Practice Guide, 77 Fed. Reg. 48759-60.

B. Related Matters under 37 C.F.R. 42.8(b)(2)

As of the filing date of this Petition, and to the best knowledge of Petitioner, the '318 Patent is involved in the following:

Rosen Technologies LLC v. Lennox Industries Inc., Case No. 3:22-cv-00732 (N.D. Tex.) ("NDTX Litigation"). The '318 Patent was first asserted against Petitioner in a Complaint for Patent Infringement filed on March 31, 2022.

Petitioner moved to dismiss the complaint on June 21, 2022. On January 4, 2023, Petitioner's motion to dismiss was granted in part and denied in part.

As of the filing date of this Petition, and to the best knowledge of Petitioner, the '318 Patent has been involved in the following proceeding in which Petitioner was not a party:

Rosen Technologies LLC v. Resideo Technologies, Inc., Case No. 6:22-cv-00131 (W.D. TEX, Feb. 6, 2022) (dismissed on October 27, 2022).

Unified Patents, LLC v. Rosen Technologies LLC, IPR2022-01402. The Board instituted *inter partes* review in IPR2022-01402 on March 23, 2023.

C. Lead and Back-Up Counsel under 37 C.F.R. 42.8(b)(3)

Petitioner provides the following designation of counsel:

LEAD COUNSEL	BACK-UP COUNSEL
David G. Wille (Reg. No. 38,363) **BAKER BOTTS L.L.P.** 2001 Ross Avenue, Suite 900 Dallas, TX 75201-2980 Tel: 214-953-6595 david.wille@bakerbotts.com	Samir A. Bhavsar (Reg. No. 41,617) Tel: 214-953-6581 samir.bhavsar@bakerbotts.com Clarke W. Stavinoha (Reg. No. 71,152) Tel: 214-953-6484 clarke.stavinoha@bakerbotts.com Melissa Muenks (Reg. No. 78,860) Tel: 214-953-6949 melissa.muenks@bakerbotts.com Caroline Duncan (Reg. No. 79,897) Tel: 214-953-6514 caroline.duncan@bakerbotts.com **BAKER BOTTS L.L.P.** 2001 Ross Avenue, Suite 900 Dallas, TX 75201-2980

D. Service Information under 37 C.F.R. 42.8(b)(4)

A copy of this entire Petition, including all Exhibits and a power of attorney, is being served by FEDERAL EXPRESS, costs prepaid, to the address of the attorney or agent of record for the '318 Patent at the USPTO: Marc Hankin, Hankin Patent Law, APC, 12400 Wilshire Boulevard, Suite 1265, Los Angeles, CA 90025; and to the address of the attorney or agent of record for Patent Owner in the NDTX Litigation: Hao Ni, NI, WANG & MASSAND, PLLC, 8140 Walnut Hill Ln., Ste. 500, Dallas, TX 75231.

Please address all correspondence to lead and back-up counsel. Petitioner consents to service at lead counsel's address provided above. Petitioner consents to electronic service, provided it is made to all of the following e-mail addresses:

- david.wille@bakerbotts.com;
- samir.bhavsar@bakerbotts.com;
- clarke.stavinoha@bakerbotts.com;
- melissa.muenks@bakerbotts.com; and
- caroline.duncan@bakerbotts.com.

A Power of Attorney is filed concurrently herewith under 37 C.F.R. §42.10(b).

III. CLAIM LISTING

A. Claim 1

1[Pre]	A programmable thermostat system for controlling space conditioning equipment comprising:

1[a]	A) at least one environmental condition sensor providing an electrical signal indicative of the ambient temperature of a conditioned space in which said environmental condition sensor is situated;
1[b]	B) a transparent touch pad juxtaposed with a liquid crystal display to constitute a touch screen for interactive interface with a user;
1[c]	C) a processor, said processor including: 1) a central processing unit;
1[d]	2) a real time clock;
1[e]	3) a memory coupled to said central processing unit for storing program and data information; and
1[f]	4) an input/output unit coupled between said processor and said touch screen for carrying out information transfer therebetween, said input/output unit further including: a) a sensor input coupled to each said environmental condition sensors for receiving said electrical signal therefrom; and b) a control output coupled to the space conditioning equipment for issuing control signals thereto; and
1[g]	D) a control program stored in said memory for causing said central processing unit to communicate through said input/output unit to selectively:
1[h]	1) establish on said liquid crystal display: a) a representation of a first virtual button at a first predetermined position on the liquid crystal display; and
1[i]	b) a first legend indicative of a first control function of said thermostat, which first control function is for controlling a first space conditioning equipment component, which first control function is active when the first legend is viewable;
1[j]	2) read the position on the touch pad juxtaposed with said first predetermined position on said liquid crystal display to determine if the representation of said first virtual button has been touched;
1[k]	3) if the first virtual button has been touched: a) determining that the thermostat has been directed to control a second space conditioning equipment component;
1[l]	b) activating a second control function for controlling the second space conditioning equipment component; and
1[m]	c) displaying on said liquid crystal display a second legend indicative of said second control function of said thermostat, which second control function is for controlling the second space conditioning equipment component, which second control function is active when the second legend is viewable.

B. Claim 3

3	3. The programmable thermostat system of claim 1 in which the space conditioning equipment components include at least one of: a heater, a compressor type air conditioner and a heat pump.

C. Claim 4

4	4. The programmable thermostat system of claim 3 in which if the first virtual button is been touched again after step D)3), determining that the thermostat controls a third space conditioning equipment component, activating a third control function for controlling the third space conditioning equipment component, and changing the second legend to a third legend indicative of the third control function of the thermostat.

D. Claim 5

5	5. The programmable thermostat system of claim 4 in which one of the space conditioning equipment components is a heater and the graphic includes the word "heat" associated with said virtual button when the heater is controlled.

E. Claim 7

7	7. The programmable thermostat system of claim 4 in which one of the space conditioning equipment components is an air conditioning system and the graphic includes the word "cool" associated with said virtual button when the air conditioning system is controlled.

F. Claim 9

9	9. The programmable thermostat system of claim 4 in which one of the space conditioning equipment components is a heat pump and the graphic includes the word "heat" associated with said virtual button when the heat pump is controlled while operating in its heating mode.

G. Claim 11

11	11. The programmable thermostat system of claim 4 in which one of the space conditioning equipment components is a heat pump and the graphic includes the word "cool" associated with said virtual button when the heat pump is controlled while operating in its cooling mode.

H. Claim 14

14	14. The programmable thermostat system of claim 1 in which said liquid crystal display is a dot matrix type.

IV. REQUIREMENTS UNDER 37 C.F.R. 42.104

A. Grounds for Standing

Petitioner certifies that the '318 Patent is available for IPR and that Petitioner is not barred or otherwise estopped.

B. Identification of Challenge and Statement of Precise Relief Requested

This IPR, supported by the declaration of R. Jacob Baker, Ph.D., P.E. (EX1002), requests cancellation of Claims 1, 3-5, 7, 9, 11, and 14 of the '318 Patent under the following grounds:

Ground	'318 Patent Claims	Basis for Challenge
1	1, 3-5, 7, 9, 11, and 14	Obvious under §103 based on *Geiwitz* in view of *Rosen* and *Bier*
2	1, 3-5, 7, 9, 11, and 14	Obvious under §103 based on *Dushane* in view of *Cardio Manual,* and *Bier*

V. The ’318 Patent

A. Subject Matter

The ’318 Patent concerns “a programmable thermostat” using “virtual buttons” on a touchscreen for control. EX1001, Abs. The ’318 Patent concedes most of the Claim 1 hardware elements were well-known in the prior art. EX1002, ¶¶129-38; EX1001, 1:35-2:9. It admits that “[i]n some modern thermostats, ‘virtual’ buttons are presented on the LCD itself which is juxtaposed with a touch pad to effect an interactive touch screen.” EX1001, 2:6-9.

The apparent alleged point of novelty is using a virtual button to change the thermostat’s mode, with a legend indicating that mode. EX1003, 025; EX1002, ¶¶44-48. This is illustrated below, in which pressing the virtual mode button changes the thermostat mode (e.g., from “Heat” to “Cool”) and a legend associated with the button:

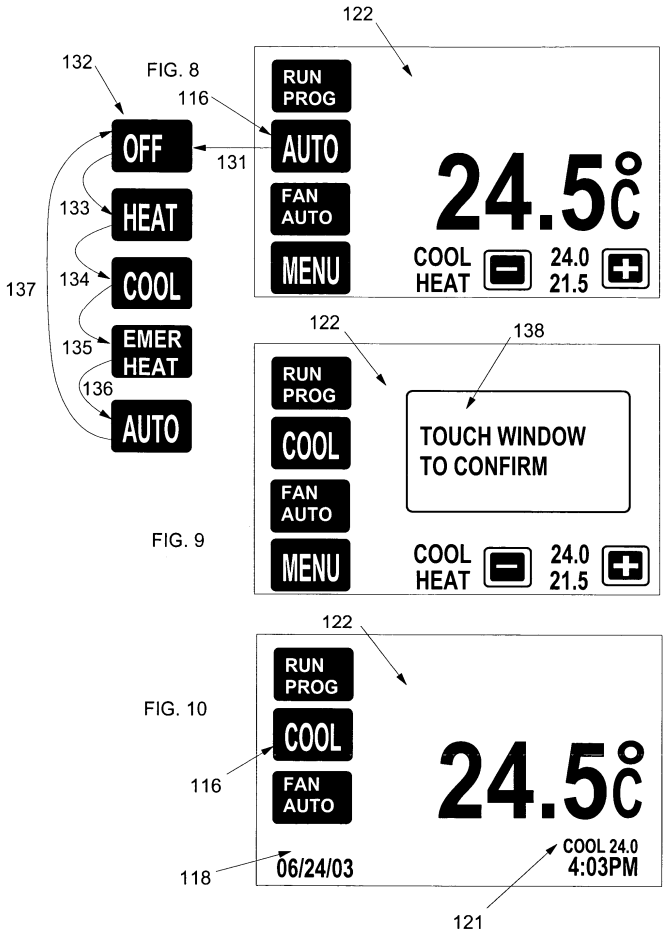

EX1001, Figs. 8-10; 8:51-62.

As will be seen below, Claim 1 claims a thermostat with a virtual button on the touchscreen to change the thermostat's operating mode (heating/cooling etc.) and displays a legend indicative of that mode. *Id.*; *Infra* §IX. Nothing could be more obvious once one decides to use a touchscreen for the thermostat.

B. Prosecution History

The '318 Patent was filed on September 3, 2003. EX1001, Cover. During prosecution, the Examiner never issued a claim rejection. A Notice of Allowance was mailed on October 23, 2006. EX1003, 024. In the Reasons for Allowance,

the Examiner referenced "features recited in section D, subsection 3." *Id.,* 025. Except for *Cardio Manual*, none of the other prior art references relied upon in Grounds 1-2 were considered by the Examiner. *Id.*, 027-030.

C. Priority Date

The '318 Patent originally claimed priority to Application No. 10/060,768, filed on January 30, 2002, but that priority was later disclaimed. *Id.*, 047. Thus, the priority date is no earlier than September 3, 2003.

VI. LEVEL OF ORDINARY SKILL IN THE ART

A person of ordinary skill in the art ("POSITA") as of September 3, 2003, would have had a Bachelor of Science degree in Electrical Engineering or 1-2 years of experience working with or designing processor-based systems with network connectivity. EX1002, ¶¶53-56. This level of skill is approximate, and more experience would compensate for less formal education, and vice versa. *See id.*

VII. CLAIM CONSTRUCTION

Petitioner interprets the claims "in accordance with the ordinary and customary meaning…as understood by one of ordinary skill in the art." 37 C.F.R. §42.100(b). The Board need not construe any term to find the Challenged Claims invalid. *See Nidec Motor Corp. v. Zhongshan Broad Ocean Motor Co. Ltd*., 868 F.3d 1013, 1017 (Fed. Cir. 2017).

In the NDTX Litigation, Petitioner contends the "input/output unit" limitation is indefinite because the input/output unit is part of the processor, and by definition,

cannot be "between said processor and said touch screen" if the input/output unit is part of the processor. EX1006, 47. Petitioner contends "the graphic" in Claims 5, 7, 9, and 11 is indefinite due to lack of antecedent basis. *Id.,* 59-61. Petitioner contends the "sensor input," "control output," and "control program" limitations are governed by §112 ¶6 as means-plus-function terms and are indefinite for lack of structure. *Id.,* 47-59. Patent Owner contends these terms are not indefinite and not means-plus-function terms. *Id.* For purposes of this Petition, Petitioner applies PO's interpretations without conceding that they are correct. The Board has accepted this approach. *See, e.g.*, *10X Genomics, Inc. v. Bio- Rad Labs,* IPR2020-00086, Paper 8 at 21 (P.T.A.B. Apr. 27, 2020); *Abbott Diabetes Care, Inc. v. DexCom, Inc.*, IPR2022-00921, Paper 15 at 7-11 (P.T.A.B. Nov. 2, 2022).

VIII. SUMMARY OF PRIOR ART

Due to the September 3, 2003 priority date, Petitioner relies on pre-AIA provisions for the prior art.

A. *Dushane* (EX1004)

Dushane (U.S. 6,032,867) was filed on September 11, 1998 and published on March 7, 2000, more than one year before the priority date. EX1004, Cover. *Dushane* is prior art at least under 35 U.S.C. §§102(a), (b), and (e).

Dushane describes a programmable thermostat system. *Id.,* 4:37-44. *Dushane* teaches "a mode indication display field 110 which includes 'HEAT',

'OFF', 'COOL' and 'AUTO' sub-fields," where one of the "sub-fields is activated depending upon which operating mode for the controlled apparatuses is selected." *Id.,* 11:19-24.

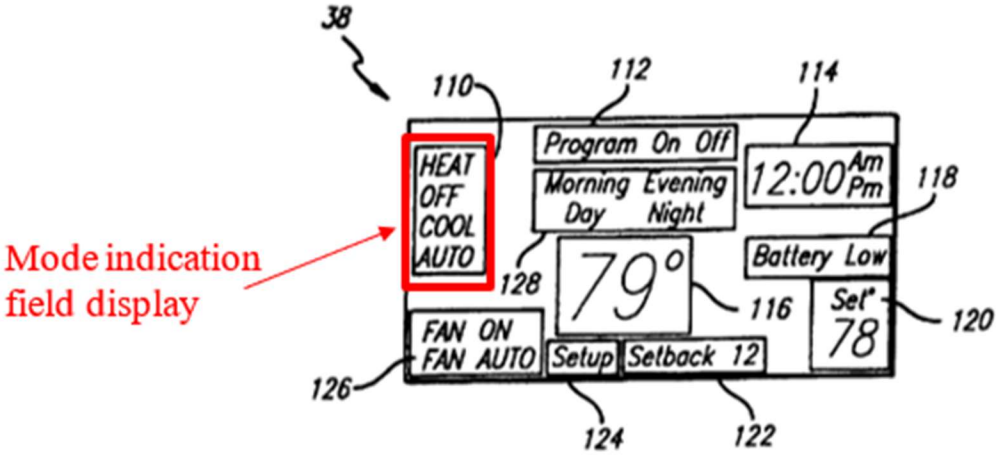

EX1004, Fig. 4 (annotated). Unlike the '318 Patent, *Dushane* employs a physical button 48 (rather than a virtual one) to switch between thermostat modes. *Id.,* Fig. 1a, 12:66-67:

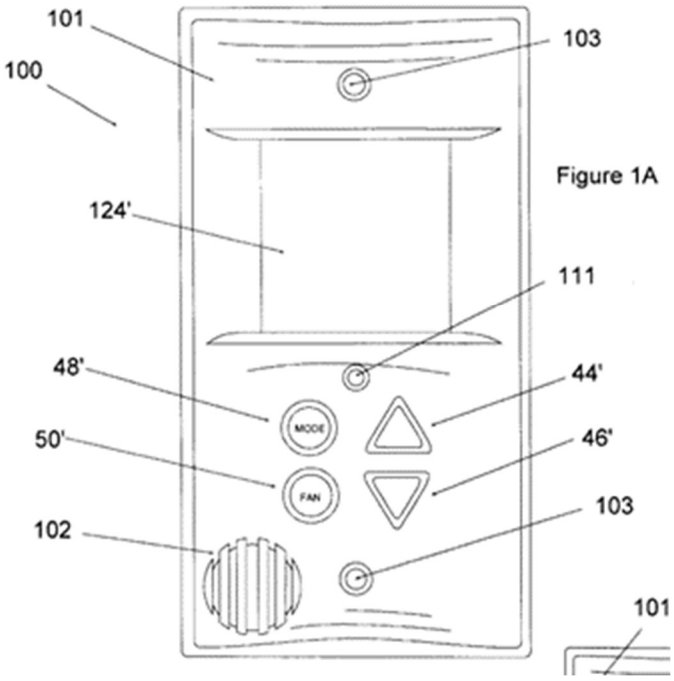

Dushane displays a legend on the LCD screen to tell the user what mode the thermostat is in, as illustrated. *Id.,* Fig. 6, 11:22-34.

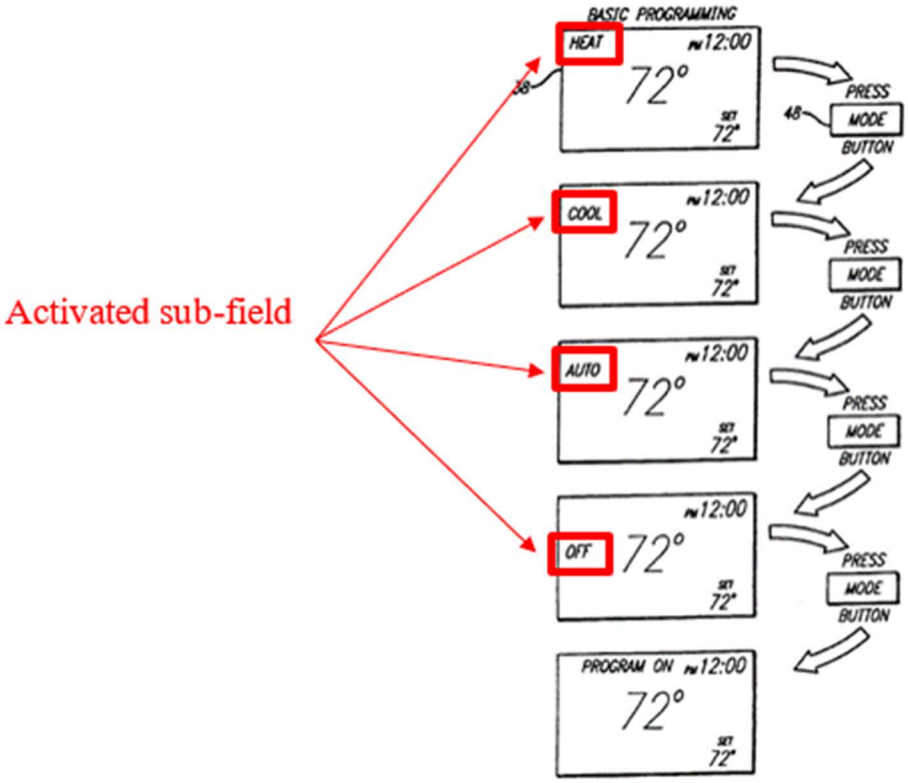

Id., Fig. 6 (annotated). Like the '318 Patent, the legend displayed on the screen changes as the mode button is pressed. *Id.*

B. *Geiwitz* (EX1005)

Geiwitz (WO03/040839) was filed on October 22, 2002 and published on May 15, 2003, before the priority date. EX1005, Cover. *Geiwitz* is prior art at least under 35 U.S.C. §§102(a) and (e).

Geiwitz describes providing direct automation and control of heating, ventilation, and air conditioning (collectively, "HVAC") through a dedicated touchscreen. *Id.,* 3:26-29.

Geiwitz teaches using a virtual mode button to adjust "the operational mode of the controlled HVAC unit" by cycling through options including heat, cool, and auto, shown in Figures 80, 84-85 below. *Id.,* 25:11-12.

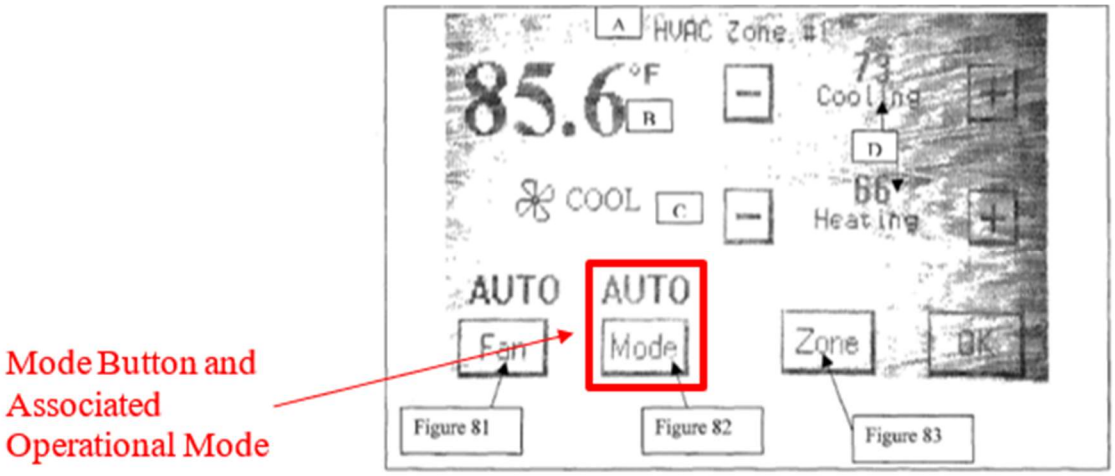

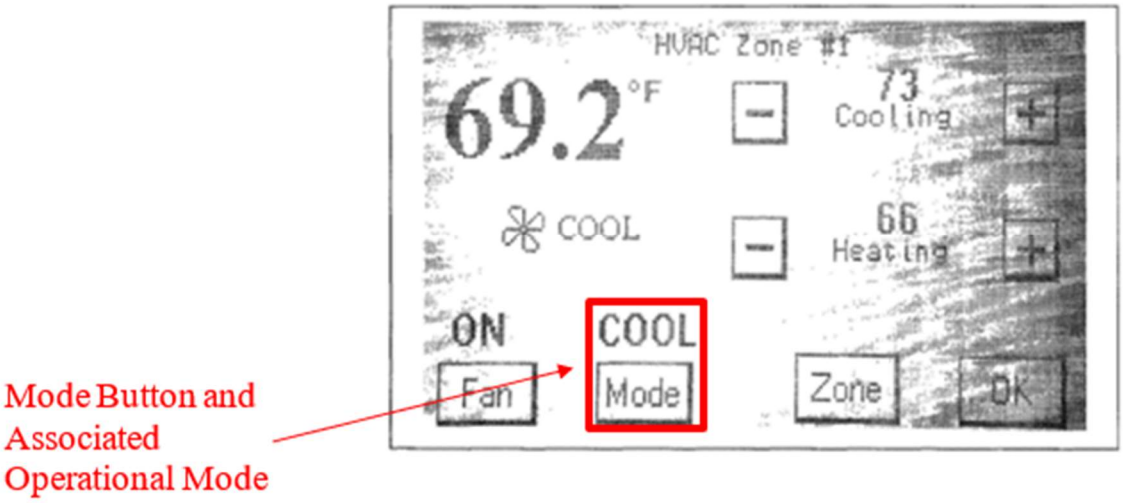

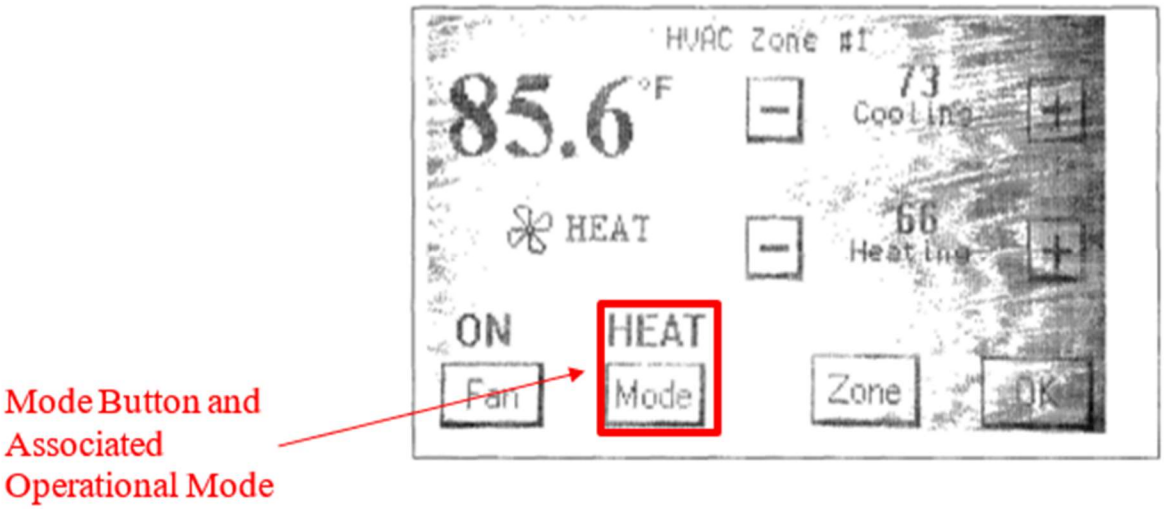

EX1007, 56-58 (annotated). *Geiwitz* discloses the '318 Patent's alleged point of novelty—a virtual mode button and changing legend. EX1002, ¶¶86-90.

1. *Geiwitz* is entitled to the earlier filing date of its provisional application.

Geiwitz claims priority to U.S. Provisional Application 60/339,511, filed on October 22, 2001 (EX1007, "*Provisional*"). EX1005, 1:8-10. The *Provisional* provides written description support for at least one claim of *Geiwitz* and the subject matter in *Geiwitz* relied upon in this Petition was also in the *Provisional*. Accordingly, *Geiwitz* is entitled to the filing date of the *Provisional* as its prior art date. *Dynamic Drinkware, LLC v. Nat'l Graphics*, Inc., 800 F.3d 1375, 1379-1381 (Fed. Cir. 2015).

Geiwitz Claim 1 (EX1005, 40:4-10)	*Provisional* Support (EX1007)
1. A building automation and control system comprising:	Title, 0004
an open architecture system platform in direct communication with a plurality of subsystems or devices located in proximity to a building;	0004, 0010-13, 0413, Fig. 383.
smart card in communication with said system platform for control of said system platform, subsystems or devices, said smart card comprising a programmable microprocessor; and	0007, 0009, 0170-71, 413; Figs. 383, 428, 450- 455.
a touchscreen for user-interface with said system platform.	0008, 0014-16, 0020-22, 0056-58, 0413; Figs. 1-3, 80-85, 125, 200-208, 249, 436-440.

EX1002, ¶91.

C. Rosen (EX1009)

Rosen (U.S. 2003/0142121) published on July 31, 2003, before the September 3, 2003 priority date. EX1009, Cover. *Rosen* is prior art under 35 U.S.C. §102(a).

As illustrated below, *Rosen* discloses essentially the same hardware elements in Claim 1 of the '318 Patent. *Id.*, Fig. 1; EX1002, ¶¶92-96.

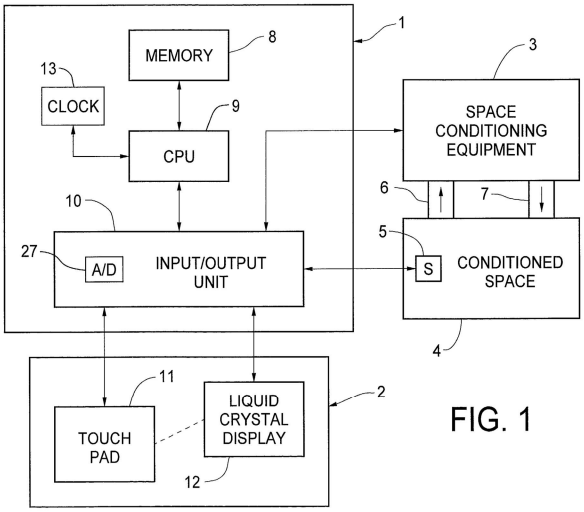

FIG. 1

D. Bier (EX1010)

"EmbeddedButtons: Supporting Buttons in Documents," ("*Bier*") was published in October 1992 in *ACM Transactions on Information Systems*, Vol. 10, No. 4, pp. 381-407. EX1010, 3. *Bier* is prior art at least under 35 U.S.C. §§102(a), and (b). *Bier* was available to the public and accessible to a POSITA through the journal *ACM Transactions on Information Systems* on or shortly after November 18, 1992. EX1028, ¶¶42-49.

Bier relates to virtual buttons that can be used with touchscreens. EX1010, 3-4. These buttons can be used for control purposes. *Id.,* 19. One type of button used for control is "multistate buttons," which have multiple states and a legend on the button itself that changes as the state of the button changes. *Id.*, 8, 20.

E. Cardio Manual (EX1012)

Cardio Manual is a user manual from Secant Home Automation distributed to the public in the United States at least by 1996. EX1014, 5, 8, 10. It is prior art under 35 U.S.C. §§102(a), and (b).

Cardio Manual describes a home automation system having a touchscreen. EX1012, 2. The thermostat screen includes a virtual mode button with a legend indicating the mode. *Id.,* 7.

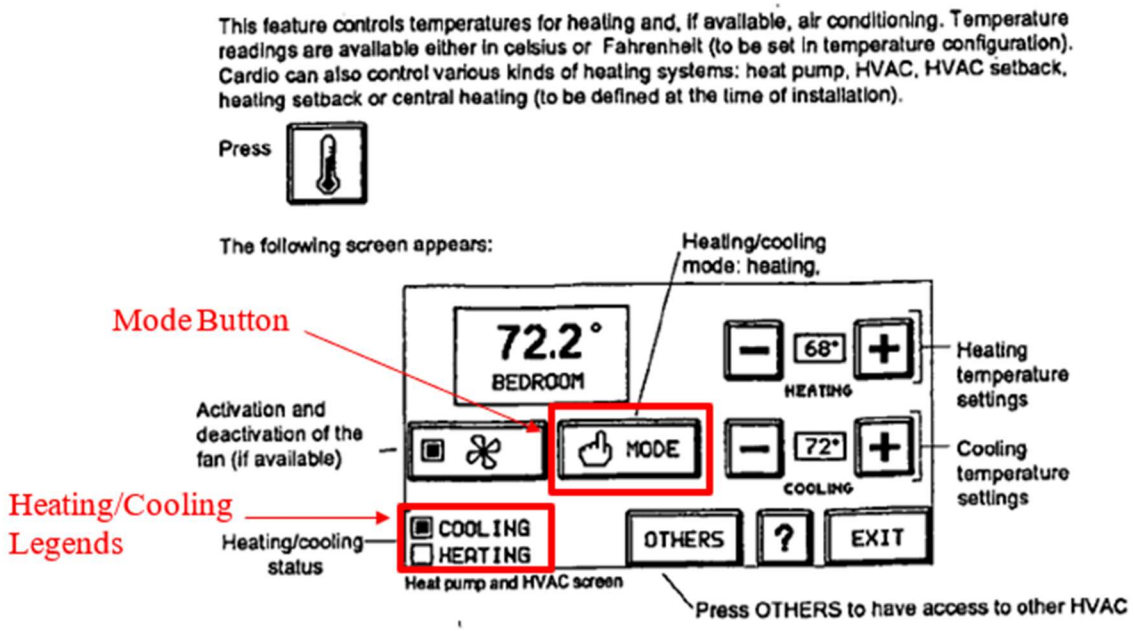

Id. (annotated).

IX. THE ASSERTED GROUNDS OF INVALIDITY

A. Ground 1: Claims 1, 3-5, 7, 9, 11 and 14 are obvious over *Geiwitz* in view of *Rosen* and *Bier* and the common knowledge of a POSITA.

1. A POSITA Would Have and Could Have Combined *Geiwitz* with *Rosen* and *Bier*

a. Rationale and motivation for combining *Geiwitz* with *Rosen*.

It would have been obvious to a POSITA to modify *Geiwitz's* thermostat system to incorporate *Rosen's* touchscreen and other hardware components recited in elements 1[Pre]-1[f]. EX1002, ¶¶106-21. Both references disclose touch screen thermostats and collectively disclose conventional options for implementing hardware elements that were common knowledge to a POSITA. *Id.*, ¶107. Modifying *Geiwitz* to incorporate the touchscreen and other commercially available, off-the-shelf hardware elements of *Rosen* would merely involve the simple replacement of known elements with others to obtain predictable results. *Id.*, ¶¶108-109, 116-117.

Both references are in the same field of endeavor: thermostat systems. *Id.*, ¶110; EX1009, ¶001; *compare id. with* EX1005, 3:26-27; EX1001, 1:25-26.

A POSITA would have been motivated to combine *Geiwitz* with *Rosen*'s touchscreen to improve the ease of programming *Geiwitz*'s thermostat system. EX1002, ¶111. *Rosen's* touchscreen greatly simplifies the user programming experience because "various menus can have ergonomically variously placed

'buttons' along with intuitively variously placed messages associated with each button." EX1009, ¶0037. For at least this reason, a POSITA would have been motivated to modify *Geiwitz* to incorporate the touchscreen of *Rosen*. EX1002, ¶¶109-111. For analogous reasons, a POSITA would have been motivated to modify *Geiwitz's* system to incorporate functionality for interacting with a user via touch screen as taught by *Rosen*. *Id.*, ¶¶112-114, 69-73.

A POSITA would have had a reasonable expectation of success in making the combination. *Id.*, ¶115. A POSITA would have recognized strong similarities between the thermostat systems of *Geiwitz* and *Rosen*, and that *Rosen's* touch screen could be readily incorporated in the thermostat system of Geiwitz. *Id.* A POSITA would have understood using *Rosen's* touchscreen merely substitutes one known prior art interface for another. *Id.* With respect to the other hardware components in elements 1[Pre]-1[f], *Rosen* teaches each was commercially available off-the-shelf prior to the '318 Patent, and therefore a POSITA would have had an expectation of success in combining them with *Geiwitz*. *Id.*, ¶¶116-120; EX1009, ¶0023.

b. **Rationale and motivation for combining *Geiwitz* with *Bier*.**

It would have been obvious to a POSITA to modify *Geiwitz*'s thermostat system to incorporate *Bier's* positioning of legends indicative of a control function directly on the virtual button. EX1002, ¶¶122-28. Modifying *Geiwitz* to

incorporate the positioning of legends as disclosed in *Bier* would merely involve substitution of one known element (*Geiwitz*'s positioning of legends) for another (*Bier*'s positioning of legends) to obtain predictable results (a thermostat system with a legend indicative of the current control function positioned directly on the virtual button, where said legend changes to indicate the current control function). *Id.*, ¶122.

Bier is analogous art to the '318 Patent and *Geiwitz* because it is reasonably pertinent to user interfaces of thermostat systems. EX1005, 3:26-27. *Bier* relates to user interface design in computers—specifically the use of buttons for use in "control panels." EX1010, 3. Thermostat systems conventionally include user interfaces that, like computer interfaces, are designed to be easily programmable by users using virtual buttons. EX1002, ¶123. References discussing the use of virtual buttons in connection with a screen of some type (e.g., a computer) would logically commend themselves to an inventor's attention in considering issues with designing thermostat user interfaces. *Id.*

A POSITA would have been motivated to combine *Geiwitz* with *Bier* to conserve space on *Geiwitz*'s touchscreen. *Id.*, ¶125. *Geiwitz's* legends appear directly above the 'Mode' icon on the screen. EX1007, 57-58.

Figure 84

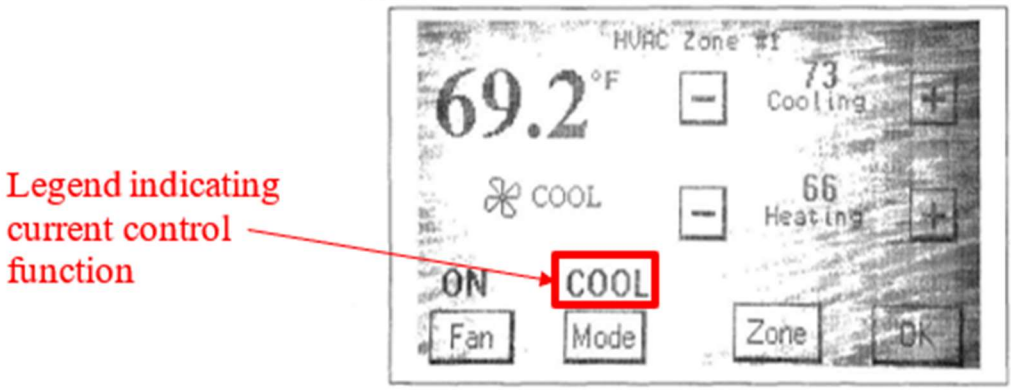

Figure 85

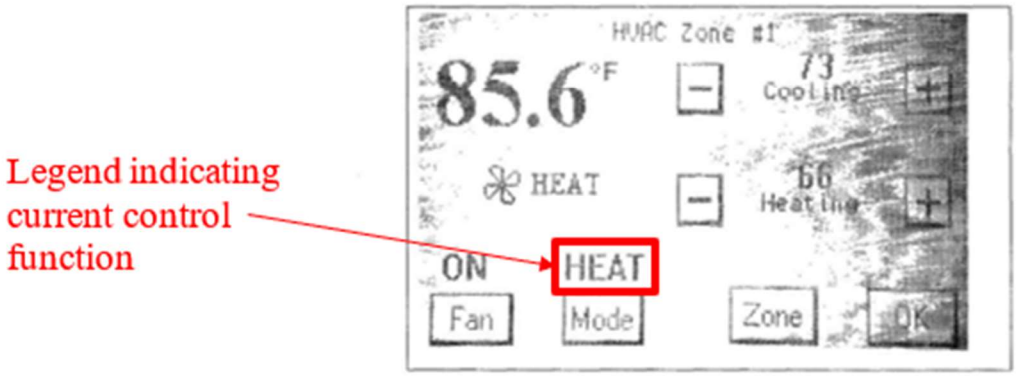

Id. (annotated).

It was well-known that putting the legend on the button itself would save space. EX1002, ¶127. For at least this reason, a POSITA would have been motivated to modify *Geiwitz* to incorporate the legend positioning of *Bier*. *Id.*

A POSITA would have had a reasonable expectation of success in making the combination. *Id.*, ¶128. *Bier*'s virtual buttons with a legend were well-established technology by the priority date of the '318 Patent and would have been straightforward for a POSITA to implement. *Id.* It would have been well within the abilities of a POSITA to modify *Geiwitz*'s thermostat system to include a legend

indicative of the current control function positioned on the virtual button itself as this is a simple software change. *Id.*

2. Claim 1

Each of the seven elements 1[Pre]-1[f] are disclosed by *Geiwitz* alone or in view of *Rosen*, as discussed below. To the extent Patent Owner disagrees, each of these elements is common knowledge of a POSITA as admitted by the '318 Patent. EX1001, 1:35-2:9, 6:11-34; EX1002, ¶¶129-38. Petitioner may rely upon Patent Owner's admissions to "supply a missing claim element." *Qualcomm Inc. v. Apple Inc.*, 24 F.4th 1367, 1376 (Fed. Cir. 2022). This paragraph provides an alternative basis for obviousness with respect to elements 1[Pre]-1[f].

a. 1[Pre]:

If the preamble is limiting, *Geiwitz* discloses it. EX1002, ¶¶139-45. *Geiwitz* discloses a programmable "building automation and control system," including a thermostat system with programmable temperature set points and modes of operation (e.g., "cool," "heat," and "auto"). EX1005, 4:26-27, 25:1-13. Users may program HVAC scheduling events by scheduling thermostat operations and temperature ranges at set dates and times. *Id.,* 30:12-17, 37:27-30; *see* EX1007, ¶¶56, 113-17. *Geiwitz's* system controls "heating, ventilation and air conditioning (HVAC)" equipment, which discloses controlling space conditioning equipment. EX1005, 3:26-27; EX1002, ¶142.

b. **1[a]:**

Geiwitz discloses element 1[a]. EX1002, ¶¶146-48. *Geiwitz's* system has "internal and external temperature sensors." EX1005, 10:30; *see* EX1007, 56. The system monitors a "thermistor that is on the face of touchscreen 28 for a reading of ambient temperature" in the controlled HVAC zone. EX1005, 14:9-10, 25:2-13. A temperature sensor is an "environmental condition sensor." EX1002, ¶146.

A POSITA would have understood that *Geiwitz*'s "thermistor" provides an electrical signal that varies according to the ambient temperature and is therefore indicative of ambient temperature of the conditioned space in which the temperature sensor is situated. *Id.*, ¶147. *Geiwitz's* disclosure is consistent with the '318 Patent's disclosure that the temperature sensor can be "a simple thermistor." EX1001, 6:11-15; EX1002, ¶147.

c. **1[b]:**

Geiwitz or *Geiwitz* in view of *Rosen* discloses element 1[b]. EX1002, ¶¶149-57. According to *Geiwitz*, "[t]ouchscreen 28 functions as the as the primary user interface for the system." EX1005, 19:6-8, 9:15-17, 25:11, Figs. 1, 14; EX1007, 8, 56-58, 1017-21. A touchscreen is an interactive interface. The *Provisional* states "[t]he touch screen functions as the primary user interface." EX1007, 14, 8, 56-58, 1017. Additionally, *Geiwitz*'s Figure 15 shows an "LCD CONNECTOR" in connection with the control circuitry for the touchscreen. EX1005, Fig. 15, 7:7-8.

The Vadj referenced in Figure 15 is a commonly used signal to adjust the contrast of an LCD. EX1002, ¶150. Thus, the touchscreen has an LCD. *Id.*

Based on *Geiwitz's* disclosure that a user interfaces with its programmable thermostat system using a touchscreen with an LCD component, a POSITA would have understood *Geiwitz* as disclosing, or rendering obvious, the claimed "transparent touch pad juxtaposed with" the LCD. *Id.*, ¶151. The following figures from *Geiwitz* and the *Provisional* show virtual buttons visible on the touchscreen, disclosing that the touch pad is transparent. *Id.*

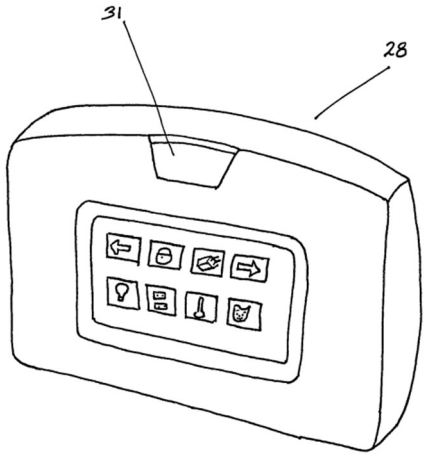

EX1005, Fig. 14.

Figure 93

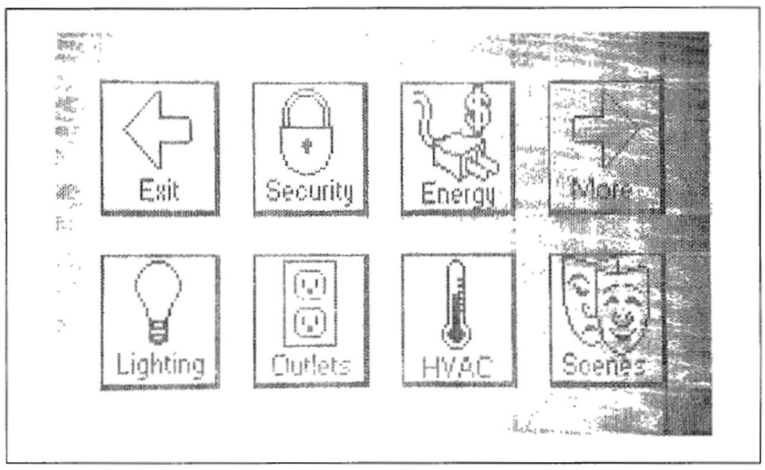

EX1007, 61.

Transparency enables a user to determine where to contact the touchscreen to interface with the system. EX1002, ¶152. A POSITA would have understood the touch-sensitive component (i.e., touch pad) to be juxtaposed with the LCD so the touch pad could register user touches on the LCD screen in the location where virtual buttons are located. *Id.*; *see* EX1005, 25:2-13. These were conventional prior art features of touchscreens. The inventor of the '318 Patent, Mr. Rosen admitted he did not invent a touchscreen juxtaposed with a liquid crystal display, and that before the invention of the '318 patent, such touchscreens were commercially available. EX1008, 158:17-23.

Based on *Geiwitz's* disclosure of using a touchscreen with an LCD component as a user interface for a programmable thermostat system, a POSITA would have understood *Geiwitz* as disclosing, or rendering obvious, the claimed "transparent

touch pad juxtaposed with a liquid crystal display to constitute a touchscreen for interactive interface with the user." EX1002, ¶153.

Additionally, *Geiwitz,* in view of *Rosen*, discloses element 1[b]. *Id.*, ¶¶154-57. *Rosen* includes "a transparent touch pad juxtaposed over a liquid crystal display to constitute a touch screen for interactive interface with a user." EX1009, Abs., Figs. 1-2, ¶¶20, 26.

It would have been obvious for a POSITA to substitute the touchscreen of *Rosen* for that of *Geiwitz* for the reasons stated above and because it is simply a matter of design choice. EX1002, ¶156; *Supra*, §IX.A.1.a.

d. **1[c]:**

Geiwitz or *Geiwitz* in view of *Rosen* discloses element 1[c]. EX1002, ¶¶158-61. *Geiwitz's* system platform is controlled by a "programmable smart card 12," (which qualifies as a processor having the components discussed for 1[c]-1[f]) as shown below. EX1005, 10:19; EX1007, 4, 7, 170-171, 945, 999, 1032; EX1002, ¶158.

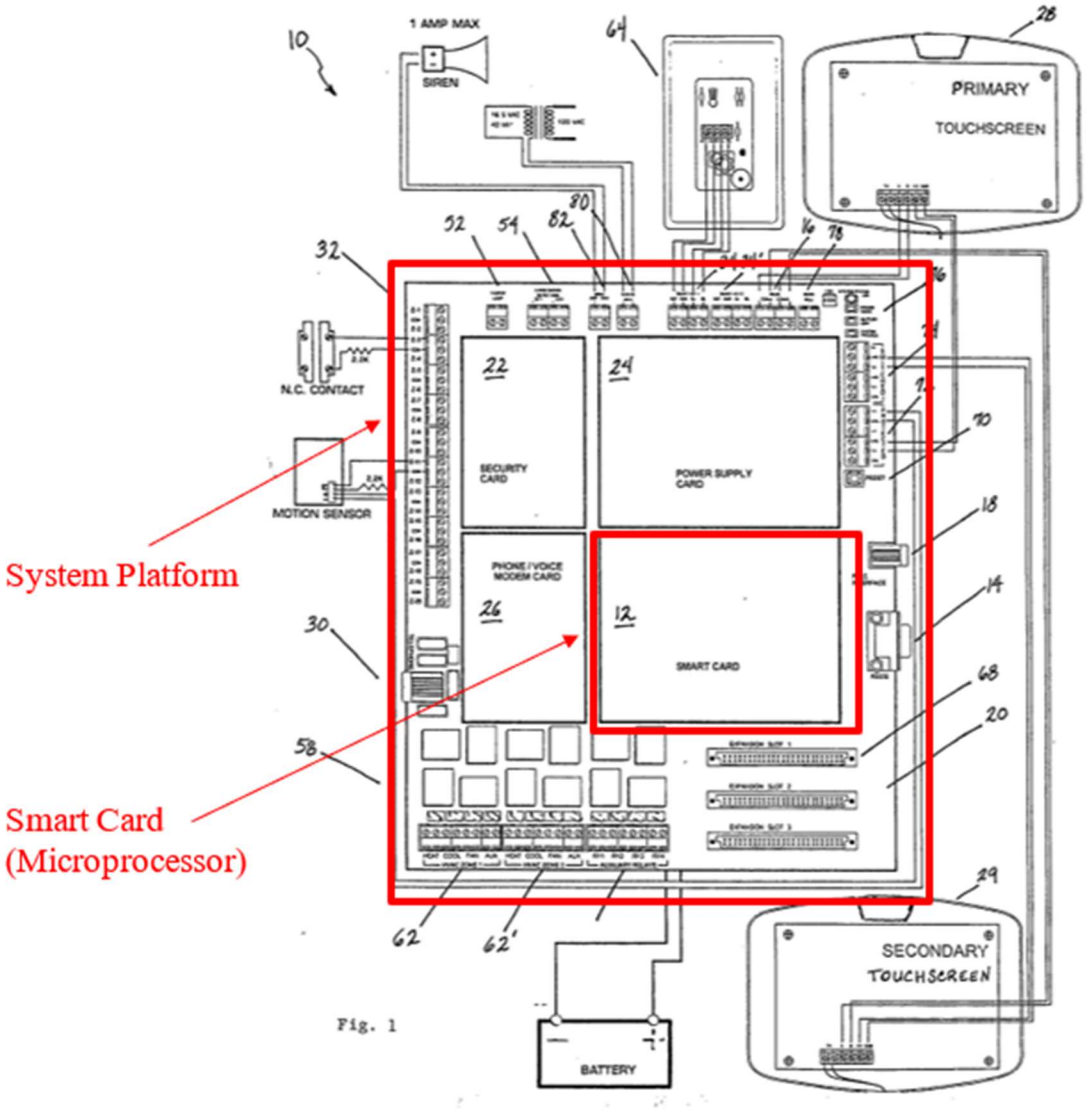

EX1005, Fig. 1(annotated). *Geiwitz*'s smart card contains a CPU as it "comprises an embedded high-speed programmable microprocessor." *Id.,* 4:9-10, 10:21-23, Fig. 21; EX1007, 9, 170-71, 999, 1031-36. Smart card 12 "automatically updates the icons and menus of touch screen 28 as appropriate." EX1005, 10:27. A microprocessor is a central processing unit on a single chip. EX1021, 290; EX1020, 5; EX1002, ¶159. Mr. Rosen agrees that "of course" a CPU could be a

microprocessor. EX1008, 92:24-93:5. *Rosen* also discloses this element. EX1009, ¶¶0007, 0020.

A POSITA would have understood that *Geiwitz*'s system platform containing a smart card microprocessor discloses, or at least renders obvious, a processor having the various components discussed in elements 1[d]-1[f]. EX1002, ¶160.

e. **1[d]:**

Geiwitz or *Geiwitz* in view of *Rosen* discloses element 1[d]. *Id.*, ¶¶162-165. *Geiwitz*'s system includes a "real-time clock circuit," as shown below. EX1005, 16:5-6; EX1007, 9, 113-14, 945, 1033.

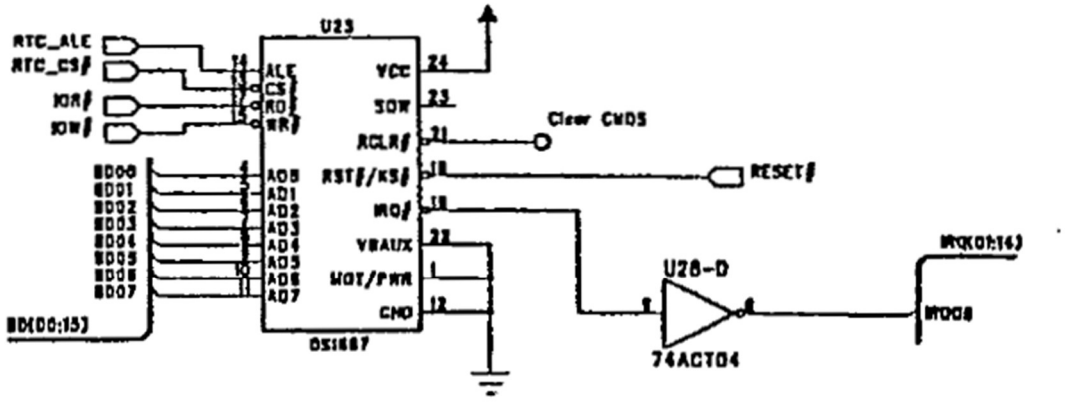

Fig. 22c

EX1005, Fig. 22c. This real-time clock circuit is included on the system platform containing the smart card because the clock circuit shown in Figure 22c depicts multiple simple connections adapted for the circuit board of either the smart card

itself or alternatively, the system platform in Figure 1—both of which are part of the claimed processor. *See id.*, 30:12-17, Figs. 1, 22c; EX1002, ¶163.

Furthermore, *Geiwitz*'s *Provisional* discloses having a "Real-Time clock circuit" as part of the system's processor module. EX1007, 9.

Additionally, this element is disclosed by *Rosen.* EX1009, ¶¶0007, 0020; EX1002, ¶165.

f. **1[e]:**

Geiwitz or *Geiwitz* in view of *Rosen,* discloses multiple options for element 1[e]. *Id.*, ¶¶166-171. *Geiwitz* discloses having an "external flash memory for smart card 12," as shown below. EX1005, 16:4.

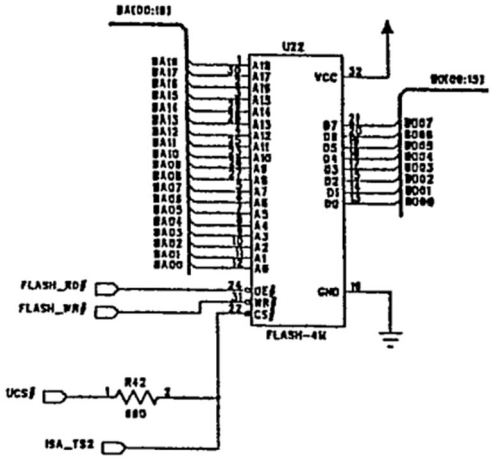

Id., Fig. 22b. It also includes SDRAM memory. *Id.,* Fig. 23b. *Geiwitz* teaches a memory being coupled to a smart card's microprocessor via data and address buses and bus drivers. *Id.*, Figs. 21, 22b, 23b, 24c; *see* EX1008, 91:23-92:23; *Supra*, §IX.A.2.d; EX1007, 4, 9, 14, 23, 56-58, 61, 113-14, 170-71, 1032-33, 1035-36.

The *Provisional* makes clear the memory circuits are disposed on the smart card. EX1007, 9, 1033, 1035-36; EX1005, Figs. 22b, 24c, and 23b.

The memory is coupled to the smart card's microprocessor via buses and bus drivers, which were commonly used by the CPU to provide conventional read/write operations. EX1002, ¶168; *see* EX1005, Figs. 21, 22b, 23b, 24c. A microprocessor cannot function without a program stored in memory to access and execute. EX1002, ¶168.

Geiwitz discloses storing various data and program information in its memory. *Id.*, ¶169. *Geiwitz* describes its smart card as "automatically updat[ing] the icons and menus of touch screen 28 as appropriate." EX1005, 10:27, 19:13-17. Program information would need to be stored to generate these displays. EX1002, ¶169. *Geiwitz* describes having user programming, including adjusting temperature set points and controlling HVAC operations. EX1005, 25:1-13, 19:6-8, 30:12-17, 34:3-5. A POSITA would have understood that these icons, menus, and user programming constitute program information, as the system software program uses these items to render the image displayed on *Geiwitz*'s touchscreen and to control associated HVAC equipment. EX1002, ¶169. It was well-known that data like the current temperature from *Geiwitz*'s thermistor and system status (*see* EX1005, 14:9-10, 25:1-13, 19:8-9) constitutes data information stored in memory. EX1002, ¶169.

It would have been obvious to a POSITA that this program and data information was stored in the memory coupled to *Geiwitz*'s smart card because this was the conventional operation for a CPU like *Geiwitz*'s smart card, and *Geiwitz* taught having its smart card determine its touchscreen system operation. *Id.*, ¶170; EX1005, 10:26-27.

Additionally, this element is disclosed by *Rosen.* EX1009, ¶¶0007, 0020.

g. **1[f]:**

Geiwitz or *Geiwitz* in combination with *Rosen* and the general knowledge of a POSITA discloses element 1[f]. EX1002, ¶¶172-189. The '318 Patent discloses an input/output unit internal to the processor. EX1001, Fig. 1, 5:45-48, 13:15-23. To the extent element 1[f] is amenable to construction, which Petitioner does not admit, it would include the aforementioned preferred embodiment. *Vitronics Corp. v. Conceptronic, Inc.*, 90 F.3d 1576, 1583 (Fed. Cir. 1996). Therefore, an input/output unit internal to a processor may constitute "a processor including an input/output unit coupled between said processor and said touchscreen." *Geiwitz* has an input/output unit internal to the platform having a programmable smart card and provides the communication interface between the components of

that processor and touchscreen, satisfying this element in the same manner as the preferred embodiment. EX1002, ¶172.[2]

The following diagram from Unified Patent's IPR Petition (IPR2022-01402) summarizes how a POSITA would map the components of *Geiwitz* to element 1[f]:

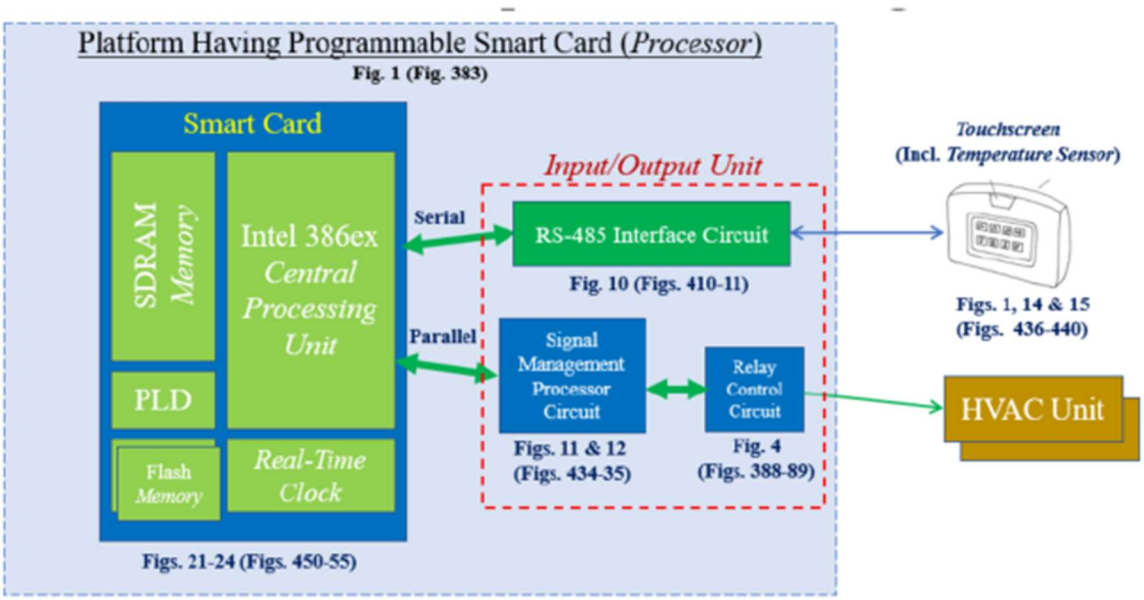

EX1018, 39; EX1002, ¶173.

Geiwitz describes a smart card microprocessor circuit with serial interfaces connected to the RS-485 Circuit for "communicat[ing] with one or more touch screens." EX1005, 9:11-12; Figs. 1, 10, 14-15, 21; EX1002, ¶174. As shown below, the embedded controller on *Geiwitz*'s touchscreen communicates with the RS-485 Circuit. EX1005, 14:6-7.

---

[2] The cited material was also in the *Provisional*. EX1007, 4, 7, 11, 170-71, 413, 945, 983-84, 1017-21, 1032.

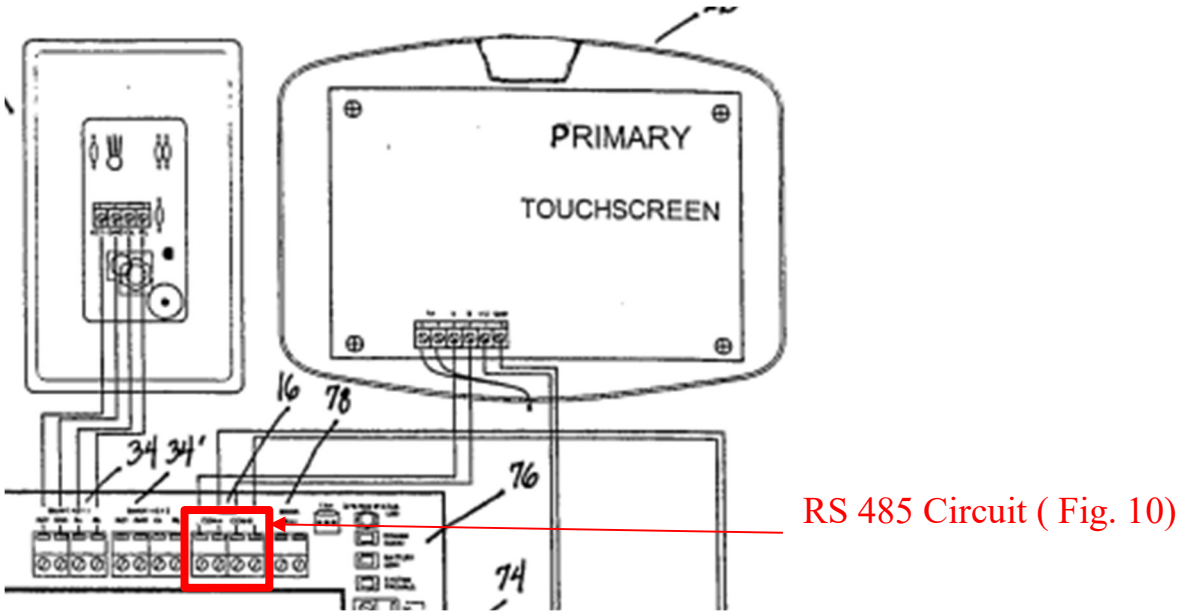

Id., Fig. 1 (partially reproduced, annotated).

Fig. 10, shown below, illustrates how the RS 485 circuit "allows high-speed communication to and from system 10" and the touchscreens. *Id.,* 13:10-11, 9:11-12, 9:5-6.

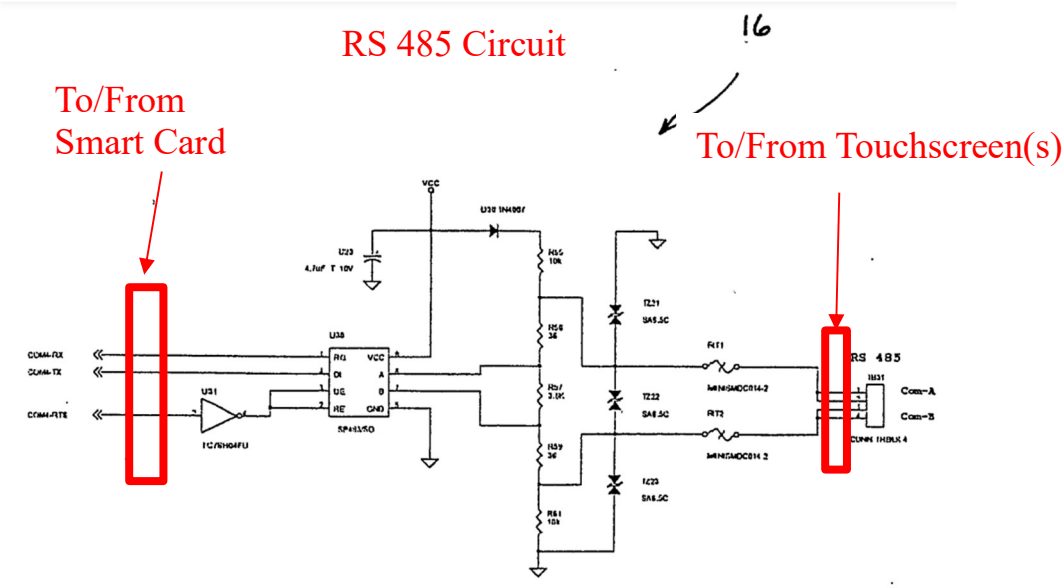

Id., Fig. 10 (annotated).

For example, *Geiwitz*'s RS 485 Circuit allows the transfer of "[g]raphics and video information." *Id.*, 13:11. This information transfer between the smart card and touchscreen includes information necessary for the smart card to control the touchscreen user interface, allowing the smart card to control the HVAC units. *Id.*, 13:10-12, 10:19-27, 9:11-13, 14:7-10. A POSITA would have understood that *Geiwitz'*s RS 485 Circuit functions as an input/output unit coupled between the smart card microprocessor and the touchscreens, allowing communications to be input and output to said microprocessor and touchscreens. EX1002, ¶176.

Geiwitz teaches the claimed sensor input.[3] *Id.*, ¶¶177-182. *Geiwitz* discloses having a thermistor to measure the current temperature. EX1005, 14:9-10; *Supra*, §IX.A.2.b. A controller in communication with the RS 485 Circuit "monitors a thermistor that is on the face of touchscreen 28 for a reading of ambient temperature." EX1005, 14:9-10; 13:10-12. *Geiwitz*'s touchscreen sends an electrical signal indicating temperature measured at its temperature sensor back to the smart card via the RS-485 interface circuit. *See id*, 14:9-10; 13:10-12; EX1002, ¶177. *Geiwitz*'s RS 485 Circuit provides a sensor input. EX1002, ¶177.

To the extent *Geiwitz* does not sufficiently disclose element 1[f], it would have been obvious to a POSITA. *Id.*, ¶179. *Rosen* discloses an input/output

[3] The cited material was also in the *Provisional*. EX1007, 4, 7, 11, 56, 413, 983-84, 1021.

unit meeting all limitations of element 1[f]. EX1009, ¶¶0007, 0020, Claim 1(c)(4); EX1002, ¶179. Figure 1 of *Rosen* and the '318 Patent are identical.

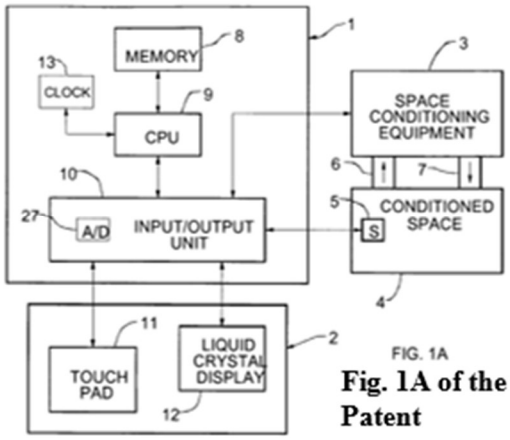

FIG. 1A

Fig. 1A of the '318 Patent

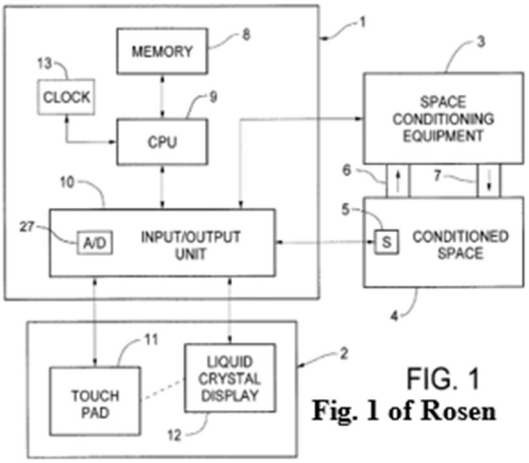

FIG. 1

Fig. 1 of Rosen

EX1009, Fig. 1; EX1001, Fig. 1A.

As discussed above, it would have been obvious to combine *Geiwitz* and *Rosen.* *Supra* §IX.A.1.a. A POSITA would have been motivated to use the input/output unit of *Rosen,* which conveniently combines the input/output functions of the system in a single unit. EX1002, ¶180. It would have been a simple matter of design choice how to handle the inputs and outputs that are controlled by the processor. *Id*. As it would have been obvious to use *Rosen's* touchscreen in *Geiwitz*'s thermostat as discussed above, it would have been equally obvious to control that touchscreen in the same way that *Rosen* did. *Id*.; *Supra*, §IX.A.1.a.

Furthermore, Mr. Rosen admitted there was "nothing new about having an input/output unit that had a sensor input coupled to a temperature sensor." EX1008, 167:20-168:25.

Geiwitz discloses the claimed control output. EX1002, ¶¶183-89. *Geiwitz* discloses having a signal management processor circuit connecting *Geiwitz's* smart card microprocessor to the HVAC and auxiliary relays used to control associated HVAC equipment, as shown below.[4] *See* EX1005, Figs. 4, 11-12.

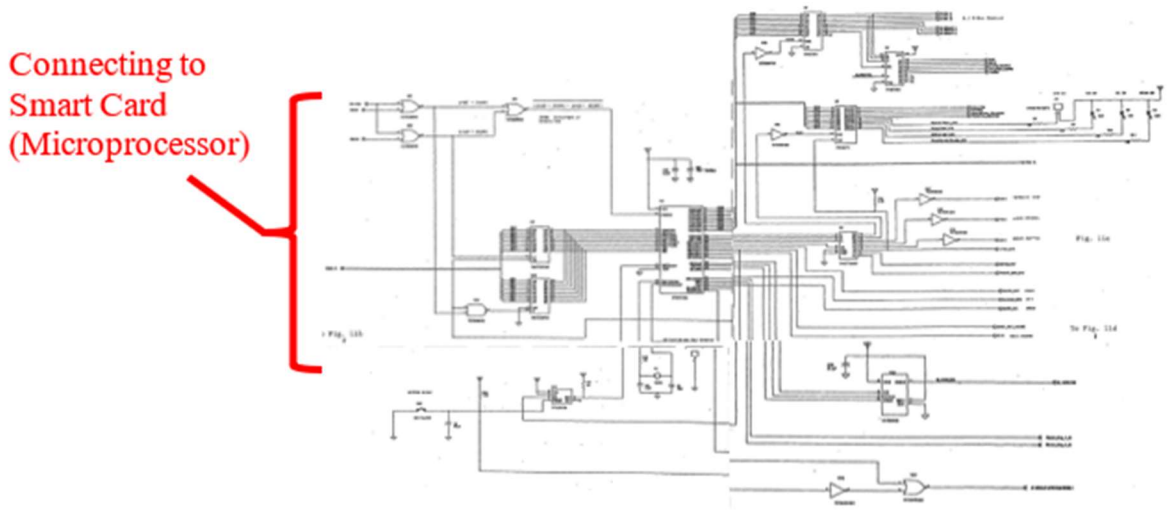

Id., Fig. 11 (annotated). Fig. 4a, shown below, depicts "a schematic of HVAC zone control and auxiliary relays." *Id.,* 6:2-3.

[4] The cited material was also in the *Provisional*. EX1007, 4, 7, 10, 413, 957-60, 1007-16, 1032.

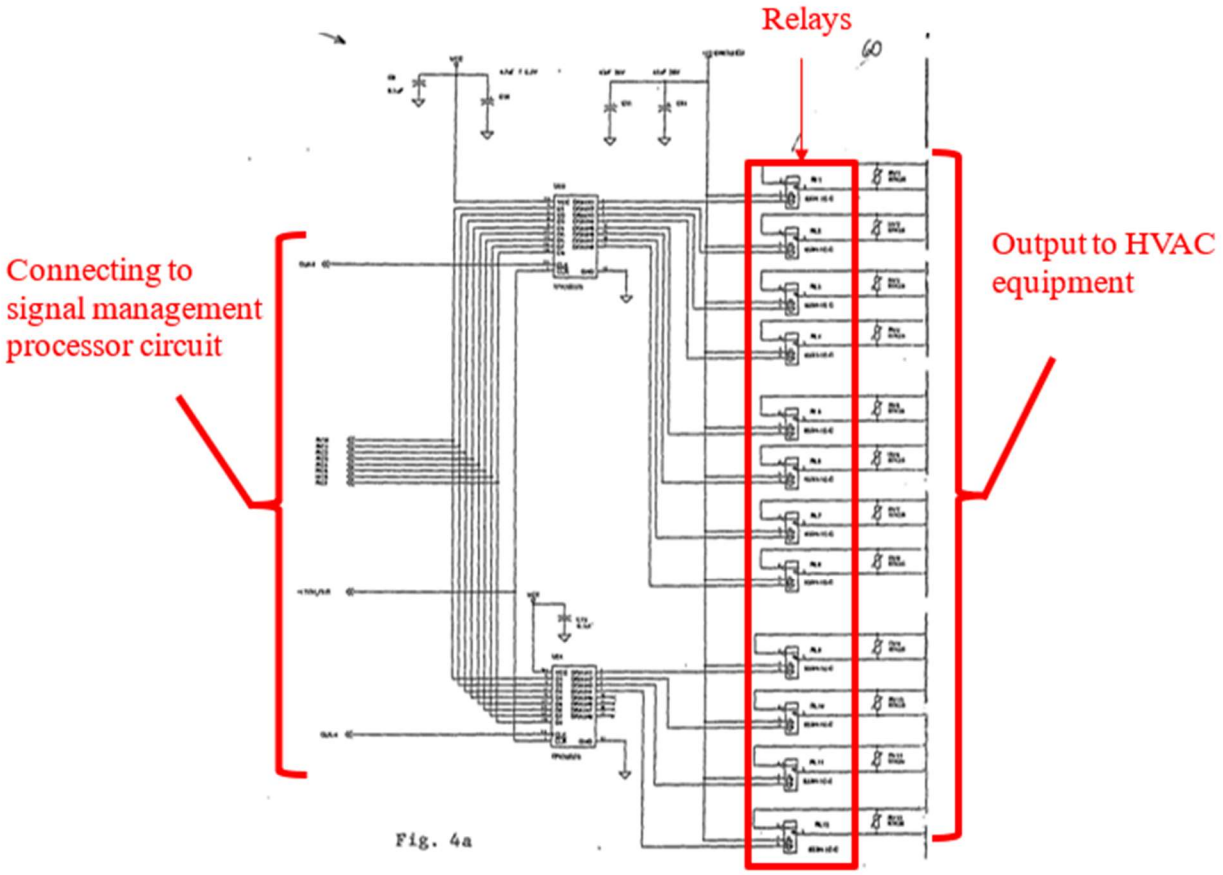

Id., Fig. 4a (annotated). The relays identified in Figure 4a provide signals to HVAC equipment, shown in Figure 4b below. EX1002, ¶184. *Geiwitz* teaches having "HVAC inputs interface with the system through relays… 60." EX1005, 11:23-24. Figure 4b shows how "HVAC zones 62 and 62' provide interface with two separate zones of HVAC equipment within the building." *Id.,* 11:26-27.

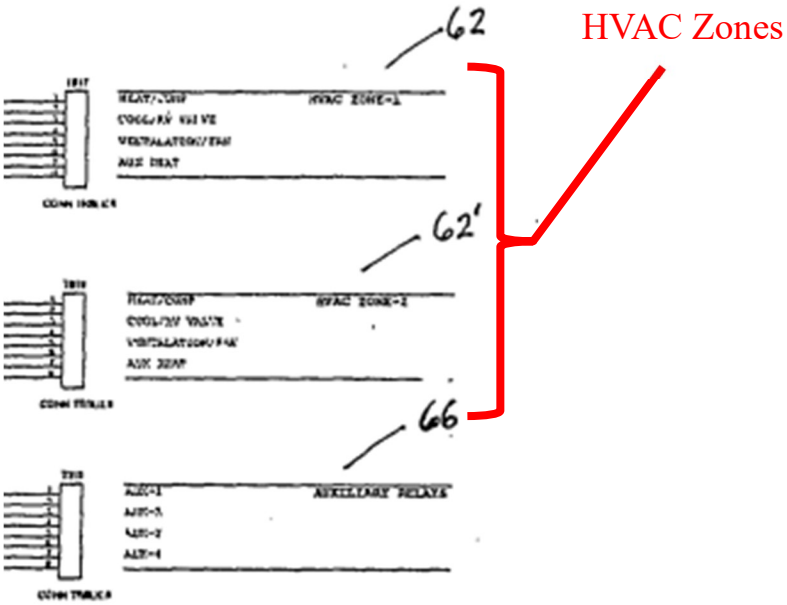

Id., Fig. 4b (partially reproduced, annotated). Manipulating the relays in *Geiwitz* sends control outputs to corresponding pieces of HVAC equipment within the HVAC zones. *See id*, 11:23-27; EX1002, ¶186. *Geiwitz* discloses having an input/output that includes control relays for controlling HVAC equipment—a control output coupled to space conditioning equipment for issuing control signals thereto. EX1002, ¶186.

Alternatively, *Geiwitz* discloses that input/output with HVAC equipment could be via the RS 485 interface, where the RS-485 unit would satisfy the control output limitation. EX1005, 18:17-18; EX1002, ¶187.

To the extent the claim requires an input/output separate from the CPU or a circuit in a single package performing all the claimed functions, this would have

been obvious to a POSITA. EX1002, ¶188. As discussed above, *Rosen* discloses this option. *Supra*, §IX.A.2.g. A POSITA would have understood that various functions in a microprocessor system can be combined onto a single chip/unit or separated into multiple chips/units. *See* EX1008, 100:9-102:1. Deciding which chip is to perform which function was a simple matter of design choice. EX1002, ¶188. It would have been obvious to a POSITA that all the functions performed by *Geiwitz*'s circuitry could be performed by a single input/output unit to the extent *Geiwitz*'s circuitry does not qualify as such. *Id*. Additionally, *Rosen* discloses this element. EX1009, ¶¶0007, 0020, Claim 1(C)(4).

h. **1[g]:**

Geiwitz discloses element 1[g]. EX1002, ¶¶190-94. As described above, *Geiwitz* discloses an RS 485 circuit that is part of the input/output unit to "communicate with one or more touch screens" and the microprocessor. EX1005, 9:11-12, 13:10-11; *Supra*, §IX.A.2.f.[5]

Geiwitz teaches using "software and firmware" (a control program). EX1005, 9:1-2. This software controls the HVAC equipment and touchscreen. *Id.*, 4:9-10, 10:26-27. As discussed above, the software was stored in memory

[5] The cited material was in the *Provisional*. EX1007, 4, 21-58, 140, 170-71, 176, 413.

because a microprocessor operates by executing programming stored in memory. *Supra*, §IX.A.2.e.

Geiwitz discloses "causing said central processing unit to communicate through said input/output unit." As described in §IX.A.2.g, *Geiwitz*'s CPU carried out touchscreen control by communicating via input/output circuitry. EX1002, ¶192; *Supra*, §IX.A.2.g. *Geiwitz*'s software and firmware (control program) would cause the smart card (CPU) to communicate through *Geiwitz*'s input/output unit to selectively perform limitations 1[i]-1[n]. EX1002, ¶192; *Supra*, §IX.A.2.g.

i. **1[h]-1[i]**

Geiwitz or *Geiwitz* in combination with *Bier* discloses elements 1[h]-1[i]. EX1002, ¶¶195-207. *Geiwitz* discloses having a touchscreen with an LCD. *Supra*, §IX.A.2.c. *Geiwitz* discloses a mode icon (virtual button) that can be repeatedly pressed to change the mode of the thermostat, as shown below. EX1005, 25:11-12; EX1007, 56-58; EX1002, ¶195.

Figure 84

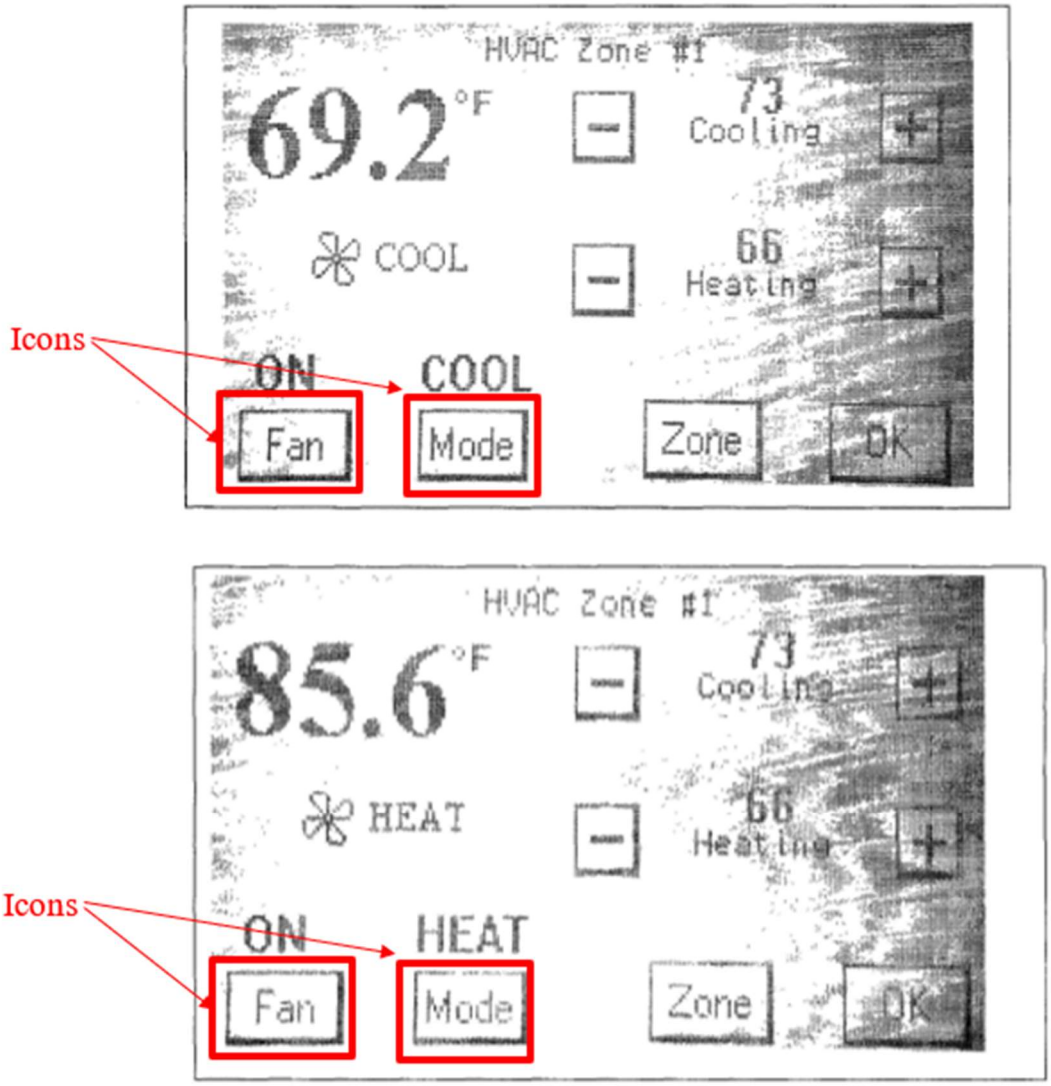

EX1007, Figs. 84-85 (annotated).

A POSITA would have understood *Geiwitz's* mode icon as disclosing the claimed "representation of a first virtual button" on the liquid crystal display, at least because *Geiwitz* describes "pressing" the "icons" just like a button. EX1002, ¶196. "Repeatedly pressing the 'Mode' icon cycles it through the options of cool, heat and auto." EX1005, 25:12. The mode button is "at a predetermined position," given

it appears at a fixed position in Figures 84-85. EX1002, ¶196. A POSITA would have understood *Geiwitz's* control program established the representation of the virtual buttons and legends on the screen. *Id.*, ¶197.

Legends indicating the current control function appear directly above the 'Mode' icon on the screen, as shown below. EX1005, 25:2-13; EX1007, 57-58.

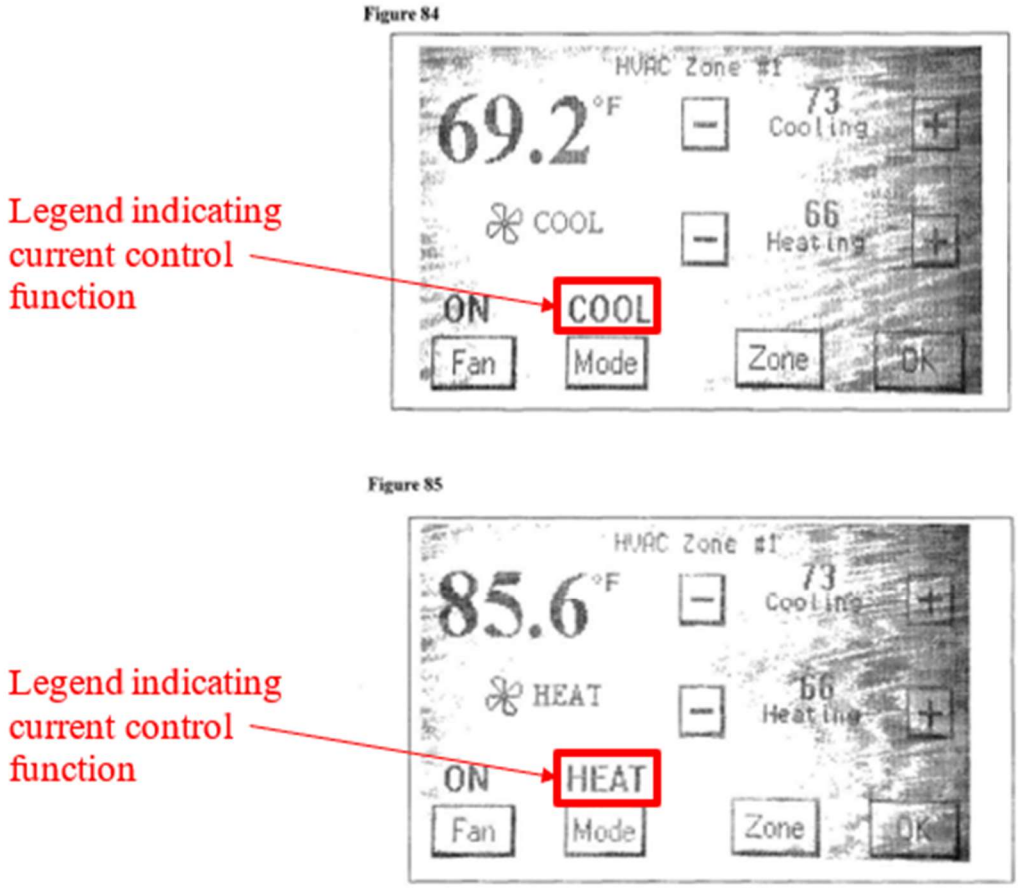

EX1007, Figs. 84-85 (annotated). For example, the legend "COOL" appears, indicating "the system is running the air conditioning to cool the controlled zone." EX1005, 25:5-6. A POSITA would have understood "cool" and "heat" in Figures 84-85 to be legends meeting all the limitations of 1[i]—their appearance on the

screen indicates the active control function and the component being controlled. EX1002, ¶200. A POSITA would have understood the appropriate legend was displayed as the mode icon was pressed because if the legend was not displayed, the user would be left guessing the thermostat's current mode. *Id*. A POSITA would have understood the appropriate equipment became active that corresponded to the displayed mode. *Id.*; *see* EX1005, 25:2-12; Fig. 4b (showing relay connections for equipment); EX1007, 176 (listing common HVAC components).

A POSITA would have understood when the heating legend is displayed, space conditioning equipment that generates heat is being controlled by a first active control function. EX1002, ¶201. Similarly, a POSITA would have understood, or it was at least obvious when the cooling legend is displayed, space conditioning equipment that causes cooling is being controlled by a second active control function. *Id*.

In IPR2022-01402, Patent Owner argued that a "legend" must be "displayed on a virtual button." EX1017, 5. Patent Owner is simply trying to read limitations into the claims to avoid invalidity, which is improper. However, the claim language merely requires the program to establish the legend "on the liquid crystal display." EX1001, 13:34-35. The '318 Patent states the "image representative of a first virtual button may be shown on the touch screen display with graphics (alphanumeric characters and/or icons) on or *closely associated with* the

first virtual button," indicating the legend need not be on the virtual button. *Id.*, 3:53-56.

To the extent that the Board agrees with Patent Owner that a legend must be "displayed on" a virtual button, the claim is still obvious. EX1002, ¶205. Having the legend on the button is simply a matter of design choice and a POSITA would have been motivated to include the legend on the button itself to save valuable real estate on the thermostat screen. *Id*. For example, *Bier* discloses having a legend directly on a virtual button. EX1010, 3; EX1002, ¶205. *Bier* teaches using "multistate buttons," which include a legend that changes state when the button is pressed and causes the system to change state—e.g., the font, color, or text contents of the button can change. EX1010, 8.

When *Bier's* teachings are applied to *Geiwitz*, *Geiwitz's* thermostat system selectively establishes its legends indicative of the current control function on, rather than above, the virtual button, as taught by *Bier*. EX1002, ¶206.

While *Bier* does not directly state the legend can include graphics, it was well-known that a button can include graphics—including graphics that change when the button's state changes. *Id.*, ¶207. For example, *MOTIF* discloses toggle buttons for a user interface that may include a graphic "pixmap" to indicate the button's state.

EX1022, 381.[6] A POSITA would have understood that a "pixmap" is a graphic that can be included on the button. EX1002, ¶207.

j. **1[j]:**

Geiwitz or *Geiwitz* in view of *Rosen* disclose element 1[j]. *Id.*, ¶¶208-11. *Geiwitz* discloses having a touchscreen with an LCD. *Supra*, §IX.A.2.c. *Geiwitz* further discloses having a pressable virtual mode button. *Supra*, §IX.A.2.i.

For a touchscreen to work, it must have a way to determine where a user touched/pressed the touchscreen to determine whether a virtual button was pressed. EX1002, ¶209. Mr. Rosen agreed using a program to read the position of the button on the touch pad to determine if the button had been touched was within the general knowledge of a POSITA. EX1008, 271:7-272:17.

Additionally, a POSITA would have found it obvious that the control program reads the position of the button on the touchscreen to determine if the representation of said virtual icon has been touched. EX1002, ¶210. A program interacting with the touchscreen in this manner was in the general knowledge of a POSITA and would have been an obvious choice to use as some method must be used to determine whether the virtual button was pressed. EX1008, 271:7-272:17; EX1002, ¶210.

---

[6] *MOTIF* was available to the public and accessible to a POSITA through the Morse Library at Beloit College on or shortly after March 2, 1994. EX1028, ¶¶36-41, 49.

Alternatively, *Rosen* discloses this element. EX1009, Abs., ¶0007, Claim 1; EX2002, ¶211. As discussed above, it would have been obvious to incorporate *Rosen*'s touchscreen so a user would interact with the touchscreen as taught by *Rosen*. *Supra* §IX.A.2.c.

k. **1[k]—1[l]**

Geiwitz or *Geiwitz* in view of *Rosen* discloses element 1[k]-1[l]. EX1002, ¶212. *Geiwitz* discloses determining whether a virtual button has been touched. *Supra*, §IX.A.2.i-j. *Geiwitz* taught that from COOL mode, an additional press of the 'Mode' icon would cause the system to enter HEAT mode. EX1005, 25:4-12; EX1007, 56-58, 957-60; EX1002, ¶212. When *Geiwitz*'s system is in COOL mode and thus, "the system is running the air conditioning," it would have been obvious to a POSITA that pressing the 'Mode' icon to switch to HEAT mode would cause the system to determine it has been directed to control a heating apparatus (second space conditioning equipment). EX1005, 25:1-13; Fig. 4 (showing relay connection for heater); EX1002, ¶212. A POSITA would have understood pressing the mode button to enter the heating mode also activates the second control function for controlling the heater as that is the purpose of entering the heating mode. EX1002, ¶212. This would be true for the same reasons discussed above regarding the display of the first legend. *Supra,* §IX.A.2.i-j.

l. **1[m]:**

Geiwitz, or *Geiwitz* in view of *Rosen,* and *Bier* discloses element 1[m]. EX1002, ¶¶213-16. As explained above, *Geiwitz* discloses displaying a "cool" legend in COOL mode and a "heat" legend in HEAT mode. EX1007, 56-58; *Supra*, §IX.A.2.i. A POSITA would have understood the cool/heat legends constitute a first and second legend which each indicate the current control function of the thermostat and this control function is active when those legends are displayed on the LCD. EX1002, ¶213; *Supra*, §IX.A.2.i.

Figure 84

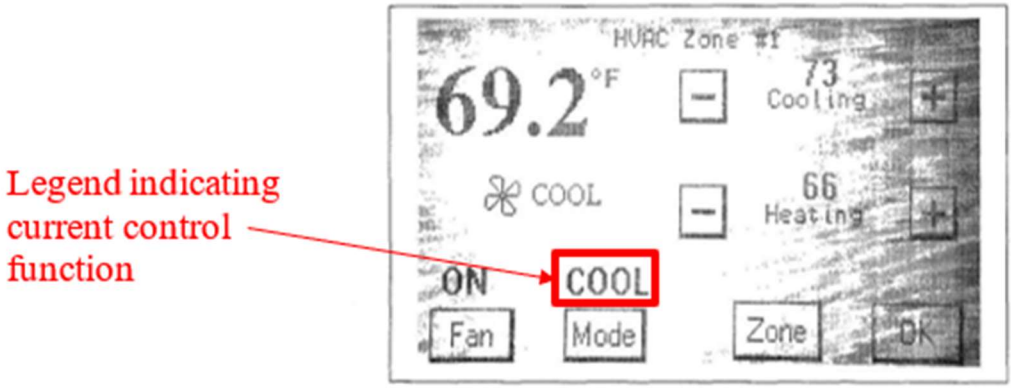

Figure 85

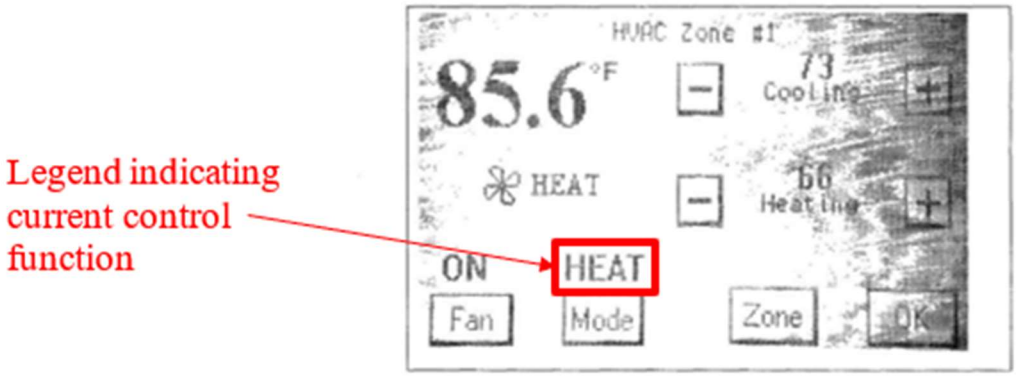

EX1007, Figs. 84-85 (annotated).

To the extent that Patent Owner is right that the legend must be on the virtual button, then *Geiwitz/Bier* discloses or renders obvious limitation 1[m] for the same reasons discussed in §IX.A.2.i. *Supra*, §IX.A.2.i-j. EX1002, ¶216.

3. Claim 3:

Geiwitz or *Geiwitz* in view of *Rosen,* and *Bier* discloses Claim 3. EX1002, ¶¶217-18. As discussed above, *Geiwitz* or *Geiwitz* in combination with *Rosen* and *Bier*, renders Claim 1 obvious. *Supra*, §IX.A.2. *Geiwitz*'s system provides "control of … heating, ventilation and air conditioning (HVAC)" equipment. EX1005 3:26-27. This discloses all Claim 3 options to a POSITA. EX1002, ¶217. *Geiwitz* explicitly discloses control of "air conditioning," as well as Central Heating, Central Cooling, Evaporative Cooling, Heat Pumps, Baseboard Heat, and Radiant Heat. EX1005, 25:6; EX1007, 176. *Geiwitz* discloses, or at least makes obvious, all the options for equipment in Claim 3. EX1002, ¶217. If Patent Owner disagrees, then this element is disclosed by *Rosen* and/or constitutes general knowledge of a POSITA. EX1008, 321:19-322:16; EX1001, 1:35-2:9; EX1009, ¶¶2-3; EX1002, ¶218.

4. Claim 4:

Geiwitz, or *Geiwitz* in view of *Rosen,* and *Bier*, discloses or renders obvious Claim 4. EX1002, ¶¶219-23. As discussed above, the prior art combination

renders Claim 3 obvious. *Supra*, §IX.A.3. *Geiwitz* teaches controlling auxiliary heat equipment, as shown below, which depicts "AUX HEAT" equipment as one of the HVAC devices in the HVAC zones and controlled by *Geiwitz*'s system via relays. EX1005, Fig. 4b; *Supra*, §IX.A.2.g.

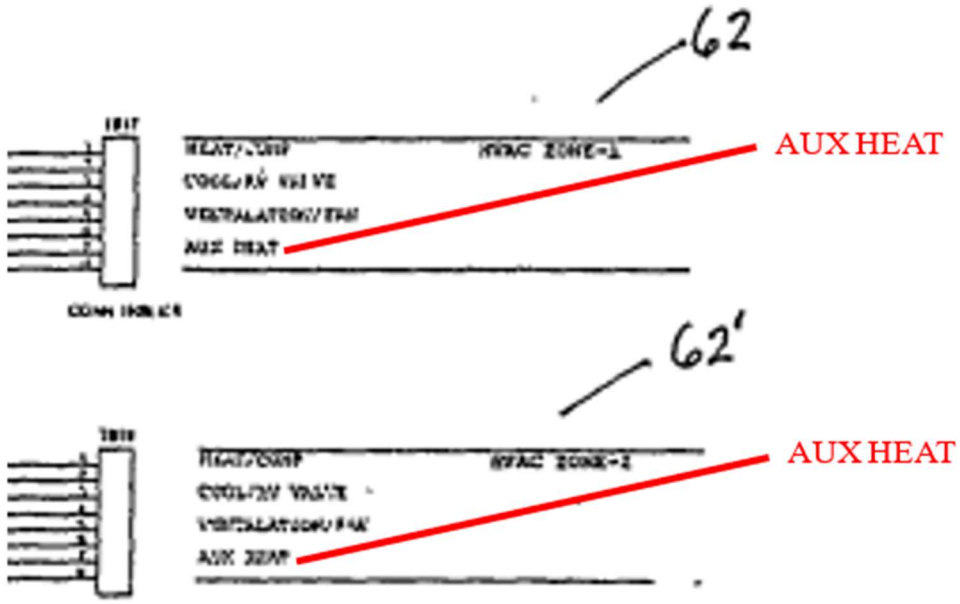

EX1005, Fig. 4b (partially reproduced; annotated). A POSITA would have understood such AUX HEAT equipment is conventionally used in a thermostat's AUX HEAT/Emergency Heat mode when a heat pump cannot produce enough heat. EX1002, ¶220; EX1007, 176. The *Provisional* discloses "Heat Pumps." EX1007, 176; *Supra*, §IX.A.3.

It would have been obvious to a POSITA to modify *Geiwitz*'s 'Mode' icon to add an AUX HEAT operation mode for controlling Auxiliary Heat equipment, such that pressing the 'Mode' icon repeatedly would direct the system to activate three

pieces of space conditioning equipment: cooling equipment for COOL mode, heating equipment for HEAT mode, and Auxiliary Heat equipment for AUX HEAT mode. EX1002, ¶221. A POSITA would have understood Auxiliary Heat equipment to be space conditioning equipment. *Id*. It was well-known in the art to include an AUX HEAT mode in a thermostat for particularly cold weather. *Id*.

Furthermore, it would have been obvious to a POSITA to modify the system of *Geiwitz* to display a legend indicative of an AUX HEAT mode. *Id.*, ¶222. As described previously, *Geiwitz* displays similar legends to indicate that the other modes of operation are activated. *Supra*, §IX.A.2.i. If the mode icon were so modified, the thermostat would function with respect to the "third legend" just as it did for the "second legend" (*Supra*, §IX.A.2.l), making Claim 4 obvious. EX1002, ¶222. It would have been obvious that the legend could be directly on the button. *Id.*; *Supra* §IX.A.2.i. It was common knowledge that thermostats could have an emergency heat option. EX1002, ¶222; *see* EX1019, Table 2 (referencing a System Switch having modes: Auto, Cool, Heat, Emergency Heat, Off).

5. Claim 5:

Geiwitz or *Geiwitz* in view of *Rosen* and *Bier,* discloses Claim 5. EX1002, ¶¶224-26. As discussed above, Claim 4 is obvious. *Supra*, §IX.A.4. *Geiwitz* discloses a thermostat system that provides control of heating equipment and gives examples. EX1005 3:26-27; EX1007, 176. A POSITA would have understood

Geiwitz controls a heater in heating mode. EX1002, ¶224. It was well-known that providing central heat, baseboard heat, and radiant heat discloses three types of heaters. *Id*.

A "heat" graphic is associated with the mode button when the heater is controlled, disclosing all limitations of Claim 5. *Id.*, ¶225; EX1007, 58.

Figure 85

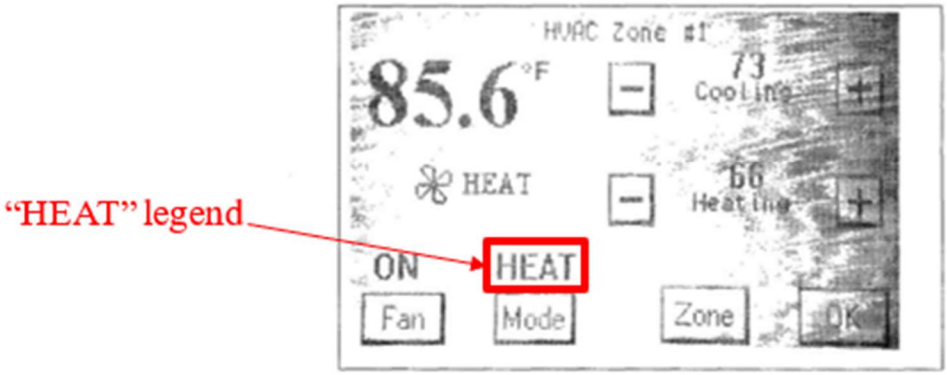

EX1007, Fig. 85 (annotated). It would have been obvious the graphic could be directly on the button. *Supra* §IX.A.2.i; EX1002, ¶226.

6. Claim 7:

Geiwitz or *Geiwitz* in view of *Rosen,* and *Bier,* discloses Claim 7. EX1002, ¶¶227-29. As discussed above, Claim 4 is obvious. *Supra*, §IX.A.4. *Geiwitz* discloses control of "air conditioning" equipment which encompasses an "air condition system." EX1005, 3:26-27; EX1007, 176; EX1002, ¶227. *Geiwitz* further describes displaying a "COOL" graphic to indicate "the system is running the air conditioning to cool the controlled zone." EX1005, 25:6.

A "cool" graphic is associated with the mode icon when the air conditioning system is controlled, disclosing all limitations of Claim 7. EX1002, ¶228; EX1005, 25:5-6.

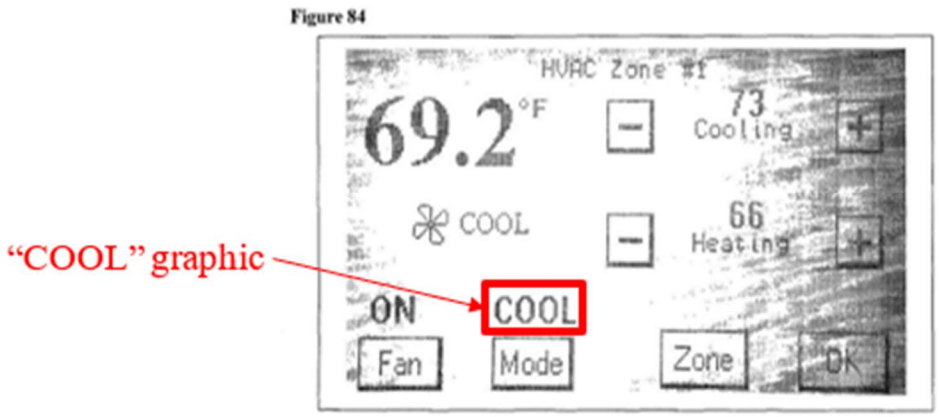

EX1007, Fig. 84 (annotated). It would have been obvious that the graphic could be directly on the button. EX1002, ¶229; *Supra*, §IX.A.2.i.

7. Claim 9:

Geiwitz or *Geiwitz* in view of *Rosen,* and *Bier,* discloses Claim 9. EX1002, ¶¶230-232. As discussed above, Claim 4 is obvious. *Supra*, §IX.A.4. *Geiwitz* lists various HVAC devices controlled including "Heat Pumps" EX1007, 176, Figure 4b (disclosing "RV Valve"—a reversing valve for a heat pump); EX1002, ¶230.

A "heat" graphic is associated with the mode icon when the heater is controlled. EX1002, ¶231; EX1007, 58.

Figure 85

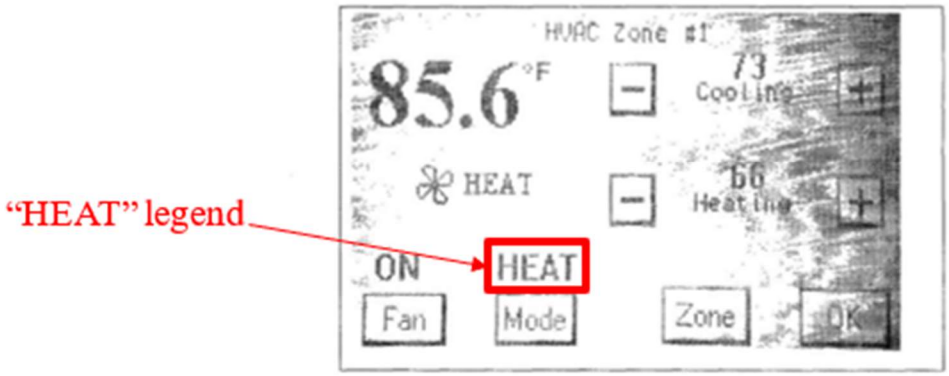

EX1007, Fig. 85 (annotated). A POSITA would have understood, or at least it was obvious, that this would occur whether the heater is a regular heater or a heat pump operating in heating mode. EX1002, ¶232. It would have been obvious that the graphic could be directly on the button. *Id.*; *Supra*, §IX.A.2.i.

8. Claim 11:

Geiwitz or *Geiwitz* in view of *Rosen* and *Bier* discloses Claim 11. EX1002, ¶¶233-35. As discussed above, the combination renders Claim 4 obvious. *Supra*, §IX.A.4. *Geiwitz* discloses that a space conditioning component can be a heat pump. *Supra*, §IX.A.7.

A "COOL" graphic is associated with the mode button when the air conditioning system is controlled. EX1002, ¶234; EX1005, 25:5-6.

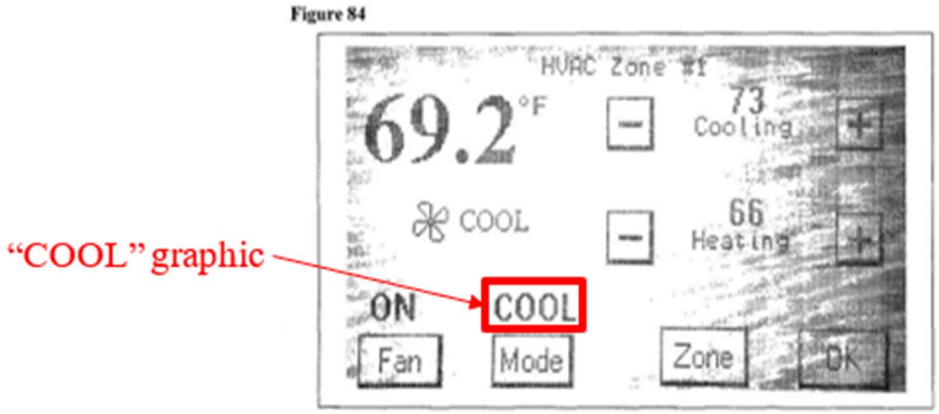

EX1007, Fig. 84 (annotated). A POSITA would have understood, or at least it was obvious, that this would occur whether the air conditioning system is a regular air conditioning system or a heat pump operating in cooling mode. EX1002, ¶235. It would have been obvious the graphic could be directly on the button. *Supra*, §IX.A.2.i; EX1002, ¶¶235, 203-207.

9. Claim 14:

Geiwitz or *Geiwitz* in view of *Rosen,* and *Bier* discloses Claim 14. EX1002, ¶¶236-37. As discussed above, the combination renders Claim 1 obvious. *Supra*, §IX.A.2. *Geiwitz* illustrates the display of different buttons in the same physical location, on different screens as shown in *Geiwitz*'s "Lights," "Outlets," and "HVAC" control screens. EX1007, 54-55, 57.

Figure 75

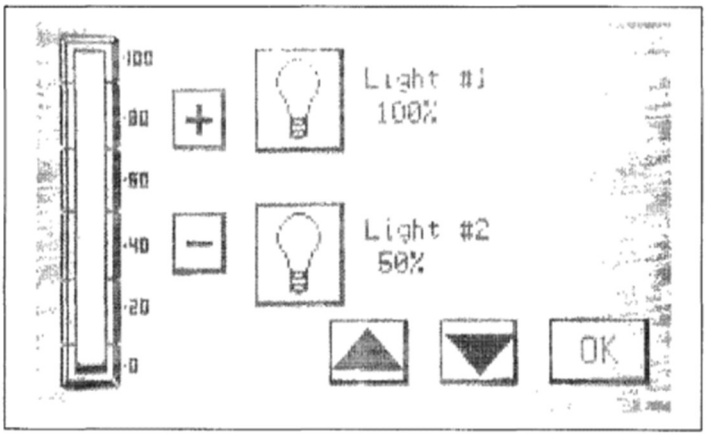

Figure 76

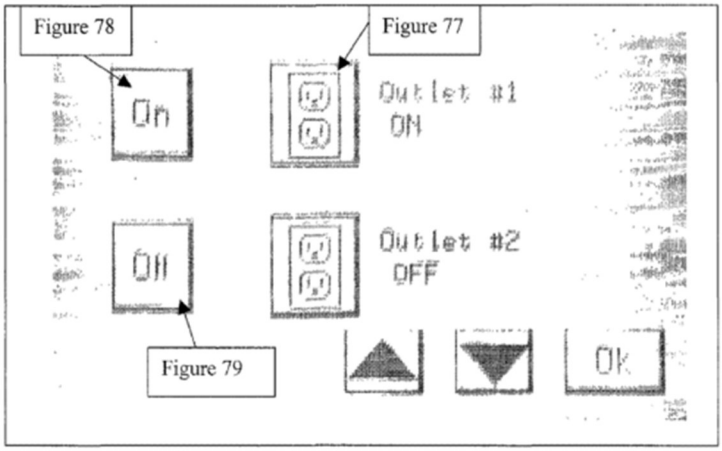

Figure 84

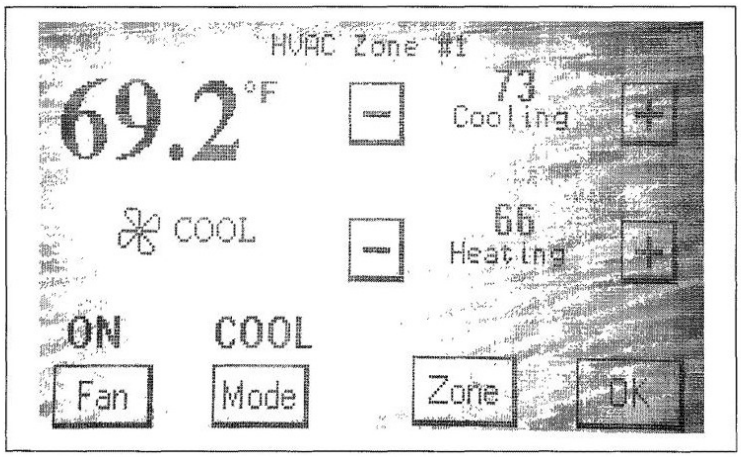

Id., Figs. 75-76, 84. A POSITA would have understood this capability requires a dot matrix LCD. EX1002, ¶237. Mr. Rosen admitted having different screen content in the same physical location on different screens demonstrates that a dot matrix LCD was used. EX1008, 212:3-16, 217:7-19.

B. Ground 2: Claims 1, 3-5, 7, 9, 11, and 14 are obvious over *Dushane* in view of *Cardio Manual,* and *Bier*.

This ground is included in case Patent Owner later attempts to swears behind *Geiwitz*.

1. A POSITA Would Have and Could Have Combined *Dushane* with *Cardio Manual*

It would have been obvious to a POSITA to combine the thermostat system of *Dushane* with the touchscreen and virtual buttons of *Cardio Manual*. EX1002, ¶¶238-50. Modifying *Dushane* to incorporate the touchscreen and virtual buttons of *Cardio Manual* would merely involve the replacement of known elements (*Dushane*'s LCD and physical buttons) with other known elements (*Cardio Manual*'s touchscreen, and virtual buttons), to obtain predictable results (a thermostat system with a touchscreen, input/output circuitry, and virtual buttons). *Id.*, ¶¶238, 64-68.

Dushane discloses an LCD with "a mode indication display field 110" with "'HEAT', 'OFF', 'COOL' and 'AUTO' sub-fields" that a POSITA would have understood teaches a series of legends. EX1004, 11:20-22; EX1002, ¶239. A

POSITA would have understood *Dushane*'s legends to indicate the current control function of the thermostat. EX1002, ¶239.

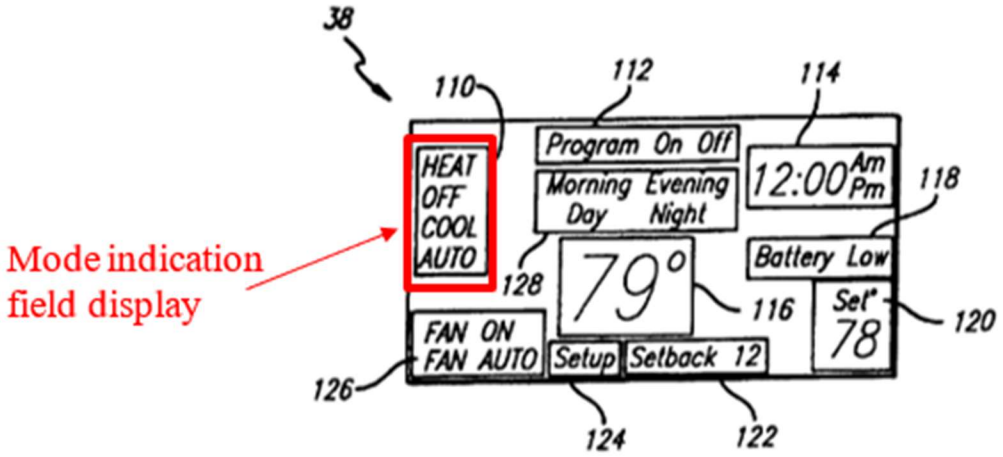

EX1004, Fig. 4 (annotated). For example, control signals control "a cooling apparatus such as an air conditioner" during COOL mode. *Id.*, 12:57-59; EX1002, ¶240.

Dushane discloses that the appropriate legend is displayed when the corresponding "operating mode for the controlled apparatuses is selected." EX1004, 11:23-24; EX1002, ¶241.

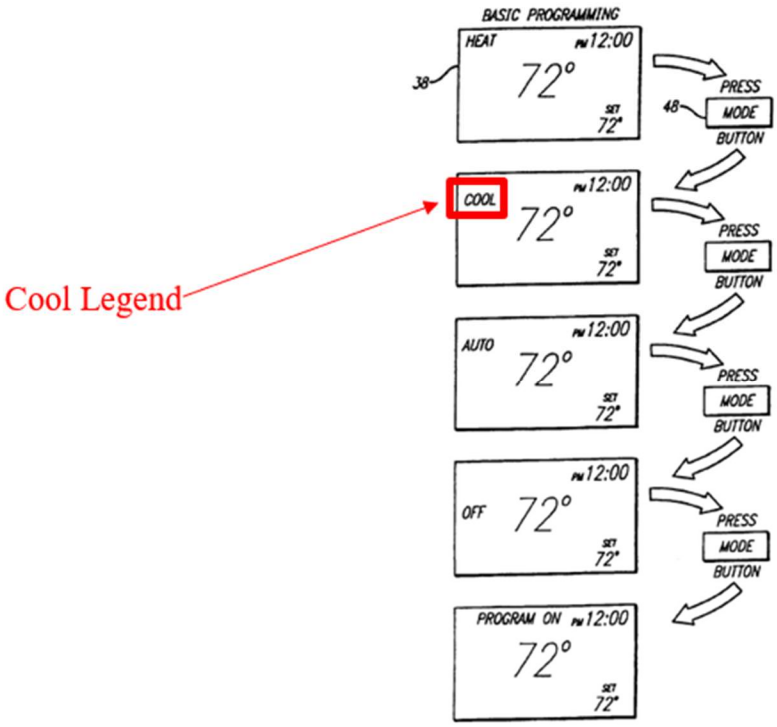

EX1004, Fig. 6 (annotated).

Like the '318 Patent, each mode button press causes the *Dushane* thermostat to cycle to the next mode. *Id.*; EX1002, ¶242. However, *Dushane* uses a physical mode button, rather than a virtual mode button on a touchscreen. EX1004, 12:66-67; EX1002, ¶242. It would have been obvious to substitute *Cardio Manual's* touchscreen and virtual mode button for *Dushane*'s keypad and LCD to control the thermostat's mode. EX1002, ¶242.

Cardio Manual discloses a touchscreen used to control the thermostat's mode with a virtual "mode button" that has a legend indicating whether the thermostat is in heating mode or cooling mode. EX1012, 7; EX1002, ¶243.

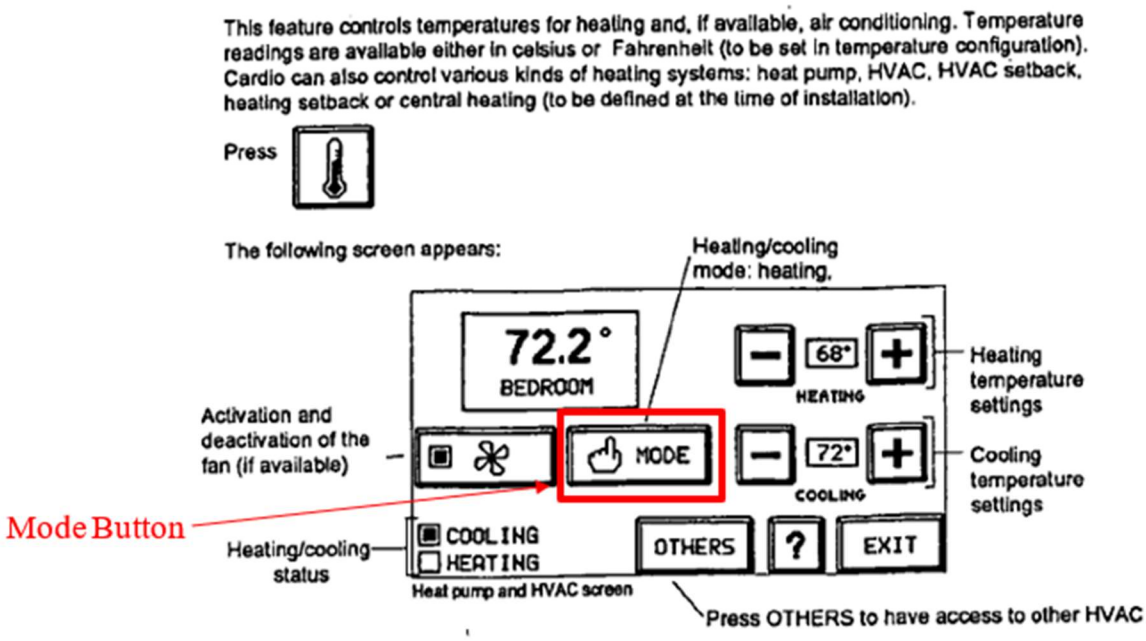

EX1012, 7 (annotated). *Dushane* and *Cardio Manual* are analogous art. EX1002, ¶244. Both *Dushane* and *Cardio Manual* relate to programmable thermostats. EX1004, 1:8-10; EX1012, 7, 12, 23, 41-45. Based on *Cardio Manual*, a POSITA would have been motivated to modify *Dushane* to incorporate *Cardio Manual*'s touchscreen and virtual buttons to improve *Dushane*'s user interface and functionality. EX1002, ¶244; 64-68.

Dushane teaches that in thermostat design, a "principle consideration is that the thermostat project from the mount on the wall into the space as little as possible." EX1004, 1:28-30; EX1002, ¶245. *Cardio Manual*'s system includes a design that minimizes the space the thermostat system projects because the touchscreen eliminates the need for a separate keypad for entering data. EX1002, ¶245.

Cardio Manual discloses having a touchscreen that makes the system "user friendly." EX1012, 2; EX1002, ¶247. Making a thermostat more user friendly is a second reason a POSITA would use the touchscreen of *Cardio Manual.* EX1002, ¶247.

Third, it was known to use either a touchscreen or a combination of an LCD and physical buttons as a thermostat user interface. *Id.*, ¶248. Using one or the other would have been a simple matter of design choice. *Id.* For a person to control a thermostat, they need a way to tell the thermostat what mode they want the thermostat to be in (e.g., heating or cooling) and they need a way to know the thermostat is in that mode. *Id.* That was within the general knowledge of a POSITA. *Id.* Once one made a design choice to use a touchscreen instead of physical buttons to provide user input, it was obvious to substitute *Cardio Manual*'s virtual buttons with legends for *Dushane*'s physical buttons with legends on the LCD. *Id.*

Fourth, using a touchscreen in a thermostat with virtual buttons was common knowledge of a POSITA as admitted by the '318 Patent. EX1001, 2:6-9; EX1002, ¶¶69-73. Using a prior art user interface was obvious to a POSITA. EX1002, ¶249.

A POSITA would have had a reasonable expectation of success in making the combination of *Dushane*'s system and *Cardio Manual*'s touchscreen, input/output circuitry, and virtual buttons. *Id.*, ¶250. A POSITA would have recognized the strong similarities between the systems of *Dushane* and *Cardio Manual*. *Id.* A POSITA would have understood that *Cardio Manual*'s touchscreen and virtual buttons could be readily incorporated into *Dushane*'s thermostat system to replace *Dushane*'s push buttons and non-touchscreen LCD. *Id.* It would have been well-within the abilities of a POSITA to modify *Dushane*'s thermostat system to include *Cardio Manual*'s touchscreen. *Id.* After all, the '318 Patent teaches the invention can be implemented with off-the-shelf components. EX1001, 6:34-42. Mr. Rosen agreed off-the-shelf components can be used and those components are being used for their intended purpose. EX1008, 150:11-151:21. With only needing to use off-the-shelf components, a POSITA would have had a reasonable expectation of success. EX1002, ¶250.

2. Claim 1

Each of the seven elements 1[Pre]-1[f] are disclosed by *Dushan*e alone or in view of *Cardio Manual*, as discussed below. To the extent Patent Owner disagrees, each of these elements is common knowledge of a POSITA as admitted by the '318 Patent. EX1001, 1:35-2:9, 6:11-34, EX1002, ¶¶129-138, 251. Petitioner may rely upon Patent Owner's admissions to "supply a missing claim element."

Qualcomm Inc., 24 F.4th at 1376. This paragraph provides an alternative basis for obviousness with respect to each of elements 1[pre]-1[f] below.

a. **1[Pre]:**

If the preamble is limiting, *Dushane* discloses it. EX1002, ¶¶252-53. *Dushane* describes "a programmable digital thermostat includ[ing] a user input mechanism adapted to receive programming inputs from users," and a controller adapted to be programmable in response to input signals. EX1004, 4:37-44.

Dushane's thermostat provides "control signals to one or more environmental control apparatuses," such as heaters and air conditioners, and thus is directed to controlling space conditioning equipment. *Id.*, 4:42-44; *see id.*, 8:17-20, 12:52-63; EX1002, ¶253. Figures 5-10 of *Dushane* and their description illustrate software that is used to program *Dushane*'s microprocessor for control. EX1004, Figs. 5-10, 12:23-14:12; EX1002, ¶253.

b. **1[a]:**

Dushane discloses element 1[a]. EX1002, ¶¶254-57. *Dushane's* thermostat system includes a "temperature sensor 56." EX1004, 11:55; EX1002, ¶254. The thermostat displays "the current temperature as measured by the temperature sensor 56." EX1004, 11:53-55; EX1002, ¶254. In one embodiment, the thermostat includes "a small backside cavity in which a temperature sensing component P4" is located, as seen in Fig. 12. EX1004, 5:7-9; EX1002, ¶ 254.

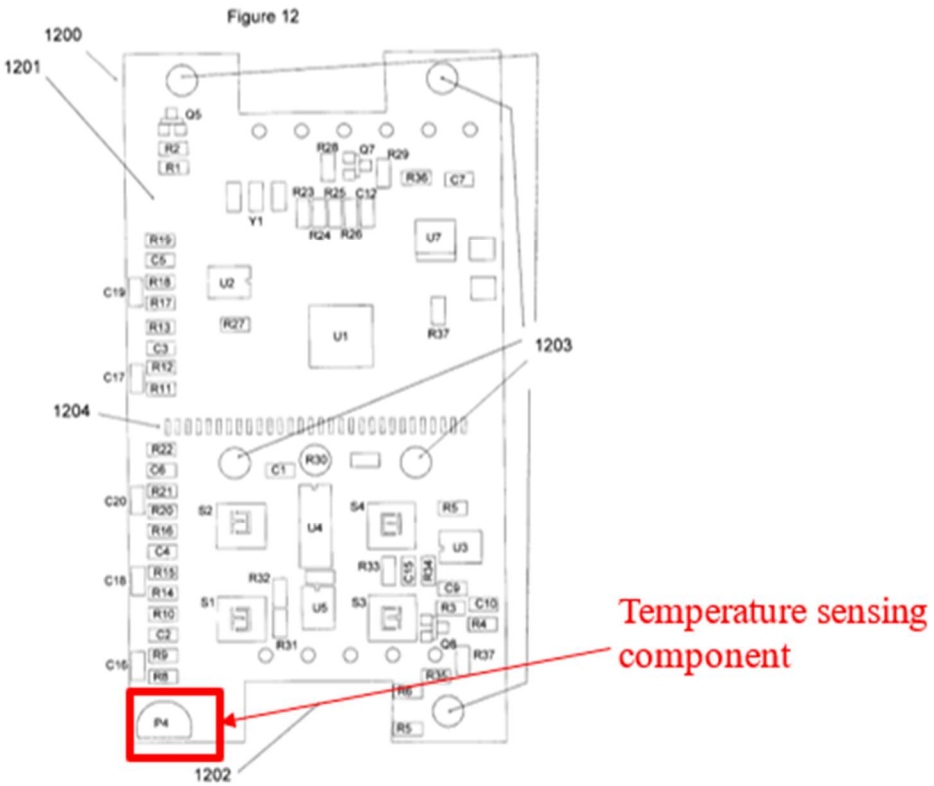

EX1004, Fig. 12 (annotated); *see id.,* Figs. 1I-1L.

Dushane's "temperature sensor" is an "environmental condition sensor," as confirmed by the '318 Patent, which similarly describes a "temperature sensor 5 send[ing] an electrical signal… representative of the temperature within the conditioned space." EX1001, 6:11-15; EX1002, ¶255. *Dushane*'s Figure 3 shows microprocessor 54 "electrically connected to the temperature sensor 56 via a transistor." EX1004, 9:44-46; EX1002, ¶255.

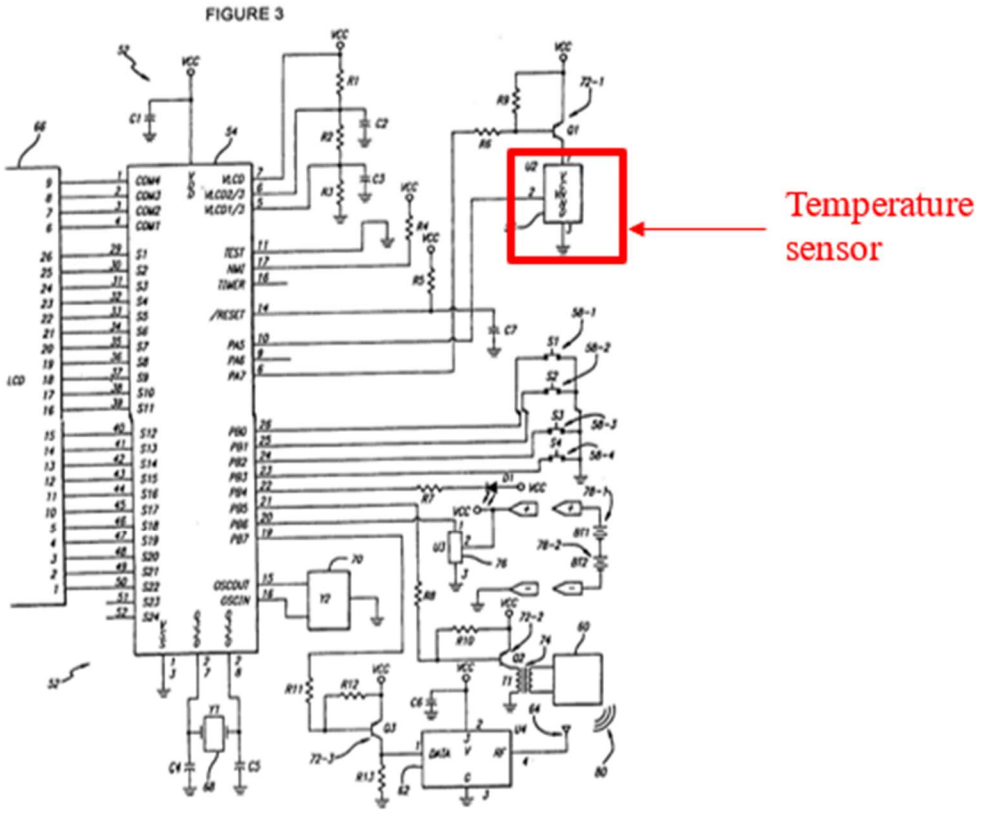

EX1004, Fig. 3 (annotated). *Dushane's* temperature sensor provides an electrical signal indicative of the ambient temperature of the conditioned space in which the sensor is situated. EX1002, ¶255. It was common knowledge of a POSITA that temperature sensors, like *Dushane*'s sensor, function by providing an electrical signal indicative of the ambient temperature of a conditioned space in which the temperature sensor is situated. *Id.*, ¶256; EX1001, 6:11-34.

c. **1[b]:**

Dushane, in view of *Cardio Manual*, discloses element 1[b]. EX1002, ¶¶258-65. *Dushane's* thermostat includes "a liquid crystal display (LCD) 66 which is electrically connected to the microprocessor 54," but not a touchscreen.

EX1004, 9:38-39, *see id.*, 7:54-8:11, Figs. 1a, 2; EX1002, ¶¶258-59.

Cardio Manual discloses element 1[b]. EX1002, ¶¶259-65. Like *Dushane*, *Cardio Manual* provides a mode button to change modes of the thermostat. EX1012, 7.

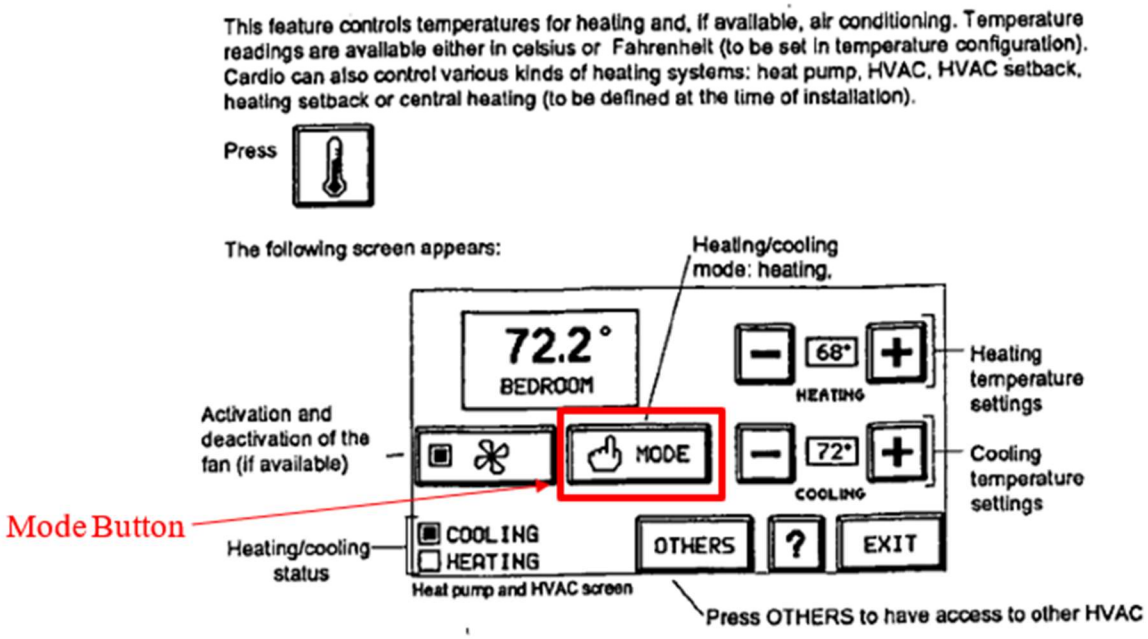

Id. (annotated). According to *Cardio Manual*, the system can be controlled by its touchscreen. *Id.,* 2. Mr. Rosen represented the *Cardio Manual* "describes a programmable thermostat with a touch screen interface whose pictorial includes representations of virtual buttons." EX1014, 5. Mr. Rosen represented that said touchscreen is an LCD. *Id.* Given that the display is visible and *Cardio Manual* discloses a touchscreen, a POSITA would have understood *Cardio Manual* to disclose a transparent touch pad as part of the touchscreen. EX1002, ¶261. If the touch pad portion of the touchscreen were not transparent, then the screen shown on

Page 7 would not be discernible. *Id.* A POSITA would have understood the touch-sensitive component (i.e., touch pad) to be juxtaposed with the LCD so the touch pad could register user touches on the LCD screen—especially touches in the location of a virtual button. *Id.* These were conventional features of touchscreens that were well-known in the art before the priority date of the '318 Patent. *Id.* The inventor of the '318 Patent, Mr. Rosen, admitted he did not invent a touchscreen juxtaposed with a liquid crystal display, and before the invention of the '318 patent, such touchscreens were commercially available. EX1008, 158:17-23.

While the *Cardio Manual* does not explicitly state that the screen is an LCD, a POSITA would have understood the screen is an LCD screen in the absence of language to the contrary because this is by far the most common type of touchscreen. EX1002, ¶262.

The common knowledge of a POSITA includes the fact that touchscreens with LCD displays were used in prior art thermostats. *Id.*, ¶263; EX1001, 2:6-9; EX1013, Fig. 6, ¶66, Claim 31; EX1015, 3:18-4:6. To the extent that *Cardio Manual* does not explicitly disclose an LCD display, it would have been obvious to use one because they had been used in thermostats before and are the most common type of display to use in a touchscreen. EX1002, ¶263. LCDs were often used because they consume less power and can be made more compact than many other

types of displays available in 2003. *Id.* Choosing an LCD for a touchscreen is a simple matter of design choice. *Id.*

Thus, a POSITA would have understood *Cardio Manual* as disclosing, or at least rendering obvious, the claimed "transparent touch pad juxtaposed with a liquid crystal display to constitute a touchscreen for interactive interface with the user." *Id.*, ¶264.

d. **1[c]:**

Dushane and/or *Dushane* in view of *Cardio Manual* discloses element 1[c]. *Id.*, ¶¶266-69. *Dushane's* thermostat system includes a microprocessor U1 that is "electrically connected to the temperature sensor U2." EX1004, 8:12-13. *Dushane* describes control functions of the microprocessor and illustrates its connection to other components. EX1004, 8:21-25, Fig. 2; EX1002, ¶266.

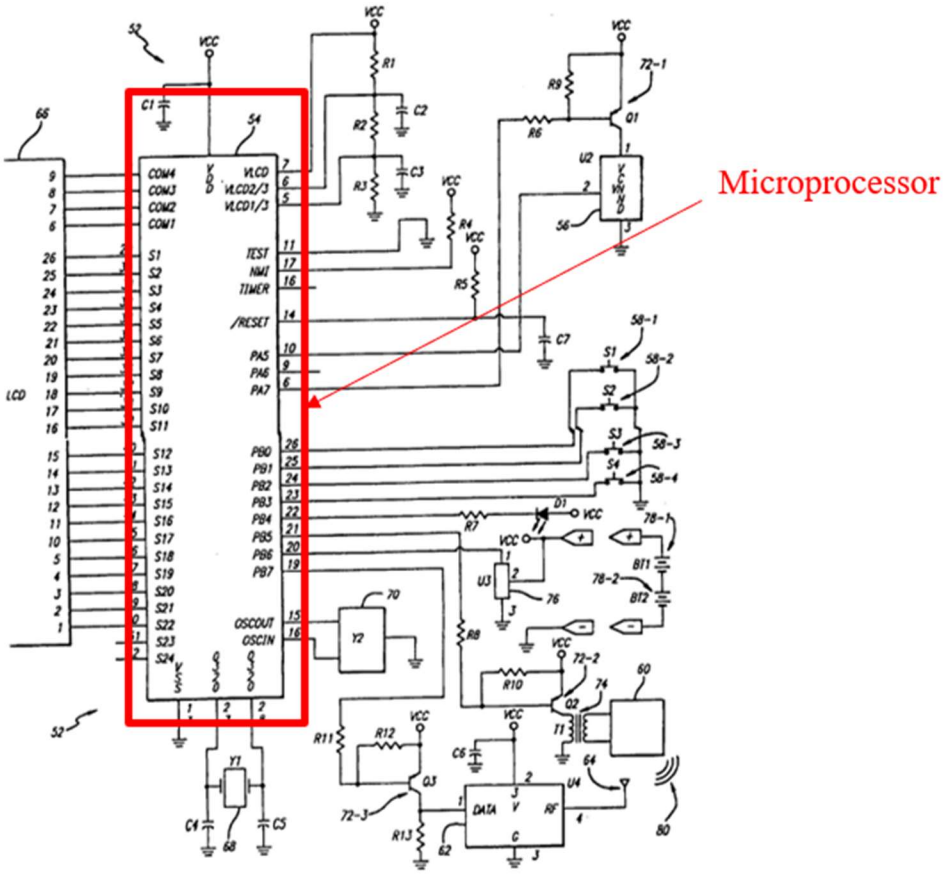

EX1004, Fig. 3 (annotated) (showing microprocessor 54 electrically connected to temperature sensor 56, LCD 66, and other components). *Dushane*'s microprocessor controls the operation of the thermostat system by generating and controlling "the transmission of input signals which are received by the receiver/controller unit 22 which processes the input signals to generate control signals which are… provided to" space conditioning equipment. *Id.,* 12:53-56; EX1002, ¶267.

A POSITA would have understood that *Dushane's* microprocessor discloses, or renders obvious, the claimed processor having a central processing unit (CPU).

EX1002, ¶268. A POSITA would have understood that a microprocessor is essentially a single-chip implementation of a CPU and is part of the processor in combination with the additional elements discussed below. *Id.*; *see* EX1005, 10:21-23, Fig. 21 (showing Intel®386ex chip). Mr. Rosen agrees that "of course" a CPU could be a microprocessor. EX1008, 92:24-93:5.

e. **1[d]:**

Dushane and/or *Dushane* in view of *Cardio Manual* discloses element 1[d]. EX1002, ¶¶270-72. *Dushane's* thermostat system includes a "clock display field 114 [that] preferably shows the current time." EX1004, 11:50-51. *Dushane* teaches a user "adjust[ing] the time which is shown in the clock." *Id.,* 14:10-12. A POSITA would have understood *Dushane* to have a real time clock based upon this disclosure or at least that it was obvious to use one to keep the time. EX1002, ¶270.

If *Dushane* did not disclose a real time clock, it would have been obvious to use one based upon a POSITA's general knowledge. *Id.*, ¶271. It was well-known that prior art thermostats use real time clocks. *Id.* An October 1995 patent states "[i]t is to be appreciated that real time clocks are well known in the art and the above reference to a particular product from a particular company is by way of example only." EX1016, 3:19-22. It was obvious to use a real time clock in a thermostat because many thermostats, including the *Cardio Manual* (EX1012, 15-

16) and *Dushane* (EX1004, 11:56-12:2), allow programming said thermostat to change the temperature at different times of the day and it is useful and/or necessary to use a real time clock to determine the time of day to apply the programming of the thermostat. EX1002, ¶271. Use of a real-time clock was further obvious because it was available off-the-shelf. EX1001, 6:35-42.

f. **1[e]:**

Dushane or *Dushane* in view of *Cardio Manual*, discloses element 1[e]. EX1002, ¶273-75. *Dushane's* thermostat system has a memory. EX1004, 9:29, 15:57-60. Data is stored in memory: "As an example, the above steps of setting time and temperature related data for the Basic mode have been completed and exist in the memory of the programming device although not in a controller device." *Id.,* 15:57-60. *Dushane* also describes input signals being "transmitted and/or stored in the memory of the programming device." *Id.*, 9:29-30. A POSITA would have understood input signals stored in memory to be "data information." EX1002, ¶273.

Dushane discloses storage of program information in memory. EX1004, 12:6-17; EX1002, ¶274. *Dushane* refers to a program executed by the microprocessor and indicates the program is "stored within or accessible to the microprocessor." EX1004*,* 12:14-15; EX1002, ¶274. A POSITA would have understood storage of a program for a microprocessor requires memory to store the

program. EX1002, ¶274. It was well-known that *Dushane's* microprocessor requires memory to store a program executed by the microprocessor, and that memory must necessarily be coupled to the CPU (the microprocessor) or the microprocessor could not execute the program. *Id.*

g. **1[f]:**

Dushane in view of *Cardio Manual* discloses or at least renders obvious element 1[f]. *Id.*, ¶¶276-81. *Dushane* discloses having a temperature sensor electrically connected to the microprocessor. EX1004, 9:44-47; *Supra*, §IX.B.2.c. Thus, circuitry within the microprocessor constitutes a "sensor input coupled to each said environmental condition sensors for receiving said electrical signal therefrom." EX1002, ¶276. *Dushane* discloses a control output coupled to the space conditioning equipment for issuing control signals thereto. *Id.* *Dushane* makes clear the microprocessor generates "control signals" that control apparatuses including an electric heater, a fan, and a heat pump. EX1004, 10:41-58, 12:50-65, 13:22-27. Thus, circuitry within the microprocessor constitutes a control output. EX1002, ¶276. *Dushane* includes an LCD display "electrically connected to the microprocessor." EX1004, 8:5. Push button inputs are also provided to the microprocessor. *Id.*, 7:54-8:11. A POSITA would have understood that the microprocessor receives input from the push buttons and provides output to control the LCD display. EX1002, ¶276.

Dushane's microprocessor has circuitry that serves as an input/output unit receiving input from the temperature sensor, and user interface buttons and providing output to control space conditioning equipment and the LCD screen. *Id.*, ¶277. As discussed above, *Dushane* does not provide a touchscreen. *Supra*, §IX.B.2.c. Given that *Dushane*'s microprocessor interacts with both the LCD and buttons of the user interface, it would have been obvious that when *Cardio Manual*'s touchscreen is substituted for *Dushane*'s LCD and push buttons, the microprocessor would carry out information transfer between the microprocessor and the touchscreen. EX1002, ¶277.

It was well-known that a microprocessor can be programmed to control a touchscreen and that this is the most typical method of controlling a touchscreen. EX1002, ¶278. A POSITA would have a reasonable expectation of success in doing so since the touchscreen of *Cardio Manual* was disclosed as early as 1995 according to Rosen. *Id.*, EX1014, 8-10. The input/output unit and touchscreen are off-the-shelf components being used as they were intended to be used. EX1002, ¶278; EX1008, 150:11-151:21; EX1009, ¶0023; EX1001, 6:34-42.

To the extent the claim requires an input/output unit separate from the CPU, this would have been obvious to a POSITA. EX1002, ¶279. It would have been obvious to a POSITA that various functions in a microprocessor system can be combined onto a single chip (or unit) or separated into multiple chips or units.

EX1008, 100:9-102:5. Deciding which chip is to perform which function is a simple matter of design choice. EX1002, ¶279.

The construction of element 1(f), if not indefinite, would include the '318 Patent's preferred embodiment. As such, an input/output unit internal to a processor and providing the interface for communication between processor components and the touchscreen would qualify as a processor including "an input/output unit coupled between said processor and said touchscreen" to the extent that limitation is definite. *Id.*, ¶280. *Dushane* has an input/output unit that is internal to the processor, providing an input/output interface for communication between the processor and the touchscreen. *Id.*

h. **1[g]:**

Dushane, in view of *Cardio Manual,* discloses or at least renders obvious element 1[g]. *Id.*, ¶¶282-283. *Dushane's* thermostat includes a programming device with "all the desired parameters necessary to control all functions of the controller device" stored in the memory of said programming device. EX1004, 15:55-60. *Dushane* discloses having a central processing unit in the form of a microprocessor. *Supra*, §IX.B.2.d. *Dushane*'s programming modes "may be implemented within a single computer executable program stored within or accessible to the microprocessor." EX1004, 12:13-15. As discussed above, a POSITA would have understood the program to be stored in memory. EX1002,

¶282; *Supra*, §IX.B.2.f. *Dushane*'s thermostat operates via a "control program stored in said memory." As discussed above, *Dushane* has a control program that communicates through an input/output unit to control the display and buttons of *Dushane.* *Supra*, §IX.B.2.g. A POSITA substituting *Cardio Manual*'s touchscreen for *Dushane*'s manual buttons/LCD interface would turn to a control program to cause the CPU to communicate through the input/output unit to selectively control the touchscreen and remainder of the thermostat as claimed. EX1002, ¶282. Such a program would be desirable to implement the touchscreen functionality of *Cardio Manual*. *Id.* A POSITA would have had a reasonable expectation of success in doing so as *Cardio Manual* demonstrates such control was feasible in the 1990s. *Id.*

i. **1[h]:**

Dushane, in view of *Cardio Manual,* discloses element 1[h]. *Id.*, ¶¶284-88. As discussed above, in the combined system, *Dushane's* thermostat system incorporates the touchscreen of *Cardio Manual* to provide an interactive interface with a user. *Supra*, §IX.B.2.c.

Cardio Manual describes pressing a mode button to switch between heating and cooling:

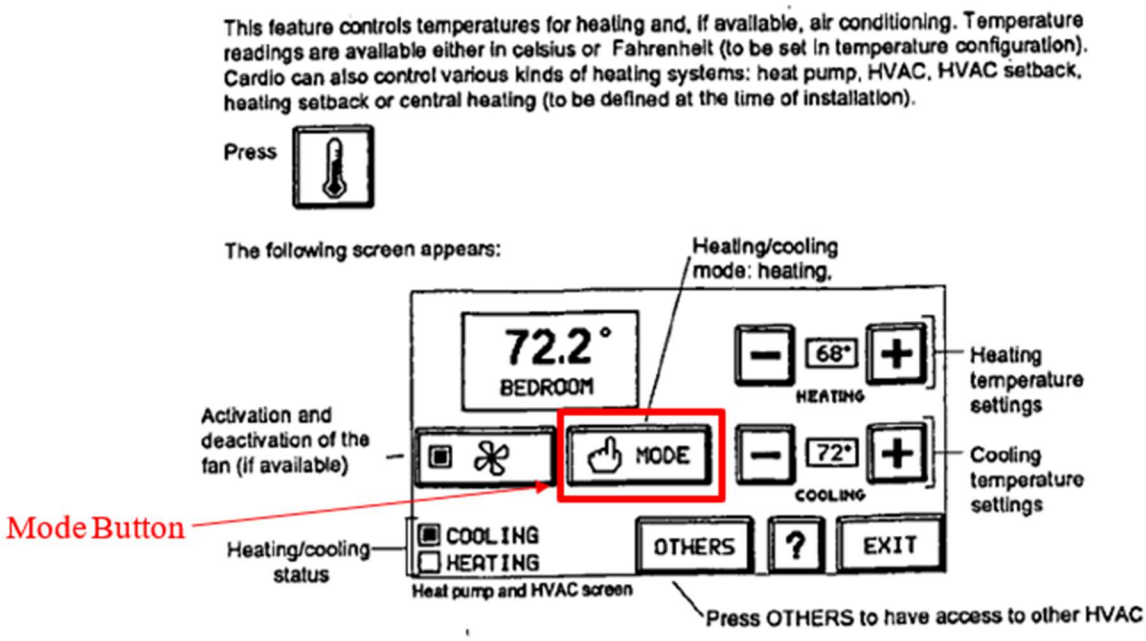

EX1012, 7 (annotated).

A POSITA would have understood *Cardio Manual's* mode button as disclosing or at least rendering obvious the claimed "representation of a first virtual button" on the LCD. EX1002, ¶286. In the Disclaimer, Mr. Rosen refers to the same screen shot above and represents that when a user presses the button representations, a control program receives input that a specific button has been pressed. EX1014, 5. A POSITA would have understood the 'Mode' button to be a virtual button at a predetermined position, given this icon appears on a touchscreen at a fixed position. EX1002, ¶286. A POSITA would have understood that *Cardio Manual's* control program established the representation of the virtual buttons and legends on the screen. *Id.*, ¶287.

j. **1[i]:**

Dushane, in view of *Cardio Manual* and, alternatively, in view of *Bier* discloses element 1[i]. *Id.*, ¶¶289-300. *Dushane* describes "a mode indication display field 110 which includes "HEAT", "OFF", "COOL" and "AUTO" sub-fields." EX1004, 11:20-22. A POSITA would have understood *Dushane*'s "mode indication field display" as disclosing multiple legends indicative of control functions of said thermostat that were active when the respective legend was viewable. EX1002, ¶289. A POSITA would have understood one of *Dushane*'s sub-fields, such as HEAT, to be a legend indicative of an active first control function of said thermostat because the subfield HEAT is indicative of the first control function of the thermostat, HEAT mode and that function is active. *Id.*

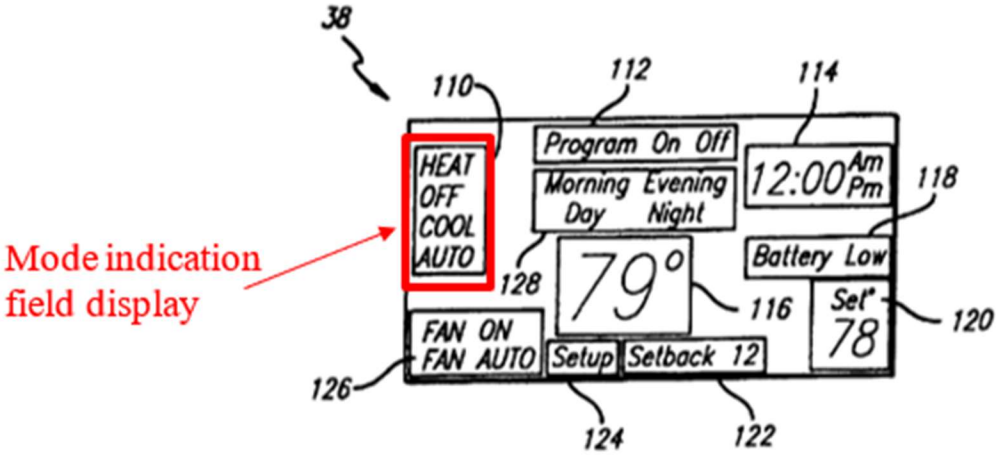

EX1004, Fig. 4 (annotated). The same reasoning applies to the display of "COOL" during COOL mode. EX1002, ¶289. *Dushane* teaches these different modes as controlling environmental control apparatuses. EX1004, 12:50-59. For example,

Dushane teaches to provide control signals to a "heating apparatus such as a furnace" during HEAT mode and to provide control signals to "a cooling apparatus such as an air conditioner" during COOL mode. *Id.* This discloses to a POSITA that the legend is visible when the control function is active. EX1002, ¶290.

Dushane teaches selectively establishing a first legend. EX1002, ¶291. *Dushane* discloses one of the sub-fields being activated when the corresponding "operating mode for the controlled apparatuses is selected." EX1004, 11:23-24; EX1002, ¶291. For example, *Dushane* describes providing a user "with a visible indication that a heating operation has been selected" "when the sub-field 'HEAT' is activated." EX1004, 11:24-26; EX1002, ¶291. "When the sub-field 'COOL' is activated, the user is provided with a visible indication that a cooling operation has been selected." EX1004, 11:27-29; EX1002, ¶291.

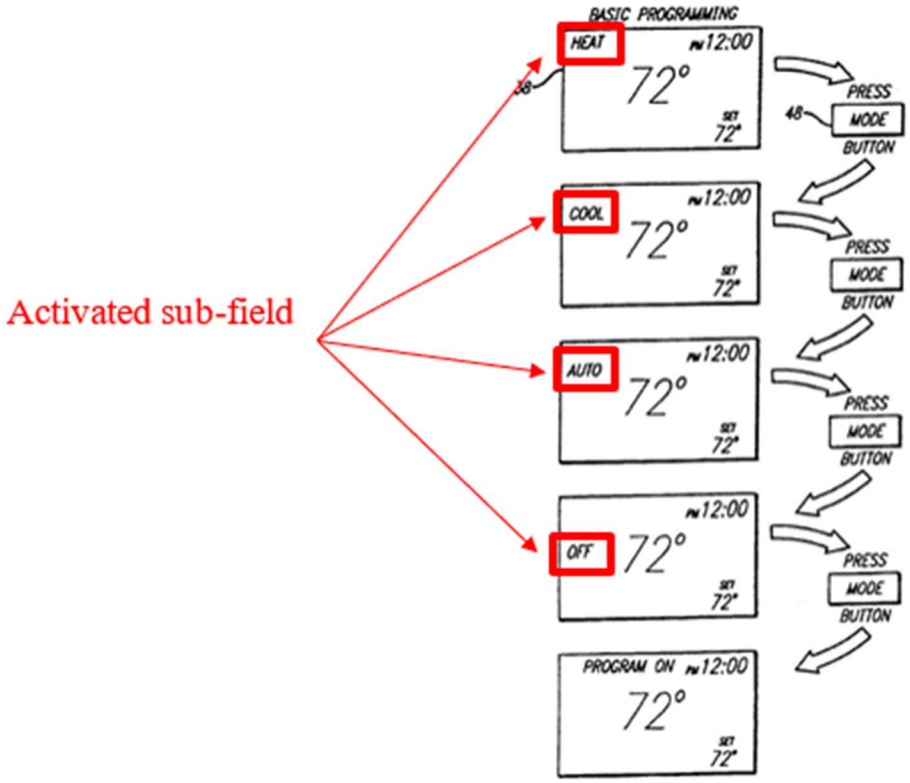

EX1004, Fig. 6 (annotated).

Cardio Manual also discloses this limitation. EX1002, ¶¶292-300. As shown below, *Cardio Manual* discloses a legend that indicates what mode the thermostat is in:

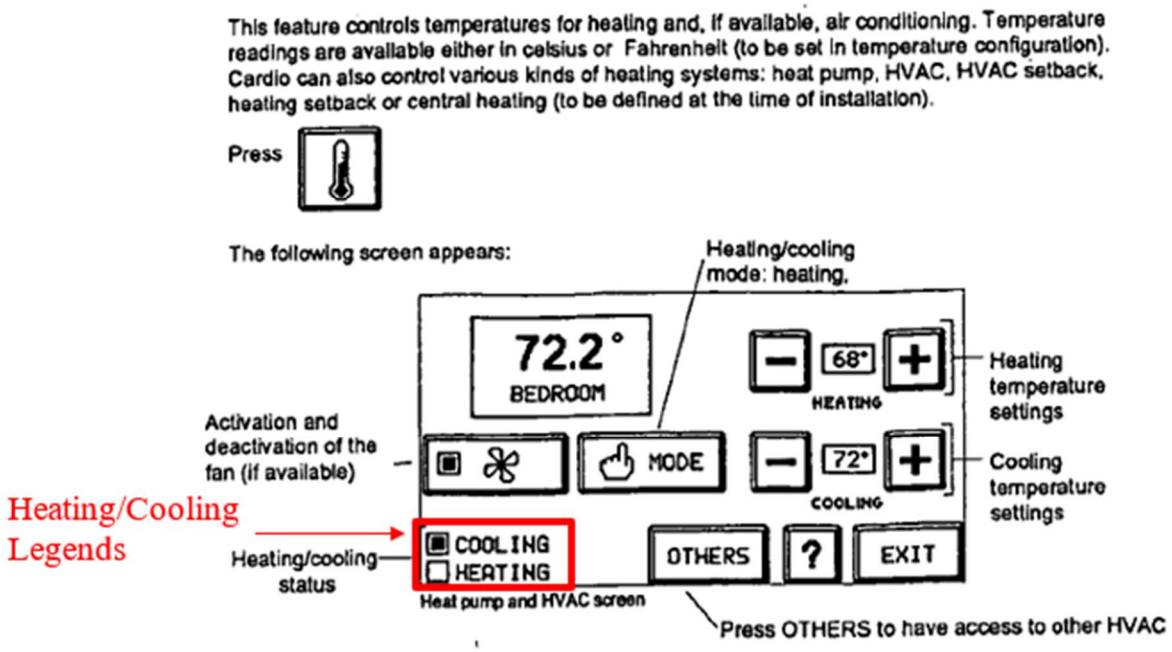

EX1012, 7 (annotated). The "legend" in *Cardio Manual* is the "heating/cooling status" indicators which a POSITA would have understood as having the appropriate box blackened in to indicate the mode that the thermostat was in. EX1002, ¶293. This legend is "indicative of a first control function of said thermostat, which first control function is for controlling a first space conditioning equipment component, which first control function is active when the first legend is viewable." *Id.* This is so because the legend indicates a function of the thermostat (e.g., cooling) and a POSITA would have understood that, in this mode, the thermostat is controlling air conditioning equipment. *Id.* A POSITA would have understood the function of controlling the air conditioning is active when the box is darkened next to the word "cooling." *Id.*

In IPR2022-01402, Patent Owner argued that a "legend" must be "displayed on a virtual button." EX1017, 5. As discussed above, this claim construction is wrong. *Supra* §IX.A.2.i.

To the extent the Board agrees with Patent Owner that a legend must be "displayed on" a virtual button, the claim is still obvious. EX1002, ¶296. Having the legend on the button is simply a matter of design choice and a POSITA would have been motivated to include the legend on the button itself to save valuable real estate on the thermostat screen. *Id.* As discussed above, *Bier* teaches that one could put a legend directly on a virtual button. *Supra*, §IX.A.2.i. The same obviousness analysis set forth in §IX.A.1.i applies here and makes it obvious to put the legend on the virtual buttons of *Cardio Manual.* *Id.* *Dushane* and *Cardio Manual* are analogous art as discussed in §IX.B.2.c and is analogous to *Bier* because all three references concern user interface design. EX1002, ¶¶296, 298; *Supra* §IX.B.2.c.

A POSITA would have had a reasonable expectation of success in doing so because this is a simple matter of changing the graphic display of the button on the LCD—a simple software change. EX1002, ¶299. This would be facilitated by *Cardio Manual*'s LCD, which is a dot matrix LCD. EX1008, 212:6-9; EX1002, ¶299.

It would have been obvious to a POSITA to apply *Bier's* teachings concerning the positioning of a legend indicative of the control function to the system of *Dushane and Cardio Manual*. EX1002, ¶300. Doing so would have merely involved applying a known technique (having a legend indicative of a control function associated with a virtual button) to a known device (*Cardio Manual's* thermostat system). *Id.* When *Bier*'s teachings are applied to the combined *Dushane-Cardio Manual* system, *Dushane's* thermostat system selectively establishes its legends indicative of the current control function on *Cardio Manual*'s virtual button, as disclosed by *Bier*. *Id.*

k. **1[j]**

Dushane, in view of *Cardio Manual* discloses element 1[j]. *Id.*, ¶¶301-03. *Cardio Manual* discloses having a virtual 'Mode' button, to switch between heating and cooling modes. EX1012, 7.

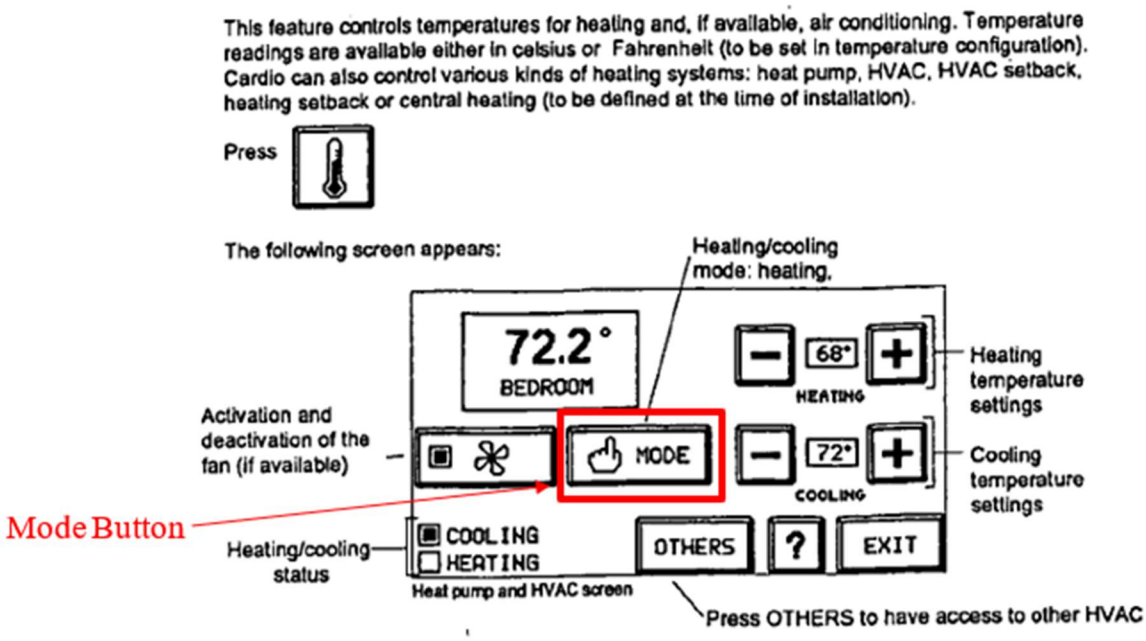

Id.(annotated).

It is not clear from *Cardio Manual* how it is determined whether the virtual mode button has been pressed. A POSITA would have found it obvious to make that determination by using software to read the position on the touchscreen juxtaposed with the predetermined position of the virtual icon to determine if the representation of said virtual mode button has been touched. EX1002, ¶303. According to Mr. Rosen, it was within the common knowledge of a POSITA to have touchscreens that allowed determination by a program if a specific location (the virtual button) had been touched by reading the position on the touch pad juxtaposed with a first predetermined position on said liquid crystal display. EX1008, 160:1-161:6. Because this was common knowledge, it would have been obvious for a POSITA to create a control program to perform this function. EX1002, ¶303. A

POSITA would have been motivated to do so as one design choice for determining if a button had been pushed. *Id.*

Once virtual buttons are created on a touchscreen, they are only useful if a POSITA can determine if they have been pushed. *Id.* A POSITA would be motivated to use this known method to determine whether a button has been pushed. *Id.* Because it was a known method, a POSITA would have had a reasonable expectation of success in employing a program to perform the recited function. *Id.*

l. **1[k]:**

Dushane, in view of *Cardio Manual,* discloses element 1[k]. *Id.*, ¶¶304-07. *Dushane* discloses a system with various operating modes, including a HEAT mode where signals are "provided to a heating apparatus such as a furnace," and a COOL mode where signals are "provided to a cooling apparatus such as an air conditioner." EX1004*,* 12:50-59; *Supra*, §IX.B.2.k. *Dushane* discloses transitioning "between the aforementioned operating modes… by pressing the mode button 48." EX1004*,* 12:66-67; EX1002, ¶304. A POSITA would have understood that when *Dushane*'s system is in HEAT mode, pressing the mode button would cause the system to determine that it has been switched to COOL mode, and thus directed to control a second piece of space conditioning equipment, a cooling apparatus. EX1002, ¶305. *Dushane* discloses pressing a physical button to determine the system has been directed to control a second piece of space conditioning equipment. EX1004,

Fig. 6, 12:66-67. When *Dushane*'s system is combined with *Cardio Manual* as discussed above, *Dushane*'s physical buttons are implemented with *Cardio Manual's* touchscreen and virtual buttons such that the combined system discloses pressing a virtual button to determine that the system has been directed to control a second piece of space conditioning equipment. *Supra*, §IX.B.2.i-k; EX1002, ¶305.

Cardio Manual discloses the virtual mode button to switch between heating mode and cooling mode:

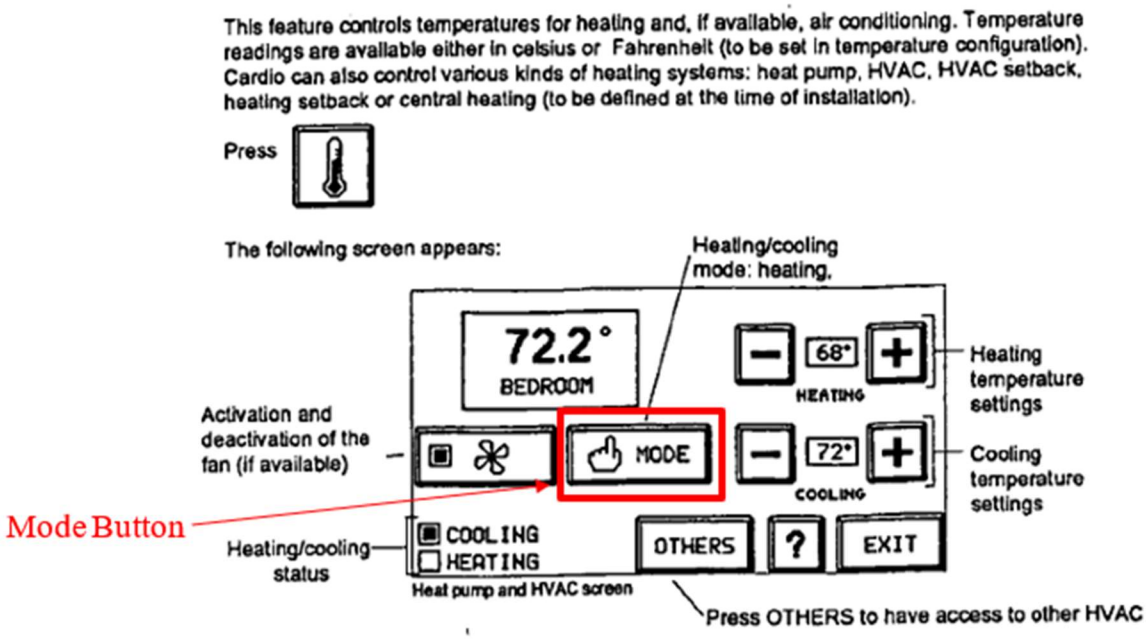

EX1012, 7 (annotated). A POSITA would have understood that when the mode button is touched, the thermostat would change between heating and cooling mode and an indication of the mode would be indicated in the boxes for "heating/cooling status." EX1002, ¶307; EX1014, 5. A POSITA would have understood that the thermostat would control a cooling device in COOL mode and a heating device in

HEAT mode, as the thermostat would not function properly otherwise. EX1002, ¶307.

m. **1[l]:**

Dushane, in view of *Cardio Manual,* discloses element 1[l]. *Id.*, ¶¶308-09. *Dushane* discloses having a HEAT mode where signals are "provided to a heating apparatus such as a furnace," and a COOL mode where signals are "provided to a cooling apparatus such as an air conditioner." EX1004, 12:50-59; *Supra*, §IX.B.2.l. *Dushane* discloses transitioning between these modes "by pressing the mode button 48." EX1004, 12:66-67; EX1002, ¶308. A POSITA would have understood that when *Dushane*'s system is in HEAT mode and thus controlling a heating apparatus, pressing the mode button would activate a second control function, COOL mode, for controlling a second piece of space conditioning equipment, a cooling apparatus. EX1002, ¶308.

As discussed above, this limitation is disclosed by *Cardio Manual* because a POSITA would have understood that when one switches from cooling mode to heating mode by pressing the virtual mode button, the cooling apparatus is turned off and the heating apparatus is activated and vice versa. *Id.*, ¶309; *Supra*, §IX.B.2.l. Once the new mode is entered, a POSITA would have understood that a control function for the new mode is activated, as otherwise, the system would not function properly. EX1002, ¶309.

n. **1[m]:**

For the same reason element 1(i) is disclosed, *Dushane*, in view of *Cardio Manual* and, alternatively, in view of *Bier*, discloses element 1(m). *Id.*, ¶310. If the first legend concerns heating when referring to element 1(i), then the second legend would concern cooling for element 1(m) or vice versa. *Id.*; *Supra* §IX.B.2.j. The same reasoning as for the first legend for element 1(i) would apply to element 1(m) for the second legend. *Id.*, ¶310; *Supra* §IX.B.2.j.

3. Claim 3:

Dushane, in view of *Cardio Manual* discloses Claim 3. EX1002, ¶311. The combination discloses Claim 1. *Supra*, §IX.B.2. *Dushane's* thermostat system includes "various combinations of environmental control apparatuses selected from a group comprising, for example, a heater, an air conditioning unit, a fan and heat pump." EX1004, 8:17-20; 8:28-29; EX1002, ¶311.

4. Claim 4:

Dushane, in view of *Cardio Manual* and *Bier*, discloses and/or renders obvious Claim 4. EX1002, ¶¶312-13. The combination discloses Claim 3. *Supra*, §IX.B.3. *Dushane* teaches a thermostat system that "can be modified to control additional and/or other apparatuses and devices such as a two-stage heat pump." EX1004, 8:31-33. A POSITA would have understood that if the system is modified to control additional apparatuses, a new mode would be displayed to indicate the additional apparatus is being controlled. EX1002, ¶312. A

POSITA would have understood that the control program would be modified to perform the same functions previously performed for switching between the first and second modes. *Id*. After a third piece of equipment is added, it would have been obvious to modify the control program to control the thermostat such that "if the first virtual button is been touched again after step D)3), determining that the thermostat controls a third space conditioning equipment component, activating a third control function for controlling the third space conditioning equipment component, and changing the second legend to a third legend indicative of the third control function of the thermostat." *Id.* It was well-known to have the thermostat operate in this manner for the additional equipment as taught by *Dushane* so that the thermostat operation was intuitive to the user—e.g., the thermostat would act in essentially the same way when switching from the first mode to the second mode as when it switched from the second mode to the third mode. *Id.* For the same reasons, a POSITA would have had a reasonable expectation of success as to elements 1[h]-1[m], a POSITA would have had the same reasonable expectation of success here because the control program is performing substantially the same functions. *Id.*

To the extent that the *Dushane-Cardio Manual* combination does not disclose having "third legend indicative of the third control function," because the legend must be on the button, then *Bier* makes it obvious to have such a legend for the same reasons discussed in §IX.B.2.j and §IX.B.2.n. *Id.*, ¶313.

5. Claim 5:

Dushane, in view of *Cardio Manual*, or further in combination with *Bier,* discloses Claim 5. *Id.*, ¶¶314-17. The combination discloses Claim 4. *Supra*, §IX.B.4. *Dushane* describes a thermostat that can control "a heater." EX1004, 8:19; 12:56-57; EX1002, ¶314.

Dushane describes "a mode indication display field" where users are provided "with a visible indication that a heating operation has been selected" "when the sub-field 'HEAT' is activated." EX1004, 11:20; 11:24-26; EX1002, ¶315.

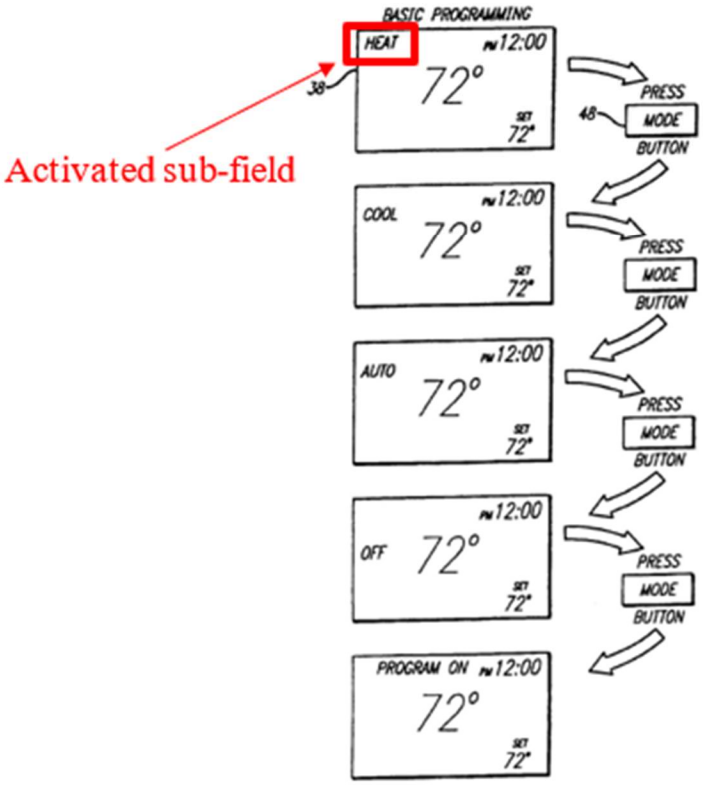

EX1004, Fig. 6 (annotated). *Dushane* discloses Claim 5 except the button in *Dushane* is not a virtual button. EX1002, ¶¶314-16.

The combination of *Dushane* and *Cardo Manual* discloses this claim because a POSITA would have understood the heater is activated when the word "heating" appears on the screen of *Cardio Manual* with the black box checked next to it. *Id.*, ¶317. To the extent the "graphic" must be on (not merely associated with) the virtual button, this limitation is further obvious in light of *Bier* for the same reasons discussed above with respect to §IX.B.2.j and §IX.B.2.n. *Id.*

6. Claim 7:

Dushane, in view of *Cardio Manual,* or further in combination with *Bier,* discloses Claim 7. *Id.*, ¶¶318-21. The combination discloses Claim 4. *Supra*, §IX.B.4. *Dushane's* thermostat controls an "air conditioning unit." EX1004, 8:19; 12:58-59; EX1002, ¶318.

Dushane describes "a mode indication display field 110" where "the user is provided with a visible indication that a cooling operation has been selected" when "the sub-field 'COOL' is activated." EX1004, 11:20; 11:27-29.

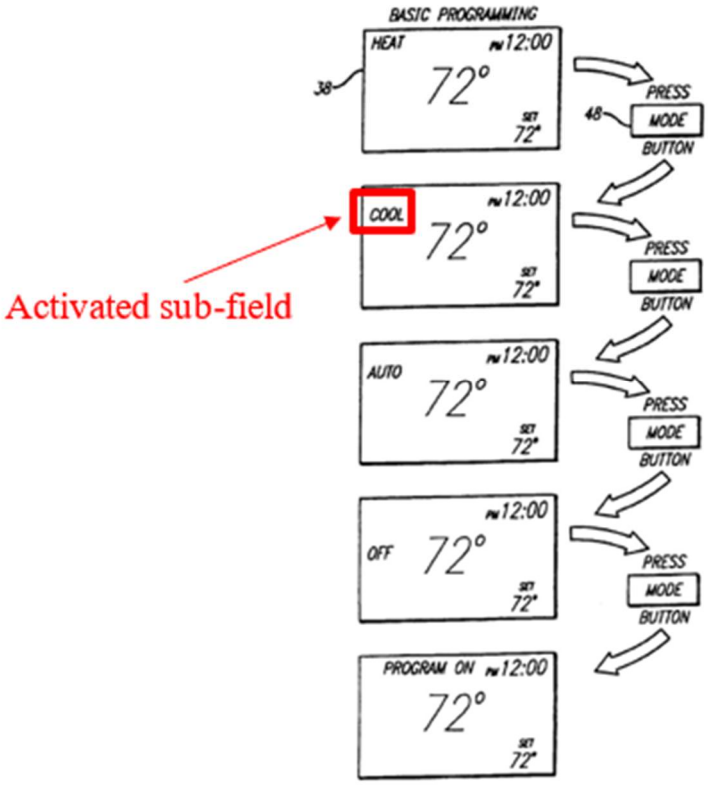

Id., Fig. 6 (annotated). *Dushane* does not disclose a virtual button. EX1002, ¶¶318-20.

However, the combination of *Dushane* and *Cardo Manual* discloses this claim because a POSITA would have understood the cooling equipment is activated when the word "cooling" appears on the screen of *Cardio Manual* with the black box checked next to it. *Id.*, ¶321. To the extent that the "graphic" must be on (not merely associated with) the virtual button, this limitation is further obvious in light of *Bier* for the same reasons discussed above with respect to §IX.B.2.j and §IX.B.2.n. *Id.*

7. Claim 9:

Dushane, in view of *Cardio Manual,* or further in combination with *Bier,* discloses Claim 9. *Id.*, ¶322. The combination discloses Claim 4. *Supra*, §IX.B.4. The analysis is the same as Claim 5, except that the "heater" of Claim 5 is required to be a "heat pump" in Claim 9. *Supra*, §IX.B.5. The remainder of the claim, other than the heat pump, is disclosed for the same reasons that the remainder of Claim 5 was disclosed for Claim 5. *Id.*, EX1002, ¶322. *Dushane's* thermostat can control a "heat pump." EX1004, 8:19.

8. Claim 11:

Dushane, in view of *Cardio Manual* or further in combination with *Bier,* discloses Claim 11. EX1002, ¶323. The analysis is the same as Claim 7, except the "air conditioning system" of Claim 7 is required to be a "heat pump" in Claim 11. *Supra*, §IX.B.6. The remainder of the claim, other than the heat pump, is disclosed for the same reasons the remainder of Claim 7 was disclosed. EX1002, ¶323. *Dushane's* thermostat can control a "heat pump." EX1004, 8:19; 12:58-59. A POSITA would have understood a cooling apparatus can include a heat pump. EX1002, ¶323. The disclosure of providing signals to a "cooling apparatus" discloses to a POSITA providing signals to any type of cooling apparatus, such as a heat pump. *Id.* To the extent that *Dushane* does not disclose a heat pump in a cooling mode with the word "cool" displayed, it was obvious to display "cool" when

a heat pump was used for cooling so the user would have understood that the heating pump actually was in cooling mode. *Id.* A POSITA would have had a reasonable expectation of success because heat pumps operate in a cooling mode and displaying the graphic on the screen with the word "cool" is a simple matter of programming the thermostat to display "cool" when the heat pump is being operated in cooling mode. *Id.*

9. Claim 14:

Dushane, in view of *Cardio Manual* and *Bier,* discloses Claim 14. EX1002, ¶¶324-25. This combination renders Claim 1 obvious. *Supra*, §IX.B.2. *Cardio Manual* discloses a system capable of displaying different buttons in the same physical location, on different screens as shown in *Cardio Manual*'s temperature control and scheduling screens. EX1014, 6.

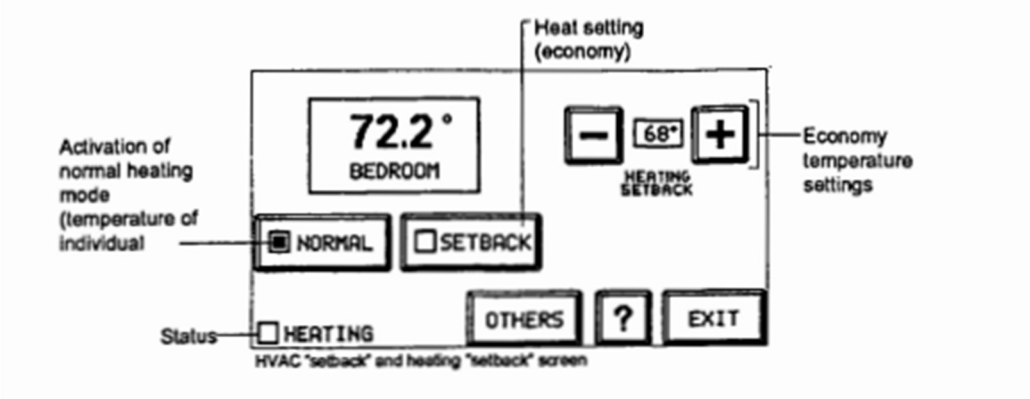

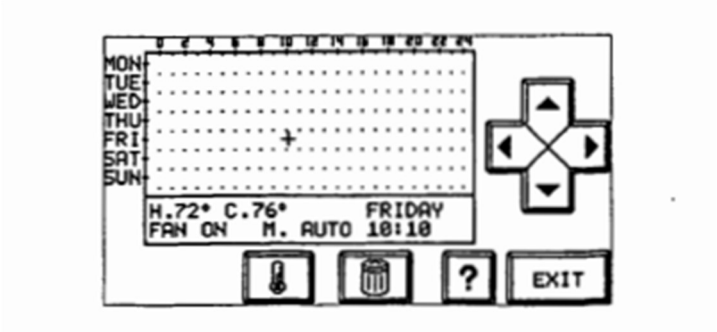

Id.; EX1012, 7, 23. A POSITA would have understood that to have that capability, the device must utilize a dot matrix LCD. EX1002, ¶325. Mr. Rosen admitted *Cardio Manual* discloses a "a dot-matrix display" for this reason. EX1008, 217:7-19, 212:3-16.

X. SECONDARY CONSIDERATIONS

Petitioner is aware of no evidence of secondary considerations that would meaningfully rebut a finding of obviousness. EX1002, ¶¶326-27. Petitioner reserves the right to rebut any purported objective evidence of non-obviousness raised by PO.

XI. INSTITUTION SHOULD BE GRANTED

A. Discretion Under 35 U.S.C. §314(a)

The Board should not exercise its discretion under §314(a) to deny this Petition. Although another petition has been filed against the '318 Patent, it was filed by an unrelated third-party. *See Gen. Plastic Indus. Co. v. Canon Kabushiki Kaisha*, IPR2016-01357, Paper 19 at 15-16 (P.T.A.B. Sept. 6, 2017) (precedential).

If the Board applies the analysis in *NHK Spring Co. Ltd v. Intri-Plex Techs. Inc.*, IPR2018-00751, Paper 8 at 19-20 (P.T.A.B., Sept. 12, 2018) (precedential)[7] or *Apple Inc. v. Fintiv, Inc.*, IPR2020-00019, Paper 11 (P.T.A.B. Mar. 20, 2020) (precedential), those factors taken together support institution.

Factor 1: Potential Stay

While Petitioner intends to move for a stay, the Board should "not attempt to predict how the district court in the related district court litigation will proceed[.]" *Sand Revolution II LLC v. Continental Intermodal Group-Trucking LLC*, IPR2019-01393, Paper 24 at 7 (P.T.A.B. Jun. 16, 2020) (informative).

Factor 2: Trial Date

Related litigation is set for jury beginning June 3, 2024. EX1011, 2. That is approximately three months before the projected September 2024 statutory deadline for the Board to enter a final written decision in this proceeding (if instituted). "[T]he decision whether to institute will likely implicate other factors . . . such as the resources that have been invested in the parallel proceeding." *Apple*, IPR2020-00019, Paper 11 at 9. As discussed below, litigation is in its early stages.

---

[7] Petitioner recognizes the Board must apply its precedential caselaw, but specifically reserves its objection to the Board's application of the *NHK-Fintiv* caselaw as non-justiciable under the APA.

Trial dates are uncertain. *See Halliburton Energy Servs., Inc. v. U.S. Well Servs., LLC*, IPR2021-01037, Paper 12 (P.T.A.B. Jan. 19, 2022). Even if the trial is scheduled several months before the Board's final written decision, this factor would be "at most, neutral." *Micron Tech., Inc. v. Godo Kaisha IP Bridge 1*, IPR2020-01008, Paper 10 at 14 (P.T.A.B. Dec. 7, 2020); *Google LLC v. Parus Holdings, Inc.,* IPR2020-00846, Paper 9 at 12-14 (P.T.A.B. Oct. 21, 2020).

If trial proceed were to proceed as scheduled, this factor at most "only slightly favors" denying institution. *See Micron Technology, Inc. v. Vervain, LLC*, IPR2021-01550, Paper 11 at 10 (P.T.A.B. Apr. 11, 2022). In that case, it is outweighed by other factors here, including the relatively early stage of litigation, as discussed below. *See, e.g.*, *Microsoft Corp. v. WSOU Investments, LLC, IPR2021-00930*, Paper 8 at 6-13 (PTAB Dec. 2, 2021); *Facebook, Inc. v. USC IP Partnership, L.P.*, IPR2021-00033, Paper 13 at (P.T.A.B. Apr. 30, 2021).

Factor 3: Investment in the parallel proceeding

Neither the parties nor the court have expended substantial effort in the parallel proceeding. Petitioner filed a motion to dismiss the complaint as to three of the five asserted patents under 35 U.S.C. § 101 on June 21, 2022. The motion was granted in part and denied in part on January 4, 2023. Patent Owner served its preliminary infringement contentions on October 20, 2022, and its amended infringement contentions on November 21, 2022. Petitioner served its invalidity

contentions on December 15, 2022. The claim construction process has only just begun. Claim construction briefing with be completed by May 11, 2023, followed by a potential hearing. EX1023, 1. It would be premature to speculate as to "the amount and type of work" that will have been completed when the institution decision is made. *Google*, IPR2020-00846, Paper 9 at 17-18.

Regardless, there will certainly be "much work remain[ing] in the district court case as it relates to invalidity" when this proceeding is ready for institution. *Sand Revolution*, Paper 24 at 10. Coupled with Petitioner's diligence in filing this Petition, this factor fails to support (and even weighs against) discretionary denial. *Cf. id.,* 10-11; *Google*, IPR2020-00846, Paper 9 at 18.

Factor 4: Issue Overlap

This Petition challenges each district court asserted claim. EX1026, 1. The Petition challenges additional claims not asserted in the district court litigation (Claim 14). Petitioner served invalidity contentions in the parallel proceeding. Any overlap at this point would be speculative. This factor fails to support discretionary denial.

Factor 5: Party Overlap

Petitioner and Patent Owner are parties in the NDTX Litigation.

Factor 6: Other Circumstances Favoring Institution

Additional circumstances favor institution. Petitioner acted with diligence. Petitioner has gained no advantage from the parallel litigation, which favors institution. *See Oticon Med. AB v. Cochlear Ltd.*, IPR2019-00975, Paper 15 at 22-23 (P.T.A.B. Oct. 16, 2019) (precedential).

The merits favor institution as the strong grounds in this Petition demonstrate. "In such cases, the institution of a trial may serve the interest of overall system efficiency and integrity because it allows the proceeding to continue in the event that the parallel proceeding settles or fails to resolve the patentability question presented in the PTAB proceeding." *Google*, IPR2020-00846, Paper 9 at 21 (quoting *Fintiv*, Paper 11 at 14-15). Grounds 1-2 render obvious every challenged claim. Because the merits of Petitioner's challenge are compelling, this factor weighs against denying institution. *Fintiv*, IPR2020-00019, Paper 11 at 14-15.

"Considering the *Fintiv* factors as part of a holistic analysis," it would undermine "the interests of efficiency and integrity of the system" if the Board were "to deny institution of a potentially meritorious Petition." *Sand Revolution*, Paper 24 at 14.

B. Discretion Under 35 U.S.C. §325(d)

The Board should not exercise its discretion under 35 U.S.C. §325(d). Only *Cardio Manual* was cited during prosecution and not used in a claim rejection. The

grounds based on *Geiwitz* (Ground 1) and *Dushane* (Ground 2) were not considered by the Examiner during prosecution. Although *Cardio Manual* was cited, along with 26 other references, the Examiner could not have considered them in conjunction with the primary references above. Though this patent is the subject of IPR2022-01402, filed by Unified Patents, the primary references relied upon in Ground 2 were not relied upon. The Board should decline to exercise its discretion under 35 U.S.C. §325(d).

XII. CONCLUSION

Petitioner respectfully requests institution of IPR and that the Challenged Claims be cancelled as unpatentable pursuant to 35 U.S.C. §318(b).

Respectfully Submitted,

March 29, 2023

/David G. Wille/
David G. Wille (Reg. No. 38,363)
BAKER BOTTS L.L.P.
2001 Ross Avenue, Suite 900
Dallas, TX 75201-2980
Tel: 214-953-6595
david.wille@bakerbotts.com

Attorneys for Petitioner, Lennox Industries Inc.

CERTIFICATE OF SERVICE

In accordance with 37 C.F.R. §§ 42.6(e) and 42.105, the undersigned certifies that on March 29, 2023, a complete and entire copy of the **PETITION FOR *INTER PARTES* REVIEW OF CLAIMS 1, 3-5, 7, 9, 11, and 14 OF U.S. PATENT NO. 7,156,318** including exhibits and testimony relied upon and a power of attorney were served on Patent Owner via FedEx overnight at the correspondence address of record for the subject patent and counsel for Patent Owner in the NDTX Litigation, as included below:

Marc Hankin
Hankin Patent Law, APC
12400 Wilshire Boulevard, Suite 1265
Los Angeles, CA 90025

Hao Ni
NI, WANG & MASSAND, PLLC
8140 Walnut Hill Ln., Ste. 500
Dallas, TX 75231

Date: March 29, 2023

/David G. Wille/
David G. Wille (Reg. No. 38,363)
BAKER BOTTS L.L.P.
2001 Ross Avenue, Suite 900
Dallas, TX 75201-2980
Tel: 214-953-6595
david.wille@bakerbotts.com

Attorneys for Petitioner, Lennox Industries Inc.

CERTIFICATION UNDER 37 C.F.R. § 42.24(d)

Pursuant to 37 C.F.R. § 42.24(d), the undersigned hereby certifies that the word count under § 42.24(a)(1) for the foregoing Petition for *Inter Partes* Review totals 13,997 words, within the 14,000 word limit allowed under § 42.24(a)(1)(i).

Date: March 29, 2023

/David G. Wille/
David G. Wille (Reg. No. 38,363)
BAKER BOTTS L.L.P.
2001 Ross Avenue, Suite 900
Dallas, TX 75201-2980
Tel: 214-953-6595
david.wille@bakerbotts.com

Attorneys for Petitioner, Lennox Industries Inc.