US 20030034898A1

(19) United States

(12) Patent Application Publication (10) Pub. No.: US 2003/0034898 A1

Shamoon et al. (43) Pub. Date: Feb. 20, 2003

(54) THERMOSTAT AND REMOTE CONTROL SYSTEM AND METHOD

(76) Inventors: **Charles G. Shamoon**, Raleigh, NC (US); **Deborah H. Shamoon**, Raleigh, NC (US); **Brian Spinks**, Wendell, NC (US); **Dale E. Dorsett**, Raleigh, NC (US)

Correspondence Address:
Richard C. Litman
LITMAN LAW OFFICES, LTD.
P.O. Box 15035
Arlington, VA 22215 (US)

(21) Appl. No.: **09/987,035**

(22) Filed: **Nov. 13, 2001**

Related U.S. Application Data

(63) Continuation-in-part of application No. 09/931,985, filed on Aug. 20, 2001.

Publication Classification

(51) **Int. Cl.**[7] **G05B 19/02**

(52) **U.S. Cl.** **340/825.72**; 340/825.24

(57) **ABSTRACT**

A thermostat and remote control apparatus, that is made up of a housing, an interface, a plurality of icons on the interface, corresponding to controls for items, a display screen, indicating the current temperature setting, time and date, a recessed program and enter button for entering temperature settings to a thermostat, a clear button for deleting any entered information, a cradle that is used to recharge the apparatus, a universal serial bus port (USB) connecting a computerized device to the apparatus, an RS-232 port to standardize a transmission of serial data between any devices and the apparatus, and a microcontroller for processing information and data. The apparatus utilizes infrared and radio frequency technology for transmitting and receiving information from various items. A controlled apparatus with a microprocessor (e.g., a child monitor) is also disclosed.

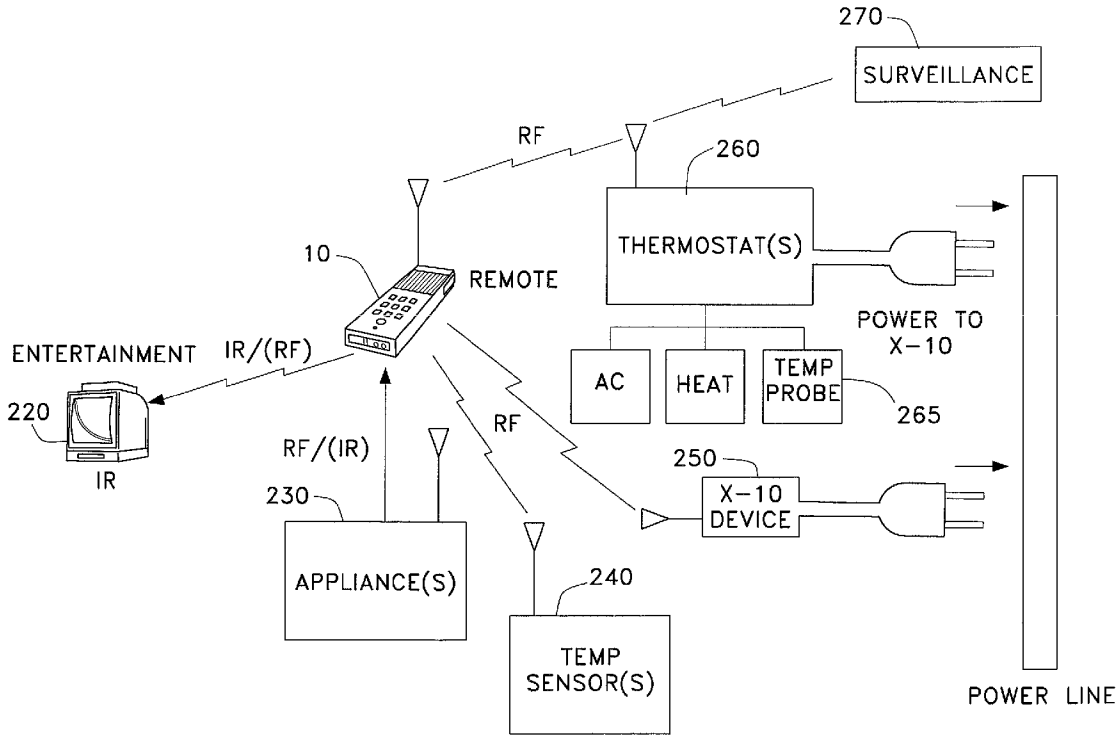

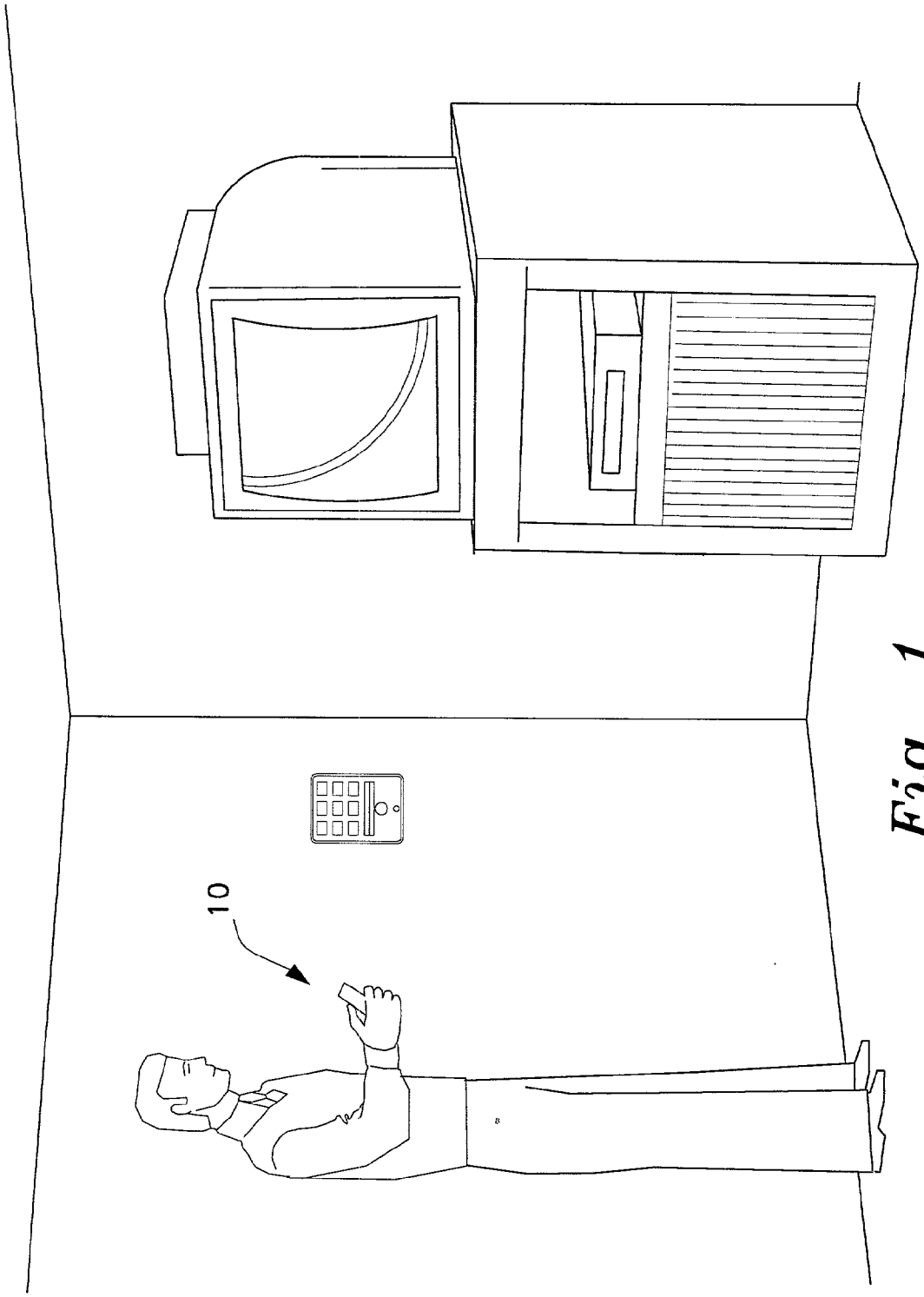

Fig. 1

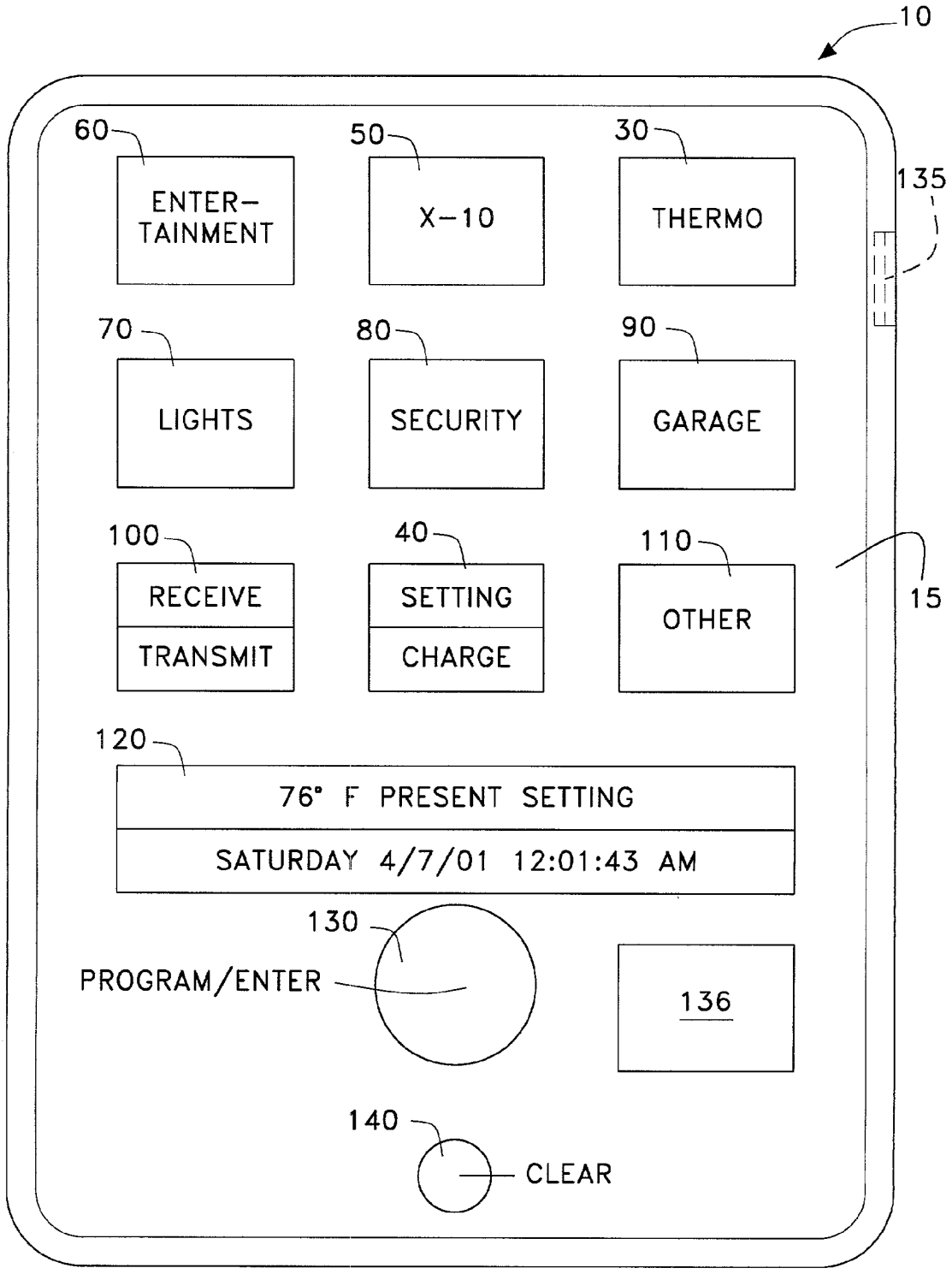
10
60
ENTER-
TAINMENT
50
X-10
30
THERMO
135
70
LIGHTS
80
SECURITY
90
GARAGE
100
RECEIVE
TRANSMIT
40
SETTING
CHARGE
110
OTHER
15
120
76° F PRESENT SETTING
SATURDAY 4/7/01 12:01:43 AM
130
PROGRAM/ENTER
136
140
CLEAR

Fig. 2

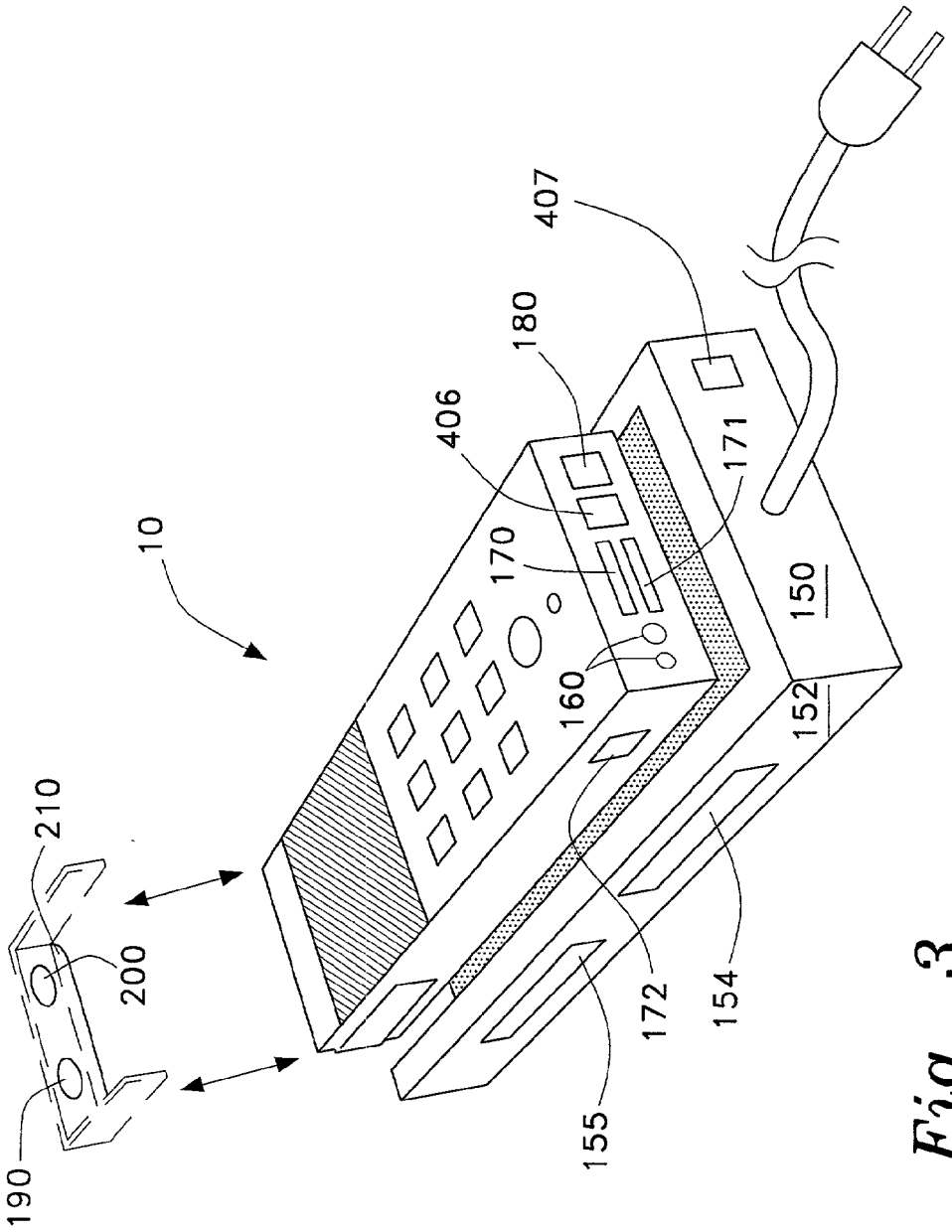

Fig. 3

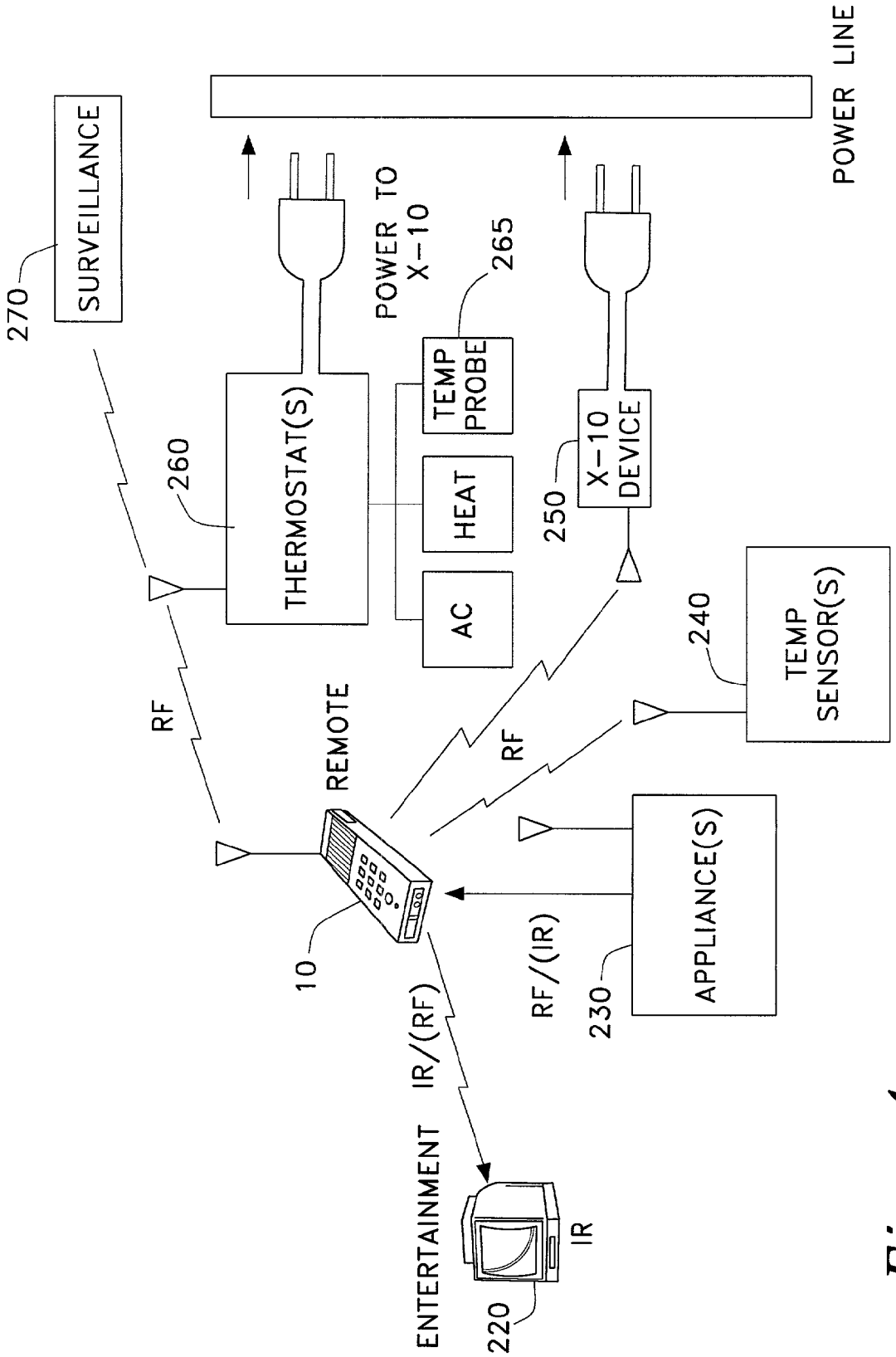
POWER LINE
SURVEILLANCE
270
POWER TO X-10
265
TEMP PROBE
THERMOSTAT(S)
260
HEAT
AC
X-10 DEVICE
250
TEMP SENSOR(S)
240
RF
REMOTE
RF
APPLIANCE(S)
10
RF/(IR)
230
IR/(RF)
ENTERTAINMENT
IR
220

Fig. 4

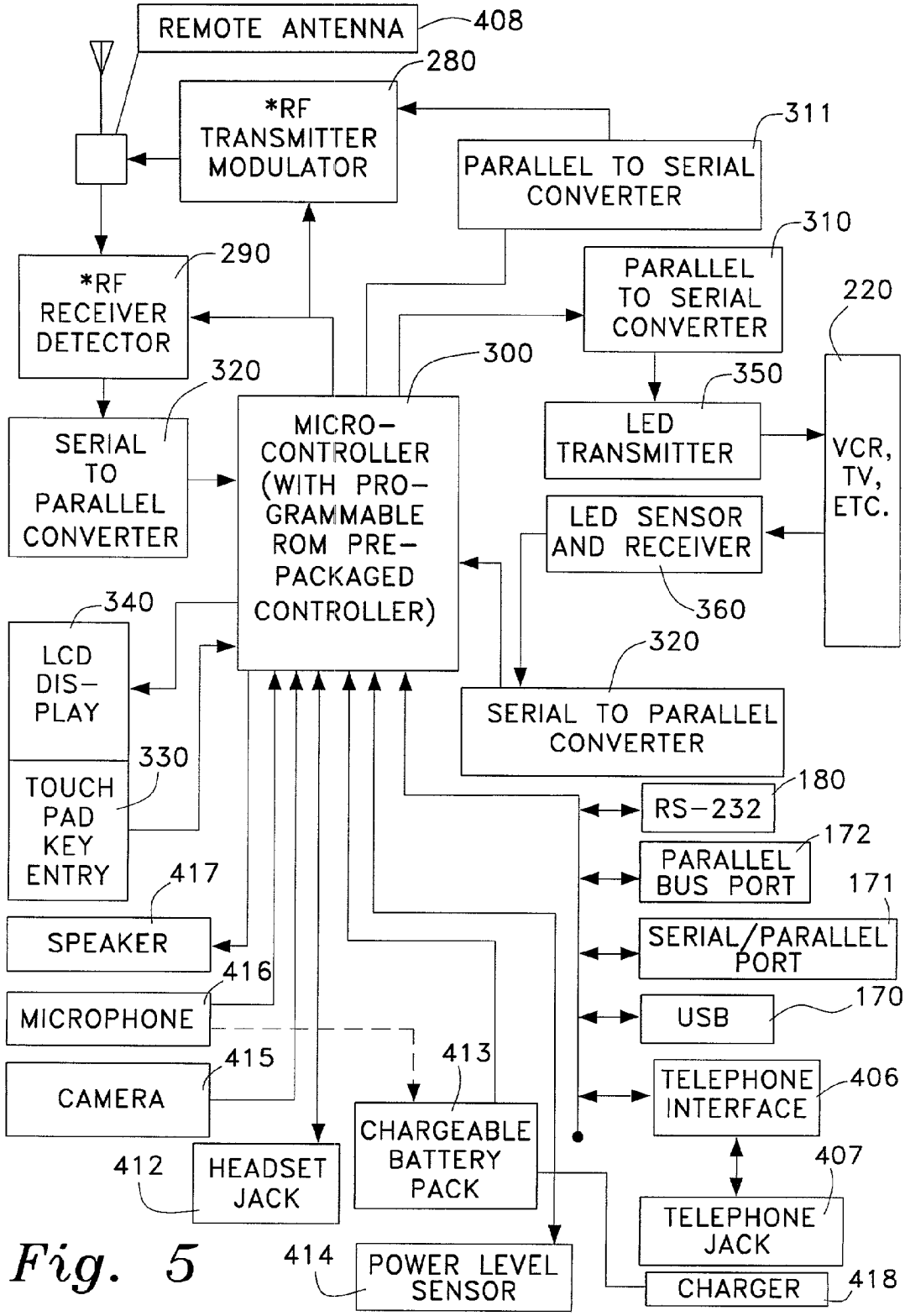
REMOTE ANTENNA
408
280
*RF TRANSMITTER MODULATOR
311
PARALLEL TO SERIAL CONVERTER
310
290
*RF RECEIVER DETECTOR
PARALLEL TO SERIAL CONVERTER
220
300
320
350
SERIAL TO PARALLEL CONVERTER
MICRO-CONTROLLER (WITH PRO-GRAMMABLE ROM PRE-PACKAGED CONTROLLER)
LED TRANSMITTER
VCR, TV, ETC.
LED SENSOR AND RECEIVER
360
340
LCD DIS-PLAY
320
SERIAL TO PARALLEL CONVERTER
330
TOUCH PAD KEY ENTRY
180
RS-232
172
PARALLEL BUS PORT
417
171
SPEAKER
SERIAL/PARALLEL PORT
416
MICROPHONE
USB
170
415
413
CAMERA
TELEPHONE INTERFACE
406
CHARGEABLE BATTERY PACK
412
HEADSET JACK
407
TELEPHONE JACK
414
POWER LEVEL SENSOR
CHARGER
418

Fig. 5

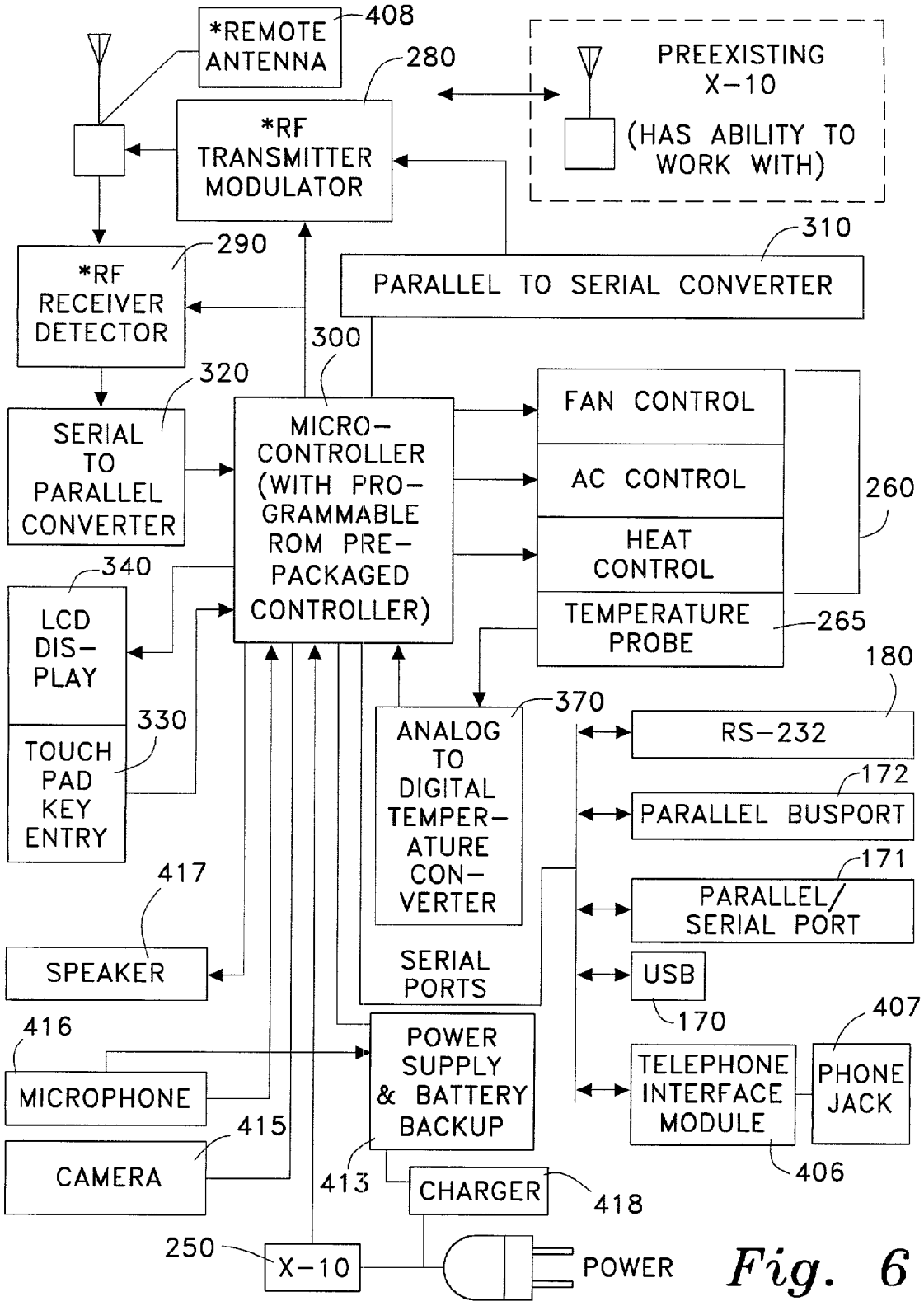
*REMOTE ANTENNA
408
280
*RF TRANSMITTER MODULATOR
PREEXISTING X-10
(HAS ABILITY TO WORK WITH)
310
PARALLEL TO SERIAL CONVERTER
290
*RF RECEIVER DETECTOR
300
320
SERIAL TO PARALLEL CONVERTER
MICRO-CONTROLLER (WITH PRO-GRAMMABLE ROM PRE-PACKAGED CONTROLLER)
FAN CONTROL
AC CONTROL
HEAT CONTROL
TEMPERATURE PROBE
260
265
340
LCD DIS-PLAY
330
TOUCH PAD KEY ENTRY
370
ANALOG TO DIGITAL TEMPER-ATURE CON-VERTER
180
RS-232
172
PARALLEL BUSPORT
171
PARALLEL/ SERIAL PORT
417
SPEAKER
SERIAL PORTS
USB
170
407
416
MICROPHONE
POWER SUPPLY & BATTERY BACKUP
TELEPHONE INTERFACE MODULE
PHONE JACK
415
CAMERA
413
CHARGER
418
406
250
X-10
POWER

Fig. 6

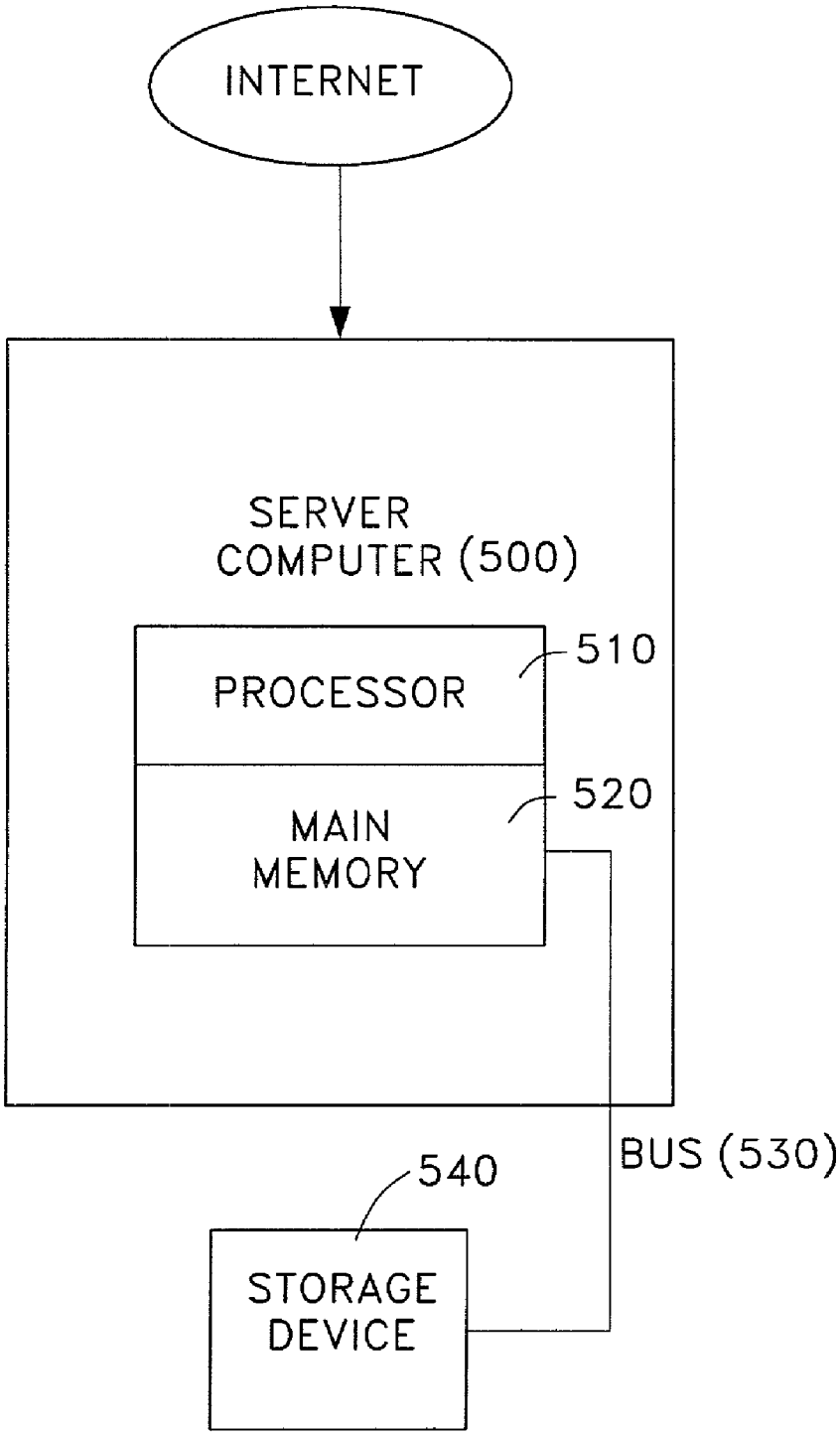
INTERNET
SERVER
COMPUTER (500)
PROCESSOR
510
MAIN
MEMORY
520
BUS (530)
540
STORAGE
DEVICE

Fig. 7

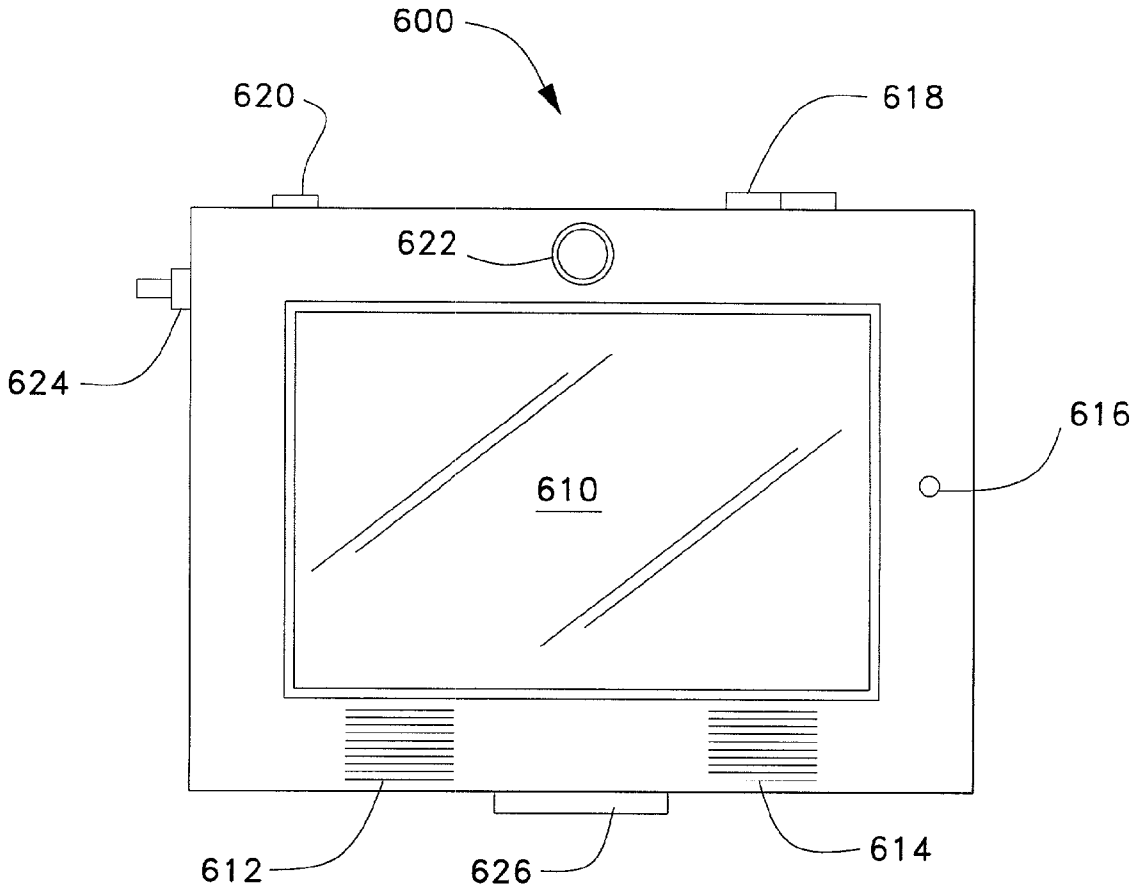

Fig. 8

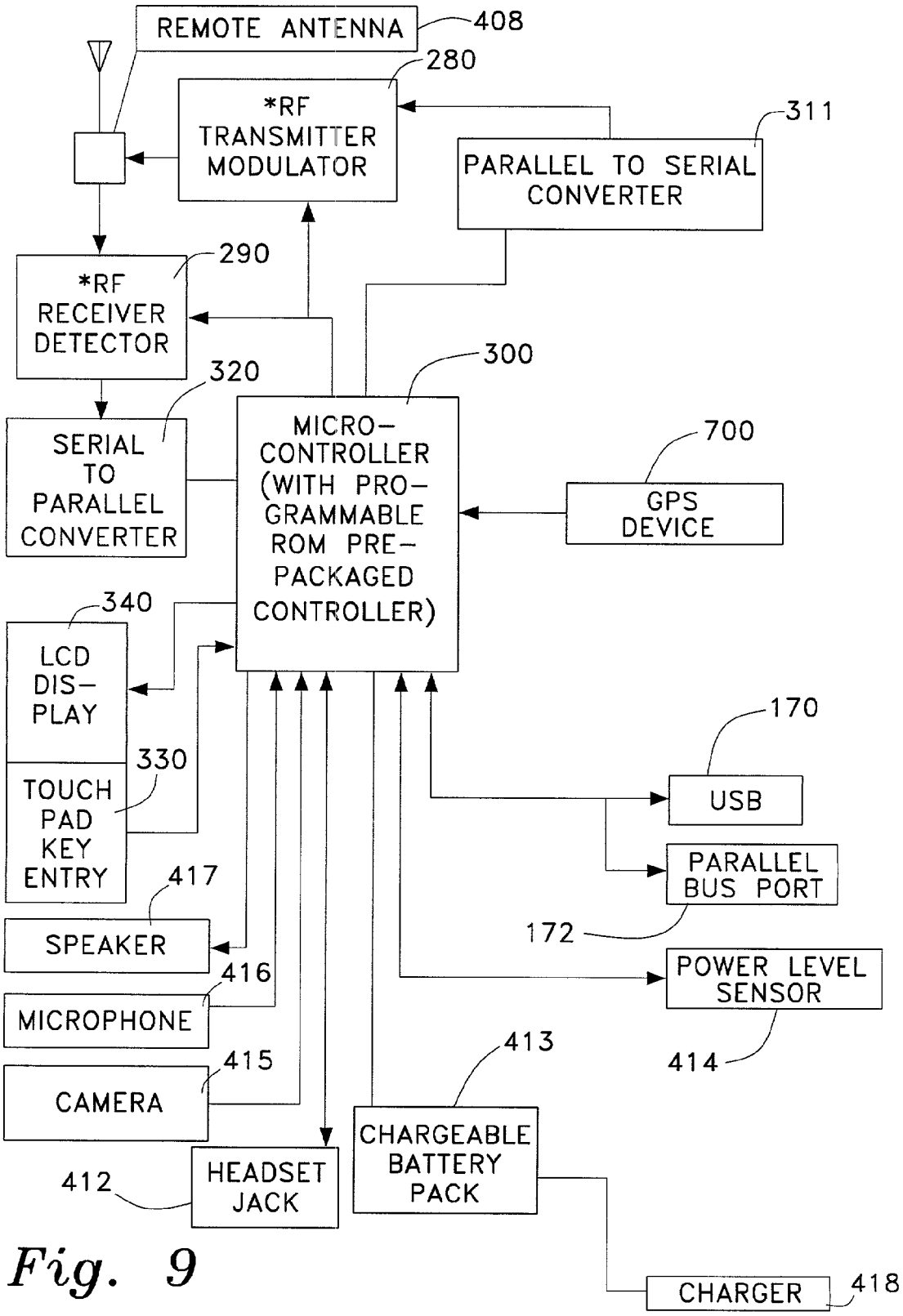
REMOTE ANTENNA
408
280
*RF TRANSMITTER MODULATOR
311
PARALLEL TO SERIAL CONVERTER
290
*RF RECEIVER DETECTOR
320
300
SERIAL TO PARALLEL CONVERTER
MICRO-CONTROLLER (WITH PRO-GRAMMABLE ROM PRE-PACKAGED CONTROLLER)
700
GPS DEVICE
340
LCD DIS-PLAY
330
TOUCH PAD KEY ENTRY
170
USB
PARALLEL BUS PORT
172
417
SPEAKER
416
MICROPHONE
POWER LEVEL SENSOR
414
415
CAMERA
413
CHARGEABLE BATTERY PACK
412
HEADSET JACK
CHARGER
418

Fig. 9

THERMOSTAT AND REMOTE CONTROL SYSTEM AND METHOD

CROSS-REFERENCE TO RELATED APPLICATION

[0001] This application is a continuation-in-part of U.S. Utility patent application Ser. No. 09/931,985.

BACKGROUND OF THE INVENTION

[0002] 1. Field of the Invention

[0003] The present invention relates to an intelligent thermostat controller and hand held remote controller apparatus.

[0004] 2. Description of the Related Art

[0005] Most modern families use several remote control devices to operate and utilize a wide variety of electronic equipment in their respective households. Use of a remote control is commonplace for operating televisions, stereos, garage door openers and video cassette recorders. Remote control systems are also used at the commercial level. Furthermore, a variety of different technologies can be applied to a remote control.

[0006] The related art discloses the use of a remote control to control several pieces of equipment. U.S. Pat. No. 4,965,557 issued to Schepers et al., outlines the use of the interactive control of an entertainment electronics apparatus. The apparatus can be simplified so that an unpracticed user can easily make all of the necessary or desired adjustments wanted, even in the case of a large, seemingly complex system.

[0007] U.S. Pat. No. 5,109,222 issued to Welty, describes certain improvements in remote control systems for controlling electronically operable equipment in occupiable structures, and more specifically to remote control equipment with an essentially unlimited command format such that the system is responsive to a large number of pieces of electronic equipment having different command formats, and which system can generate encoded signals compatible with any such electrically operated equipment.

[0008] U.S. Pat. No. 5,544,036 issued to Brown, Jr. et al., describes the use of an energy management and home automation system which includes one or more controllers in each facility being managed, and one or more energy consuming devices attached to each controller. Each controller responds to digital paging signals from a central command center which establish a schedule of events effecting the operation of each device, and the controller schedules each device to be operated pursuant to the programmed schedule.

[0009] U.S. Pat. No. 5,545,857 issued to Lee et al., teaches a remote control method and apparatus for a remote controller having a touch panel as an image apparatus, and performing a remote control operation of an image apparatus, such as a television, either by inputting a character onto the touch panel or by controlling a cursor according to the contact location of a finger or a pen contacting the touch panel.

[0010] U.S. Pat. No. 5,579,496 issued to Van Steenbrugge, teaches the use of a method and apparatus for processing control instructions received from at least 2 identifiable sources via a communication connection. The method can be used in apparatuses which are coupled together by a bus. The invention also relates to an apparatus provided with a control circuit adapted to perform the method.

[0011] U.S. Pat. No. 5,621,662 issued to Humphries et al., teaches a home automation system made up of a number of sub-systems for controlling various aspects of a house, such as a security system, an HVAC system, a lighting control system and an entertainment system. The network utilizes a host computer connected through a host interface to a plurality of nodes. The network is in a free form topology and employs asynchronous communication.

[0012] U.S. Pat. No. 5,818,428 issued to Eisenbrandt et al., teaches the use of a control system with a user configurable interface, particularly suitable for use in connection with appliances. Users can configure display screens at a point of sale location or at home with a personal computer. A user interface includes both the hardware and the software via which a user interacts with a control system and includes visual indicators, switches and display systems.

[0013] U.S. Pat. No. 5,924,486 issued to Ehlers et al., teaches the use of a residential or commercial environmental condition control system and, more specifically, to a system that controls internal environmental conditions to optimize comfort and minimize energy consumption cost, based on user defined parameters.

[0014] U.S. Pat. No. 6,005,490 issued to Higashihara, teaches the use of a bidirectional remote control apparatus which can exchange a control signal between a remote control transmitter and controlled equipment in two directions.

[0015] U.S. Pat. No. 6,081,750 issued to Hoffberg et al., teaches the use of an adaptive interface for a programmable system for predicting a desired user function, based on user history, as well as machine internal status and context. The apparatus receives an input from a user and other data. A predicted input is presented for confirmation by the user and the predictive mechanism is updated based on this feedback.

[0016] U.S. Pat. No. 6,216,956 B1 issued to Ehlers et al., teaches the use of an indoor environmental condition control and energy management system with a plurality of inputs. A user input receives user input parameters including a desired indoor environmental condition range for at least one energy unit price point. An indoor environmental condition input receives a sensed indoor environmental condition. An energy price input receives a schedule of projected energy unit prices per time periods.

[0017] Each of the described patents have a useful application regarding remote controls and remote control systems. None, however, can completely bypass the use of a personal computer and constantly update the readings from the components of a remote control system. No system also includes temperature setting controls with more common appliance and electronic device controls as well.

[0018] None of the above inventions and patents, taken either singularly or in combination, is seen to describe the instant invention as claimed. Thus a thermostat and remote control apparatus and method solving the aforementioned problems is desired.

SUMMARY OF THE INVENTION

[0019] The invention is a thermostat and remote control apparatus that is made up of a housing, an interface disposed in the housing, a plurality of icons on the interface, which correspond to a set of controls for items that can be monitored and controlled by the apparatus, a display screen, which indicates the current temperature setting, time and date, a recessed program and enter button that allows a user to enter temperature settings to a thermostat, a clear button for deleting any entered information, an electric cradle that is used to recharge the apparatus, serial and parallel ports, such as universal serial bus port (USB), RS-232 port and other protocols, that may be used to connect to computerized devices and for standard transmission of serial data between any devices and the apparatus and a microcontroller for processing information and data. The apparatus specifically utilizes infrared and radio frequency technology.

[0020] Accordingly, it is a principal object of the invention to provide a remote control that can make changes to a thermostat.

[0021] It is another object of the invention to provide a remote control that can be run independently of a personal computer.

[0022] It is a further object of the invention to provide a remote control that can constantly monitor, control, and update information.

[0023] It is another object of the invention to provide total PC program and function capability.

[0024] It is another object of the invention to provide total two-way communication capability.

[0025] It is another object of the invention to provide an intelligent thermostat which can control, monitor and communicate to a HVAC system and a thermostat and remote controller apparatus.

[0026] It is another object of the invention to provide a charger cradle capable of interfacing with the thermostat and remote controller apparatus providing charging power and additional memory media system that allows uploading and downloading of files and programs, and provides telephone communication.

[0027] It is an object of the invention to provide improved elements and arrangements thereof for the purposes described which is inexpensive, dependable and fully effective in accomplishing its intended purposes.

[0028] These and other objects of the present invention will become readily apparent upon further review of the following specification and drawings.

BRIEF DESCRIPTION OF THE DRAWINGS

[0029] **FIG. 1** is an environmental, perspective view of a thermostat and remote control apparatus according to the present invention.

[0030] **FIG. 2** is a front perspective view of a remote control apparatus according to the present invention.

[0031] **FIG. 3** is a perspective view of a remote control apparatus and charger according to the present invention.

[0032] **FIG. 4** is a perspective view of a remote control apparatus and its components according to the present invention.

[0033] **FIG. 5** is a block diagram of a remote control apparatus and its entertainment center components according to the present invention.

[0034] **FIG. 6** is a block diagram of a remote control apparatus and its thermostat and X-10 components according to the present invention.

[0035] **FIG. 7** is a block diagram of a remote control apparatus being used on the Internet.

[0036] **FIG. 8** is an elevational view of a remote control apparatus in the form of a watch.

[0037] **FIG. 9** is a block diagram of the remote control apparatus of the embodiment shown in **FIG. 8**.

[0038] Similar reference characters denote corresponding features consistently throughout the attached drawings.

DETAILED DESCRIPTION OF THE PREFERRED EMBODIMENTS

[0039] A general discussion of the invention and its capabilities is in order. The handheld controller of this invention performs as a handheld personal computer (PC). Thus, a principal thrust of the invention is to eliminate the need for a PC for the many and myriad applications discussed hereinbelow. The remote apparatus therefore has multiple control and monitoring capabilities which are disclosed herein. The prepackaged software will operate with a standard operating system provided in the remote control apparatus just as with any PC.

[0040] The wall thermostat controller of the invention uses the same operating system as the handheld controller, has similar hardware, and performs pretty much the same. However, the thermostat controller embodiment will not utilize all the programs of the handheld unit, and is used mainly for the control and monitoring of an HVAC system, security, etc.

[0041] There is yet a miniaturized version of the remote control apparatus in the form of a child's wrist watch, for example. Both hardware and software will be limited in this embodiment, all as explained on detail hereinbelow.

[0042] The present invention relates to an intelligent thermostat controller and hand held remote controller apparatus **10**. The thermostat and remote control apparatus **10** consolidates all remote controls into a single remote control, as well as combines the capability to monitor and control a user's thermostat and HVAC. The thermostat and remote control apparatus **10** is illustrated in **FIG. 1**.

[0043] Turning now to **FIG. 2**, the thermostat and remote control apparatus **10** has a housing and interface **15**. The housing and interface **15** displays a plurality of icons that can be chosen, which correspond to a set of controls for each item that can be controlled by the thermostat and remote control apparatus **10**. For example, an "Entertainment" icon **60** is shown and can be selected. Once selected, by depressing the "Entertainment" icon **60**, the entire face of the thermostat and remote control apparatus **10** changes to a variety of control icons that pertain to the selected icon.

[0044] In the case of the selected "Entertainment" icon **60**, the main menu would then display various components of the user's entertainment center, such as a CD player, a television, a record player and any other components of the user's entertainment center. Each component from the entertainment center has its own set of settings, which are displayed on the housing and interface **15** of the thermostat and remote control apparatus **10** once selected by the user.

[0045] The thermostat facing is the same as the remote control apparatus **10**, only without the entertainment icon **60**. With this icon, automatic or manual adjustments can be made.

[0046] An "on/off" power button **135** is provided on the casing, and is recessed to prevent accidental depression.

[0047] The settings can also include a display touch screen as well as "Volume" settings, "Channel" settings and other settings. As shown in **FIG. 2**, other icons include X-10 system settings **50**, a thermostat setting **30**, light settings **70**, a security system setting **80** and a garage setting **90**. An icon for indicating when a signal is transmitted and/or received **100** is provided and will light up the appropriate icon half when being completed. An "Other"**110** icon can also be used for adding additional and lesser used components to the thermostat and remote control apparatus **10**. The "Setting" icon **40**, also has a lower half "Charge" icon, which can be illuminated to indicate that the apparatus **10** is being charged up.

[0048] A display screen **120** is provided to display icons for each function, and programming and messaging. Thermostat setting and time and date are continually displayed on the screen, unless disabled. "Program entry" icon button **130** and "clear" icon button **140** may also be present as separate buttons, as shown in **FIG. 2**, or they may be part of the display screen **120**. A light sensor **136** is provided to sense levels of ambient light to adjust contrast and background lighting when unit is first turned on. Additional adjustments may be made via special icon(s) (not shown).

[0049] **FIG. 3** illustrates a cradle **150** that is used to charge up the apparatus **10**. The cradle **150** has two contact points **160** that are in contact with the thermostat and remote control apparatus **10** while the thermostat and remote control apparatus **10** is charging. There is also a universal serial bus (USB) port **170** that can be connected to another computer and a recommended standard (RS-232) port **180** is also used. to standardize the transmission of serial data between devices.

[0050] Cradle **150** may also connect to serial or parallel port **171** for video, media memory unit and other media. The serial/parallel port **171** may be utilized for any existing port or jack for present or future applications. Telephone jack **407** on cradle **150** provides a connection to a telephone wall jack (not shown) for telephone communications. A second telephone jack **405** on the apparatus **10** is connected to the cradle jack **407** internally of the cradle (not shown). Parallel bus port **172** may be used to provide a full control address data bus interface connector for external module interface.

[0051] The thermostat and remote control apparatus **10** can be charged both with the cradle **150** or from a charger unit using a standard electrical outlet (not shown). A barcode scanner or OCR document scanner can also be connected to the thermostat and remote control apparatus **10** via one of the serial/parallel ports **170**, **171** or **180**.

[0052] The cradle **150** allows a user to utilize the thermostat and remote control apparatus **10** while it is being charged. This can occur since the infrared transmitter **190** and receiver **200** are openly exposed through the open side of the cradle **150**, and allow for infrared interactions. An antenna **210** is also openly exposed as well to allow for radio frequency (RF) reception and transmission.

[0053] The cradle **150** contains a charging power supply and capability to read and write data into a memory media **152** stored in the cradle **150**. Read and write communication is transferred through connection(s) provided by serial/parallel ports **170**, **171**, or **180** to the cradle **150** while the thermostat and remote control apparatus **10** is connected.

[0054] One implementation of auxiliary memory may include read-only memory (ROM), a read and write floppy disk drive **154**, memory stick port (not shown), a read and write CD drive **155** and random access memory (RAM). This will require a microcontroller **300** (see **FIGS. 5 and 6**) for the purpose of interfacing the thermostat and remote control apparatus **10** with the memory media **152** in the cradle **150**. The thermostat and remote control apparatus **10** may store data in the memory media **152** or upload data from the auxiliary memory. The telephone hookup **407** to the cradle **150** could also be implemented, and the microcontroller **300** could control the charger **418** (see **FIGS. 5 and 6** as well).

[0055] **FIG. 4** depicts the thermostat and remote control apparatus **10** and its various components. There is a transmitting means for transmitting a signal to an entertainment center **220** and household appliance(s) **230**, which utilize infrared technology. The entertainment center **220** and household appliances **230** must be provided with an infrared signal transmitter (not shown) and receiver (not shown) to correspond and communicate with the infrared transmitter **190** and receiver **200** (see **FIG. 3**) of the thermostat and remote control apparatus **10**.

[0056] The thermostat and remote control apparatus **10** also utilizes radio frequency technology. A transmitting means for transmitting a signal to a temperature sensor **240**, an X-10 device **250**, a thermostat **260**, surveillance equipment **270** and entertainment center **220**, are provided, which utilize radio frequency technology (RF).

[0057] The temperature sensor **240**, the appliance **230**, X-10 device **250**, thermostat **260**, entertainment center **220** and surveillance equipment **270** must be provided with an RF transmitter and receiver (not shown) to correspond and communicate with the RF transmitter **280** (**FIG. 6**) and receiver **290** (**FIG. 6**) of the thermostat and remote control apparatus **10**. The thermostat **260** and temperature probe **265** are the controlling devices for a user's heating and air conditioning equipment, which are typically powered by electricity and natural gas. A temperature sensor **240** may be used to sense temperature in a remote location.

[0058] The thermostat and remote control apparatus **10** can communicate, via radio frequency, to additional thermostat and remote control apparatuses **10**. The thermostat and remote control apparatus **10** also has the capability to communicate through the frequency spectrum via cell tele-

phone, satellite communication, the GPS system, weather radio, radio time update and local RF intercommunication radio frequencies.

[0059] There is also two-way communication between the thermostat and remote control apparatuses **10** and other control devices, via RF, infrared and ultrasonic technology. The thermostat and remote control apparatus **10** can provide the status of the controlled and monitored device, as well as the temperature, the time, and the on/off activation switches for the HVAC.

[0060] **FIG. 5** depicts an overview of the infrared technology used by the thermostat and remote control apparatus **10**. A powerful microcontroller **300** is at the heart of the use of the infrared technology. The microcontroller **300** is also provided with programmable memory (such as RAM, PROM and flash PROM) as well as prepackaged software (not shown) that runs the hardware and other components of the thermostat and remote control apparatus **10**. This software is known to those skilled in the related art.

[0061] The infrared receiver **290** receives an infrared signal and runs the signal to a serial to parallel converter **320** before sending the signal to the microcontroller **300**. The infrared transmitter **280** uses a parallel to serial converter **310** before sending information from the microcontroller **300**. Information is input into the microcontroller **300** from a touchpad **330** and is displayed on a liquid crystal diode (LCD) display **340** of the interface **15**.

[0062] Similarly, the microcontroller **300** sends a signal to a parallel to serial converter **310** to a light emitting diode (LED) transmitter **350**, which sends a signal to the entertainment center **220**. The entertainment center **220** then sends a signal back to the LED receiver **360**, which send a signal to a serial to parallel converter **320**, which then sends a signal to the microcontroller **300**. The microcontroller **300** is also directly linked to a USB port **170** and a RS-232 port **180**. The microcontroller **300** may also be reprogrammed via USB port **170** or RS 232 port **180**.

[0063] A speaker **417**, a microphone **416**, a telephone jack **407** and a camera **415** interface directly with the microcontroller **300** via appropriate interfaces. The thermostat and remote control apparatus **10** also has the capability of visual or audio surveillance of other remote units or dedicated surveillance units or devices. A chargeable battery pack **413** connects to the microcontroller **300**, parallel to serial converter **310**, LED transmitter **350**, serial to parallel converter **320**, RF receiver detector **290**, parallel to serial converter **311**, and RF transmitter modulator **280**. There is also a headset jack **412** to interface with the microcontroller **300** as well.

[0064] Digital communication to external devices may be conveyed through a serial/parallel port such as **170** or **171**, and also telephone port **407**, RF antenna **408** and IR transmitter **190** and receiver **200**. All of these interfaces allow communications to external key boards and monitors, surveillance apparatus, automobile controls and monitors, household controls and monitors, various controlled and monitoring devices, memory storage devices, telephones, and interfacing to multiple communication and digital media devices (shown in **FIG. 4**). There are also other interfaces for a headset jack **412**, speaker **417**, microphone **416** and camera **415** used for enhanced communication.

[0065] The camera **415** and microphone **416** can be used with a LCD display **340** for videophone and other multimedia applications. All ports are on the thermostat and remote control apparatus **10**. The thermostat and remote apparatus **10** may run programs and games like those designed for a personal computer or laptop computer. It can perform control and monitoring functions. It can allow viewing on an external monitor or input from an external keyboard. The keyboard media could be like those on a common personal computer or can be uniquely designed to interface with the thermostat and remote control apparatus **10** (Plugged into keyboard). A computerized device's storage media may also be utilized by the thermostat and remote control apparatus **10**.

[0066] There is, of course, software internally of apparatus **10** which provides the interface between control, communications and software functions, and the LCD display, touch screen and I/O port data. The software also allows the apparatus **10** to accept and process the various I/O stimuli received for controlling, monitoring and processing information. As desired, the software can provide the necessary interface for running popular PC programs, games and communication(s) software.

[0067] Further with reference to **FIG. 4**, parallel busport **172** is recessed into the body of apparatus **10**; a blank is installed here if an add-on module is not installed. Such add-on modules can add such features as, without limitation, expanded memory, program memory (e.g., preinstalled specific programs or reserved for the storage of programs), co-processor, other storage media, etc.

[0068] A chargeable battery pack **413** may be charged from an external circuit such as cradle **150** or separate charger **418**. The chargeable battery pack **413** may be trickle charged using a v-bus of a USB port **170**, if so dedicated, connected to an external port or a built in microphone **416** when in idle mode. It could charge off of rectified power generated by background noise. When not in idle mode, the built in microphone **416** would perform as a normal microphone. The thermostat and remote control apparatus **10** has voice activation and voice recognition capabilities via voice activation software, which is well-known to those schooled in the related art.

[0069] There is a miniature version (not shown) of the thermostat and remote control apparatus **10** that is designed for children and that is made up of some of the basic components with equal or slightly less control capability. There are also some programming differences, with the miniature version having fewer control functions and having a focus on a polling wrist band for locating and tracking children as part of a GPS system, time and date information, an alarm, and games. A stealth mode can be programmed not to trigger an alarm when the chosen GPS system acquires a location of a particular transmitter (not shown). Such a system is discussed in detail hereinbelow, with reference to **FIGS. 8 and 9**.

[0070] The use of RF technology is similarly used and outlined in **FIG. 6**. An RF receiver **290** receives a RF signal and sends a signal to a serial to parallel converter **320**, which is then sent to a microcontroller **300**. The microcontroller **300** then sends a signal to the LCD display **340**. A user then enters desired information from a touchpad **330**, which is sent to the microcontroller **300**, which is sent to a parallel to serial converter **310** and eventually to a RF transmitter **280**.

[0071] A temperature probe **265** also sends a signal to an analog to digital temperature converter **370**, which sends a signal to the microcontroller **300**. The microcontroller **300** then sends a signal to the fan control, air conditioning control and heat control of the thermostat **260**. An X-10 **250** adapter is also in direct contact with the microcontroller **300**, which can communicate and be powered by a standard wall outlet. The microcontroller **300** will lay dormant when not in use and can be reactivated by pressing the program/enter key **130** (**FIG. 2**).

[0072] The additional remote antenna connector **408** may be used to communicate with remote devices such as a microwave dish or other RF media. Remote antennae connector **408** interfaces with the RF receiver detector **290** and the RF transmitter modulator **280**. A speaker **417**, a microphone **416**, a camera **415** and external jacks may also be connected to the microcontroller **300** via applicable interfaces. Charger **418** and chargeable battery pack **413** are interconnected between the microcontroller **300**, receiver detector **290**, transmitter modulator **280**, LCD display **340**, serial to parallel converter **320** and parallel to serial converter **310**. A telephone jack **407** is connected to the telephone interface module **406**, which interfaces the microcontroller **300**.

[0073] The thermostat and remote control apparatus **10** does not need to utilize a personal computer because of the powerful microcontroller **300** incorporated with the thermostat and remote control apparatus **10**. Two-way communication exists between the thermostat and remote control apparatus **10** and the thermostat **260**. Date, time and thermostat settings are updated from the thermostat **260** to the thermostat and remote control apparatus **10** periodically

[0074] The thermostat **260** has "Transmit" and "Receive" indicators that show the communication states of the thermostat and remote control apparatus **10**. There is a built-in clock on the thermostat and remote control apparatus **10** that is synchronized to the thermostat **260**. The thermostat and remote control apparatus **10** also has "Program\Enter" button **130** that allows a user to enter and activate a setting on the touchpad **330** display such as temperature settings to the thermostat **260**.

[0075] The thermostat and remote control apparatus **10** has HVAC power and diagnosis equipment that utilizes parameters such as refrigerant pressure differential and the time involved with a specific temperature change. The HVAC power and diagnosis equipment also monitors and controls the air flow control and monitoring of individual spaces and humidity.

[0076] The thermostat and remote control apparatus **10** can also be connected to a digital port for a computerized device for viewing. The thermostat and remote control apparatus **10** also has a roll-over communication capability and equipment **440** where if one form of communication is not available, other available communications devices can be utilized.

[0077] The thermostat and remote control apparatus **10** further comprises health surveillance, controlling and monitoring via suitable equipment. If a physical condition merits attention, a designated caretaker can automatically be summoned. The health surveillance equipment can also be polled to monitor a user's breathing, blood pressure, pulse or breathing and respiration rate.

[0078] The thermostat and remote control apparatus **10** can also be connected to pet surveillance, controlling and monitoring equipment.

[0079] The thermostat and remote control apparatus **10** can be tied into household security, or stand and act alone, to determine status, also to open arid close windows, lock and unlock doors, open and close drapes and vents, and turn lights on and off on a fixed or random schedule. Property control equipment can be tied into yard and greenhouse diagnosis, supervision and maintenance as well. An vehicle such as an automobile can even be started and warmed up using automobile control equipment. Furthermore, apparatus **10** can be configured to lock and unlock vehicle doors and to monitor the location of the vehicle.

[0080] The thermostat and remote control apparatus **10** is capable of logging into other computers, such as a mainframe office computer for access to various files, for reading, maintaining and updating. Also, the apparatus **10** could be configured for teleconferencing via appropriate communications, and alone or together with TV and radio audio-visual communication.

[0081] The invention can be employed effectively in contamination and decontamination control and monitoring of air and drinking water. Environmental air (e.g., in a building, shopping mall, etc.) can be monitored for contamination with pollutants such as natural gas, carbon monoxide, radon, etc. or viruses or bacteria that can be cleaned and filtered from the air. Drinking water contaminated or polluted can be chemically treated to eliminate pollutants. All can be monitored and controlled from the apparatus **10**, with messages left or e-mailed to a supervisor. Further, personnel can be alerted to control any such situation. Of course, suitable monitoring and controlling hardware with appropriate communications would be present and controlled from apparatus **10**.

[0082] In a similar vein, swimming pool water levels, temperature, chlorine level and presence of any contamination can be remotely monitored and controlled from apparatus **10**. Sweepers and pumps can be controlled. Supervisors can be summoned for emergencies. Again, suitable hardware and appropriate communications would be present and controlled form apparatus **10**.

[0083] With reference now to the mainly diagrammatic view of **FIG. 7**, the microprocessor **300** (see **FIG. 5** or **6**) of apparatus **10** can be connected via bus **530** to the Internet, and a separate server computer **500** with processor **510** and main memory **520** which includes an area for executing program code under the direction of the processor **510**, and a storage device **540** for storing data and program code. Also, a web-based thermostat and remote control computer code is stored in the storage device **540**, and executes in main memory **520** under the direction of processor **510**. Connection (not shown) to the apparatus **10** may be accomplished in any one of a variety of ways, including conventional telephone, cell and RF.

[0084] The miniaturized version of the apparatus referred to above will now be discussed in detail. The extended surveillance function(s) of the invention are numerous, but one very practical example is found in the children's watch embodiment shown in **FIGS. 8 and 9**. The principal function of the watch embodiment is monitoring the location of

the child wearing the watch. Other important functions include an ability for 911 emergency communications, visual/audio intercommunication, and sending and receiving messages, as by e-mail, for example.

[**0085**] Turning now to **FIG. 8**, the external configuration of the remote control apparatus in the form of a child's watch **600** will be discussed. The rendition of **FIG. 8** is intended to show the various functions and controls of the device, rather than illustrate what the product itself might look like. In any event, there is a central LCD display **610**, speaker **612** and microphone **614** grills, a light sensor **616** for sensing ambient light and activating backlighting for LCD display **610** when light levels are below a predetermined threshhold, an on-off switch **618** (which could be recessed to prevent accidental unintended operation), a charger and external power port **620**, and a camera **622**. RF (for example) communication may occur via an external antenna mounted in an external antenna port **624**. Alternatively, watch **600** may have a built-in antenna (not shown). A USB port is provided at **626** for the uploading and downloading of programs required for proper use of the watch.

[**0086**] The internal components of watch **600** are diagrammatically illustrated in **FIG. 9**. As can be appreciated from a comparison of this view with **FIG. 6**, the internals are pretty much the same, but reduced in number to suit the desired functions of watch **600**.

[**0087**] An RF receiver **290** receives a RF signal and sends a signal to a serial to parallel converter **320**, which is then sent to a microcontroller **300**. The microcontroller **300** then sends a signal to the LCD display **340**. A user can enter desired information from a touchpad **330**, which is sent to the microcontroller **300**, which is sent to a parallel to serial converter **311** and eventually to a RF transmitter **280**.

[**0088**] The additional remote antenna connector **408** may be used to communicate with a base device **10**. Remote antennae connector **408** interfaces with the RF receiver detector **290** and the RF transmitter modulator **280**. A speaker **417**, a microphone **416**, a camera **415** and a headset jack **412** may also be connected to the microcontroller **300** via applicable interfaces. Charger **418** and chargeable battery pack **413** are interconnected between the microcontroller **300**, receiver detector **290**, transmitter modulator **280**, LCD display **340**, serial to parallel converter **320** and parallel to serial converter **311**. A power level sensor **414** may be provided, with appropriate LCD readout or alarm for the user (not shown). A GPS device **700** may be internal of the unit, or attached separately. Uploading or downloading of data or software may be done through USB port **170**, and plug-in modules (e.g., GPS device **700**) amy attach at bus port **172**.

[**0089**] The specific components and methodology for locating the wrist watch **600** may vary depending on current technology, reliability of components and methodology selected, and cost. One way to locate watch or apparatus **600** is to employ the GPS device **700**; once activated and ready (a few minutes time, ordinarily), the device **700** will provide constant latitude/longitude coordinates (and altitude, if at least four satellites of the current GPS system are located and utilized by the GPS device **700**). This data can then be transmitted from watch **600** back to the base apparatus **10**; the transmission can be intermittent or continuous, of course. GPS device **700** can be built in to watch **600** or plugged in through one of the USB ports, such as **170**, **171**, or **180**.

[**0090**] Another method that could be employed is the use of cell phone towers or other land based beacons and triangulation circuitry (not shown) to locate the device for the user and, if desired, also transmit the determined location back to a base unit **10**. Or, based on FCC requirement on E911 mandate, a public safety answering point system can interrogate a cell phone signal (sent by unit **600**—not shown) and determine the location of unit **600**. Call phone and GPS technology can be employed together to locate the unit **600**, particularly in multiterrain locations.

[**0091**] In any event, a position location device can be employed in or on the unit **600** and polled remotely, electronically, to locate where the wearer (for example, a child, a pet, an elderly person, etc.) of unit **600** is at any chosen time. Additionally, the device, if stolen, could be easily located and the police dispatched to retrieve the unit **600**.

[**0092**] It is to be understood that the present invention is not limited to the various embodiments described above, but encompasses any and all embodiments within the scope of the following claims.

We claim:

1. A thermostat and remote control apparatus, comprising:

a housing;

an interface disposed in said housing;

a plurality of icons on the interface, which correspond to a set of controls for items that are controlled by the apparatus;

a display screen, which indicates the current temperature setting, time and date;

a recessed program and enter button that allows a user to enter temperature settings to a thermostat;

a clear button for deleting any entered information;

an electric cradle that is used to recharge the apparatus;

a (USB) port and a plurality of serial/parallel ports that are used to connect a computerized device to the apparatus;

an RS-232 port to standardize a transmission of serial data between any devices and the apparatus;

a microcontroller for processing information and data;

a serial to parallel converter and a parallel to serial converter; and

a transmitting means for transmitting a signal to and from an item that can be controlled by the apparatus.

2. The apparatus according to claim 1, further comprising an entertainment center, and wherein the item controlled by the apparatus is said entertainment center.

3. The apparatus according to claim 1, further comprising a thermostat and HVAC system, and wherein the item controlled and monitored by the apparatus is said thermostat and HVAC system.

4. The apparatus according to claim 1, further comprising household appliances, and wherein items controlled by the apparatus are said household appliances.

5. The apparatus according to claim 1, further comprising devices with an X-10 protocol, and wherein items controlled by the apparatus are said devices with an X-10 protocol.

6. The apparatus according to claim 1, further comprising a security system, and wherein the item controlled by the apparatus is said security system.

7. The apparatus according to claim 6, said security system arranged and configured to open and close windows, lock and unlock doors and windows, open and close drapes and vents, and turn lights on and off on a fixed or random schedule.

8. The apparatus according to claim 1, further comprising a global positioning locator device.

9. The apparatus according to claim 7, wherein said global positioning satellite device further comprises a programmed stealth alarm mode.

10. The apparatus according to claim 1, further comprising an OCR document scanner, and wherein the item controlled by the apparatus is said OCR document scanner.

11. The apparatus according to claim 1, wherein said electric cradle further comprises a memory media for storage.

12. The apparatus according to claim 1, wherein said electric cradle has a battery charger and chargeable battery pack.

13. The apparatus according to claim 1, wherein the apparatus is capable of communicating with a second thermostat and remote control apparatus.

14. The apparatus according to claim 13, wherein said apparatus has two-way communication capability with the second thermostat and remote control apparatuses.

15. The apparatus according to claim 1, wherein said microcontroller is connected to a speaker, a microphone, a camera and a plurality of external jacks.

16. The apparatus according to claim 1, wherein the apparatus is configured to have the capability to communicate through the frequency spectrum via a cell telephone, a satellite communication, a global positioning system, a weather radio, WWV time update and local RF intercommunication.

17. The apparatus according to claim 1, wherein a computerized device is connected to a USB port for viewing, keyboard capability and storage media utilization.

18. The apparatus according to claim 1, wherein said apparatus further comprises a built-in timer and clock.

19. The apparatus according to claim 1, wherein said apparatus further comprises voice activated and recognition software.

20. The apparatus according to claim 1, wherein said transmitting means for transmitting information to and from an item comprises an infrared transmitter and receiver.

21. The apparatus according to claim 1, wherein said transmitting means for transmitting information to and from an item comprises a radio frequency transmitter and receiver.

22. The apparatus according to claim 1, arranged and configured such that roll-over communication capability exists between said transmitting means.

23. The apparatus according to claim 1, wherein said apparatus is connected to a digital port for viewing.

24. The apparatus according to claim 1, further comprising health surveillance and monitoring equipment.

25. The apparatus according to claim 23, wherein said health surveillance and monitoring equipment is configured to poll a patient's condition.

26. The apparatus according to claim 1, further comprising pet surveillance and monitoring equipment.

27. The apparatus according to claim 1, further comprising yard and greenhouse diagnosis, surveillance, supervision and maintenance equipment.

28. The apparatus according to claim 1, further comprising vehicle engine start-up and warming equipment.

29. The apparatus according to claim 28, further comprising the configuration of said remote control apparatus to lock and unlock vehicle doors and to monitor the location of the vehicle.

30. The apparatus according to claim 1, further comprising predetermined and configured additional said remote control units that are arranged and configured to communicate, program, control, monitor and download data and/or programs to one another using one or more of IR, RF, cell, satellite or telephone communication means.

31. The apparatus according to claim 1, further comprising a touch screen and at least one I/O port, said display being an LCD display, and software means internally of the remote control apparatus for controlling, monitoring and processing information and providing an interface for running additional programs, games and communication(s) software.

32. The apparatus according to claim 31, further comprising a parallel bus port for insertion of add-on modules, said bus port being recessed into said remote control apparatus.

33. The apparatus according to claim 1, further comprising means for accessing one or more other computers from said remote control apparatus, for accessing files for reading, maintaining and updating.

34. The apparatus according to claim 1, further comprising, means for TV and/or radio audio-visual communications from said remote control unit.

35. The apparatus according to claim 1, further comprising means for teleconferencing from said remote control unit.

36. The apparatus according to claim 1, further comprising means for monitoring and controlling water and/or air contamination and decontamination.

37. The apparatus according to claim 1, further comprising means for monitoring and controlling one or more of swimming pool water levels, temperature, PH and temperature.

38. A thermostat and remote control system, comprising:

(a) at least: one server computer having a processor, an area of main memory for executing program code under the direction of the processor, a storage device for storing data and program code, and a bus connecting the processor main memory and the storage device;

(b) at least one relational database on said storage device;

(c) a data communications device connected to said bus for connecting said server computer to the Internet; and

(d) a web-based thermostat and remote control computer code stored in said storage device and executing in said main memory under the direction of said processor, the

computer program including means for running and controlling the hardware of the thermostat and remote control apparatus.

39. A controlled remote control apparatus, comprising:

a housing;

an interface disposed in said housing;

a plurality of icons on the interface, which correspond to a set of controls for items that are controlled by the apparatus;

a display screen;

a clear button for deleting any entered information;

a (USB) port for the uploading and downloading of predetermined software and data;

a microcontroller for processing information and data;

a serial to parallel converter, and a parallel to serial converter; and

a transmitting means for transmitting a signal to and from an item that can control the apparatus.

40. The apparatus according to claim 39, further comprising a thermostat and remote control apparatus, which comprises:

a housing;

an interface disposed in said housing;

a plurality of icons on the interface, which correspond to a set of controls for items that are controlled by the apparatus;

a display screen, which indicates the current temperature setting, time and date;

a recessed program and enter button that allows a user to enter temperature settings to a thermostat;

a clear button for deleting any entered information;

an electric cradle that is used to recharge the apparatus;

a (USB) port and a plurality of serial/parallel ports that are used to connect a computerized device to the apparatus;

an RS-232 port to standardize a transmission of serial data between any devices and the apparatus;

a microcontroller for processing information and data;

a serial to parallel converter and a parallel to serial converter; and

a transmitting means for transmitting a signal to and from said controlled remote control apparatus.

* * * * *