US006318639B1

(12) **United States Patent**
Toth

(10) **Patent No.: US 6,318,639 B1**
(45) **Date of Patent: Nov. 20, 2001**

(54) **THERMOSTAT WITH TEMPORARY FAN ON FUNCTION**

(75) Inventor: **Bartholomew L. Toth**, St. Louis., MO (US)

(73) Assignee: **Emerson Electric Co.**, St. Louis, MO (US)

(*) Notice: Subject to any disclaimer, the term of this patent is extended or adjusted under 35 U.S.C. 154(b) by 0 days.

(21) Appl. No.: **09/418,714**

(22) Filed: **Oct. 15, 1999**

(51) **Int. Cl.**[7] **F23N 5/20**; F24F 7/00

(52) **U.S. Cl.** ..... **236/46 R**; 236/49.3; 62/231; 165/244

(58) **Field of Search** ..... 165/244, 238; 236/49.3, 46 R; 62/231; 454/233, 258

(56) **References Cited**

U.S. PATENT DOCUMENTS

3,635,044		1/1972	Heth	62/151
4,298,946		11/1981	Hartsell et al.	236/91 D
4,299,096		11/1981	Van Camp	62/180
4,838,482	*	6/1989	Vogelzang	165/244 X
5,000,382		3/1991	Stedman	236/46 R
5,230,482		7/1993	Ratz et al.	236/47 X
5,547,017	*	8/1996	Rudd	165/244
5,582,233		12/1996	Noto	165/247
5,611,484		3/1997	Uhrich	236/46 R
5,881,806	*	3/1999	Rudd	165/244

* cited by examiner

Primary Examiner—William Wayner
(74) *Attorney, Agent, or Firm*—Harness, Dickey & Pierce, P.L.C.

(57) **ABSTRACT**

An electronic programmable thermostat having different modes of fan operation, including an automatic mode, a time mode, and a continuous mode, preferably includes a temporary fan-on mode for selecting a predetermined period of time for enabling operation of a climate control system including an air circulating fan. The period of time for operation of the temporary fan on mode is selected from a plurality of predetermined periods of time. The temporary mode of operation preferably can be selected during any other mode of operation and after the expiration of the selected period of time for temporary fan on operation, the thermostat returns to the mode of operation of the fan that it should be in based on a programmed schedule of the thermostat. Selection of a predetermined period of time and activation of the temporary mode results in operation of the air circulating fan for that selected period of time.

20 Claims, 6 Drawing Sheets

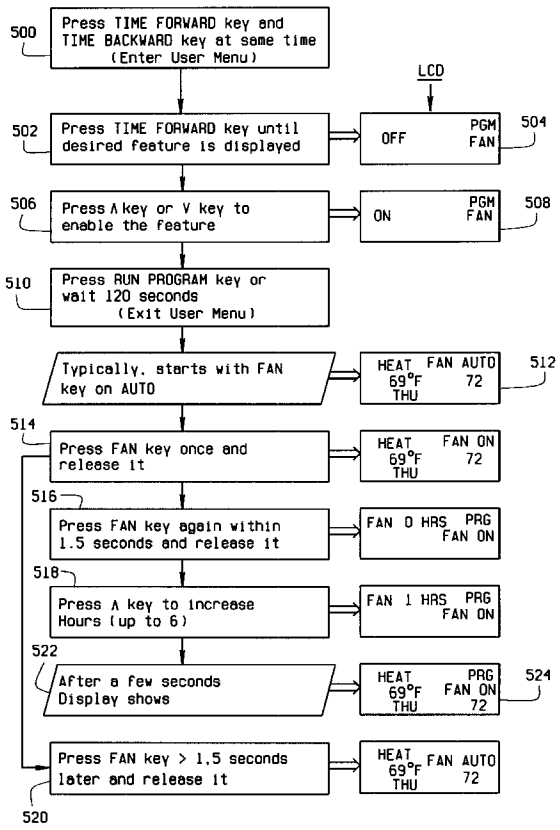

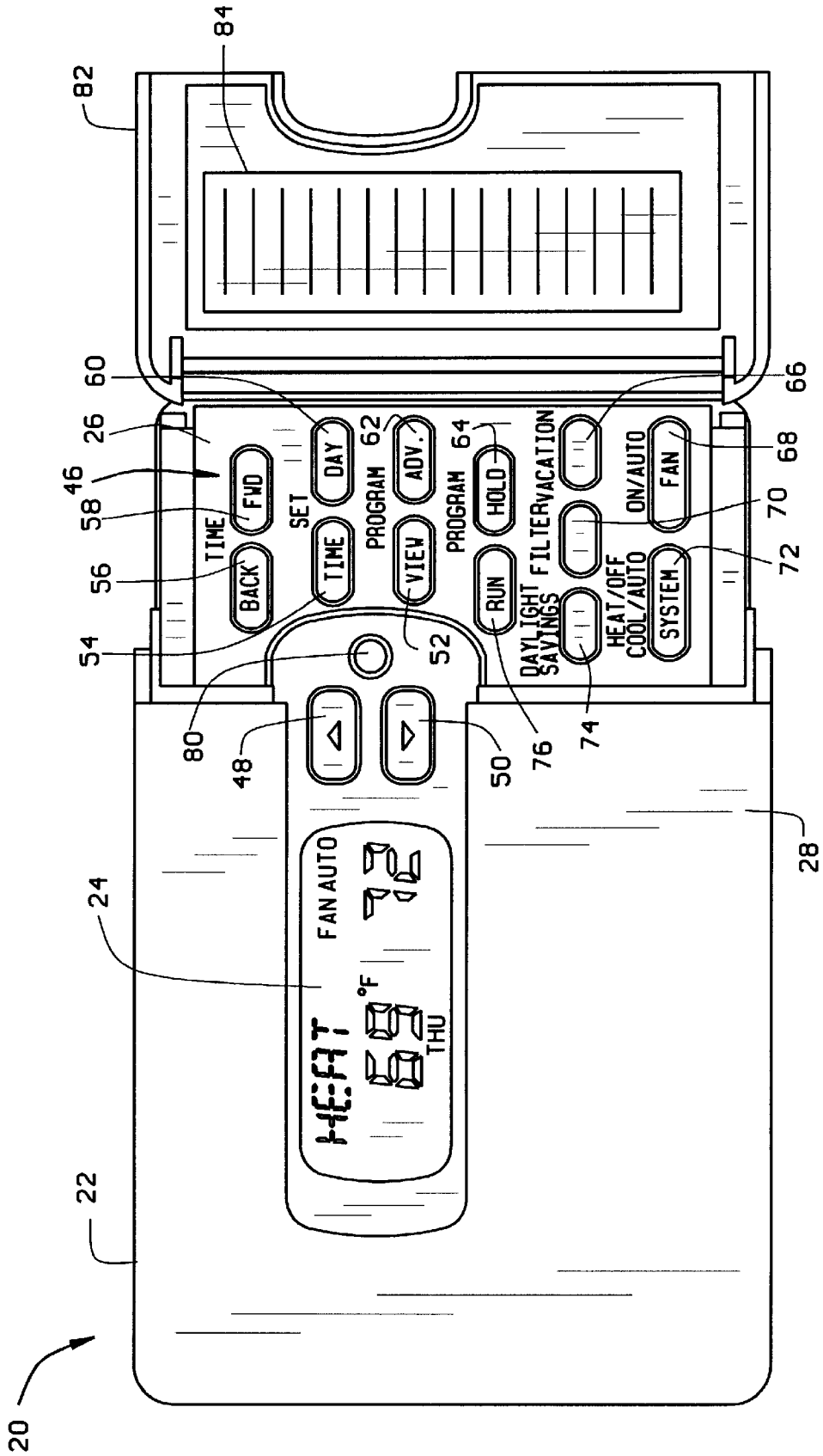
84
82
60
66
26
46
58
56
54
62
64
68
70
72
80
48
50
76
74
52
28
24
22
20
TIME
FWD
BACK
SET
DAY
TIME
PROGRAM
ADV.
VIEW
PROGRAM
HOLD
RUN
VACATION
FILTER
DAYLIGHT SAVINGS
ON/AUTO
FAN
HEAT/OFF COOL/AUTO
SYSTEM
FAN AUTO
°F
THU

FIG. 1

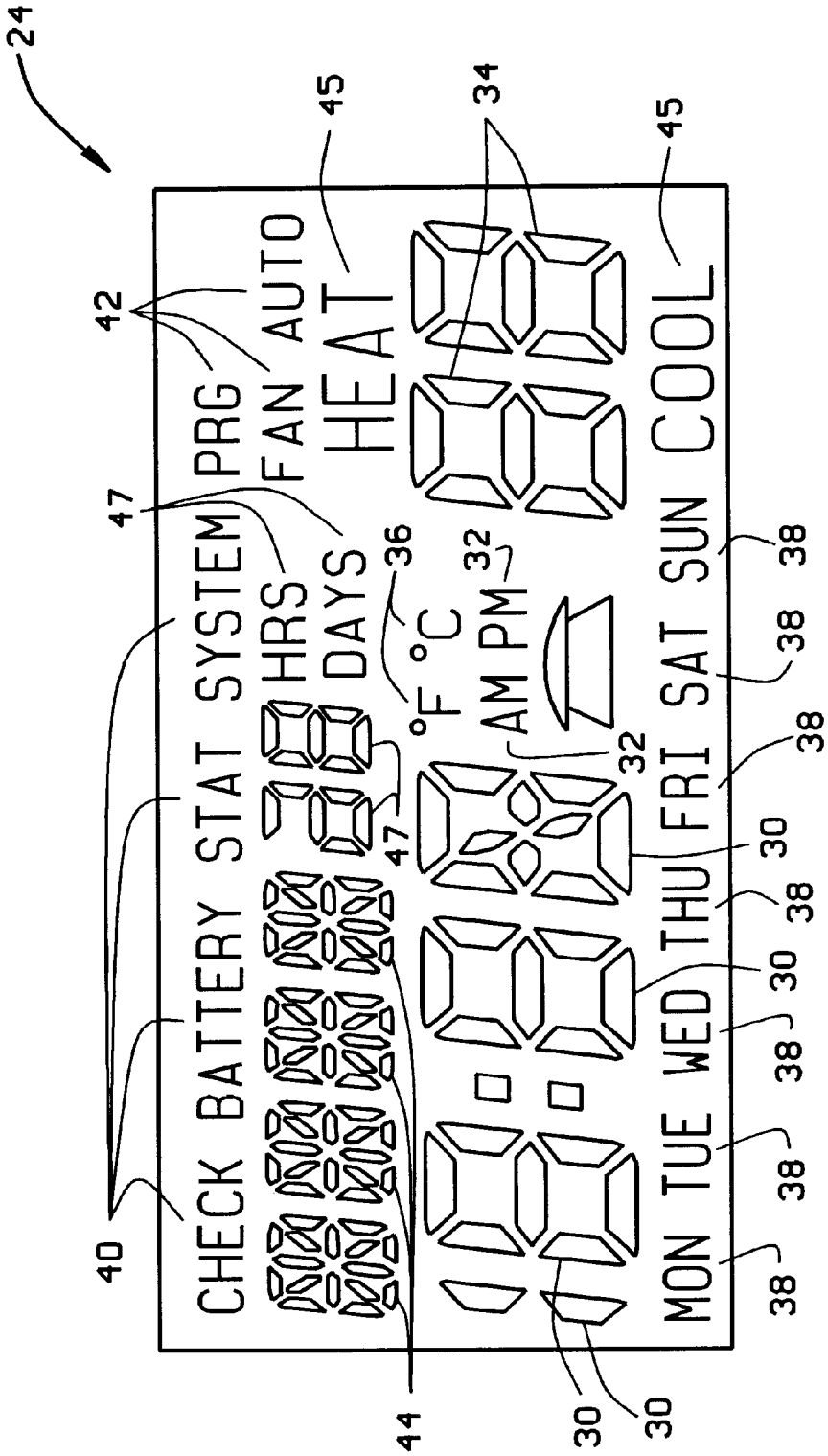
24
CHECK BATTERY STAT SYSTEM PRG
FAN AUTO
HEAT
COOL
HRS
DAYS
°F °C
AM PM
MON TUE WED THU FRI SAT SUN
40
42
44
45
47
36
32
34
30
38

FIG. 2

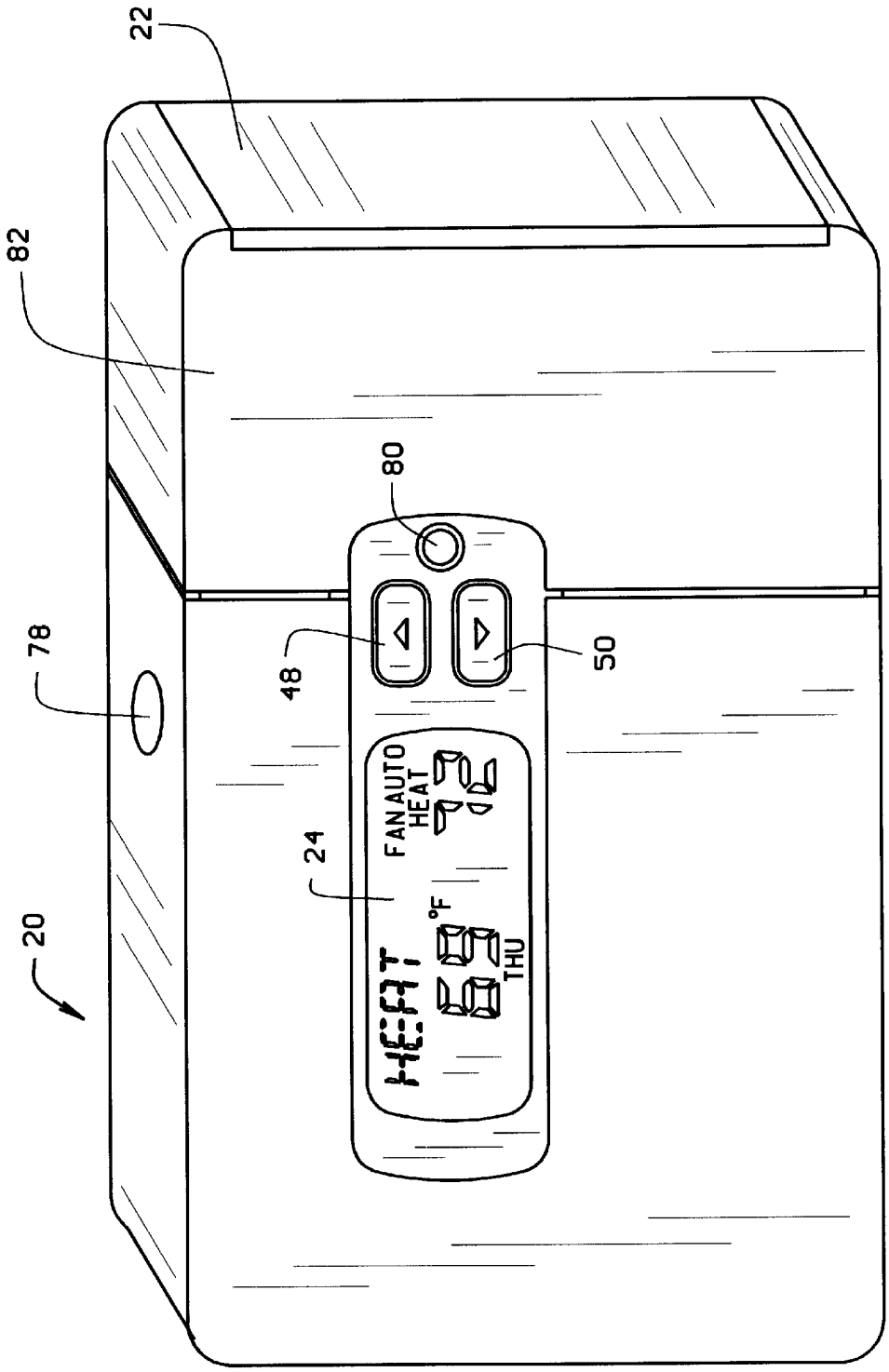

FIG. 3

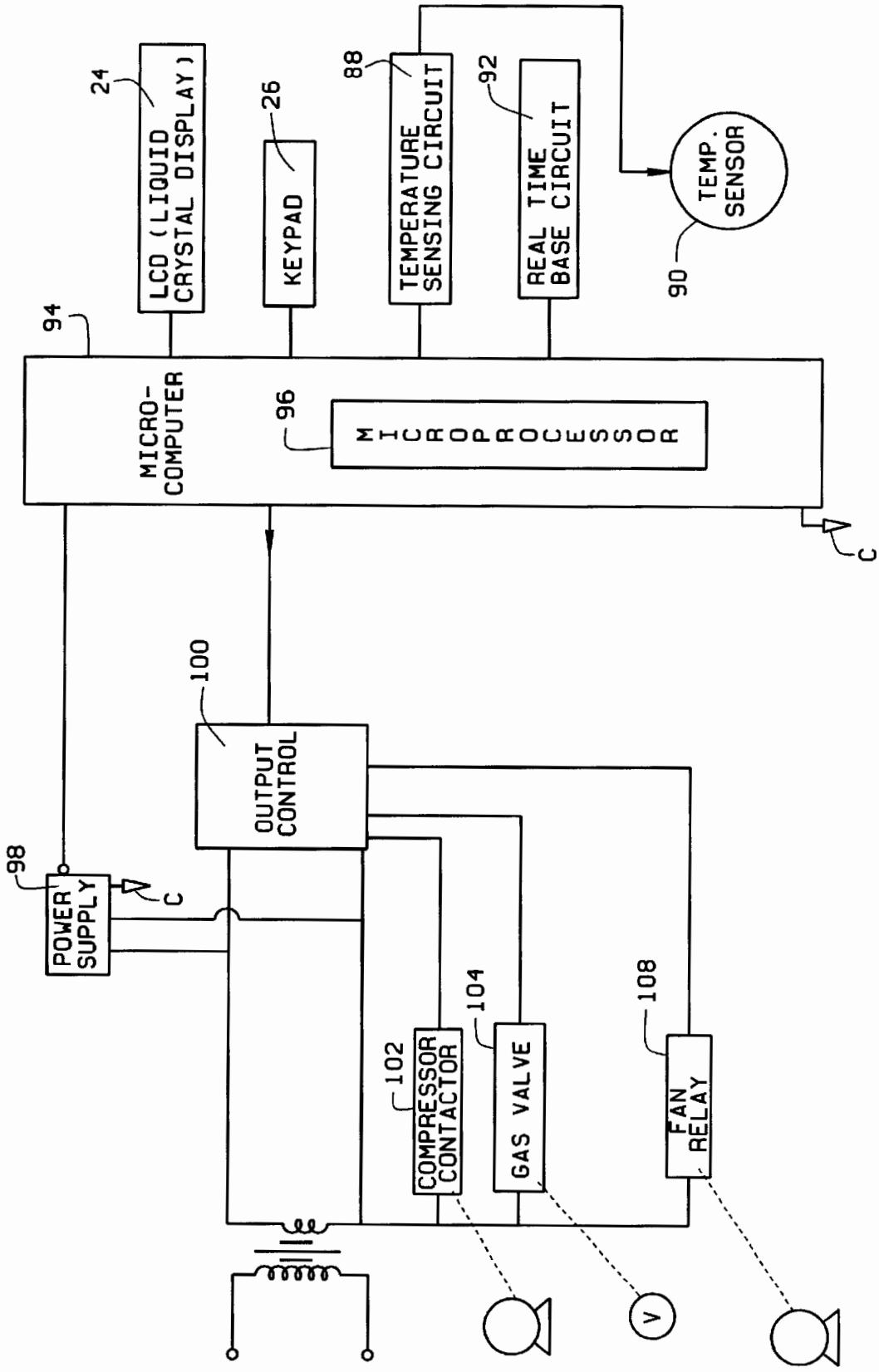
24
LCD (LIQUID CRYSTAL DISPLAY)
26
KEYPAD
88
TEMPERATURE SENSING CIRCUIT
92
REAL TIME BASE CIRCUIT
TEMP. SENSOR
90
94
MICRO-COMPUTER
96
MICROPROCESSOR
C
100
OUTPUT CONTROL
98
POWER SUPPLY
C
102
COMPRESSOR CONTACTOR
104
GAS VALVE
108
FAN RELAY
V

FIG. 4

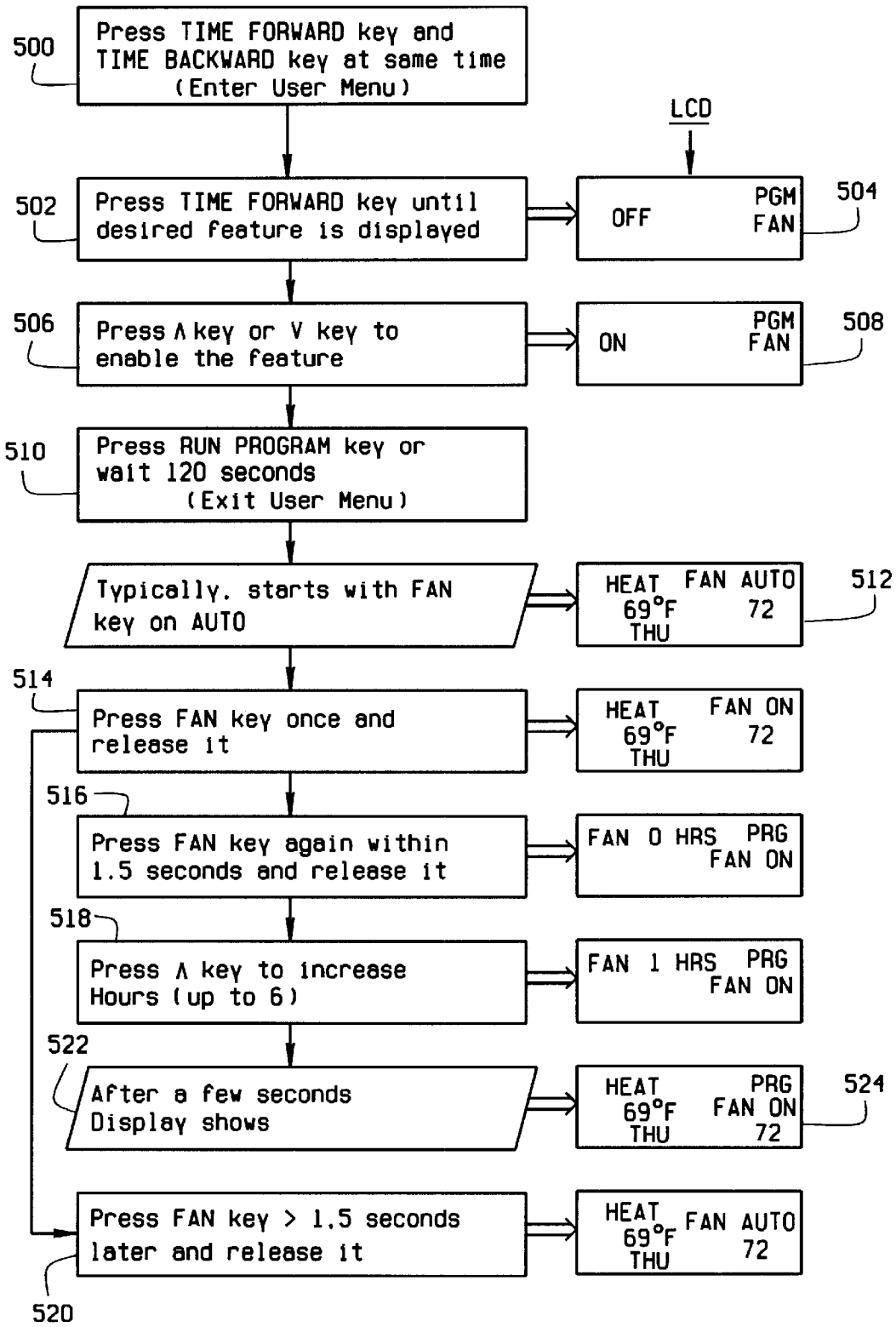
500
Press TIME FORWARD key and TIME BACKWARD key at same time (Enter User Menu)
LCD
502
Press TIME FORWARD key until desired feature is displayed
OFF
PGM FAN
504
506
Press ∧ key or V key to enable the feature
ON
PGM FAN
508
510
Press RUN PROGRAM key or wait 120 seconds (Exit User Menu)
Typically, starts with FAN key on AUTO
HEAT FAN AUTO
69°F 72
THU
512
514
Press FAN key once and release it
HEAT FAN ON
69°F 72
THU
516
Press FAN key again within 1.5 seconds and release it
FAN 0 HRS PRG
FAN ON
518
Press ∧ key to increase Hours (up to 6)
FAN 1 HRS PRG
FAN ON
522
After a few seconds Display shows
HEAT PRG
69°F FAN ON
THU 72
524
Press FAN key > 1.5 seconds later and release it
HEAT FAN AUTO
69°F 72
THU
520

FIG. 5

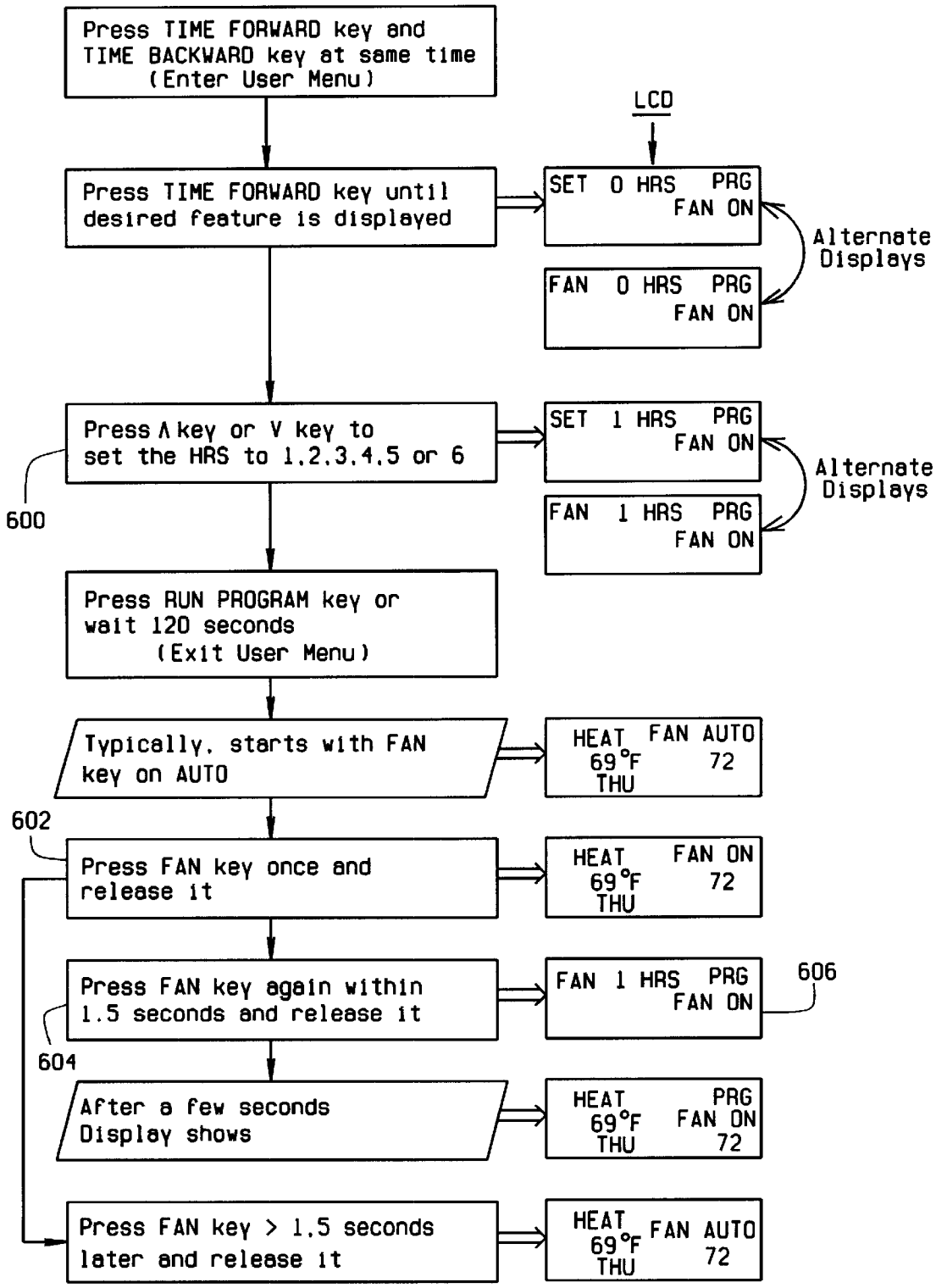
Press TIME FORWARD key and TIME BACKWARD key at same time (Enter User Menu)
LCD
Press TIME FORWARD key until desired feature is displayed
SET 0 HRS PRG FAN ON
FAN 0 HRS PRG FAN ON
Alternate Displays
Press Λ key or V key to set the HRS to 1,2,3,4,5 or 6
SET 1 HRS PRG FAN ON
FAN 1 HRS PRG FAN ON
Alternate Displays
600
Press RUN PROGRAM key or wait 120 seconds (Exit User Menu)
Typically, starts with FAN key on AUTO
HEAT FAN AUTO 69°F 72 THU
602
Press FAN key once and release it
HEAT FAN ON 69°F 72 THU
Press FAN key again within 1.5 seconds and release it
FAN 1 HRS PRG FAN ON
606
604
After a few seconds Display shows
HEAT PRG 69°F FAN ON THU 72
Press FAN key > 1.5 seconds later and release it
HEAT FAN AUTO 69°F 72 THU

FIG. 6

THERMOSTAT WITH TEMPORARY FAN ON FUNCTION

FIELD OF THE INVENTION

The present invention relates to thermostats, and in particular, to electronic programmable thermostats having different modes of operation for enabling operation of a climate control system including an air-circulating fan.

BACKGROUND OF THE INVENTION

Electronic digital thermostats typically have one or more programmable modes of fan operation. These modes may include an automatic mode based on temperature-related demands or requirements of the heating/cooling system, a time mode based on the time of day and a continuous mode for continuous operation. These thermostats commonly include user interfaces or programming pads for selecting among the available modes of operation.

A variety of thermostats, including ones with multiple modes of operation, are known in the art for controlling heating/cooling systems and air circulation systems. However, none of the previously available thermostats gave the user the option to turn the fan on, upon demand, for a preselected period.

The ability to turn the fan on and make it operate continuously for a preselected period, regardless of temperature or time, would give the user improved control over the environment. The user could ensure that the fan adequately ventilates the room, independent of temperature and time, and the user need not remain to turn the fan off.

What has been needed is a thermostat with an easily selected mode to operate the fan upon demand for a preselected period (and preferably one of a plurality of preselected periods).

SUMMARY OF THE INVENTION

The thermostat of the present invention provides a temporary fan-on mode of operation. The temporary fan-on mode allows the user to select one of a plurality of preselected periods to operate the fan. The fan will turn on upon demand by the user, will run for the preselected period regardless of the temperature or time, and will turn off without intervention by the user.

According to one aspect of the present invention, an improved thermostat is provided for controlling the operation of a climate control system including an air-circulating fan. The thermostat provides at least one of the following user-selectable modes of operating the fan: an automatic mode in which the air-circulating fan is operated based on temperature-related demands of the heating/cooling system; a time mode in which the air-circulating fan is operated based on the time of day; and a continuous mode in which the air-circulating fan is operated continuously. The improvement to the thermostat is a user-selectable temporary fan-on mode of operating the air-circulating fan in which the air-circulating fan is operated upon demand for a preselected period of time. The period of time for operation of the temporary fan-on mode is selectable from a plurality of predetermined periods of time. The temporary fan-on mode of operation preferably can be selected during any other mode of operation and after the expiration of the preselected period of time for temporary fan-on operation, the thermostat returns to the mode of operation of the fan that it should be in based on the programmed schedule of the thermostat.

According to another aspect of the present invention, a thermostat for controlling the operation of a climate control system including an air-circulating fan is provided with a temporary fan-on mode of operation for selectively operating the air circulating fan for a preselected period of time. The temporary fan-on mode is provided in addition to at least one of the following other user-selectable modes of operation: an automatic mode in which the air circulating fan is operated based on temperature-related demands of the heating/cooling system; a time mode in which the air-circulating fan is operated based on the time of day; and a continuous mode in which the air-circulating fans is operated continuously. The time period for the temporary fan-on mode is selected from a plurality of predetermined periods of time. In this aspect, the thermostat preferably includes a control for selecting the temporary fan on mode of operation and a control for preselecting the period of time. The control for preselecting the period of time is a control for preselecting one of a plurality of predetermined periods of time and the control for preselecting the period of time is activated upon operation of the control for selecting the temporary fan-on mode. The control for preselecting one of a plurality of predetermined periods of time scrolls through a series of pre-determined periods of time. The temporary fan-on mode of operation preferably may be selected during any other mode of operation. Additionally, after expiration of the preselected period of time, the thermostat preferably returns to the mode of operation of the fan that it should be in based on the programmed schedule of the thermostat.

According to still another aspect of the present invention, a method is provided for controlling a climate control system that includes an air-circulating fan in which the fan is operated in at least one of an automatic mode wherein the fan is operated based on temperature-related demands of the heating/cooling system; a time mode wherein the fan is operated based on the time of day; and a continuous mode wherein the fan is operated continuously. The method comprises the step of selectively operating the fan in a temporary fan-on mode, with the fan operating for a preselected period of time during the temporary fan-on mode. A further step includes, after expiration of the preselected time, returning the thermostat to the mode of operation of the fan that it should be in based on the programmed schedule of the thermostat. The step of selectively operating the fan in a temporary fan-on mode preferably includes the steps of selecting one of a plurality of predetermined periods of time for the fan-on mode and overriding any other mode of operation upon activation of the temporary fan-on mode.

Therefore, the present invention provides numerous novel features and advantages over prior thermostats. In particular, the invention provides a user selectable temporary fan-on mode of operation to a thermostat. The temporary fan-on mode provides the thermostat with a mode of operation to control a climate control system including an air-circulating fan, such that the fan is operated upon demand for a preselected period of time determined by a user. The temporary fan-on mode provides the user with a quick and easy option to select a specific predetermined period of time for operation of the fan and prevents undesired fan operation, which may occur when a user selects a continuous mode of fan operation and forgets that the thermostat is in the continuous mode.

These and other features and advantages will be in part apparent and in part pointed out in a more detailed description of the various embodiments and aspects of the invention as set out below.

BRIEF DESCRIPTION OF THE DRAWINGS

FIG. **1** is a front plan view of a thermostat constructed according to the principles of the present invention;

FIG. **2** is an exploded view of the liquid crystal display of the thermostat in FIG. **1**;

FIG. **3** is a perspective view of the thermostat of FIG. **1**, with the thermostat cover closed;

FIG. **4** is a block diagram of the circuit of the thermostat of FIG. **1**;

FIG. **5** is a flow chart of the thermostat function; and

FIG. **6** is a flow chart of an alternative embodiment of the thermostat function.

DETAILED DESCRIPTION OF THE PREFERRED EMBODIMENTS

A thermostat having selectable features or modes, including an improved user selectable mode of fan operation, is designated generally by reference numeral **20** in FIG. **1**. The thermostat **20** is generally of the type adapted to be connected to a climate control system, such as a heating or cooling system for controlling the climate control system. Among other things, the thermostat controls the air-circulating fan of the climate control system. In the preferred embodiment, the thermostat **20** is an electronic digital thermostat having a generally box shaped housing **22** and provided with a liquid crystal display (LCD) **24** and a key pad **26** on a front face **28** of the thermostat housing **22**. The LCD display **24**, which preferably displays status information or programming information, preferably comprises four display characters or digits **30** for displaying time, display characters **32** for indicating whether the time is AM or PM, two digits **34** for displaying temperature information, display characters **36** for indicating the temperature scale, display characters **38** for indicating the day of the week, display characters **40** for indicating system condition information, display characters **42** for indicating status information, and display characters **44** for indicating the mode of operation. The keypad **26** is preferably provided with buttons or keys **46** for selecting and programming the desired functions of the thermostat **20**.

The four digits **30** preferably display the current time. Additionally, the right two digits of the four digits **30**, as viewed in FIG. **2**, may display the room temperature. The thermostat **20** may be constructed such that the current time of day and current room temperature are alternately displayed by the four digits **30**. When the LCD display **24** is displaying the time of day, characters **32** display AM or PM as appropriate. Characters **34** display the set-point temperature as programmed by a user, characters **36** display whether the temperature is indicated in either Fahrenheit or Celsius, and characters **38** display the current day of the week or, during programming mode, display the day(s) being programmed.

Characters **40** display system condition information including CHECK BATTERY when the batteries, preferably "AA" alkaline batteries provided as a power back-up, are weak and should be replaced, BATTERY when the thermostat is running on battery power only, CHECK STAT when a problem is detected by the thermostat **20** within itself, and CHECK SYS or CHECK SYSTEM when the thermostat **20** detects certain problems in the heating and cooling system. Characters **42** display status information including FAN ON when the fan is operating continuously, FAN AUTO when the fan cycles with the heating or cooling system determined by user programmed temperature settings and PRG FAN ON when the fan is running in the aforementioned time mode based on the time of day, or in accordance with the improvement of the present invention, when the fan is running for a predetermined period of time selected by a user.

Characters **44** display the mode of operation of the thermostat **20** including HEAT during heating mode, COOL during cooling mode, AUTO during automatic modes of operation, HOLD during periods of manual user override to hold the thermostat setting at a selected temperature, VACA when vacation mode is activated, and OFF when the thermostat **20** is inoperative. Additionally, during programming mode, characters **44** display the time period being programmed, such as MOR for morning, DAY for daytime, EVE for evening and NHT for nighttime. Characters **44** also display information one word at a time during user configuration modes, such as PRGM MODE when the thermostat **20** is in a programming mode. Additional display characters **45** may also be provided for displaying HEAT or COOL, during heating or cooling modes, respectively, if characters **44** are displaying other information. Finally, time period display characters **47** are provided to display user selected time periods, including the selected time period for the temporary fan-on mode in accordance with the improvement to the thermostat **20**.

A user can view thermostat information on the LCD display **24** and can program the operation of the thermostat using the buttons **46** of the keypad **26**. The desired operation of the thermostat **20** is programmed by a user who enters information by depressing the buttons **46** according to specific parameters or specifications as described in more detail below.

The buttons **46** preferably include an up arrow button **48**, a down arrow button **50**, a "VIEW" program button **52**, a "TIME" set button **54**, a "BACK" button **56**, a "FWD" button **58**, a "DAY" set button **60**, an "ADV" program button **62**, a "HOLD" program button **64**, a "VACATION" button **66**, a "FAN" button **68**, a "FILTER" button **70**, a "SYSTEM" button **72**, a "DAYLIGHT SAVINGS TIME" button **74** and a "RUN" program button **76**.

The buttons **46** are operated by a user to program and operate the numerous functions of the thermostat. The up arrow **48** raises the set point temperature and the down arrow **50** lowers the set point temperature, which temperature is displayed by the characters **34**. The "VIEW" program button **52** initiates or reviews programming of the thermostat **20**. The "TIME" set button **54** is used along with the "BACK" button **56** and "FWD" button **58** to set the thermostat clock, which time is displayed by the four digits **30**. The "BACK" button **56** adjusts the time setting backward and the "FWD" button **58** adjusts the time setting forward. The "DAY" set button **60** is used to set the current day, which is displayed by characters **38**. The "BACK" button **56** and "FWD" button **58** are used to select the day.

The "ADV" program button **62** is used to advance operation to the next program mode. The "HOLD" program button **64** is used to manually override programming of the thermostat **20** and maintain the thermostat **20** setting at a selected temperature. The "VACATION" button **66** is used to enter and configure a vacation mode of operation, such as when a user leaves his home for a period of time and cannot view and program the thermostat **20** daily.

As will hereinafter be described in more detail, the "FAN" button **68** selects the mode of operation for an air-circulating fan of the climate control system attached to the thermostat **20**.

The "FILTER" button **70** is used to reset a filter change-out time or to select a time at which a filter attached to the climate control system for filtering impurities before the air is circulated throughout a building, is to be changed. A warning indicating CHECK SYS will be displayed by status

information characters **40** when the time period expires and the filter needs replacement.

The "SYSTEM" button **72** is used to set the mode of operation of a climate control system controlled by the thermostat **20**. Selection preferably can be made between a heating mode, a cooling mode, an off mode or an automatic mode depending on a user's preference and as required by the conditions. For example, during the winter season, or during periods of cold outside temperatures, the "SYSTEM" button **72** may be used to select the heating mode of operation, which results in the thermostat **20** controlling a heating system attached thereto. Characters **44** display this mode of operation of the thermostat **20** as HEAT on the LCD display **24**.

The "DAYLIGHT SAVINGS BUTTON" **74** adjusts the clock setting of the thermostat **20** forward or backward one hour. This feature is useful when the time of day is changed an hour due to daylight savings. Finally, the "RUN" program button **76** is operative to start or return to a programmed mode of operation.

When reference is made to using or operating one of the buttons **46**, or when reference is made that one of the buttons **46** is operative to perform some function, it should be understood by one skilled in the art that this refers to a user pressing one of the buttons **46** that corresponds to the specific programming request desired. The button may be an actual depressible button or simply a pressure or contact sensitive button or any other input device. The LCD display **24** displays information which is manually entered by a user pressing the desired buttons **46** for programming the thermostat **20**.

The thermostat of the present invention is provided with a light button **78**, which when depressed, activates a light source to illuminate the LCD display **24**. The light source may be a conventional light bulb, a light emitting diode (LED), an electroluminescent member, or any other suitable light source providing for viewing the LCD display **24** during low light conditions. The thermostat **20** also includes an operating indicator **80** that is illuminated by the thermostat **20** when the thermostat **20** or a climate control system attached to the thermostat **20** is operating.

A cover **82** is hingedly attached to the right-hand side of the thermostat **20**, as viewed in its open position in FIG. **1**, such that a user can close the cover over the keypad **26**, as shown in FIG. **3**, thereby hiding the buttons from view, preventing inadvertent operation of the buttons, and protecting the buttons **46** from exterior elements, such as dirt and dust. A programming guide or chart **84** may be provided on an inside face **86** of the cover **82** to aid a user and facilitate programming of the thermostat **20**.

In addition to the external components of the thermostat, namely the LCD display **24**, the keypad **26** and buttons **46**, the thermostat **20** is provided with internal component parts for controlling operation of the thermostat **20**. The electronic control components of the thermostat **20** of the present invention are preferably provided as shown in FIG. **4**. A temperature sensing circuit **88** is provided to accept temperature input signals from a temperature sensor **90** connected to the thermostat **20**. The temperature sensor **90** may be provided as part of the thermostat **20** and/or may be provided in a separate location, for example in a different room, and connected by wire or a Radio Frequency (RF) transmitter-receiver. The temperature sensing circuit **88** provides the thermostat **20** with information to determine whether user selected set-point temperatures have been achieved and therefore operation of an attached heating and/or cooling system should be turned on or off. Additionally, the temperature information (i.e., current temperature of the room in which the temperature sensor **90** is located) may be provided by the digits **30** of the LCD display **24**.

A real-time base circuit **92** is provided to control time-based operations of the thermostat **20**. A microcomputer **94** including at least a microprocessor **96** is provided to accept and process input signals from the keypad **26** with its buttons **46**, input signals from the temperature sensing circuit **88** and input signals from the real-time base circuit **92**. The microcomputer **94** thereafter provides control of a heating and/or cooling system attached to the thermostat **20**. A power supply **98** is provided to power the thermostat **20**, and in particular, the electronic components of the thermostat.

The microprocessor **96** analyzes the input signals and provides an output signal to an output control **100** which provides control of other component parts for operating an air-circulating fan of a heating and/or cooling system attached to the thermostat **20**. As shown in FIG. **4**, the thermostat **20** provides control of a heating and cooling system attached thereto. However, as pointed out, the thermostat **20** can control any air-circulating system connected to it, including a cooling system only, a heating system only, a heat-pump system, or a multistage system. The thermostat **20**, as shown in FIG. **4**, further includes a compressor contactor **102**, a gas valve **104**, and a fan relay **108**, which together provide for controlling the operation, including the enabling and disabling, of the heating and cooling system.

To this point, the description of the thermostat **20** has been of a type having typical component parts, such as the series 1F90 thermostats sold by White-Rodgers Division of Emerson Electric Co. It should be apparent to one skilled in the art that the thermostat **20** heretofore described may be modified and variations may be provided, such that the improvement described below may be included with the thermostat **20** as well as any thermostat for controlling operation of a climate control system, and in particular, to one controlling operation of a climate control system having an air-circulating fan.

Generally, thermostats of the type herein described operate on twenty-four volts, and are provided with a user interface, such as the keypad **26** and the LCD display **24**, for enabling multiple modes of operation for controlling a climate control system, such as an air circulation system including a fan connected thereto. The thermostat is normally operatively electrically coupled to the air circulation system. The thermostat may be hard wired to the climate control system, or otherwise operatively connected, for example, with RF transmitters or receivers. Typically, the user interface provides for selecting and programming the mode of operation of the thermostat including time and temperature settings. The thermostat **20** of the present invention preferably includes at least one of three programmable modes of operation: (1) an automatic mode providing for operation of the air circulation system based on temperature-related demands of the heating/cooling system; (2) a time mode providing for operation of the air circulation system based on time; (3) a continuous mode providing for continuous operation of the air circulation system; together with a temporary mode providing for operation of the air circulation system on demand for a preselected predetermined period of time. Programming is generally accomplished using the keypad **26** and depressing the buttons **46** according to the specific feature desired.

The operation of the thermostat **20** is controlled by a user programming the thermostat using the keypad **26** and the

LCD display **24**. The thermostat **20** is thereby operated according to user input settings. FIGS. **5** and **6** show the steps of programming of the thermostat **20** for the temporary fan-on mode of operation of the present invention. The blocks on the left side of FIGS. **5** and **6** represent user depression of specific buttons **46** and the blocks on the right side represent the LCD display **24** after the buttons **46** have been depressed.

Preferably, a user desiring to program the thermostat **20** depresses the BACK button **56** and FWD button **58** simultaneously to enter a user menu mode as shown in block **500**. The BACK or FWD button **56** or **58** is then depressed to select the desired feature in the menu. Each depression of either button **56** or **58** causes the LCD display **24** to scroll forward or backward through the possible operating modes, one at a time. For example, in block **502**, the "FWD" button **58** is depressed until the display of block **504** appears. Then, depressing the up arrow button **48** or down arrow button **50** enables the mode or feature of block **504**. Specifically, in block **506**, the up arrow button **48** or down arrow button **50** is pressed to toggle the displayed mode of PRG FAN from OFF in block **504** to ON in block **508**. Thus, in block **508**, the temporary fan-on feature is shown as being enabled or selected. Subsequently depressing the RUN program button **76** exits the user menu at block **510** and returns the LCD display **24** to a normal display at block **512** showing the system condition information **40** (HEAT), the FAN status information **42** (FAN AUTO), alternate time and ambient temperature on characters **30**, set point temperature on characters **34** and day of the week on characters **38**. Alternatively, the thermostat **20** may be provided such that at the expiration of a specific time period (i.e. **120** seconds), the LCD display **24** automatically exits the user menu and reverts back to the normal display.

Enabling (or selecting) the temporary fan-on mode of operation, according to the improvement of this invention, while the LCD display **24** is in the user menu, allows for subsequently programming the thermostat **20** to provide control of the operation of an air-circulation system connected to the thermostat **20** based on a user selected predetermined period of time.

To program the thermostat **20** to provide a desired period of operation of the fan in the temporary fan-on mode of operation, once the temporary fan-on mode is selected in the user menu and the RUN program button **76** is depressed to exit the user menu mode, a user depresses the FAN button **68** once at block **514**, and then within a specified time period, preferably one and a half seconds, the user depresses the FAN button **68** once again at block **516**, thereafter enabling a user to select one of several predetermined periods of time for operation of the thermostat **20** by pressing the up arrow button **48** to increase the hours from 0 to 6 as shown in block **518** (Depressing the FAN button **68** a second time after the specific time period at block **520** results in the LCD display **24** returning to its normal mode and the user must again depress the FAN button **68** twice before entering the time period selection mode). Therefore, the first depression of the FAN button **68** at block **514** will cause the LCD display **24** to display FAN ON and the second depression of the FAN button **68** at block **516** will cause the LCD display **24** to display PRG FAN ON on display characters **42**. Pressing the up arrow and down arrow buttons **48** and **50** now allow for selecting one of a predetermined periods of time for operation of an air-circulation system connected to the thermostat **20**, which time period will be displayed on display characters **47**. The thermostat may provide for selection of time periods in minutes or hours, or a combination of both, depending upon the application for which the thermostat **20** is being used.

FIG. **5** illustrates the selection of a predetermined period of operation based on hours. After the user selects the desired period of operation, the LCD display **24**, after preferably a few seconds as shown at block **522**, will return to its normal display at block **524**, and the temporary fan-on mode will be activated. The LCD display **24** will continue to display PRG FAN ON on display characters **42** to indicate that the temporary mode is active. This temporary fan-on mode overrides normal control and operation of the fan for the selected predetermined time. After the period of time selected by the user for the temporary fan-on mode of operation expires, the thermostat **20** will return to the mode of operation of the fan that it should be in based on the programmed schedule of the thermostat.

A user desiring to change the predetermined period of operation of the temporary fan-on mode simply presses the FAN button **68** twice at blocks **514** and **516**, as previously described, and selects another predetermined period of operation. The temporary mode of operation is selectable during any other mode of operation, and once activated, overrides that mode of operation for the selected predetermined period of time. Additionally, depressing the FAN button **68** once while in the temporary mode of operation, deactivates the mode and changes the mode of operation to the automatic mode; depressing the FAN button **68** a second time changes the mode of operation to the continuous mode; depressing the FAN button **68** a third time changes the mode of operation back to the temporary fan-on mode.

In an alternative embodiment of the temporary fan-on mode of operation, as shown in FIG. **6**, the user selected predetermined period of operation is selected while in the user menu using the up arrow button **48** or down arrow button **50** as shown in block **600**. Thereafter, depressing the FAN button **68** twice within a specific time period at blocks **602** and **604** will enable the temporary mode and provide operation of the air-circulation system attached to the thermostat **20** for the selected predetermined period of time. Upon the second depression of the FAN button **68**, the LCD display **24** will temporarily display at block **606** on display characters **47** the selected predetermined period for which the thermostat **20** will operate the air-circulation fan. In this embodiment, after expiration of the selected predetermined time period, the thermostat **20** will likewise return to the mode of operation of the fan that it should be in based on the programmed schedule of the thermostat. In this embodiment, the user must enter the user menu again if a different predetermined time period for the temporary mode of operation is desired.

Therefore, a user wishing to turn on an air-circulating system for a predetermined period of time, simply enters a user programming mode, selects this feature, thereafter selects the predetermined time period for operation and enables the temporary mode.

While the present invention has been described by reference to specific embodiments, it should be understood and apparent to those skilled in the art that modifications and variations of the invention may be constructed without departing from the scope of the invention. However, these changes and modifications are included within the teaching of the disclosure, and it is therefore intended that the invention be limited only by the scope of the claims appended hereto, and their equivalents.

What is claimed is:

1. In a thermostat for controlling the operation of a climate control system including an air-circulating fan, the

thermostat providing at least one of the following user-selectable modes of operating the fan: an automatic mode in which the air-circulating fan is operated based on temperature-related demands of the climate control system; a time mode in which the air-circulating fan is operated based on the time of day; and a continuous mode in which the air-circulating fan is operated continuously, the improvement comprising a user-selectable temporary fan-on mode of operating the air-circulating fan in which the air-circulating fan is operated only once for a pre-selected period of time.

2. The thermostat according to claim **1** wherein the preselected period of time is one of a plurality of predetermined periods of time.

3. The thermostat according to claim **1** wherein the temporary fan-on mode can be selected during any other mode of operation.

4. The thermostat according to claim **3** wherein the thermostat includes a programmed schedule and wherein after the expiration of the preselected period of time of the temporary fan-on mode, the thermostat returns to the mode of operation that it should be in based on the programmed schedule of the thermostat.

5. The thermostat according to claim **4** wherein the preselected period of time is selected from a plurality of predetermined periods of time.

6. A thermostat for controlling the operation of a climate control system including an air-circulating fan, the thermostat providing a temporary fan-on mode for selectively operating the air circulating fan only once for a pre-selected period of time in addition to at least one other user-selectable mode of operation selected from: an automatic mode in which the air circulating fan is operated based on temperature-related demands to the climate control system; a time mode in which the air-circulating fan is operated based on the time of day; and a continuous mode in which the air-circulating fan is operated continuously.

7. The thermostat according to claim **6** wherein the preselected period of time is one of a plurality of predetermined periods of time.

8. The thermostat according to claim **6** wherein the thermostat includes a control for selecting the temporary fan on mode of operation, and a control for preselecting the period of time.

9. The thermostat according to claim **8** wherein the control for preselecting the period of time is a control for preselecting one of a plurality of predetermined periods of time.

10. The thermostat according to claim **9** wherein the control for preselecting the period of time is activated upon operation of the control for selecting the temporary fan-on mode, and wherein the control for pre-selecting one of a plurality of predetermined periods of time scrolls through a series of pre-determined periods of time.

11. The thermostat according to claim **10** wherein the temporary fan-on mode can be selected during any other mode of operation.

12. The thermostat according to claim **11** wherein the control for preselecting one of a plurality of predetermined periods of time is deactivated if no period of time is selected by a user.

13. The thermostat according to claim **12** wherein the control for preselecting one of a plurality of predetermined periods of time is changeably selectable at any time prior to activation of the air circulating fan in the temporary fan-on mode of operation.

14. The thermostat according to claim **12** wherein the control for preselecting one of a plurality of predetermined periods of time is changeably selectable during the temporary fan-on mode of operation.

15. The thermostat according the claim **14** wherein the control for selecting the temporary fan or mode is changeably selectable to select another user-selectable mode of operation during the temporary fan-on mode of operation.

16. The thermostat according to claim **6** wherein the thermostat includes a programmed schedule and wherein after the expiration of the preselected period of time of the temporary fan-on mode, the thermostat returns to the mode of operation that it should be in based on the programmed schedule of the thermostat.

17. In a method of controlling a climate control system including an air-circulating fan in which the fan is operated in at least one of an automatic mode wherein the fan is operated based on temperature-related demands of the climate control system, a time mode wherein the fan is operated based on the time of day, and a continuous mode wherein the fan is operated continuously, the improvement comprising the step of selectively operating the fan in a temporary fan-on mode in which the fan operates only once for a preselected period of time.

18. The method according to claim **17** further comprising the step of returning the thermostat to the mode of operation that it should be in based on a programmed schedule of the thermostat, after the expiration of the preselected period of time of the temporary fan-on mode.

19. The method according to claim **18** wherein the step of selectively operating the fan in a temporary fan-on mode includes the step of selecting one of a plurality of predetermined periods of time for the fan-on mode.

20. The method according to claim **19** wherein the step of selectively operating the fan in the temporary fan-on mode includes the step of overriding any other mode of operation.

* * * * *