UNITED STATES PATENT AND TRADEMARK OFFICE

BEFORE THE PATENT TRIAL AND APPEAL BOARD

LENNOX INDUSTRIES INC.,

Petitioner,

v.

ROSEN TECHNOLOGIES LLC,

Patent Owner.

IPR2023-00718
Attorney Docket No.: 018635.0918

PETITION FOR *INTER PARTES* REVIEW OF CLAIMS 1, 4, AND 11-16 OF U.S. PATENT NO. 7,185,825

Mail Stop PATENT BOARD
Patent Trial and Appeal Board
United States Patent and Trademark Office
PO Box 1450
Alexandria, Virginia 22313-1450

TABLE OF CONTENTS

Page

TABLE OF AUTHORITIES VII

PETITIONER'S EXHIBIT LIST X

I. INTRODUCTION 1

II. MANDATORY NOTICES UNDER 37 C.F.R. 42.8(A)(1) 1

A. Real Party-in-Interest under 37 C.F.R. 42.8(b)(1) 1

B. Related Matters under 37 C.F.R. 42.8(b)(2) 1

C. Lead and Back-Up Counsel under 37 C.F.R. 42.8(b)(3) 2

D. Service Information under 37 C.F.R. 42.8(b)(4) 3

III. CLAIM LISTING 4

A. Claim 1 4

B. Claim 4 4

C. Claim 11 4

D. Claim 12 5

E. Claim 13 5

F. Claim 14 5

G. Claim 15 5

H. Claim 16 5

IV. REQUIREMENTS UNDER 37 C.F.R. 42.104 6

A. Grounds for Standing 6

B. Identification of Challenge and Statement of Precise Relief Requested 6

V. THE ’825 PATENT 7

A. Subject Matter 7

B. Prosecution History 8

C. Priority 9

VI. LEVEL OF ORDINARY SKILL IN THE ART 9

VII. CLAIM CONSTRUCTION 9

A. Terms Governed by 35 U.S.C. § 112, ¶6 10

B. Additional Terms of the ’825 Patent 11

VIII. SUMMARY OF PRIOR ART 12

A. *Rosen* (EX1004) 12

B. *Cacciatore* (EX1005) 13

C. *Shigeaki* (EX1006) 14

D. *Carey* (EX1007) 15

E. *Shamoon* (EX1008) 16

F. *Williamson* (EX1010) 18

G. *Toth* (EX1012) 18

IX. THE ASSERTED GROUNDS OF INVALIDITY 18

A. Ground 1: Claims 1 and 4 are obvious over *Rosen* in view of *Cacciatore*, and *Shigeaki* 18

1. Motivation to Combine 18

i. Rationale and motivation for combining *Rosen* with *Cacciatore* 18

ii. Rationale and motivation for combining *Rosen* as modified by *Cacciatore* with *Shigeaki* 22

2. Claim 1 25

i. 1[pre] 26

ii. 1[a].....26

iii. 1[b].....26

iv. 1[c].....26

v. 1[d]-1[g] 27

vi. 1[h]-1[j] 28

vii. 1[k].....30

viii.1[l]-1[n] 31

3. Claim 4 32

B. Ground 2: Claims 11-13 and 16 are obvious over *Rosen* in view of *Cacciatore*, and *Carey*.....33

1. Claim 11 33

i. 11[pre]-11[j] 33

ii. 11[k] 33

(a) Rationale and motivation for combining *Rosen* and *Carey* 37

2. Claim 12 40

3. Claim 13 40

4. Claim 16 40

C. Ground 3: Claims 11 and 14-16 are obvious over *Rosen* in view of *Cacciatore*, and *Williamson* 41

1. Claim 11 41

i. 11[pre]-11[j] 41

ii. 11[k] 41

(a) Rationale and motivation for combining *Rosen* and *Williamson*.....44

2. Claim 14 46

3. Claim 15 47

4. Claim 16 47

D. Ground 4: Claim 1 is obvious over *Shamoon* in view of *Cacciatore*, and *Shigeaki* 47

1. Motivation to Combine 48

i. Rationale and motivation for combining *Shamoon* with *Cacciatore*.....48

ii. Rationale and motivation for combining *Shamoon* with *Shigeaki*.....51

2. Claim 1 52

i. 1[pre] 53

ii. 1[a].....53

iii. 1[b].....53

iv. 1[c].....55

v. 1[d]-1[g] 56

vi. 1[h]-1[j] 58

vii. 1[k].....60

viii. 1[l]-1[n] 61

E. Ground 5: Claim 4 is obvious over *Shamoon* in view of *Cacciatore*, *Shigeaki* and *Toth* 63

1. Motivation to Combine 63

i. Rationale and motivation for combining *Shamoon* and *Toth* 63

2. Claim 4 64

F. Ground 6: Claims 11 and 12 are obvious over *Shamoon* in view of *Cacciatore*, and *Carey* 65

1. Claim 11 65

i. 11[pre]-11[j] 65

ii. 11[k] 66

(a) Rationale and motivation for combining *Shamoon* and *Carey* 66

2. Claim 12 69

G. Ground 7: Claims 13 and 16 are obvious over *Shamoon* in view of *Cacciatore*, *Carey*, and *Toth* 69

1. Claim 13 69

2. Claim 16 70

H. Ground 8: Claims 11 and 14 are obvious over *Shamoon* in view of *Cacciatore*, and *Williamson* 70

1. Claim 11 70

i. 11[pre]-11[j]: 70

ii. 11[k] 70

(a) Rationale and motivation for combining *Shamoon* and *Williamson* 71

2. Claim 14 72

I. Ground 9: Claims 15 and 16 are obvious over *Shamoon* in view of *Cacciatore*, *Williamson*, and *Toth* 73

1. Claim 15 73

2. Claim 16 73

X. SECONDARY CONSIDERATIONS 73

XI. INSTITUTION SHOULD BE GRANTED 74

A. Discretion Under 35 U.S.C. § 314(a) 74

B. Discretion Under 35 U.S.C. §325(d) 79

XII. CONCLUSION 79

TABLE OF AUTHORITIES

Page(s)

CASES

10X Genomics, Inc. v. Bio-Rad Labs,
IPR2020-00086, Paper 8 (P.T.A.B. Apr. 27, 2020) 12

Abbott Diabetes Care, Inc. v. DexCom, Inc.,
IPR2022-00921, Paper 15 (P.T.A.B. Nov. 3, 2022).....12

Apple Inc. v. Fintiv, Inc.,
IPR2020-00019, Paper 11 (P.T.A.B. Mar. 20, 2020).....74, 75, 78, 79

Apple Inc. v. Smart Mobile Techs. LLC,
IPR2022-00808, Paper 24 (P.T.A.B. Sept. 29, 2022).....76

Facebook, Inc. v. USC IP P'ship, L.P.,
IPR2021-00033, Paper 13.....76

Gen. Plastic Indus. Co. v. Canon Kabushiki Kaisha,
IPR2016-01357, Paper 19 (P.T.A.B. Sept. 6, 2017).....74

Google LLC v. Parus Holdings, Inc.,
IPR2020-00846, Paper 9 (P.T.A.B. Oct. 21, 2020).....75, 77, 78

Halliburton Energy Servs., Inc. v. U.S. Well Servs., LLC,
IPR2021-01037, Paper 12 (P.T.A.B. Jan. 19, 2022) 75

Intel Corp. v. Pact XPP Schweiz AG,
22-1037 (CAFC Mar. 13, 2023) 23

McCoy v. Heal Sys., LLC,
850 F. App'x 785 (Fed. Cir. 2021).....19

Micron Tech., Inc. v. Godo Kaisha IP Bridge 1,
IPR2020-01008, Paper 10 (P.T.A.B. Dec. 7, 2020) 75

Micron Tech., Inc. v. Vervain, LLC,
IPR2021-01550, Paper 11 (P.T.A.B. Apr. 11, 2022) 75

Microsoft Corp. v. WSOU Invs., LLC,
IPR2021-00930, Paper 8 (P.T.A.B. Dec. 2, 2021) 76

NHK Spring Co., Ltd. v. Intri-Plex Techs., Inc.,
IPR2018-00752, Paper 8 (P.T.A.B. Sept. 12, 2018).....74

Nidec Motor Corp. v. Zhongshan Broad Ocean Motor Co.,
868 F.3d 1013 (Fed. Cir. 2017) 10

Oticon Med. AB v. Cochlear Ltd.,
IPR2019-00975, Paper 15 (P.T.A.B. Oct. 16, 2019).....78

Qualcomm Inc. v. Apple Inc.,
24 F.4th 1367 (Fed. Cir. 2022) 19, 25, 48

Rosen Technologies LLC v. Lennox Industries Inc.,
Case No. 3:22-cv-00732 (N.D. Tex.)
..... 1, 3, 10, 11, 74, 76, 77, 78, 81

Rosen Technologies LLC v. Resideo Technologies, Inc.,
Case No. 6:22-cv-00131 (W.D. Tex. Feb. 6, 2022) (dismissed on October 27, 2022) 2

Sand Revolution II, LLC v. Cont'l Intermodal Grp.-Trucking LLC,
IPR2019-01393, Paper 24 (P.T.A.B. Jun. 16, 2020).....74, 77, 79

Verdant Environmental Technologies v. Ecobee Inc.,
Case No 1:10-cv-02771 (N.D. Ill. May 4, 2010) (closed pursuant to notice of voluntary dismissal on November 1, 2010).....2

STATUTES

35 U.S.C. § 101.....76

35 U.S.C. § 102..... 12, 13, 14, 15, 16, 18

35 U.S.C. § 103.....6, 12

35 U.S.C. § 112.....10, 11

35 U.S.C. § 314(a) 74

35 U.S.C. § 318(b) 79

35 U.S.C. §325(d) 79

OTHER AUTHORITIES

37 C.F.R. 42.8(a)(1) 1

37 C.F.R. 42.8(b)(1) 1

37 C.F.R. 42.8(b)(2) 1

37 C.F.R. 42.8(b)(3) 2

37 C.F.R. 42.8(b)(4) 3

37 C.F.R. 42.104 6

37 C.F.R. §42.10(b) 3

37 C.F.R. §42.100(b) 9, 10

77 Fed. Reg. 48759-60 (Aug. 14, 2012) 1

PETITIONER'S EXHIBIT LIST

Ex No.[1]	Description of Documents
1001	U.S. Patent No. 7,185,825 ("'825 Patent")
1002	Declaration of R. Jacob Baker, Ph.D., P.E.
1003	Prosecution File History of the '825 Patent
1004	U.S. Patent Publication No. 2003/0142121 ("*Rosen*")
1005	U.S. Patent No. 4,799,176 ("*Cacciatore*")
1006	Certified Translation of Japanese Patent No. JP2740118B2 ("*Shigeaki*")
1007	U.S. Patent Publication No. 2003/0121652 ("*Carey*")
1008	U.S. Patent Publication No. 2003/0034898 ("*Shamoon*")
1009	U.S. Patent No. 5,460,327 ("*Hill*")
1010	U.S. Patent No. 7,133,739 ("*Williamson*")
1011	U.S. Patent No. 5,181,653 ("*Foster*")
1012	U.S. Patent No. 6,318,639 ("*Toth*")

[1] Citations to issued patents (Exhibits 1001, 1005, 1006, 1009, 1010, 1011, 1012, 1019 and 1021) are made by column and line number. Citations to patent application publications (Exhibits 1004, 1007 and 1008) and Exhibit 1002 are made by paragraph number. Citations to Exhibits 1013 and 1018 are made by page and line number. Citations to Exhibits 1003, 1014, 1015, 1016, 1017, 1020, 1022, 1023, 1024, 1025, 1026,1027, 1028, 1029, 1030 and 1031 are made by page number.

Ex No.[1]	Description of Documents
1013	Transcript of Deposition of Howard J. Rosen, December 14, 2022, *Rosen Technologies LLC v. Lennox Industries, Inc.*, No. 3:22-cv-00732-K (N.D. Tex.)
1014	Plaintiff's Proposed Claim Constructions, *Rosen Technologies LLC v. Lennox Industries, Inc.*, No. 3:22-cv-00732-K (N.D. Tex. Feb. 2, 2023)
1015	Defendant's Disclosure of Claim Constructions Extrinsic Evidence, *Rosen Technologies LLC v. Lennox Industries, Inc.*, No. 3:22-cv-00732-K (N.D. Tex. Feb. 2, 2023)
1016	Scheduling Order, *Rosen Technologies LLC v. Lennox Industries, Inc.*, No. 3:22-cv-00732-K (N.D. Tex. Sept. 1, 2022)
1017	Joint Claim Construction and Prehearing Statement, *Rosen Technologies LLC v. Lennox Industries, Inc.*, No. 3:22-cv-00732-K (N.D. Tex. Feb. 23, 2023)
1018	International Publication No. WO 03/040839 ("*Geiwitz*")
1019	U.S. Patent No. 5,541,586 ("*Wise*")
1020	A Taxonomy of Internet Appliances ("*Gillett*")
1021	U.S. Patent No. 6,593,766 ("*Aisa*")
1022	Electronic Order Granting Unopposed Motion to Amend Scheduling Order, *Rosen Technologies LLC v. Lennox Industries, Inc.*, No. 3:22-cv-00732-K (N.D. Tex. March 13, 2023)
1023	Statutory Disclaimer and Related Documents filed in U.S. Patent No. 6,824,069 on February 22, 2005
1024	Network Time Protocol (NTP), https://www.rfc-editor.org/rfc/rfc958, D.L. Mills (September 1985)
1025	S3C8248 Data Sheet, Samsung (Excerpted)

Ex No.[1]	Description of Documents
1026	Webster's Dictionary of Computer Terms, Bryan Pfaffenberger, 8th ed. (2000) (Excerpted)
1027	Random House Webster's Computer & Internet Dictionary, Phillip E. Margolis, 3rd ed. (1999) (Excerpted)
1028	Andrew T. Dufresne, Nathan K. Kelley, & Lori Gordon, *How reliable are trial dates relied on by the PTAB in the Fintiv analysis?*, PERKINS COIE 1600 PTAB & BEYOND, Oct. 29, 2021
1029	Dani Kass, *Fintiv Fails: PTAB Uses 'Remarkably Inaccurate' Trial Dates*, LAW360, Nov. 2, 2021
1030	Plaintiff's Amended Disclosure of Asserted Claims and Preliminary Infringement Contentions, *Rosen Technologies LLC v. Lennox Industries, Inc.*, No. 3:22-cv-00732-K (N.D. Tex. Nov. 21, 2022)
1031	Katherine K. Vidal, Memorandum: Interim Procedure for Discretionary Denials in AIA Post-Grant Proceedings with Parallel District Court Litigation (June 21, 2022)

I. INTRODUCTION

Lennox Industries Inc. ("Petitioner" or "Lennox") respectfully submits this Petition for *inter partes* review of Claims 1, 4, and 11-16 (the "Challenged Claims") of U.S. Patent No. 7,185,825 (the "'825 Patent"). Petitioner respectfully requests institution of *inter partes* review and a finding that the Challenged Claims are unpatentable.

II. MANDATORY NOTICES UNDER 37 C.F.R. 42.8(a)(1)

A. Real Party-in-Interest under 37 C.F.R. 42.8(b)(1)

The real parties-in-interest are Lennox Industries Inc., Lennox International Inc., Heatcraft Inc., Heatcraft Technologies Inc., and Lennox Procurement Company Inc. Lennox Industries Inc. is the Petitioner. Lennox Industries Inc., Heatcraft Inc., Heatcraft Technologies Inc., and Lennox Procurement Company Inc. are wholly owned subsidiaries of Lennox International Inc. No other parties exercised or could have exercised control over this Petition; no other parties funded or directed this Petition. *See* Office Patent Trial Practice Guide, 77 Fed. Reg. 48759-60.

B. Related Matters under 37 C.F.R. 42.8(b)(2)

As of the filing date of this Petition, and to the best knowledge of Petitioner, the '825 Patent is involved in the following:

Rosen Technologies LLC v. Lennox Industries Inc., Case No. 3:22-cv-00732 (N.D. Tex.) ("NDTX Litigation"). The '825 Patent was first asserted against Petitioner in a Complaint for Patent Infringement filed on Mar. 31, 2022. Petitioner

moved to dismiss the complaint on June 21, 2022. On January 4, 2023, Petitioner's motion to dismiss was granted in part and denied in part.

As of the filing date of this Petition, and to the best knowledge of Petitioner, the '825 Patent has been involved in the following proceedings in which Petitioner was not a party:

Rosen Technologies LLC v. Resideo Technologies, Inc., Case No. 6:22-cv-00131 (W.D. Tex. Feb. 6, 2022) (dismissed on October 27, 2022); and

Verdant Environmental Technologies v. Ecobee Inc., Case No 1:10-cv-02771 (N.D. Ill. May 4, 2010) (closed pursuant to notice of voluntary dismissal on November 1, 2010).

C. Lead and Back-Up Counsel under 37 C.F.R. 42.8(b)(3)

Petitioner provides the following designation of counsel:

LEAD COUNSEL	BACK-UP COUNSEL
David G. Wille (Reg. No. 38,363) **BAKER BOTTS L.L.P.** 2001 Ross Avenue, Suite 900 Dallas, TX 75201-2980 Tel: 214-953-6595 david.wille@bakerbotts.com	Samir A. Bhavsar (Reg. No. 41,617) Tel: 214-953-6581 samir.bhavsar@bakerbotts.com Clarke W. Stavinoha (Reg. No. 71,152) Tel: 214-953-6484 clarke.stavinoha@bakerbotts.com Melissa Muenks (Reg. No. 78,860) Tel: 214-953-6949 melissa.muenks@bakerbotts.com Caroline Duncan (Reg. No. 79,897) Tel: 214-953-6514 caroline.duncan@bakerbotts.com

	BAKER BOTTS L.L.P. 2001 Ross Avenue, Suite 900 Dallas, TX 75201-2980

D. Service Information under 37 C.F.R. 42.8(b)(4)

A copy of this entire Petition, including all Exhibits and a power of attorney, is being served by FEDERAL EXPRESS, costs prepaid, to the address of the attorney or agent of record for the ’825 Patent at the USPTO: Marc Hankin, Hankin Patent Law, APC, 12400 Wilshire Boulevard, Suite 1265, Los Angeles, CA 90025; and to the address of the attorney or agent of record for Patent Owner in the NDTX Litigation: Hao Ni, NI, WANG & MASSAND, PLLC, 8140 Walnut Hill Ln., Ste. 500, Dallas, TX 75231.

Please address all correspondence to lead and back-up counsel. Petitioner consents to service at lead counsel’s address provided above. Petitioner consents to electronic service, provided it is made to all of the following e-mail addresses:

- david.wille@bakerbotts.com;
- samir.bhavsar@bakerbotts.com;
- clarke.stavinoha@bakerbotts.com;
- melissa.muenks@bakerbotts.com; and
- caroline.duncan@bakerbotts.com.

A Power of Attorney is filed concurrently herewith under 37 C.F.R. §42.10(b).

III. CLAIM LISTING

A. Claim 1

1[pre]	A programmable thermostat for controlling space conditioning equipment comprising:
1[a]	A) means coupling suitable power for energizing said thermostat from said space conditioning equipment to said thermostat;
1[b]	B) an interactive interface for a user to enter programming information into said thermostat;
1[c]	C) a temperature sensor for providing an electrical signal indicative of the temperature of a conditioned space in which the temperature sensor is situated;
1[d]	D) a processor, said processor including:
1[e]	1) a central processing unit;
1[f]	2) a first memory coupled to said central processing unit for storing program and data information; and
1[g]	3) an input/output unit including:
1[h]	a) a sensor input coupled to said temperature sensor for receiving said electrical signal therefrom; and
1[i]	b) a control output coupled to the space conditioning equipment for issuing control signals thereto;
1[j]	4) a real time clock;
1[k]	5) a non-volatile random access memory; and
1[l]	6) a control program stored in said first memory directing:
1[m]	a) said real time clock to periodically read its current time and date information into said non-volatile memory; and
1[n]	b) upon restart after a loss and then return of power from said space conditioning equipment, read the time and date information stored in said non-volatile memory into said real time clock.

B. Claim 4

4	The thermostat of claim 1 which includes a vacation mode of operation.

C. Claim 11

11[pre]	A programmable thermostat for controlling space conditioning equipment comprising:
11[a]	A) means coupling suitable power for energizing said thermostat from

	said space conditioning equipment to said thermostat;
11[b]	B) an interactive interface for a user to enter programming information into said thermostat;
11[c]	C) a temperature sensor for providing an electrical signal indicative of the temperature of a conditioned space in which the temperature sensor is situated;
11[d]	D) a processor, said processor including:
11[e]	1) a central processing unit;
11[f]	2) a first memory coupled to said central processing unit for storing program and data information; and
11[g]	3) an input/output unit including:
11[h]	a) a sensor input coupled to said temperature sensor for receiving said electrical signal therefrom; and
11[i]	b) a control output coupled to the space conditioning equipment for issuing control signals thereto;
11[j]	4) a real time clock; and
11[k]	5) a receiver adapted to receive current time and date information from an external source of the current time and date, said receiver being coupled to said real time clock such that the time and date information thereof is updated from said receiver.

D. Claim 12

12	The thermostat of claim 11 in which said receiver receives wireless signals from said external source.

E. Claim 13

13	The thermostat of claim 12 which includes a vacation mode of operation.

F. Claim 14

14	The thermostat of claim 11 in which said receiver receives signals via the Internet from said external source.

G. Claim 15

15	The thermostat of claim 14 which includes a vacation mode of operation.

H. Claim 16

16	The thermostat of claim 11 which includes a vacation mode of operation.

IV. REQUIREMENTS UNDER 37 C.F.R. 42.104

A. Grounds for Standing

Petitioner certifies that the ’825 Patent is available for IPR and that Petitioner is not barred or otherwise estopped.

B. Identification of Challenge and Statement of Precise Relief Requested

This IPR, supported by the declaration of R. Jacob Baker, Ph.D., P.E. (EX1002), requests cancellation of Claims 1, 4 and 11-16 of the ’825 Patent under the following grounds:

Ground	’825 Patent Claims	Basis for Challenge
1	1, 4	Obvious under § 103 based on *Rosen* in view of *Cacciatore*, and *Shigeaki*
2	11, 12, 13, 16	Obvious under § 103 based on *Rosen* in view of *Cacciatore*, and *Carey*
3	11, 14, 15, 16	Obvious under § 103 based on *Rosen* in view of *Cacciatore*, and *Williamson*
4	1	Obvious under § 103 based on *Shamoon* in view of *Cacciatore*, and *Shigeaki*
5	4	Obvious under § 103 based on *Shamoon* in view of *Cacciatore*, *Shigeaki*, and *Toth*
6	11, 12	Obvious under § 103 based on *Shamoon* in view of *Cacciatore*, and *Carey*
7	13, 16	Obvious under § 103 based on *Shamoon* in view of *Cacciatore*, *Carey*, and *Toth*
8	11, 14	Obvious under § 103 based on *Shamoon* in view of *Cacciatore*, and *Williamson*
9	15, 16	Obvious under § 103 based on *Shamoon* in view of *Cacciatore*, *Williamson*, and *Toth*

V. The ’825 Patent

A. Subject Matter

The ’825 Patent describes and claims “a programmable thermostat incorporating a fail safe real time clock and which does not require battery or other backup device in case of a power failure.” EX1001, Abstract, 1:8-10; EX1002, ¶44.

The claimed thermostat system includes conventional components such as a temperature sensor, a touch screen for interactive interface with a user, a processor including a central processing unit, a real time clock, a memory, an input/output unit, and a control program. EX1001, 3:62-4:36. The ’825 Patent concedes that the majority of the elements of its thermostat system were well known in the art before the priority date of the ’825 Patent. EX1002, ¶45; EX1001, 1:14-17, 1:29-35, 1:43-50. Figure 1, which contains nearly all the hardware elements of Claims 1 and 11, is labeled as “prior art” and described as such. EX1001, Figure 1, 3:54-57, 4:9-5:17; EX1002, ¶49.

The ’825 Patent purports to address problems maintaining time and date information in the event of power failures. EX1002, ¶46. The ’825 Patent proposes to eliminate “the need for providing a backup power source” such as a battery or supercapacitor, for a thermostat. EX1001, Abstract, 2:18-22, 2:37-40. Instead, a “fail safe” real-time clock is employed. *Id.*, 2:57-60.

Three options are provided for making a clock “fail safe” in case of a power

outage. EX1002, ¶¶47-48. First, the ’825 Patent describes a thermostat having “a non-volatile random access memory in which the current time and date are periodically read from the real time clock into the random access memory such that, in the event of an outage, the last time and date previously stored is recovered from the non-volatile random access memory upon the restoration of power to reset the real time clock in anticipation of resuming operation in the mode running at the time of the outage.” EX1001, 3:1-9. This concept was taught by the prior art. EX1006; EX1002, ¶47. The ’825 Patent explains that a second option is that the system “normally keep[s], and resume[s] after an outage, precision time from a suitable source such as WWVB.” EX1001, 6:26-28; EX1002, ¶¶48, 51. WWVB concerns a time signal that has been broadcast using radio waves since the 1960s. This concept was known in the prior art. EX1007; EX1002, ¶48. A third option is also disclosed. EX1002, ¶48. Time can be retrieved via the Internet and stored in the clock of the thermostat. EX1001, 6:33-38; EX1002, ¶48. This concept was well known in the prior art. *See* EX1020, 9 n.10; EX1010, 4:36-40, 5:34-36, 7:38-42; EX1002, ¶48.

B. Prosecution History

The ’825 Patent was filed as Application No. 10/875,579 on June 24, 2004. EX1001, Cover. The ’825 Patent originally claimed priority as a continuation-in-part of Application No. 10/060,768, but that was later disclaimed. EX1003, 58;

EX1002, ¶55.

The prosecution history for the ’825 Patent is minimal. *Id.*, ¶¶56-57. The USPTO issued a non-final rejection based on *Hendricks* on March 29, 2006. EX1003, 41-45. The applicant then alleged that the non-volatile memory claim element was a non-obvious point of novelty and achieved allowance. *Id.*, 19-21, 32-36.

The Examiner cited only fourteen references (eleven of which were identified by the applicant). EX1001, Cover; EX1003, 63-65, 171-172. Most of the prior art for Grounds 1-9 was not considered during prosecution of the ’825 Patent.

C. Priority

The ’825 Patent has a priority date no earlier than its filing date, June 24, 2004. *See* EX1001, Cover; EX1002, ¶¶43, 58-59.

VI. LEVEL OF ORDINARY SKILL IN THE ART

A person of ordinary skill in the art (“POSITA”) as of June 24, 2004 would have had a Bachelor of Science degree in Electrical Engineering or a year or two of experience working with or designing processor-based systems with network connectivity. EX1002, ¶¶60-63. A person with less or different education but more relevant practical experience, or vice versa, may also meet this standard. *Id.*, ¶61.

VII. CLAIM CONSTRUCTION

Petitioner interprets the claims “in accordance with the ordinary and

customary meaning…as understood by one of ordinary skill in the art." 37 C.F.R. §42.100(b). Except as set forth below, the Board need not construe any term to find the Challenged Claims invalid. *See Nidec Motor Corp. v. Zhongshan Broad Ocean Motor Co.*, 868 F.3d 1013, 1017 (Fed. Cir. 2017).

A. Terms Governed by 35 U.S.C. § 112, ¶6

The Challenged Claims include certain elements that recite "means" for performing various functions. Element 1[a] of Claim 1 and element 11[a] of Claim 11 include a "means coupling" limitation. EX1001, 6:60-62, 8:5-7.

In the NDTX Litigation, the parties agree that element 1[a] of Claim 1 is governed by 35 U.S.C. § 112, ¶6 and agree on the function of the limitation. EX1017, 61-62. However, the parties disagree on the corresponding structure. *Id.* Petitioner applies Patent Owner's proposed construction here, without conceding that it is correct.[2]

Limitations	Structure and Function
1[a]/11[a]: "means coupling suitable power for energizing said thermostat from said space conditioning equipment to said thermostat"	Function: coupling suitable power for energizing said thermostat from said space conditioning equipment to said thermostat Structure: a (power) line and any

[2] To the extent Patent Owner subsequently argues that "means coupling" should not be interpreted under 35 U.S.C. § 112 ¶6, the claims are still rendered invalid by the functionality disclosed in the prior art, as discussed herein.

	equivalents EX1001, Figures 1-2, 2:18-22, 5:3-5, 5:43-48.

EX1017, 61-62.

To the extent the Board disagrees with Patent Owner's proposed constructions, Petitioner submits that the claims of the '825 Patent are still obvious in light of the prior art combinations identified herein. EX1002, ¶¶67-69.

B. Additional Terms of the '825 Patent

In the NDTX Litigation, Patent Owner contends that the claimed "sensor input" in element 1[h] and "control output" in element 1[i] are not subject to 35 U.S.C. § 112, ¶6.[3] EX1017, 66-73. Petitioner has argued that the "sensor input" and "control output" are indefinite for failing to disclose corresponding structure. EX1017, 66, 72-73. Patent Owner disagrees. *See* EX1017, 66-73. Without

[3] Element 1[h] of Claim 1 is identical to element 11[h] of Claim 11 and element 1[i] of Claim 1 is identical to element 11[i]. Because Claim 11 was not asserted in the NDTX Litigation, the Patent Owner has not proposed a construction. Without conceding that these claim elements satisfy 35 U.S.C. § 112, Petitioner applies Patent Owner's proposed "plain and ordinary meaning" interpretations of elements 1[h] and 1[i] for elements 11[h] and 11[i], respectively, without conceding they are correct.

conceding definiteness or correctness, Petitioner applies Patent Owner's proposed "plain and ordinary meaning" interpretations here. This approach is permitted. *See, e.g.*, *10X Genomics, Inc. v. Bio-Rad Labs*, IPR2020-00086, Paper 8 at 21 (P.T.A.B. Apr. 27, 2020); *Abbott Diabetes Care, Inc. v. DexCom, Inc.*, IPR2022-00921, Paper 15 at 7-11 (P.T.A.B. Nov. 3, 2022).

VIII. SUMMARY OF PRIOR ART

Petitioner assumes without conceding that the Challenged Claims are entitled to a June 24, 2004 priority date, and thus are subject to the pre-AIA provisions of 35 U.S.C. §§ 102 and 103.

A. *Rosen* (EX1004)

Rosen (U.S. Patent Application Publication No. 2003/0142121) was filed on January 30, 2002 and published on July 31, 2003, nearly a year before the June 24, 2004 priority date by the same inventor. EX1004, Cover. It is prior art under 35 U.S.C. §§ 102(a) and (e). Remarkably, however, *Rosen* was not considered, during prosecution of the '825 Patent. EX1001, Cover.

Figure 1 of *Rosen* is nearly identical to Figure 1 of the '825 Patent and discloses nearly all hardware elements of Claims 1 and 11:

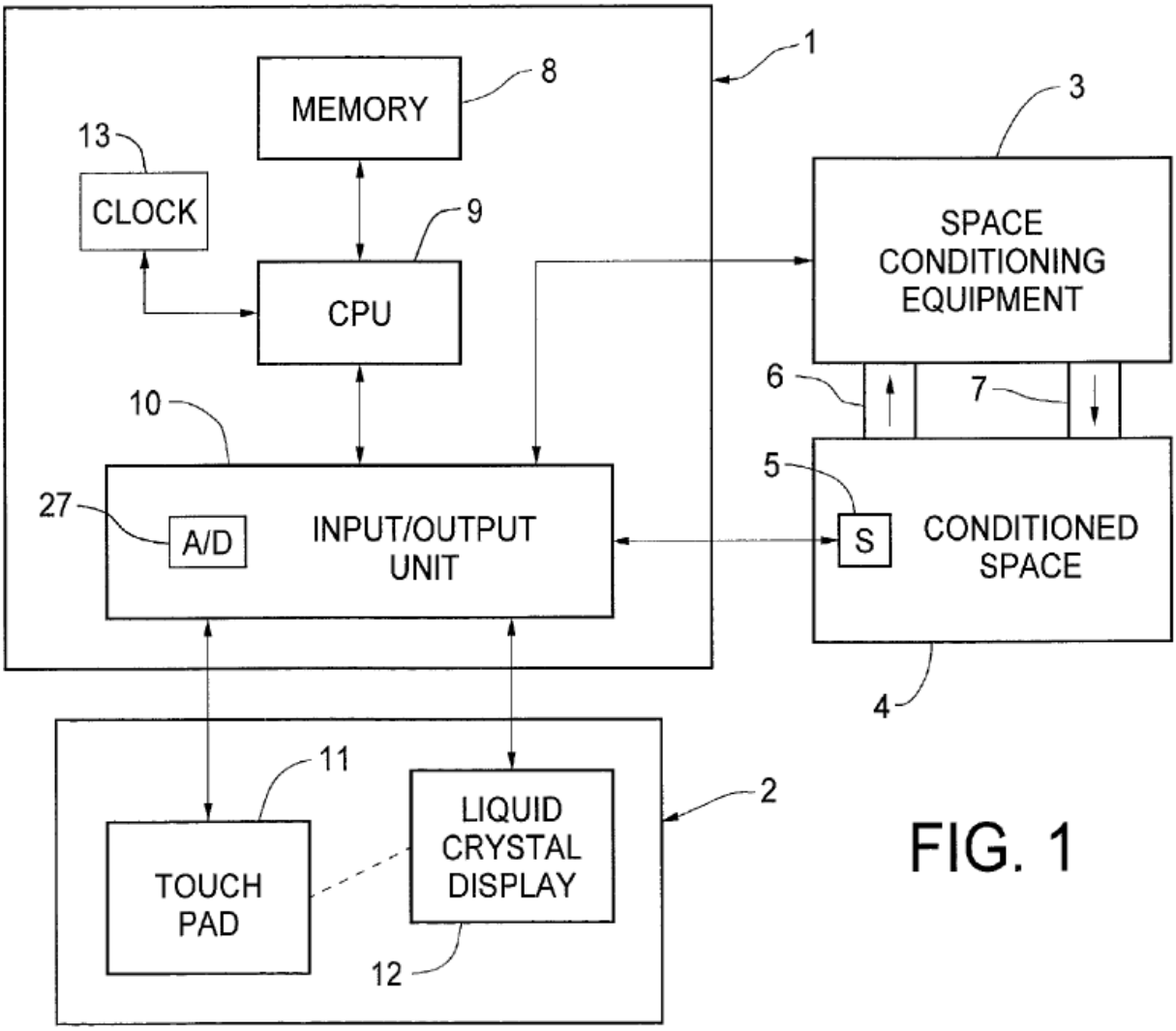

FIG. 1

EX1004, Figure 1, ¶0020; EX1002, ¶¶83-85.

B. *Cacciatore* (EX1005)

Cacciatore (U.S. Patent No. 4,799,176) entitled "Electronic Digital Thermostat" was filed December 29, 1986 and issued January 17, 1989, and thus is prior art under pre-AIA 35 U.S.C. §§ 102(a), (b) and (e). EX1005, Cover. *Cacciatore* was not considered during prosecution. EX1003. It is included in this IPR merely for its unremarkable disclosure of receiving power for the thermostat

from space conditioning equipment—a well-known configuration that predates the ’825 Patent by many years. EX1005, Abstract; EX1002, ¶¶86-88.

Figure 1 of *Cacciatore* illustrates a programmable thermostat system similar to that of the ’825 Patent, which includes isolation diode 142:

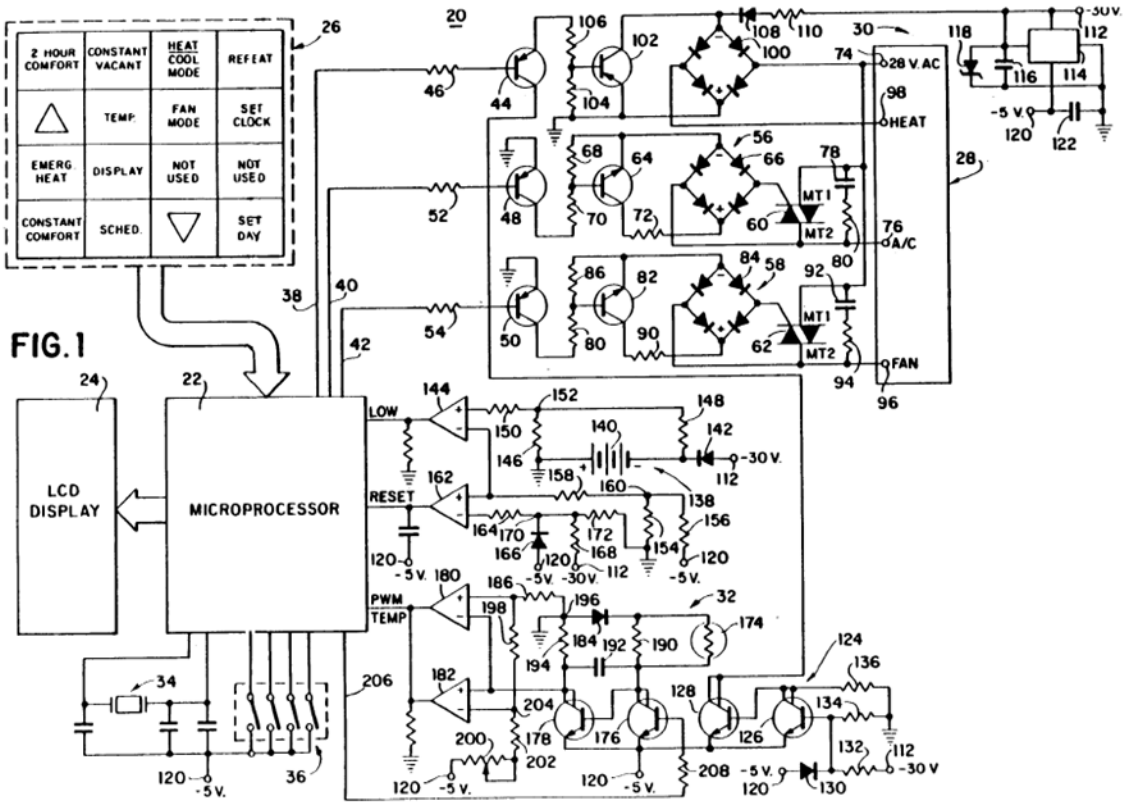

EX1005, Figure 1, 6:1-10, 6:17-21, 6:54-58, 7:14-22, 7:33-45; EX1002, ¶¶87-88.

C. *Shigeaki* (EX1006)

Shigeaki (Japanese Patent Application Publication No. 2740118B2) published on June 16, 1995, more than one year before the June 24, 2004 priority date. EX1006, Cover. *Shigeaki* is prior art at least under 35 U.S.C. §§ 102(a) and (b). *Shigeaki* was not considered during prosecution. EX1003. *Shigeaki* teaches the

same method of restoring time as is claimed in Claim 1. EX1002, ¶¶89-91.

Shigeaki's clock devices include control circuits for gas hot-air heaters. EX1006, ¶¶0001-0002. *Shigeaki* employs the following operation to restore time after a power outage: "[i]n the event of a power outage… the data storage means stores the current time and the fact of the occurrence of the power outage in the semiconductor non-volatile memory…" and then "[w]hen a power outage of the commercial power supply is restored,… the data reading means reads time data and power outage data from the semiconductor non-volatile memory." *Id.*, ¶¶0013-0014. *Shigeaki* operates such that "[t]he timekeeping means resumes timekeeping from the time corresponding to the read time data,…" *Id.*, ¶0015.

D. *Carey* (EX1007)

Carey (U.S. Patent Application Publication No. 2003/0121652) was filed on February 18, 2003 and published July 3, 2003, nearly a year before the June 24, 2004 priority date. EX1007, Cover. *Carey* is prior art at least under 35 U.S.C. §§ 102(a) and (e). *Carey* was cited during prosecution but not used in a rejection. EX1003, 48. *Carey* is included in this IPR because it teaches a first method of receiving a time from an external source as addressed in Claim 11/12—specifically the WWVB receiver. EX1002, ¶¶92-94.

Carey discloses a "digital programmable thermostat" "that can automatically set the current time and date…" EX1007, Abstract, ¶0004. *Carey's* thermostat

"automatically sets the current time and date using information broadcasted by station WWVB, which is operated by the National Institute of Standards and Technology." *Id*., ¶0004.

E. *Shamoon* (EX1008)

Shamoon (U.S. Patent Application Publication No. 2003/0034898) was filed on November 13, 2001 and published on February 20, 2003, more than one year before the June 24, 2004 priority date. EX1008, Cover. *Shamoon* is prior art at least under 35 U.S.C. §§ 102(a), (b) and (e). *Shamoon* was not considered during prosecution. EX1003. *Shamoon* is included in this IPR in an abundance of caution in case Patent Owner can swear behind the *Rosen* reference.

Figure 6 of *Shamoon* illustrates a thermostat with the conventional hardware elements of Claims 1 and 11 of the '825 Patent. EX1008, ¶0034; EX1002, ¶¶95-96.

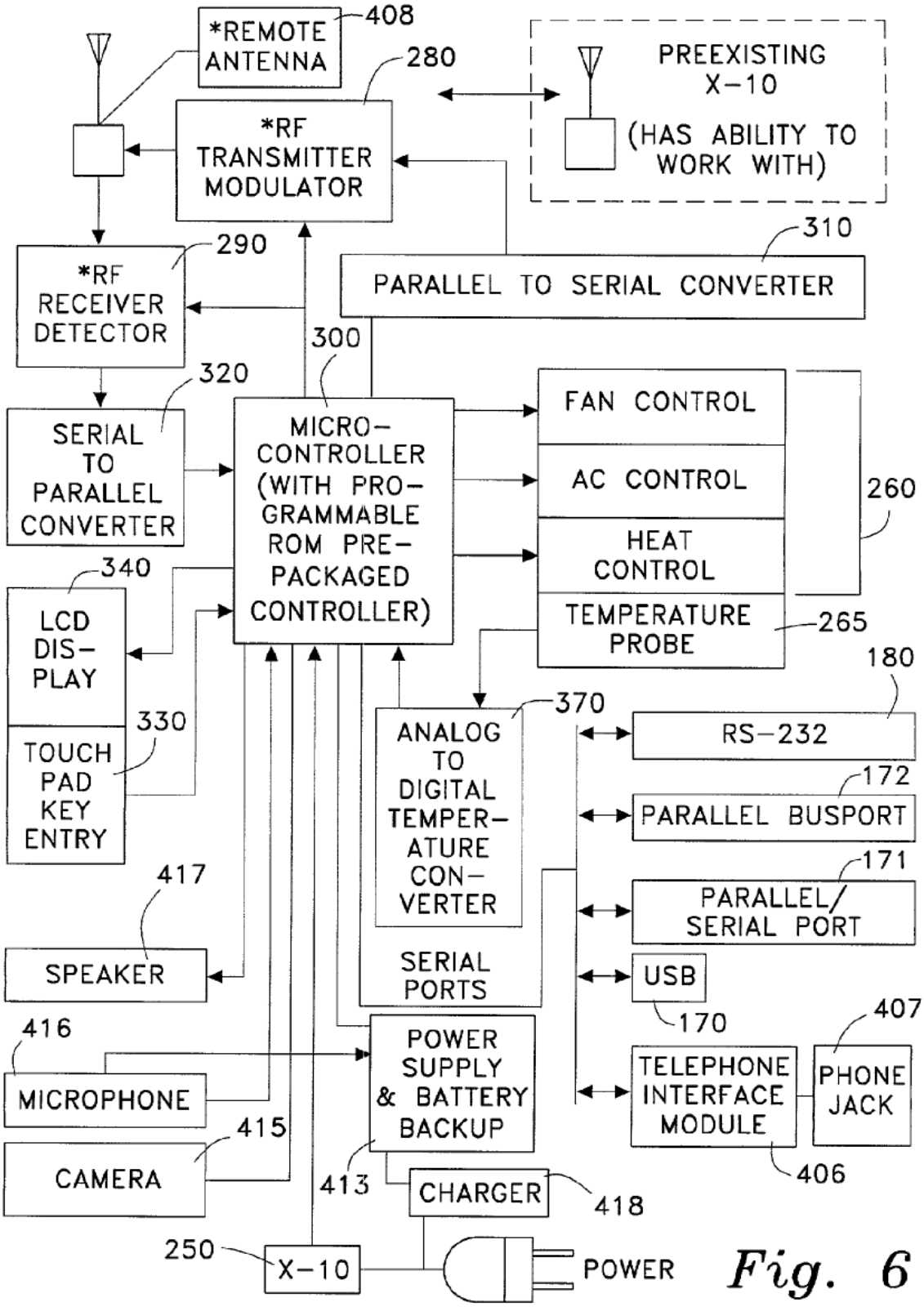

Fig. 6

Id., Figure 6.

F. *Williamson* (EX1010)

Williamson (U.S. Patent No. 7,133,739) entitled "Intelligent Microwave Oven" was filed May 2, 2003 and published on March 25, 2004. EX1010, Cover. *Williamson* is prior art at least under pre-AIA 35 U.S.C. §§ 102(a) and (e). *Williamson* was not considered during prosecution of the '825 Patent. EX1003. *Williamson* teaches setting a clock by receiving the correct time over the Internet—a second option to reset the clock according to Claims 11/14. EX1002, ¶¶97-100.

Williamson "[keeps] a real-time clock synchronized and correctly set by receiving period time synchronization messages." EX1010, Abstract, 4:36-37.

G. *Toth* (EX1012)

Toth (U.S. Patent No. 6,318,639) was filed October 15, 1999 and published on November 20, 2001. EX1012, Cover. *Toth* is prior art at least under pre-AIA 35 U.S.C. §§ 102(a), (b) and (e). *Toth* was not considered during prosecution. EX1003. *Toth* teaches a thermostat with a vacation mode. EX1012, Abstract.

IX. THE ASSERTED GROUNDS OF INVALIDITY

A. Ground 1: Claims 1 and 4 are obvious over *Rosen* in view of *Cacciatore*, and *Shigeaki*

1. Motivation to Combine

i. Rationale and motivation for combining *Rosen* with *Cacciatore*

Cacciatore is provided in an abundance of caution. Its inclusion concerns the "means coupling suitable power for energizing said thermostat from said space

conditioning equipment to said thermostat" element of Claim 1/11. Petitioner contends this element is disclosed by *Rosen* and would be obvious in light of admissions in the '825 Patent. EX1002, ¶103. To the extent the Board disagrees with Petitioner or with Patent Owner's claim construction, *Cacciatore* supplies this element.

Rosen discloses supplying power to its thermostat system from space conditioning equipment and thus discloses the claimed function. EX1002, ¶104; EX1004, ¶0020. A POSITA would understand that *Rosen* is teaching to obtain power from the space conditioning equipment to which is connected and that this occurs via a power line. EX1002, ¶104. Thermostats have traditionally been powered by using wiring (a power line) to connect a power source in space conditioning equipment to the thermostat. EX1001, 5:3-5. Power is "conventionally supplied from the space condition equipment 3 via a line 30 through an isolation diode 33." *Id*. Given this admission, a POSITA would understand *Rosen* to be teaching to power the thermostat by connecting it via a "line" to the space conditioning equipment. EX1002, ¶105. To the extent Patent Owner contends this element is missing from *Rosen*, then this element is within the general knowledge of a POSITA and Petitioner may rely upon Patent Owner's admission quoted above in the '825 Patent to "supply a missing claim element." *Qualcomm Inc. v. Apple Inc.*, 24 F.4th 1367, 1376 (Fed. Cir. 2022); *see also McCoy v. Heal Sys.*,

LLC, 850 F. App'x 785, 789 (Fed. Cir. 2021); EX1002, ¶105. Thus, *Rosen* discloses this element and even if it didn't, it would be obvious to use what is admitted as "conventional" in the specification to supply power.

If the Board disagrees or determines that an "isolation diode" to protect the backup battery is part of the corresponding structure, then it would be obvious to use a line to connect the thermostat to the power source and protect the backup battery with an isolation diode. EX1002, ¶106. Again, the '825 Patent, in the passage quoted above, teaches that the power is "conventionally supplied" using a power line and an isolation diode to protect the battery. EX1001, 5:3-5. Again, Petitioner can rely upon this admission the common knowledge of a POSITA. Inventor Rosen agrees this arrangement is prior art. EX1013, 96:9-97:6. It is obvious to use this prior art method of supplying power. EX1002, ¶¶106, 112.

But if the Board disagrees with all of the above, then the power line and isolation diode to protect the battery is obvious to use given the teachings of *Cacciatore*. *Id.*, ¶107. As an initial matter, *Rosen* and *Cacciatore* are in the same field of endeavor and are therefore analogous art to the '825 Patent and each other. *Id.*, ¶107.

A POSITA would have been motivated to combine *Cacciatore* with *Rosen*. *Id.*, ¶109. A POSITA would look to prior art methods of powering a thermostat. *Cacciatore* is one such reference.

Cacciatore powers its thermostat with "an external alternating current power source of the temperature conditioning system and utilizing conventional existing wiring." EX1005, Abstract. The "temperature conditioning system" is what is controlled by the thermostat and a POSITA would understand that to be a furnace, air conditioning unit or heat pump. EX1005, Abstract, 1:18-22; EX1002, ¶108. *Cacciatore* discloses "a terminal … that is connected to the common 28 volt AC supply line of the temperature conditioning system." EX1005, 5:23-27; *see also id*., Abstract, 2:14-15, 6:16-21. This teaches connection via a power line (wiring). EX1002, ¶108. Moreover, *Cacciatore* also discloses protecting a backup battery via an isolation diode—the identical or equivalent structure under a different claim construction. EX1005, Figure 2, 6:48-58. A POSITA would have recognized that *Cacciatore's* power supply configuration is suitable for use in *Rosen's* thermostat. EX1002, ¶¶108, 113.

Based on *Cacciatore's* disclosure that the configuration it describes provides a means for "simply and effectively providing" operating power to a thermostat system, a POSITA would have been motivated to modify *Rosen* to use the power line and isolation diode taught by *Cacciatore* to supply energizing power. *Id*., ¶109. Modifying *Rosen* to incorporate *Cacciatore's* teachings would merely involve the application of a known technique (supplying power to a thermostat system from space conditioning equipment using a power line and protecting a battery with an

isolation diode as taught by *Cacciatore*) to a known device (the thermostat system of *Rosen*) to obtain predictable results (a thermostat system that receives energizing power from space conditioning equipment). *Id*., ¶110.

A POSITA would have had a reasonable expectation of success in making the combination. *Id*., ¶111. It was conventional to supply power using such structure so a POSITA would just be using prior art structure to supply power. *Id*., ¶111; EX1004, ¶0020; EX1001, 5:3-5; EX1013, 96:9-97:6.

ii. Rationale and motivation for combining *Rosen* as modified by *Cacciatore* with *Shigeaki*

Rosen does not disclose the limitations of Claim 1 concerning the storage of time in a non-volatile memory and putting that stored time into the real time clock after power is restored. *Shigeaki* discloses these limitations and it would be obvious to combine *Shigeaki* with *Rosen*. EX1002, ¶114. Specifically, *Shigeaki* discloses the precise method claimed in Claim 1 to reset the real time clock after a power outage: "When a power outage occurs, the time data pertaining to the current time is stored in E^2PROM 2, and when power is restored, the time data is read from E^2PROM 2, and the time is resumed from the current time corresponding to the retrieved time data." EX1006, ¶0061; EX1002, ¶114.

Rosen and *Shigeaki* are analogous art. EX1002, ¶115. Both *Rosen* and *Shigeaki* disclose devices with real-time clocks that store time information. EX1004, Abstract; EX1006, ¶0002.

Shigeaki provides two motivations to use its invention in a thermostat: (1) less time and effort to adjust the clock after a power outage and (2) saving the cost of a backup battery. EX1006, ¶¶0025-0026, 0063; EX1002, ¶116. Eliminating the need for a capacitor or backup battery is precisely what the '825 Patent discloses as an advantage of the invention. *E.g.*, EX1001, 3:30-31. Thus, a POSITA would have been motivated to use the method of restoring the clock after a power outage both to make the clock easier to reset and to eliminate the need for a backup power source to avoid costs. EX1002, ¶¶116, 121-126.

Keeping the clock of a thermostat as accurate as possible when power is restored after a power outage was a recognized problem for thermostats. EX1001, 2:18-55; EX1002, ¶117. Inventor Rosen acknowledged that prior art thermostats addressed this problem. EX1013, 75:8-25. A POSITA would consider all available prior art methods to address that problem and thus would turn to *Shigeaki* as one design choice to solve the problem. EX1002, ¶117. Inventor Rosen agreed that a POSITA had various methods to choose from to keep the time as accurate as possible after a power failure. EX1013, 76:11-18. Given that *Shigeaki* provides a method to do so with identified advantages, it would be obvious to use the method of *Shigeaki* in the thermostat of *Rosen*. EX1002, ¶117; *see also Intel Corp. v. Pact XPP Schweiz AG*, 22-1037 (CAFC Mar. 13, 2023) at 13 (Nothing more than showing a known problem in the art, a reference in the art that helped address the issue, and

that the combined teachings weren't beyond a POSITA is required to show a motivation to combine).

Modifying *Rosen* to incorporate the non-volatile memory disclosed in *Shigeaki* would merely involve the application of a known technique (the use of non-volatile memory as taught by *Shigeaki*) to a known device (*Rosen's* thermostat system) ready for improvement to yield predictable results (a thermostat system with improved functionality in the case of power outages). EX1002, ¶166. Non-volatile memory was commonly used in prior art thermostats for preserving data in a power outage, such as retaining temperature setting and schedule data for automatically changing the temperature. *Id.*, ¶¶72-74, 166.

A POSITA would have had a reasonable expectation of success in making the combination. *Id.*, ¶118. As an initial matter, non-volatile memory is a conventional well-known component, and its use in thermostat systems is well-known. *Id*. Writing data into and reading data from non-volatile memory is also a conventional technique commonly known to a POSITA and used in thermostat systems in the prior art. *Id*.

A POSITA would have had a reasonable expectation of success in making the combination because, *Rosen* explains that "integrated circuit chips including all the processor components with all the necessary interface conditioning circuits are available off-the-shelf" and that "[t]he subject invention only requires the

capabilities of such a processor, and off-the-shelf integrated circuit processor chips may be used to advantage in the subject thermostat system." EX1004, ¶0023; EX1002, ¶119. Non-volatile memories, such as EEPROMs, are available off the shelf and had been used in the thermostats for a few years prior to the filing of the '825 Patent. EX1018, 16:4, Figure 22b (disclosing flash memory in a thermostat as early as October 22, 2002); EX1002, ¶119; EX1006, ¶0065; EX1019, 7:29-32. Because the systems of *Rosen* and *Shigeaki* utilize commercially available, off-the-shelf components, and known techniques it would have been well within the abilities of a POSITA to modify *Rosen's* thermostat system to include the non-volatile memory of *Shigeaki* and its associated control program functionality. EX1002, ¶120; EX1013, 97:21-99:12.

2. Claim 1

Each of the eleven elements 1[pre]-1[j] are disclosed by *Rosen*, as discussed below. However, to the extent Patent Owner disagrees, each of these elements is also common knowledge of a POSITA as admitted by the '825 Patent and its inventor. EX1001, 1:24-2:22, Figure 1, 3:54-57, 4:10-5:17; EX1013, 97:21-99:9; EX1002**,** ¶¶127-134. Petitioner may rely upon Patent Owner's admissions in the '825 Patent to "supply a missing claim element." *Qualcomm Inc.*, 24 F.4th at 1376. This paragraph provides an alternative basis for obviousness with respect to each of elements 1[pre]-1[j] below.

i. 1[pre]

If the preamble is limiting, *Rosen* discloses it. EX1002, ¶¶135-136. *Rosen* discloses "[a] programmable thermostat for controlling space conditioning equipment." EX1004, Abstract, Title, ¶¶0001, 0003-0005, 0007, 0024, Claim 1.

ii. 1[a]

Rosen or *Rosen* coupled with the general knowledge of a POSITA, or *Rosen* in combination with *Cacciatore* discloses element 1[a]. EX1002, ¶137-148. The disclosure of this claim element is discussed above in Section IX.A.1.i.

iii. 1[b]

Rosen discloses element 1[b]. EX1002, ¶¶149-153. *Rosen* discloses "a touch screen, for interactive intuitive interface with a user to facilitate programming the thermostat system." EX1004, ¶¶0001, 0024. *Rosen* displays "[d]ifferent menus [that] can place [] buttons and messages in various positions on the touch screen to facilitate intuitive programming of the thermostat system." *Id*., Abstract; *see also* Figures 3-5, 8-9, ¶¶0012-0018, 0028, 0029, 0032; EX1002, ¶150. Accordingly, *Rosen* discloses element 1[b]. EX1002, ¶¶149-153.

iv. 1[c]

Rosen discloses element 1[c]. EX1002, ¶¶154-156. *Rosen* discloses that the "programmable thermostat system" includes "a temperature sensor for providing an electrical signal indicative of the temperature of a conditioned space," as recited in element 1[c]. EX1004, ¶0007; *see also id.*, Claim 1, Figure 1, ¶0022; EX1002,

¶156.

v. 1[d]-1[g]

Rosen also discloses elements 1[d]-1[g]. EX1002, ¶157-158. *Rosen* discloses that its "programmable thermostat system for controlling space conditioning equipment according to the invention includes … a processor including: a central processing unit; a real time clock; a memory coupled to the central processing unit for storing program and data information; and an input/output unit coupled between the processor and said touch screen for carrying out information transfer therebetween." EX1004, ¶0007. More particularly, *Rosen's* Figure 1 illustrates "a thermostat system" that "includes a processor 1." *Id.*, ¶0019. "The processor 1 includes a central processing unit (CPU) 9 in communication with a memory 8 for storing data and program information and also, via an input/output unit (I/O unit) 10, a touch pad 11 and a liquid crystal display (LCD) 12..." *Id.*, ¶0020. *Rosen* discloses a processor (element 1[d]), including a central processing unit (element 1[e]), a memory for storing program and data information (element 1[f]), and an input/output unit (element 1[g]) as shown in annotated Figure 1 below:

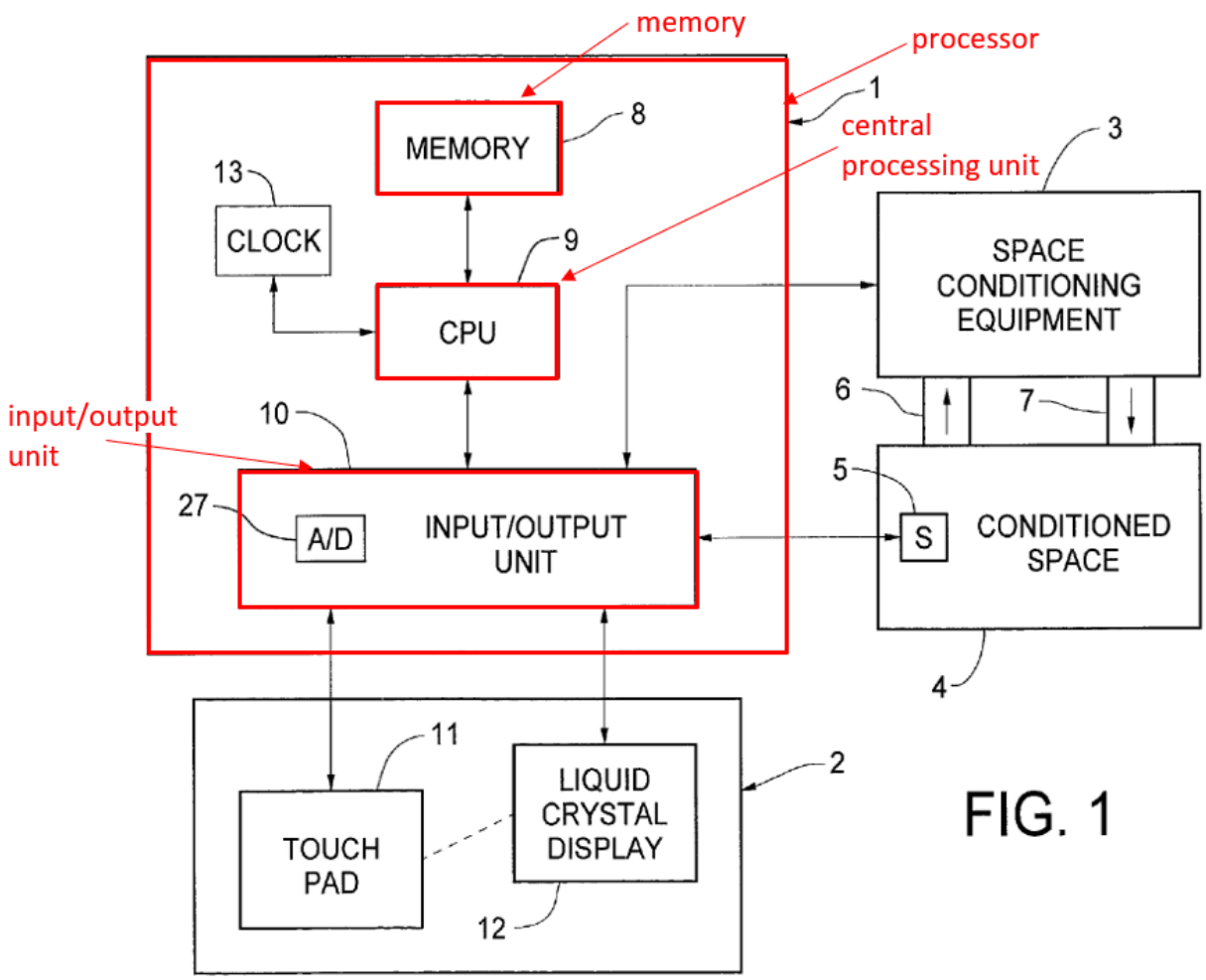

Id., Figure 1 (annotated); *see also id.*, Claims 1, 17. As can be seen from Figure 1 above, "memory 8" is coupled to central processing unit 9. *See id.*, Figure 1; *see also id.*, ¶0020; EX1002, ¶158. The memory of *Rosen* is a "first memory" as claimed. EX1002, ¶158. Thus, *Rosen* discloses elements 1[d]-1[g]. *Id.*, ¶¶157-158.

vi. 1[h]-1[j]

Rosen discloses elements 1[h]-1[j]. *Id.*, ¶¶159-161. As discussed above for element 1[g], *Rosen* discloses the claimed input/output unit. *Supra*, § IX.A.2.v;

EX1004, Figure 1, ¶0007; EX1002, ¶¶157-158. *Rosen's* input/output unit includes the features recited in elements 1[h]-1[i]. For instance, *Rosen's* Claim 1 and Claim 11 disclose elements 1[h] and 1[i] verbatim. EX1002, ¶159; EX1004, Claims 1 and 11. These features of *Rosen's* input/output unit are shown in annotated Figure 1 below:

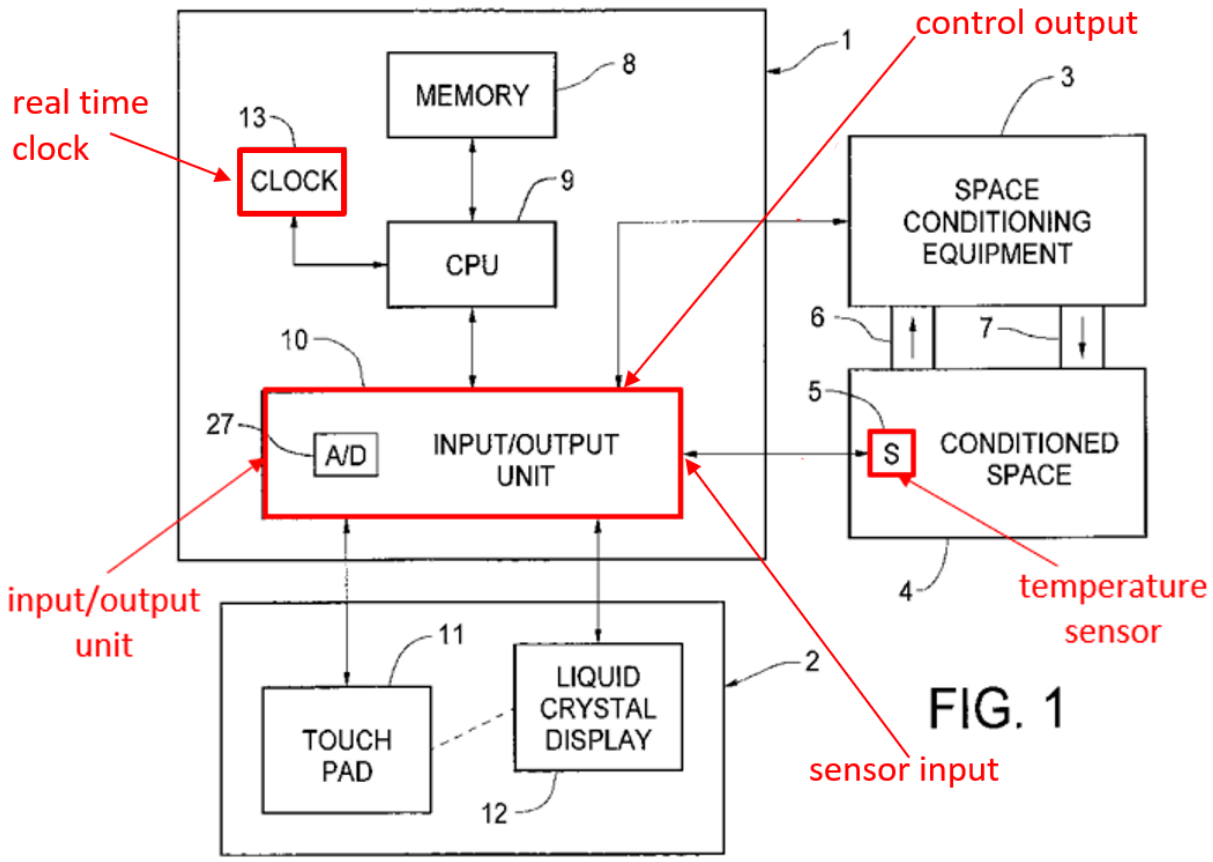

FIG. 1

EX1004, Figure 1 (annotated); EX1002, ¶159; EX1004, ¶0022.

Rosen also discloses element 1[j]. EX1002, ¶¶161, 50. *Rosen* discloses "[a] programmable thermostat system for controlling space conditioning equipment includ[ing] … a real time clock." EX1004, Abstract; *see also id.*, ¶0020 and

annotated Figure 1 above.

vii. 1[k]

Rosen in combination with *Shigeaki* discloses element 1[k]. EX1002, ¶¶162-166. *Rosen* does not disclose a ***non-volatile*** random access memory. Non-volatile memory was well known in the art well before the priority date of the '825 Patent, including for use in thermostats. EX1002, ¶¶162-166, 72-74; EX1013, 103:4-14. It was known to a POSITA prior to the claimed invention that the purpose of a non-volatile memory is to retain the contents of the memory even when no power is supplied to the memory. EX1002, ¶163; EX1013, 104:14-25. It is not surprising that *Shigeaki* discloses this aspect of Claim 1.

Shigeaki discloses "a semiconductor non-volatile memory capable of storing data and electrically rewriting the stored data" as well as a "data reading means [that] reads time data and power outage data from the semiconductor non-volatile memory" when power is recovered after a power outage. EX1006, Claim 1, ¶0014; *see also id*., Claim 2, ¶¶0007-0008. Specifically, *Shigeaki* discloses an EEPROM for this purpose. EX1006, ¶¶0033, 0061 (referred to as E^2PROM 2); EX1002, ¶164.

When *Shigeaki's* teachings are applied to *Rosen*, in the combined system a non-volatile random access memory as taught by *Shigeaki* is added to store the clock information and retain it during a power outage. EX1002, ¶165. As described

above in Section IX.A.1.ii, it would have been obvious to a POSITA to combine *Shigeaki's* teachings of using non-volatile memory and its method of handling time during a power outage with *Rosen's* programmable thermostat system to arrive at the claimed invention. EX1002, ¶¶165, 114-126.

viii. 1[l]-1[n]

Rosen in combination with *Shigeaki* discloses elements 1[l] -1[n]. *Id.*, ¶¶167-177. *Rosen* discloses a "control program stored in the memory" of a thermostat system. EX1004, ¶0003; *see also id.*, Claim 1. *Shigeaki* discloses a control program with the capabilities of elements 1[m]-1[n].

As discussed above for element 1[j], the thermostat system of *Rosen* includes a "real time clock." *Supra*, § IX.A.2.vi; EX1002, ¶161. As discussed above for element 1[k] *Shigeaki* discloses a non-volatile memory. *Supra*, § IX.A.2.vii; EX1002, ¶¶162-166.

Shigeaki discloses a "semiconductor non-volatile memory capable of storing data and electrically rewriting the stored data." EX1006, Claims 1-2, ¶¶0007-0008. The "data storage means" of *Shigeaki* "stores the current time… in the semiconductor non-volatile memory as the current time data and power outage data." *Id.*, ¶13, Claims 1-2, ¶¶0007-0008, 0039. A POSITA would understand that such storage occurs due to action by a control program, or at the very least that this is obvious. EX1002, ¶171.

Shigeaki further discloses that when "a power outage of the commercial power supply is restored, … the data reading means reads time data and power outage data from the semiconductor non-volatile memory." EX1006, ¶¶0014, 0040. The data from the non-volatile memory is used to update the clock. *Id*., ¶¶0014-0015.

The summary of what the control program of *Shigeaki* does is synonymous with elements 1[m]-1[n]. "When a power outage occurs, the time data pertaining to the current time is stored in E^2PROM 2, and when power is restored, the time data is read from E^2PROM 2, and the time is resumed from the current time corresponding to the retrieved time data." EX1006, ¶0061. A POSITA would understand that *Shigeaki* discloses "periodic" storage and that the steps described in the prior paragraph are accomplished by a control program. EX1002, ¶173.

As described above in Section IX.A.1.ii, it would have been obvious to combine *Shigeaki* and *Rosen.* EX1002, ¶¶174, 114-126. The combination of *Shigeaki* and *Rosen* discloses and suggests to a POSITA elements 1[m]-1[n]. EX1002, ¶¶167-174.

3. Claim 4

The *Rosen-Cacciatore-Shigeaki* combined system discloses all elements in Claim 1 for the reasons discussed above for Claim 1. *Rosen* discloses the new elements of Claim 4. *Supra*, § IX.A.2; EX1002, ¶¶178-179. It was "well known" that thermostat systems often included a vacation mode. EX1001, 1:60-61;

EX1002, ¶¶178-179.

Rosen discloses a program that "may [] include a 'vacation' mode which employs different set points when the conditioned space is not occupied for an extended period." EX1004, ¶¶0003, 0035; *see also* ¶0004, Figures 4, 11-12; EX1002, ¶¶179, 52. *Rosen* thus discloses each additional limitation of Claim 4. EX1002, ¶¶178-179.

B. Ground 2: Claims 11-13 and 16 are obvious over *Rosen* in view of *Cacciatore*, and *Carey*

1. Claim 11

i. 11[pre]-11[j]

Elements 11[pre]-11[j] are identical to elements 1[pre]-1[j] and are thus disclosed in the same manner as described in Sections IX.A.2.i-vi for elements 1[pre]-1[j]. *Id.*, ¶181. For clarity, each of these elements is also common knowledge of a POSITA as admitted in the '825 Patent as explained in the introduction to Claim 1 above. *Supra*, § IX.A.2; EX1002, ¶¶127-134. Also, the analysis above in Section IX.A.1.i regarding combining *Rosen* with *Cacciatore* applies to element 11[a] here as well. *See also* EX1002, ¶¶103-113.

ii. 11[k]

Rosen in combination with *Carey* discloses element 11[k]. EX1002, ¶¶182-187. Claim 11 is directed to a thermostat with a second method to try to maintain the time as accurately as possible in the event of a power outage. The second

method, however, is also disclosed in the prior art—e.g., by *Carey*. Using receivers adapted to receive time and date information from an external source to update the real time clock was "well known in the art." EX1001, 6:13-24; EX1002, ¶182. Apparently the inventor was unaware that the prior art discloses the use of such receivers for thermostats.

As discussed above, *Rosen* discloses a real-time clock. *Supra*, § IX.A.2.vi. *Carey* discloses element 11[k]. EX1002, ¶¶183-187. Like the '825 Patent (EX1001, Abstract), *Carey* discloses a thermostat that "automatically set[s] the current time and date using information broadcasted by station ***WWVB***." EX1007, ¶0004 (emphasis added); *see also id.*, Abstract. *Carey's* thermostat includes an "antenna 22 [] tuned to receive a 60 kHz time code signal broadcast from station WWVB in Fort Collins" and "a receiver integrated circuit 24 [that] detects and amplifies the time code signal." EX1007, ¶¶0008-0009. Once *Carey's* system receives a time signal, "the minutes, hours, day, and year information are stored into the [] RAM memory." *Id.* *Carey's* system then "loads the information from RAM memory into the local clock controlled by the microprocessor." *Id.* This process is outlined in Figure 2 of *Carey*, annotated below:

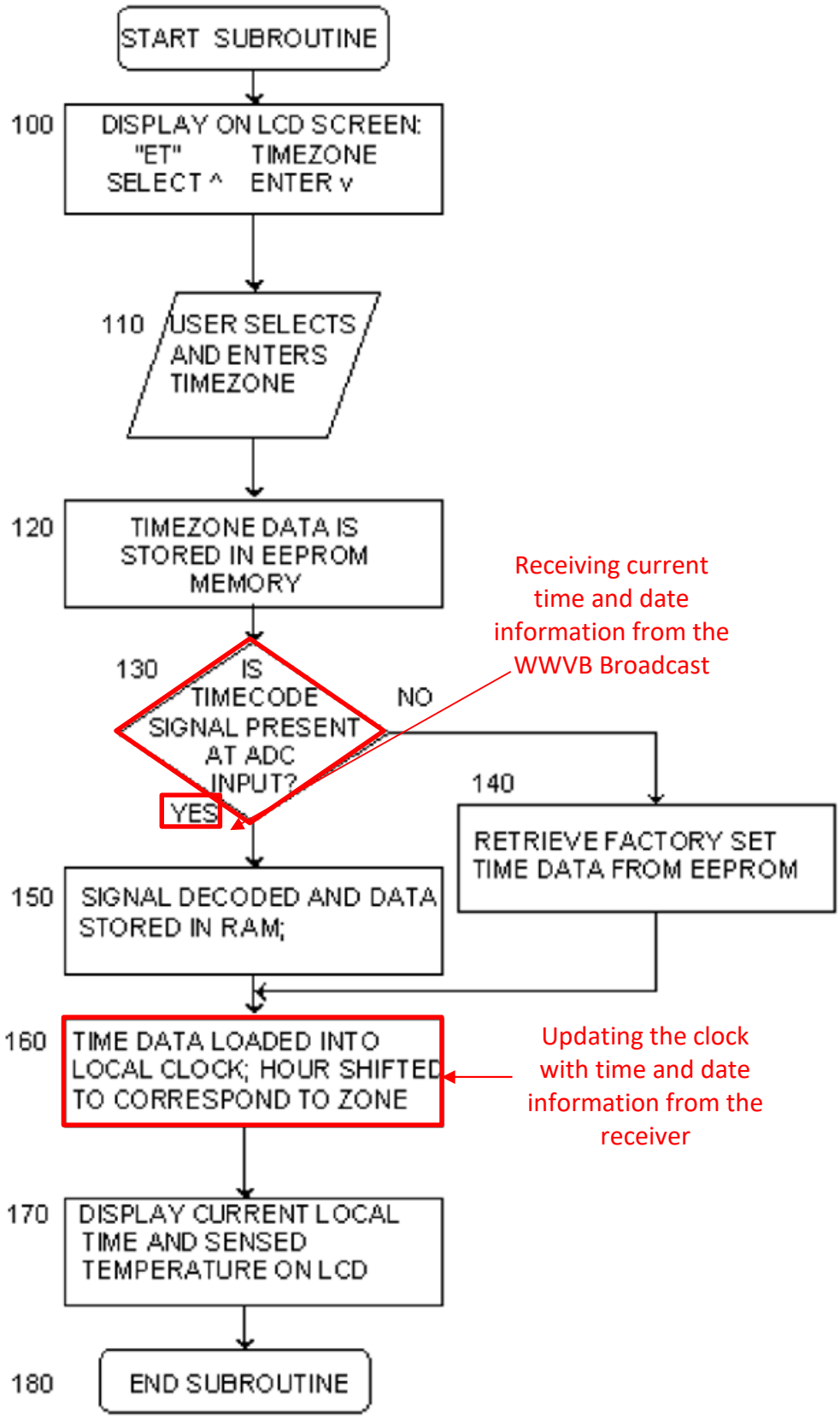
START SUBROUTINE
100
DISPLAY ON LCD SCREEN:
"ET" TIMEZONE
SELECT ^ ENTER v
110
USER SELECTS AND ENTERS TIMEZONE
120
TIMEZONE DATA IS STORED IN EEPROM MEMORY
130
IS TIMECODE SIGNAL PRESENT AT ADC INPUT?
NO
YES
Receiving current time and date information from the WWVB Broadcast
140
RETRIEVE FACTORY SET TIME DATA FROM EEPROM
150
SIGNAL DECODED AND DATA STORED IN RAM;
160
TIME DATA LOADED INTO LOCAL CLOCK; HOUR SHIFTED TO CORRESPOND TO ZONE
Updating the clock with time and date information from the receiver
170
DISPLAY CURRENT LOCAL TIME AND SENSED TEMPERATURE ON LCD
180
END SUBROUTINE

FIG. 2

Id., Figure 2 (annotated).

Carey's microprocessor controls the local clock and "includes a digital input port pin, for decoding the time signal from the receiver 24," such that the receiver is coupled to the clock, as shown below in annotated Figure 1. *Id.*, ¶0008-0009; EX1002, ¶186.

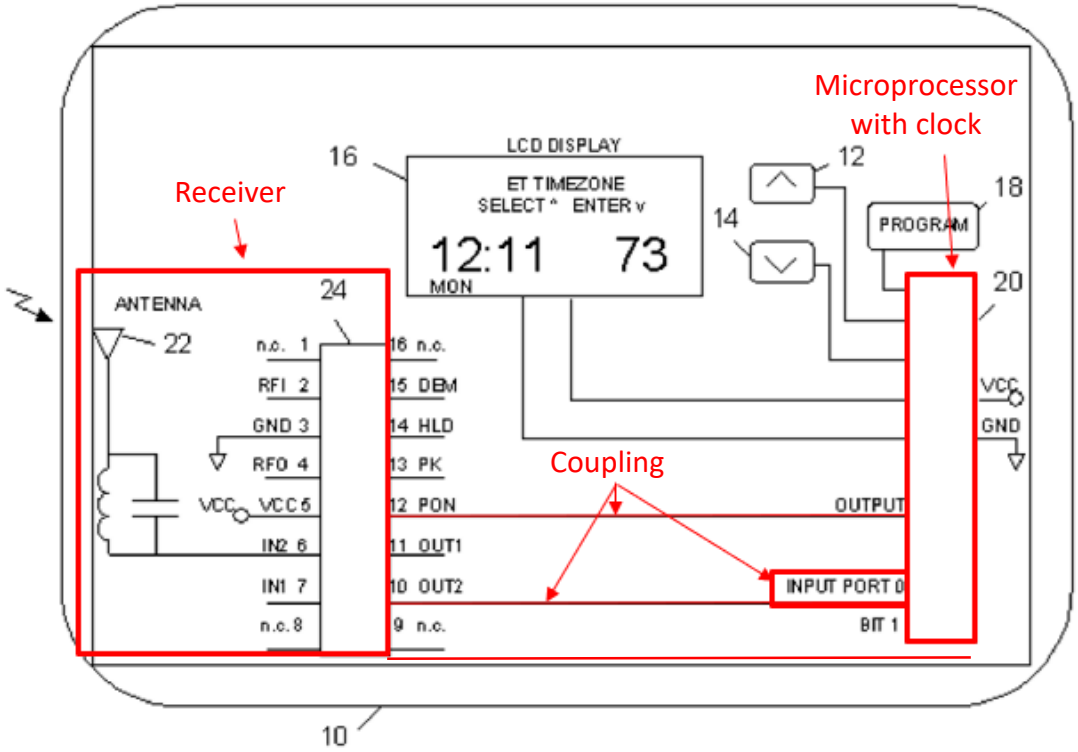

FIG. 1

EX1007, Figure 1 (annotated).

Carey's receiver (WWVB antenna 22 along with integrated circuit receiver 24) is adapted to receive current time and date information from an external source of the current time and date (the transmitter of the WWVB broadcasted time code signal), said receiver being coupled via pins 10 and 12 of integrated circuit receiver

24 to said real time clock (coupled to the clock via the input port of microprocessor 20 and the RAM) such that the time and date information thereof is updated from said receiver (loading minutes, hours, day, and year information stored in RAM memory into the clock). EX1007, ¶0009. Accordingly, the combination of *Carey* and *Rosen* together disclose each and every element of 11[k]. EX1002, ¶¶182-187.

(a) Rationale and motivation for combining *Rosen* and *Carey*

It would have been obvious to a POSITA to combine *Carey's* receiver with *Rosen's* programmable thermostat system. EX1002, ¶¶188-196.

Indeed, modifying the thermostat system of *Rosen* to incorporate the receiver of *Carey* would merely involve the simple addition of a known element (the receiver integrated circuit of *Carey*) for a generally known function (receiving time and date information from an external source) to obtain predictable results (a thermostat system with a receiver adapted to receive current time and date information from an external source to update the time and date of the thermostat system). *Id.*, ¶188.

Rosen and *Carey* are analogous art. *Id.*, ¶189. Both *Rosen* and *Carey* relate to thermostats. EX1004, Abstract; EX1007, Abstract; EX1001, Title, Abstract.

Keeping the clock of a thermostat as accurate as possible when power is restored after a power outage was a recognized problem for thermostats. *Supra*, § IX.A.1.ii. A POSITA would consider all available prior art methods to address that problem and thus would turn to *Carey* as one design choice to solve the problem.

EX1002, ¶190. Inventor Rosen agreed that a POSITA had various methods to choose from to keep the time as accurate as possible after a power failure. EX1013, 76:11-17; EX1002, ¶190. Given that *Carey* provides a method to do so with identified advantages, it would be obvious to use the method of *Carey* in the thermostat of *Rosen*. EX1002, ¶190. A POSITA would further understand from *Carey* that if the WWVB receiver was used, the receiver could be used to automatically reset the time after a power failure. *Id*.

Carey explains a problem with thermostat programs is that they "require[] the user to complete a complex series of steps." EX1007, ¶0001. *Carey* discloses a technique to "simplif[y] programming by setting the time for the user." *Id*., ¶0003. A POSITA would have been motivated to incorporate *Carey's* receiver in order to improve upon the *Rosen* thermostat by making it easier to set the time. EX1002, ¶191.

Incorporating the aforementioned technique of *Carey's* thermostat system would provide a better experience to the users of *Rosen's* thermostat system because they would not have to engage in the multi-step process *Rosen* describes to "set the present time." EX1004, ¶0034. This streamlines the programming of the *Rosen* thermostat and would "allow a user to easily initiate a single set back program without having to set the current time and date." EX1007, ¶0004.

A POSITA would have had a reasonable expectation of success in making the

combination. EX1002, ¶193. Using *Carey's* clock reset technique would only require the addition of conventional, well-known components, e.g., antenna and receiver, to the *Rosen* system which the '825 Patent concedes can be readily incorporated into a thermostat. *Compare* EX1007, Figure 1 *and* EX1004, Figure 1; *see also* EX1001, 6:12-17; EX1002, ¶193. A POSITA would understand that antennas and receivers were commonly known, and particularly, were included in thermostats. EX1002, ¶¶193, 75-78; *see also* EX1007, ¶0009. Using such known hardware to receive WWVB signals and update time and date information is a conventional technique commonly known to a POSITA and used in thermostats. EX1002, ¶193.

Given the similarities of *Rosen* and *Carey*, a POSITA would have understood that *Carey's* techniques were suitable for application with *Rosen's* thermostat system. *Id.*, ¶194. It would have been well within the abilities of a POSITA to modify *Rosen's* thermostat system to include the antenna and receiver of *Carey* and to couple the receiver of *Carey* to the already-present real time clock under control of the processor of *Rosen*. *Id.*

Rosen further explains that "integrated circuit chips including all the processor components with all the necessary interface conditioning circuits are available off-the-shelf" and that "[t]he subject invention only requires the capabilities of such a processor, and off-the-shelf integrated circuit processor chips may be used to

advantage in the subject thermostat system." EX1004, ¶0023. *Carey* also uses parts off the shelf. EX1007, ¶0008. Because the systems of *Rosen* and *Carey* utilize available, off-the-shelf components, and known techniques, a reasonable expectation of success is evident. EX1002, ¶196.

2. Claim 12

The *Rosen-Cacciatore-Carey* combined system discloses Claim 12 for the reasons discussed in Section IX.B.1 for Claim 11. *Supra*, §IX.B.1. The system disclosed in *Carey* includes a receiver that receives a "60kHz time code signal broadcast from station WWVB in Fort Collins." EX1007, ¶0008. *Carey's* WWVB signals are wireless signals. EX1002, ¶¶197-198.

3. Claim 13

The *Rosen-Cacciatore-Carey* combined system discloses Claim 13 for the reasons discussed above for Claim 12. EX1002, ¶199-201. *Rosen* discloses a thermostat with a vacation mode of operation as discussed above in Section IX.A.3. *Supra*, §IX.A.3. Thus, the combination includes a vacation mode.

4. Claim 16

Claim 16 includes the vacation mode elements disclosed in Claim 13 and is thus disclosed in the same manner as described in Section IX.B.3 for Claim 13. *Supra*, §IX.B.3; EX1002, ¶202.

C. Ground 3: Claims 11 and 14-16 are obvious over *Rosen* in view of *Cacciatore*, and *Williamson*

This ground is included because the dependent claims of Claim 11 include two separate options for the signals received by the "receiver"—wireless signals in Claims 12 and 13 and signals from the Internet in Claims 14 and 15.

1. Claim 11

i. 11[pre]-11[j]

The analysis for elements 11[pre]-11[j] is identical to the analysis for Ground 2 as set forth in Section IX.B.1.i above. *Supra*, §IX.B.1.i; EX1002, ¶205.

ii. 11[k]

Rosen in combination with *Cacciatore* and *Williamson* discloses element 11[k]. EX1002, ¶¶206-214.

As discussed above with respect to element 1[j], *Rosen* discloses a real-time clock. *Supra*, § IX.A.2.vi; *see also* EX1004, Abstract, ¶0020; EX1002, ¶207. *Williamson* discloses element 11[k].

Williamson "relates to [the] configuration of an appliance network" such that a "synchronization automatically … assures all clocks report the correct time." EX1010, 1:16-19, 2:12-13. The *Williamson* system discloses a receiver: an intelligent controller that receives time messages from a web server. *Id*., 2:8-12. *Williamson's* intelligent controller is "in communication with a web server 104 via a modem (or via a broadband connection)" and may "connect[] through an internet

service provider and may even use a cable modem or DSL router to connect with the Internet" such that the intelligent controller receives information from an external source. *Id.*, 4:4-6, 4:37-40; *see also id.*, 10:27-31, 2:2-5, 4:4-7, Figure 1.

Williamson explains that time messages are specifically received at the modem. *Id.*, 8:36-40. The intelligent controller includes a controller, a real-time clock, and a modem all coupled to each other. *Id.*, Figure 3, 8:36-37.

The real-time clock "receives time messages from the information controller 102, periodically … [and] then synchronizes to the time maintained by the intelligent controller 102." *Id.*, 24:10-15; *see also id.*, 8:36-40.

As seen in annotated Figure 3 of *Williamson* below, the real-time clock is coupled to the intelligent controller and modem. *Id.*, 7:16-23.

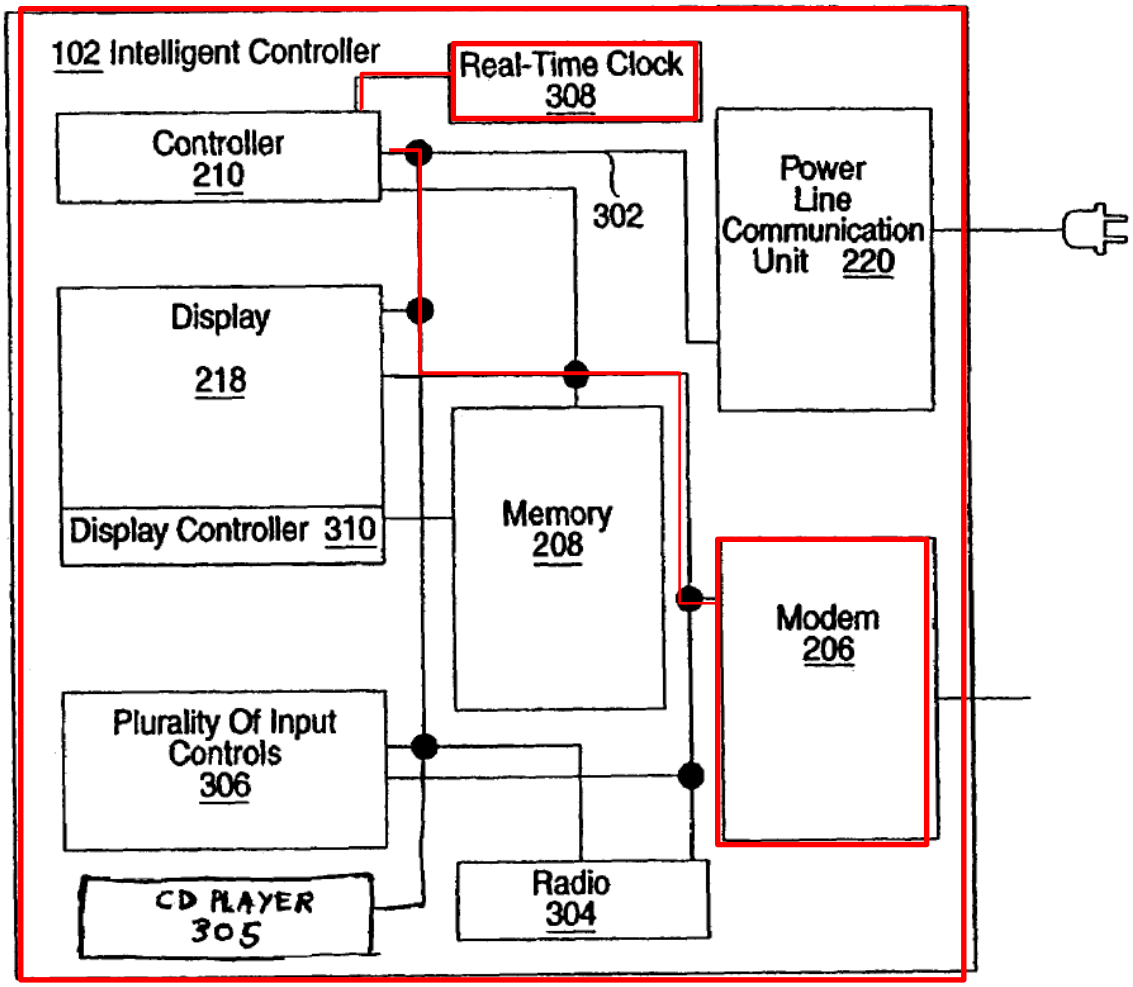

Fig. 3

Id., Figure 3 (annotated). A POSITA would understand that the time and date information received by the *Williamson* modem is current date and time information. EX1002, ¶212. Indeed, the "synchronization automatically corrects for time changes and ***assures all clocks report the correct time***." EX1010, 2:12-16 (emphasis added); *see also id.*, 8:46-48.

Williamson's receiver (e.g., intelligent controller 102 including modem 206) is adapted to receive current time and date information (e.g., time messages received at intelligent controller) from an external source of the current time and date (e.g., the Internet), said receiver (e.g., intelligent controller 102 including modem 206) being coupled to said real time clock (e.g., real-time clock 308) such that the time and date information thereof is updated from said receiver (the real-time clock is programmed in response to the time messages so that time is correctly maintained). *Compare* EX1010 *and* EX1001, Claim 11.

Accordingly, the *Rosen* system modified by *Williamson* discloses each and every element of 11[k]. EX1002, ¶¶206-214.

(a) Rationale and motivation for combining *Rosen* and *Williamson*

It would have been obvious to a POSITA to combine *Williamson's* receiver with *Rosen's* thermostat. *Id.*, ¶¶215-223.

Modifying *Rosen* to incorporate the receiver of *Williamson* would merely involve the simple addition of a known element (a means for connecting to an external network such as the modem disclosed by *Williamson*) for a generally known function (receiving time information from an external source) to obtain predictable results (a thermostat system with a receiver adapted to receive current time and date information from an external source to update the time and date of the thermostat system). *Id.*, ¶215.

Rosen and *Williamson* are analogous art. *Id.*, ¶216. Both *Rosen* and *Williamson* relate to programmable home appliances that contain real-time clocks. EX1004, ¶0001; EX1010, 1:15-16, 2:8-12; EX1001, Title.

Rosen discloses a multi-step process for setting the real-time clock. EX1004, ¶0034. *Williamson* explains a problem with appliances that include clocks: the "clocks [] must be initially set and reset after a power outage." EX1010, 1:44-46.

Williamson discloses a system that provides an advantage "by maintaining the correct time synchronization of real-time clock 308 with the correct time maintained at the web server 104." *Id.*, 8:46-48. A POSITA would have been motivated to incorporate *Williamson's* known time synchronization from an external source technique in order to improve upon the *Rosen* thermostat. EX1002, ¶218; EX1020, 9 n.10.

Incorporating the aforementioned technique of *Williamson's* thermostat system would improve *Rosen's* thermostat system by (a) automatically setting the clock for the user, thus saving the user time, and (b) automatically resetting the clock after a power outage thus maintaining the correct time shortly after power was restored. EX1002, ¶218. Use of *Williamson's* technique would "assure[that] all clocks report the correct time." EX1010, 2:13.

A POSITA would have had a reasonable expectation of success in making the combination. EX1002, ¶219. As an initial matter, implementing the known

technique of *Williamson* would only require the addition of conventional, well-known components, e.g., a modem, to connect *Rosen's* thermostat system to the Internet. *Compare* EX1010, Figure 3 *and* EX1004, Figure 1; EX1002, ¶219; EX1013, 44:24-45:20. Moreover, a POSITA would understand that devices that use the Internet to set the time on a clock were commonly known in the art, and particularly, were included in thermostat systems prior to the invention of the '825 Patent. EX1002, ¶220; *see also* EX1013, 123:6-124:2. Using known hardware to receive time from the Internet and update time and date information is a conventional technique commonly known to a POSITA. EX1002, ¶220.

Moreover, a POSITA would have had a reasonable expectation of success because both *Rosen* and *Williamson* employ off-the-shelf components. EX1002, ¶222; EX1004, ¶0023; EX1010, 4:24-44.

2. Claim 14

Rosen in combination with *Cacciatore and Williamson* discloses Claim 14. EX1002, ¶¶224-226. This combination discloses the elements of Claim 11 as set forth above in Section IX.C.1. As discussed above with respect to element 11[k], *Rosen* modified by *Williamson* discloses a receiver adapted to receive current time and date information from an external source over the Internet. *Supra*, § IX.C.1.ii. The system disclosed in *Williamson* includes a receiver that "connect[s] with the Internet" and maintains the correct time. EX1010, 4:36-40, 5:34-36, 7:38-42.

Thus, the receiver in *Williamson* receives current time and date information from the Internet, thereby disclosing the new limitation of Claim 14. EX1002, ¶225.

3. Claim 15

Rosen discloses Claim 15. EX1002, ¶¶227-229. The '825 Patent admits that the additional element of Claim 15 was known in the prior art. EX1001, 1:60-61.

The *Rosen-Cacciatore-Williamson* combination discloses the elements of Claim 14 as discussed in Section IX.C.2. EX1002, ¶¶224-226. *Rosen* discloses a thermostat with a vacation mode of operation as set forth in Section IX.A.3. EX1002, ¶¶178-179. Thus, the *Rosen-Cacciatore-Williamson* combination discloses all elements of Claim 15.

4. Claim 16

Claim 16 includes the vacation mode elements disclosed in Claim 15 and is thus disclosed in the same manner as described in Section IX.C.3 for Claim 15. EX1002, ¶¶229-230.

D. Ground 4: Claim 1 is obvious over *Shamoon* in view of *Cacciatore*, and *Shigeaki*

Grounds 1-3 each rely primarily on *Rosen* which was published on July 31, 2003. EX1004, Cover; *supra*, § IX.A-C. In the unlikely event *Rosen* is disqualified as prior art, Petitioner has included Grounds 4-9 which primarily rely on *Shamoon*, which was published on February 20, 2003 and is unquestionably prior

art. EX1008, Cover; *infra*, § IX.D-I.

1. Motivation to Combine

i. Rationale and motivation for combining *Shamoon* with *Cacciatore*

Cacciatore is provided in grounds involving *Shamoon* concerning the "means coupling" element of Claim 1/11. Petitioner contends this element is common knowledge in light of admissions in the '825 Patent. EX1001, 5:3-5. To the extent the Board disagrees with Petitioner or with Patent Owner's claim construction, *Cacciatore* supplies this element. EX1002, ¶232. While *Shamoon* teaches the ability to remote control a thermostat, it indicates "[t]he wall thermostat controller of the invention uses the same operating system as the handheld controller, has similar hardware, and performs pretty much the same." EX1008, ¶0040.

Thermostats have traditionally been powered by using wiring (a power line) to connect a source of power in the space conditioning equipment to the thermostat. EX1002, ¶105. The '825 Patent teaches that power is supplied "in accordance with the prior art." EX1001, 5:3. Power is "conventionally supplied from the space condition equipment 3 via a line 30 through an isolation diode 33." *Id.*, 5:3-5. Given this admission, this element is within the general knowledge of a POSITA and Petitioner may rely upon Patent Owner's admission. *Qualcomm Inc.*, 24 F.4th at 1376; EX1002, ¶233. It would be obvious to use what is admitted as "conventional" to supply power to the wall thermostat of *Shamoon*. EX1002, ¶234.

While *Shamoon* teaches a different method of supplying power, it is obvious that the conventional method could be used. *Id.*, ¶234.

If the Board disagrees or determines that an "isolation diode" to protect the backup battery is part of the corresponding structure, then it would be obvious to use a line to connect the thermostat to the power source and protect the backup battery with an isolation diode. *Id.*, ¶106. Again, the '825 Patent teaches that power is "conventionally supplied" using a power line and an isolation diode to protect the battery. EX1001, 5:3-5. Inventor Rosen agrees that the isolation diode to protect the battery is prior art. EX1013, 96:9-97:6. Thus, it is obvious to use this prior art method of supplying power. EX1002, ¶235.

But if the Board disagrees with all of the above, then the power line and a diode to protect the battery (an isolation diode) is obvious to use given the teachings of *Cacciatore*. *Id.*, ¶107. As an initial matter, *Shamoon* and *Cacciatore* are analogous art. *Id.*, ¶236. A POSITA would have been motivated to combine *Cacciatore* with *Shamoon*. *Id*.

Shamoon discloses the use of an X10 interface—a common home automation interface—and therefore accesses home power. EX1008, ¶0071, Figure 6; EX1002, ¶237. For users where home automation is not desired, a POSITA would look to prior art methods that obtain power from the space conditioning equipment. *Cacciatore* is one such reference. EX1002, ¶237. As discussed in Sections

IX.A.1.i and IX.A.2.ii above, *Cacciatore* teaches both connection via a power line (wiring) to space conditioning equipment and protecting a backup battery via an isolation diode.

Based on *Cacciatore's* disclosure that the configuration it describes provides a means for "simply and effectively providing" operating power to a thermostat system, a POSITA would have been motivated to modify *Shamoon* to use the power line and isolation diode taught by *Cacciatore* to supply energizing power to *Shamoon's* wall thermostat system from space conditioning equipment. EX1002, ¶238. Modifying *Shamoon* to incorporate *Cacciatore's* teachings would merely involve the application of a known technique (supplying power to a thermostat system from space conditioning equipment using a power line and protecting a battery with an isolation diode as taught by *Cacciatore*) to a known device (the thermostat system of *Shamoon*) to obtain predictable results (a thermostat system that receives energizing power from space conditioning equipment via a power line and employs an isolation diode to protect a backup battery). *Id.*, ¶238. It is obvious to use this method of supplying power because it is a conventional method and one design choice for doing so. EX1001, 5:3-5; EX1002, ¶238.

A POSITA would have had a reasonable expectation of success in making the combination. EX1002, ¶239. It was conventional to supply power using such structure so a POSITA would just be using prior art structure to supply power.

EX1002, ¶239; EX1004, ¶0020; EX1001, 5:3-5; EX1013, 96:9-97:6.

ii. Rationale and motivation for combining *Shamoon* with *Shigeaki*

Shamoon does not disclose the limitations of Claim 1 concerning the storage of time in a non-volatile memory and putting that stored time into the real time clock after power is restored. *Shigeaki* discloses these limitations and it would be obvious to combine *Shigeaki* with *Shamoon.* EX1002, ¶¶240-45. Specifically, *Shigeaki* discloses the precise method claimed in Claim 1 to reset the real time clock after a power outage. EX1006, ¶0061; EX1002, ¶240.

Shamoon and *Shigeaki* are analogous art. EX1002, ¶241. Both *Shamoon* and *Shigeaki* relate to programmable devices with real-time clocks that store time information. EX1008, Abstract; EX1006, ¶0002.

As discussed in Section IX.A.1.ii above, *Shigeaki* provides two motivations to use its time restoration technique in a thermostat. EX1002, ¶242. Those same two motivations would motivate a POSITA to use *Shigeaki's* technique in *Shamoon* just like in *Rosen* as discussed above. *Supra*, § IX.A.1.ii; EX1002, ¶¶242, 114-126. In addition, a POSITA would be motivated to use known techniques available to restore time as accurately as possible for the same reasons discussed in Section IX.A.1.ii. EX1002, ¶¶242-243. This was just a matter of design choice and the same reasoning as to obviousness in Section IX.A.1.ii is applicable here. *See* EX1002, ¶117.

A POSITA would have had a reasonable expectation of success in making the combination for the same reasons discussed above in Section IX.A.1.ii. *See* EX1002, ¶119. Because the systems of *Shamoon* and *Shigeaki* utilize commercially available, off-the-shelf components, and known techniques it would have been well within the abilities of a POSITA to modify *Shamoon's* thermostat system to include *Shigeaki's* control program functionality (namely, periodically reading the current time and date information into non-volatile memory and reading such data from the non-volatile memory into the real time clock upon restoration of power after failure). *Id*., ¶245; EX1013, 97:21-99:9. This could have been done either using the Flash PROM of *Shamoon* or EEPROM of *Shigeaki* as options for the non-volatile memory. EX1002, ¶245. Either were off-the-shelf options.

2. Claim 1

Each of the eleven elements 1[pre]-1[j] are disclosed by *Shamoon*, as discussed below. However, to the extent Patent Owner disagrees, each of these elements is also common knowledge of a POSITA as admitted by the '825 Patent. *Supra*, § IX.A.2; EX1002, ¶¶127-144. This paragraph provides an alternative basis for obviousness with respect to each of elements 1[pre]-1[j] below.

i. 1[pre]

If the preamble is limiting, *Shamoon* discloses it. EX1002, ¶¶247-249. *Shamoon* discloses an "***an intelligent thermostat which can control***, monitor and communicate to ***a HVAC system*** and a thermostat and remote controller apparatus." EX1008, ¶0025 (emphasis added). It is programmable. *Id.*, ¶¶0040, 0057, 0060, 0065, 0067, 0074.

ii. 1[a]

Shamoon coupled with the general knowledge of a POSITA, or *Shamoon* in combination with *Cacciatore* discloses element 1[a]. EX1002, ¶¶250-251. The disclosure of this claim element is discussed above in Section IX.D.1.i. That discussion is incorporated by reference here.

iii. 1[b]

Shamoon also discloses element 1[b]. EX1002, ¶¶252-255. *Shamoon* discloses its "user interface includes both the hardware and the software via which a user interacts with a control system." EX1008, ¶0012. *Shamoon* further discloses "an interface disposed in said housing; a plurality of icons on the interface, which correspond to a set of controls for items that are controlled by the apparatus." *Id.*, Claim 40. *Shamoon* discloses a "thermostat and remote control apparatus 10 [that] has [a] 'Program\Enter' button 130 that allows a user to enter and activate a setting on the touchpad 330 display such as temperature settings to the thermostat 260." *Id.*, ¶0074; *see also id.*, ¶0019. Figure 2 of *Shamoon* illustrates buttons to

enter various programming information:

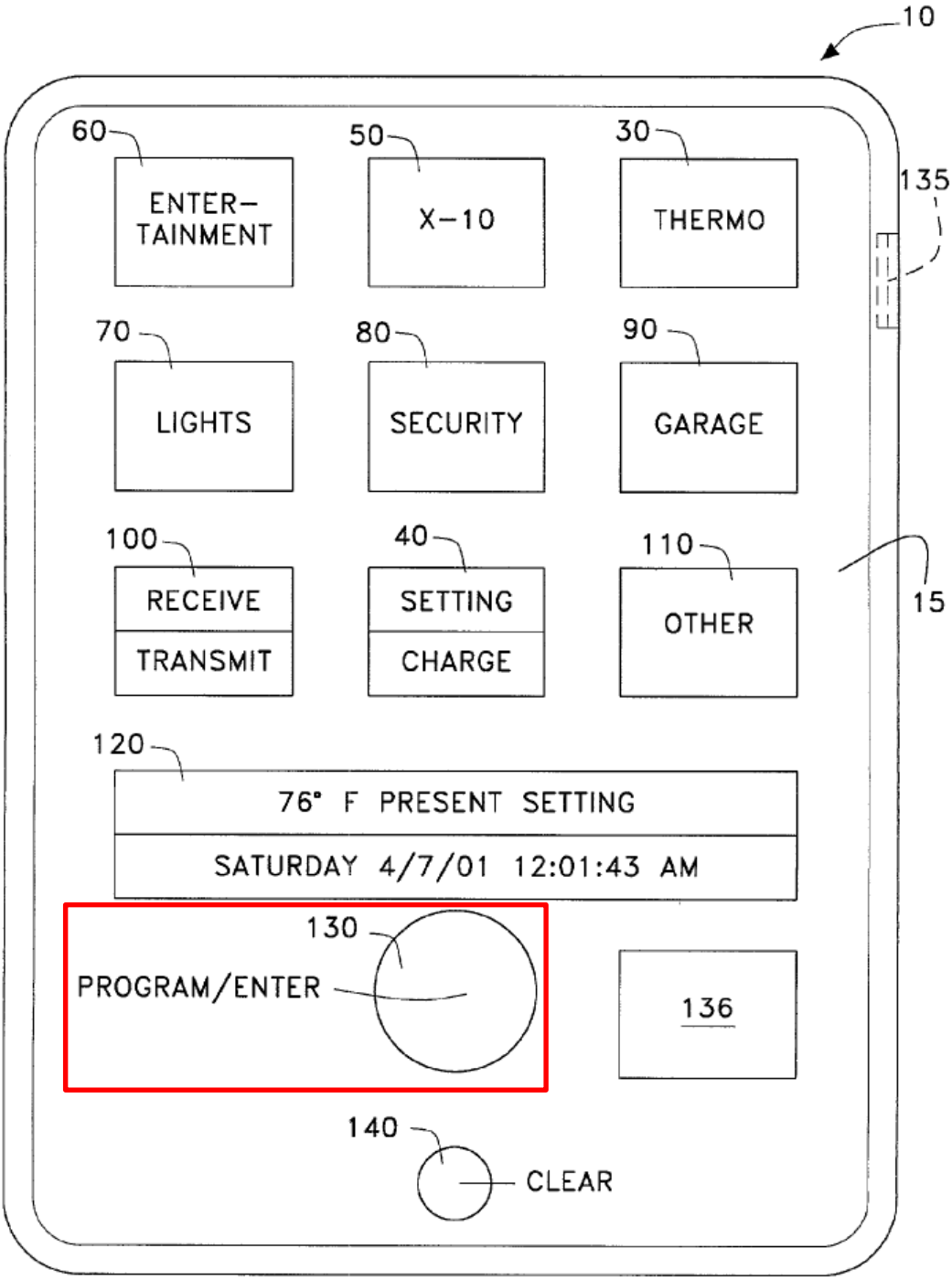

Fig. 2

Id., Figure 2 (annotated), ¶0074; *see also* Figure 6, ¶¶0019, 0070, 0087.

iv. 1[c]

Shamoon or *Shamoon* in combination with the general knowledge of a POSITA discloses element 1[c]. EX1002, ¶¶256-260. *Shamoon's* thermostat system includes a "temperature probe 265" that "sends a signal to an analog to digital temperature converter 370, which sends a signal to the microcontroller 300." EX1008, ¶0071. It is shown in Figure 6:

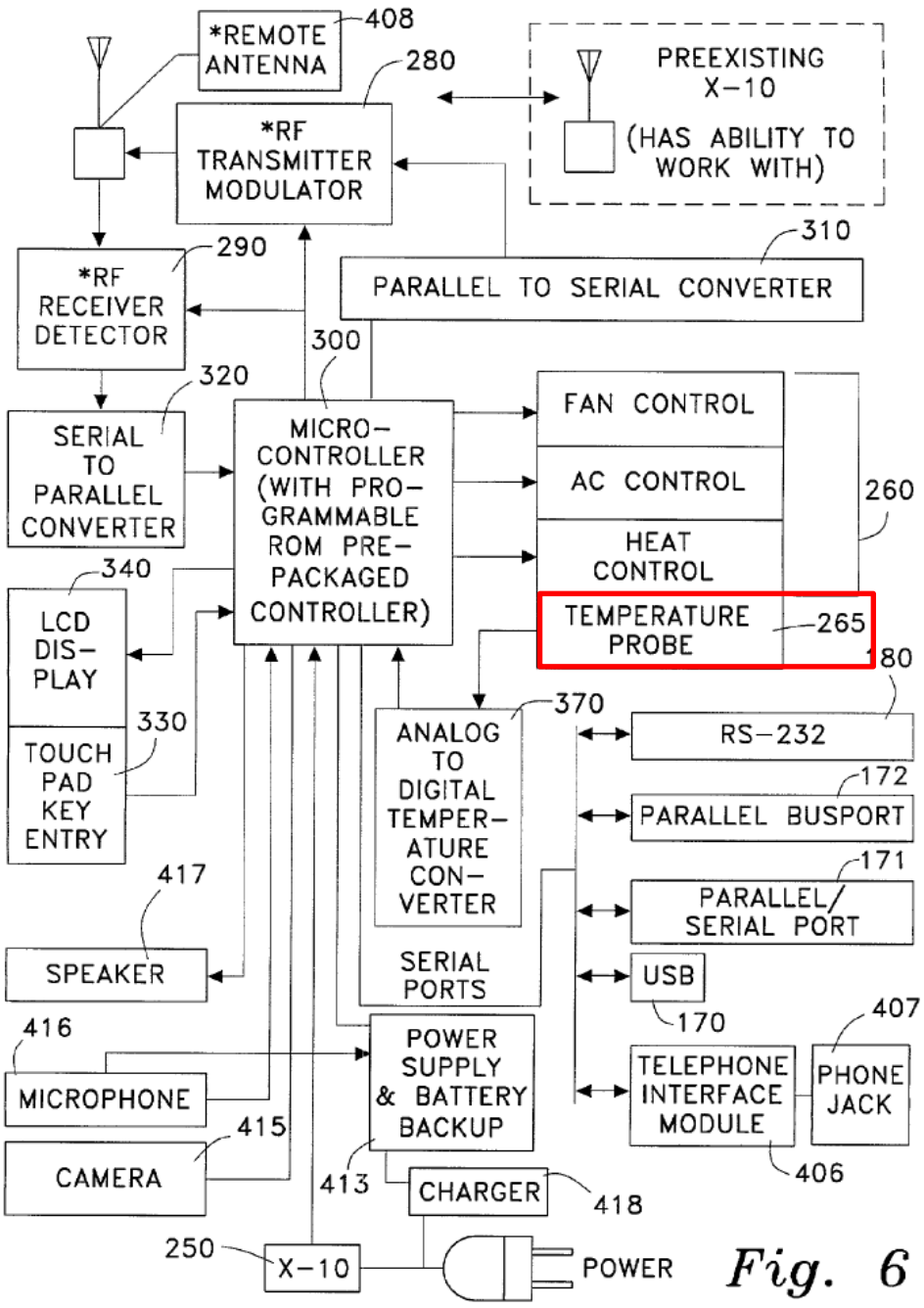

Id., Figure 6 (annotated). This meets the limitations of element 1[c]. EX1002, ¶¶256-260.

v. 1[d]-1[g]

Shamoon or *Shamoon* in combination with the general knowledge of a

POSITA discloses elements 1[d]-1[g]. *Id.*, ¶¶261-268. Annotated Figure 6 of *Shamoon* below shows the processor as microcontroller 300. *Id.*, ¶261.

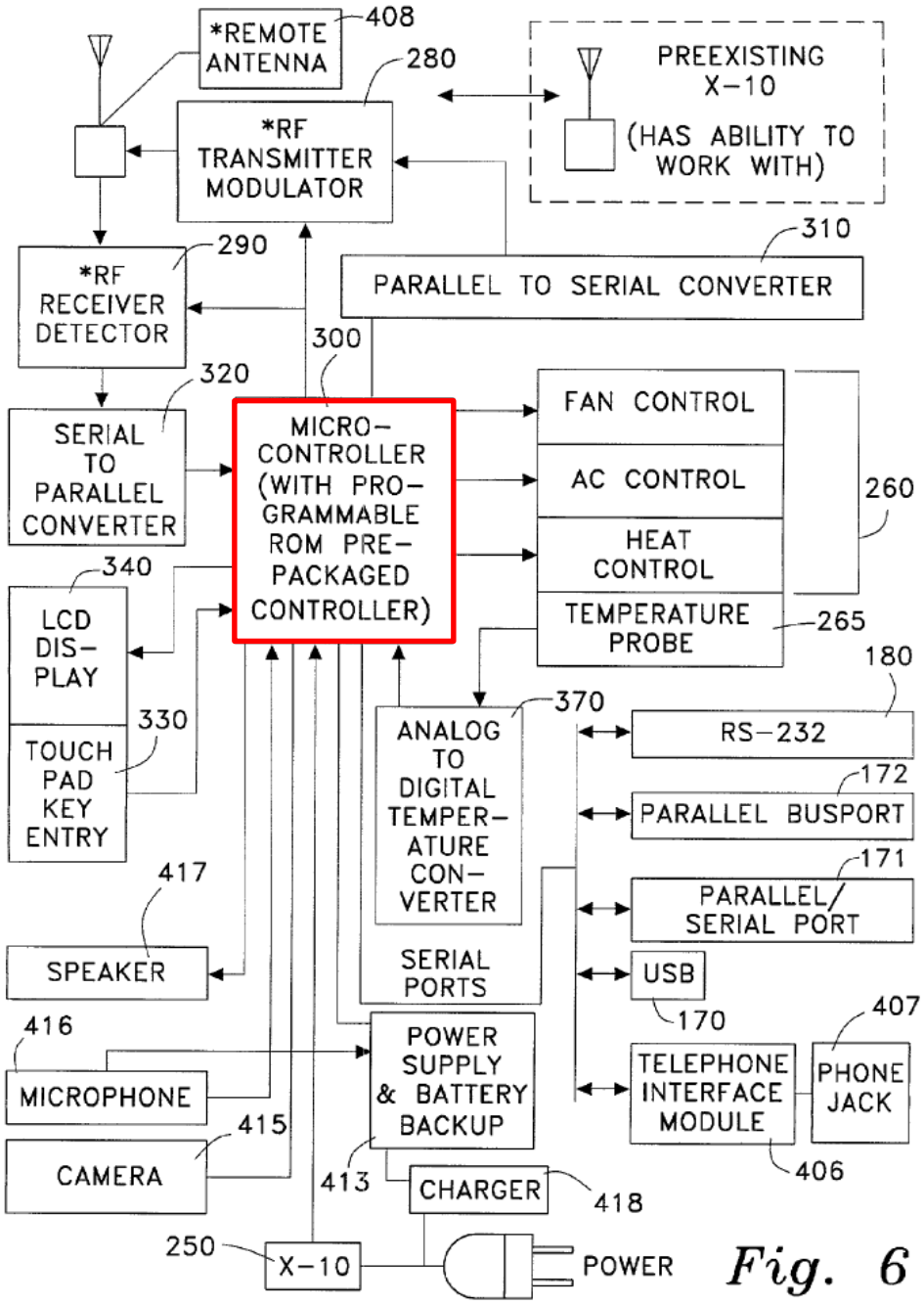

EX1008, Figure 6 (annotated).

A microcontroller is a processor and contains a central processing unit to run

computer programs and perform mathematical operations. EX1002, ¶263; EX1013, 121:14-22. Thus, *Shamoon* discloses elements 1[d] and 1[e]. EX1002, ¶263. Further, *Shamoon* discloses memory that is part of the microcontroller that runs programs to control the thermostat. EX1002, ¶264; EX1008, ¶0060. A POSITA would understand that the memory stores data because *Shamoon* indicates that the microcontroller processes data. EX1002, ¶264; EX1008, Abstract, ¶0019. Inventor Rosen agrees that a prior art microcontroller could include the CPU, memory, and communications interface. EX1013, 101:6-20, 121:14-22.

Shamoon further discloses an input/output unit. EX1008, ¶0066. The microcontroller receives electrical signals from a temperature sensor 265 through analog to digital converter 370. EX1008, ¶0071; EX1002, ¶266. The circuitry within the microcontroller that receives the signal and/or that circuitry in combination with converter 370 are a sensor input that forms part of the input/output unit. EX1002, ¶266. The microcontroller outputs electrical signals to control space conditioning equipment. EX1008, ¶0071; EX1002, ¶266. Thus, the microcontroller contains an input/output unit with a sensor input and control output. EX1002, ¶266.

vi. 1[h]-1[j]

Shamoon or *Shamoon* in combination with the general knowledge of a POSITA discloses elements 1[h]-1[j]. EX1002, ¶¶269-275. As discussed above

for element 1[g], *Shamoon* discloses the claimed input/output unit. *Supra*, §IX.D.2.v; EX1008, ¶¶0066, 0071; EX1002, ¶¶270, 266. *Shamoon's* input/output unit includes the features recited in elements 1[h]-1[i].

As discussed above with respect to element 1[c], *Shamoon's* temperature probe 265 is a temperature sensor. *Supra*, § IX.D.2.iv. The temperature sensor connects to an analog to digital converter where the temperature sensor analog signal is converted to a digital signal. EX1002, ¶272; EX1008, ¶0071, Figure 6. The circuitry within the microcontroller that receives the digital signal and/or that circuitry in combination with converter 370 constitutes a sensor input that forms part of the input/output unit. EX1002, ¶272. That circuitry is coupled to the temperature sensor as shown in Figure 6 and receives an electrical signal therefrom as required by element 1[i]. EX1002, ¶272; EX1008, Figure 6, ¶0071.

Shamoon also has a control output coupled to the space conditioning equipment for issuing control signals. The fan, air conditioning and heater are examples of space conditioning equipment. EX1013, 96:5-8. *Shamoon's* "microcontroller 300 [] sends a signal to the fan control, air conditioning control and heat control of the thermostat 260," and thus, the circuitry that does so within the microcontroller is a control output for issuing control signals to the space conditioning equipment of *Shamoon*. EX1008, ¶0071. A POSITA would understand that circuitry within the microcontroller that generates these signals for

control qualifies as the claimed control output. EX1002, ¶273.

Shamoon also discloses element 1[j]. *Id.*, ¶¶274-275. *Shamoon* discloses a "built-in clock on the thermostat and remote control apparatus 10 that is synchronized to the thermostat 260." EX1008, ¶0074; *see also id.*, Claim 18, Figure 2.

vii. 1[k]

Shamoon or *Shamoon* in combination with *Shigeaki* discloses element 1[k]. EX1002, ¶¶276-282. *Shamoon's* "microcontroller 300 is also provided with programmable memory (such as RAM, PROM and flash PROM)." EX1008, ¶0060. Flash PROM is a non-volatile random access memory, satisfying element 1[k]. EX1002, ¶277; EX1019, 7:29-32.

Even if *Shamoon* did not disclose a non-volatile memory, *Shigeaki* discloses element 1[k]. Non-volatile memory was well known in the prior art. EX1002, ¶278; EX1013, 103:4-14. A known purpose of a non-volatile memory is to retain the contents of the memory even when no power is supplied to the memory. EX1002, ¶278; EX1013, 104:14-25.

For the same reasons disclosed in Section IX.A.2.vii with respect to Ground 1, *Shigeaki* discloses this element. EX1002, ¶¶163-166, 278-280. When *Shigeaki's* teachings are applied to *Shamoon*, in the combined system a non-volatile memory as taught by *Shigeaki* is used to store the clock information and retain it

during a power outage. *Id*., ¶¶276-282. As described above in Section IX.D.1.ii, it would have been obvious to a POSITA to combine *Shigeaki's* teachings of using non-volatile memory and its method of handling time during a power outage with *Shamoon's* programmable thermostat system to arrive at the claimed invention. *Id*., ¶¶240-245, 280.

viii. 1[l]-1[n]

Shamoon in combination with *Shigeaki* discloses elements 1[l]-1[n]. *Id*., ¶¶283-288. *Shamoon* discloses a control program—"prepackaged software [] that runs the hardware and other components of the thermostat and remote control apparatus 10." EX1008, ¶0060. *Shigeaki* discloses a control program 1[l] with the capabilities of elements 1[m]-1[n].

As discussed above for element 1[j], the thermostat system of *Shamoon* includes a real time clock. *See supra*, § IX.D.2.vi. As discussed above for element 1[k], both *Shamoon* and *Shigeaki* disclose a non-volatile memory. *Supra*, § IX.D.2.vii.

The non-volatile memory of *Shigeaki* "stores the current time… in the semiconductor non-volatile memory…" EX1006, ¶13, Claims 1-2, ¶¶0007-0008, 0039. A POSITA would understand that these steps occur due to action by a control program (or that is at least obvious) because a microprocessor running a control program typically causes data to be stored into memory and read from

memory. EX1002, ¶285.

Shigeaki further discloses that when "a power outage of the commercial power supply is restored, … the data reading means reads <u>time data</u>… from the semiconductor non-volatile memory." EX1006, ¶0014. When the system disclosed in *Shigeaki* detects that power has been restored, it reads the time data from the non-volatile memory to set the time of the clock. *Id*., ¶¶0014-0015, 0040.

The summary of what the control program of *Shigeaki* does is synonymous with elements 1[m]-1[n]. "When a power outage occurs, the time data pertaining to the current time is stored in E^2PROM 2, and when power is restored, the time data is read from E^2PROM 2, and the time is resumed from the current time corresponding to the retrieved time data." EX1006, ¶0061. A POSITA would understand that it is a control program storing the time/date data in non-volatile memory and reading that data from the memory after a power outage and then resetting the clock using the stored data. EX1002, ¶285.

As described above in Section IX.D.1.ii, it would have been obvious to a POSITA to combine *Shigeaki's* teachings of periodically storing time data into non-volatile memory and restoring the clock to that time after a power outage with *Shamoon's* programmable thermostat system. EX1002, ¶¶288, 240-245.

Accordingly, the combination of *Shigeaki* and *Shamoon* discloses and suggests to a POSITA elements 1[l]-1[n]. EX1002, ¶¶283-288.

E. Ground 5: Claim 4 is obvious over *Shamoon* in view of *Cacciatore*, *Shigeaki* and *Toth*

1. Motivation to Combine

i. Rationale and motivation for combining *Shamoon* and *Toth*

Toth is provided in grounds involving *Shamoon* in an abundance of caution. Its inclusion concerns the "vacation" elements of Claims 4, 13, 15 and 16 though this element would be obvious in light of admissions in the specification of the '825 Patent. EX1002, ¶¶289-294.

"Typically, a programmable thermostat … may include both normal and vacation modes." EX1001, 1:44-50. Given these admissions, this element is within the general knowledge of a POSITA and Petitioner may rely upon Patent Owner's admission. EX1002, ¶289. Thus, it would be obvious to include a vacation mode of operation that is admitted as "typical[]" in the system of *Shamoon*.

A vacation mode of operation is also obvious to use given the teachings of *Toth*. *Id*., ¶291. Modifying *Shamoon* to incorporate *Toth's* teachings would merely involve the application of a known technique (a vacation mode of operation as taught by *Toth*) to a known device (the thermostat system of *Shamoon*) to obtain predictable results (a thermostat system that includes a vacation mode of operation). *Id*., ¶293. A POSITA would understand that a vacation mode is desirable to allow

the user of a thermostat to save energy while on vacation and maintain control over the schedule of heating/cooling during the vacation. *Id*.

A POSITA would have had a reasonable expectation of success in making the combination. *Id*., ¶294. It was conventional to include a vacation mode of operation in a thermostat system so a POSITA would just be using prior art structure/software to implement a known function. EX1001, 2:10-16; EX1013, 71:9-24; EX1002, ¶294.

2. Claim 4

The *Shamoon-Cacciatore-Shigeaki-Toth* combined system discloses all elements in Claim 1 for the reasons discussed above for Claim 1. *Supra*, § IX.D.2; EX1002, ¶¶295-296. *Toth* discloses the new elements of Claim 4 as does the common knowledge of a POSITA. EX1002, ¶295. It was well known in the art that thermostat systems include vacation modes of operation, as acknowledged by the ’825 Patent. EX1001, 1:60-61; EX1002, ¶295.

Indeed, *Toth* discloses a “vacation mode of operation.” EX1012, 4:55-56. In the annotated figure below *Toth* illustrates how users can start, stop, or adjust vacation mode:

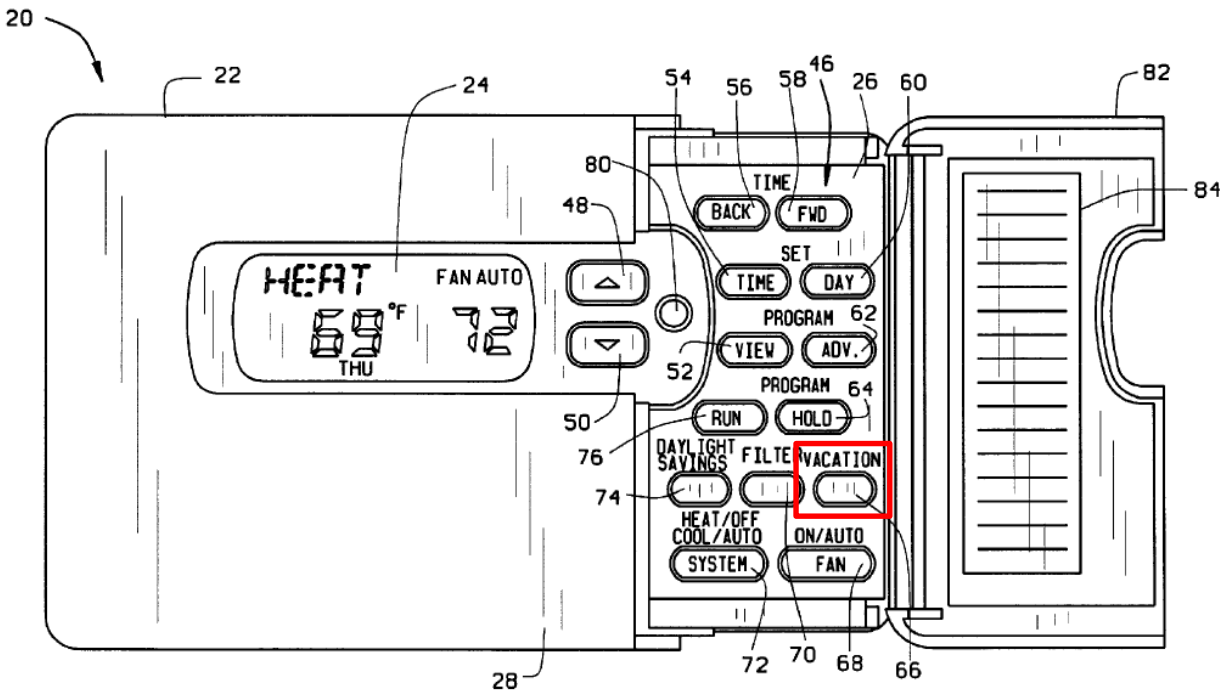

FIG. 1

EX1012, Figure 1 (annotated); *see also id.*, 4:1-7, 4:28-36, 4:51-58. *Toth* thus discloses each additional limitation of Claim 4. EX1002, ¶296. The motivation to combine *Toth* and *Shamoon* is discussed above, and that discussion is incorporated by reference here. *Supra*, § IX.E.1.i; EX1002, ¶¶289-294.

F. Ground 6: Claims 11 and 12 are obvious over *Shamoon* in view of *Cacciatore*, and *Carey*

1. Claim 11

i. 11[pre]-11[j]

Elements 11[pre]-11[j] are identical to elements 1[pre]-1[j] and are thus disclosed in the same manner as described in Sections IX.D.2.i-vi for elements 1[pre]-1[j]. EX1002, ¶298. For clarity, each of these elements is also common

knowledge of a POSITA as admitted in the ’825 Patent as explained in the introduction to Claim 1 above. *Supra*, § IX.A.2; EX1002, ¶¶127-134, 181. Also, the analysis above as to the combining of *Shamoon* with *Cacciatore* applies to element 11[a] as well. *Supra*, § IX.D.1.i.

ii. 11[k]

Shamoon in combination with *Carey* together disclose element 11[k]. EX1002, ¶¶299-301. Claim 11 is directed to a thermostat with a second method to try to maintain the time as accurately as possible in the event of a power outage—a method disclosed by *Carey*. The ’825 Patent acknowledges that the use of receivers adapted to receive time and date information from an external source and the use of such information to update the real time clock was “well known in the art.” EX1001, 6:13-24; EX1002, ¶299.

As discussed above with respect to element 1[j], *Shamoon* discloses a real time clock. EX1008, ¶0074; *supra*, § IX.D.2.vi; *see also* EX1008, ¶0059, Figure 2; EX1002, ¶300.

Carey discloses element 11[k] for the same reasons discussed above with respect to Ground 2. *Supra*, § IX.B.1.ii. Accordingly, the combination of *Carey* and *Shamoon* discloses element 11[k]. EX1002, ¶¶299-301.

(a) Rationale and motivation for combining *Shamoon* and *Carey*

It would have been obvious to a POSITA to combine *Carey’s* receiver with

Shamoon's thermostat. *Id.*, ¶¶302-310. Indeed, modifying *Shamoon* to incorporate the receiver of *Carey* would merely involve the simple addition of a known element (the receiver integrated circuit of *Carey*) for a disclosed and generally known function (synchronizing time information) to obtain predictable results (a thermostat system with a receiver adapted to receive current time and date information from an external source to update the time and date of the thermostat system). *Id.*, ¶302.

Shamoon and *Carey* are analogous art. *Id.*, ¶303. Both *Shamoon* and *Carey* relate to thermostats with real-time clocks. EX1008, ¶0074; EX1007, Abstract. The reasoning discussed in Ground 2 for using *Carey* to keep the clock as accurate as possible, especially due to the stated advantages, applies equally to the combination with *Shamoon.* *Supra*, § IX.B.1.ii.a.

Given that *Carey* provides a method to keep time as accurate as possible after a power outage with identified advantages, it would be obvious to use the method of *Carey* in the thermostat of *Shamoon*. EX1002, ¶304. A POSITA would further understand from *Carey* that if the WWVB receiver was used, the receiver could be used to automatically reset the time after a power failure. *Id.*, ¶304.

A POSITA would have been motivated to incorporate *Carey's* known updating time and date from an external source technique in order to improve upon the *Shamoon* thermostat by making it easier to set the time. EX1002, ¶305.

Incorporating the aforementioned technique of *Carey's* thermostat system would provide a better experience to the users of *Shamoon's* thermostat system because they would not have to engage in the multi-step process *Carey* improves upon. EX1007, ¶0001; EX1002, ¶306. This streamlines the programming of the *Shamoon* thermostat and would "allow a user to easily initiate a single set back program without having to set the current time and date." EX1007, ¶0004.

A POSITA would have had a reasonable expectation of success in making the combination. EX1002, ¶307. Using *Carey's* clock reset technique would only require the modification of conventional, well-known components, e.g., antenna and receiver, already present in the *Shamoon* system and the use of a WWVB receiver, which the '825 Patent concedes can be readily incorporated into a thermostat. *Compare* EX1007, Figure 1 *and* EX1008, Figure 6; *see also* EX1001, 6:12-17; EX1002, ¶307. A POSITA would understand that antennas and receivers were commonly known in the art, and particularly, were included in thermostat systems. EX1002, ¶307; *see also* EX1007, ¶0009. Using such well-known hardware to receive WWVB signals and update time and date information is a conventional technique that was commonly known to a POSITA and known to be used in thermostat systems. EX1002, ¶307.

Given the similarities of the systems, a POSITA would have understood that *Carey's* techniques were suitable for application with *Shamoon's* thermostat system.

Id., ¶308; EX1008, ¶0073; EX1007, Abstract. It would have been well within the abilities of a POSITA to include the antenna and receiver in *Shamoon's* thermostat to receive time code signal broadcasts from station WWVB as taught by *Carey*. EX1002, ¶308.

It was well known to use receivers to receive time and date information from an external source and use such information to update the real time clock in a thermostat, as admitted by the '825 Patent. EX1001, 6:13-24; EX1002, ¶309. Additionally, *Carey* also uses parts off the shelf. EX1007, ¶0008.

Because the *Carey* system utilizes commercially available, off-the-shelf components, and known techniques, a reasonable expectation of success is evident. EX1002, ¶310.

2. Claim 12

The *Shamoon-Cacciatore-Carey* combined system discloses Claim 11 for the reasons discussed in Section IX.F.1 for Claim 11. The system disclosed in *Carey* discloses this element for the same reasons discussed above for Ground 2. *Supra*, § IX.B.2; EX1002, ¶¶311-312.

G. Ground 7: Claims 13 and 16 are obvious over *Shamoon* in view of *Cacciatore*, *Carey*, and *Toth*

1. Claim 13

The *Shamoon-Cacciatore-Carey-Toth* combined system discloses all elements in Claim 12 for the reasons discussed above for Claim 12 and because *Toth*

discloses the new elements of Claim 13 as discussed above in Section IX.E.2. EX1002, ¶¶313-314. As discussed in Section IX.E.1.i., a POSITA would have been motivated to incorporate *Toth's* vacation mode of operation in order to improve upon the *Shamoon* thermostat, that discussion is incorporated by reference here. EX1002, ¶¶289-294.

2. Claim 16

Claim 11 is disclosed for the reasons described above in Section IX.F.1. The new limitations of Claim 16 are disclosed by *Toth* and Claim 16 is obvious for the same reasons as described in Section IX.G.1 for Claim 13. EX1002, ¶315.

H. Ground 8: Claims 11 and 14 are obvious over *Shamoon* in view of *Cacciatore*, and *Williamson*

1. Claim 11

i. 11[pre]-11[j]:

The analysis for elements 11[pre]-11[j] is identical to the analysis for Ground 6 as set forth in Section IX.F.1.i above. EX1002, ¶317.

ii. 11[k]

Shamoon in combination with *Cacciatore* and *Williamson* discloses element 11[k]. EX1002, ¶¶318-319. As discussed above with respect to element 1[j], *Shamoon* discloses a real time clock. *Supra*, § IX.D.2.vi; *see also* EX1008, ¶0074; EX1002, ¶319. For the reasons discussed above in Section IX.C.1.ii in connection with Ground 3, *Williamson* discloses element 11[k]. Accordingly, the combination

of *Williamson* and *Shamoon* together disclose element 11[k]. EX1002, ¶319.

(a) Rationale and motivation for combining *Shamoon* and *Williamson*

It would have been obvious to a POSITA to combine *Shamoon's* programmable thermostat system with the connections of *Williamson's* intelligent controller to an Internet service provider as suggested by the prior art. *Id*., ¶¶320-324; EX1020, 9 n.10.

Modifying *Shamoon* to incorporate the Internet connectivity of *Williamson* would merely involve the simple addition of a known element (the Internet service provider connection, e.g., the cable modem or DSL router of *Williamson*) for a generally known function (receiving time information) to obtain predictable results (a thermostat system updating time using an Internet reference). EX1002, ¶320. Moreover, *Shamoon* contemplates a "web-based thermostat." EX1008, ¶0083.

Shamoon and *Williamson* are analogous art. EX1002, ¶321. Both *Shamoon* and *Williamson* relate to programmable home appliances that contain real-time clocks. EX1004, ¶0001; EX1007, ¶0001. A POSITA would have been motivated to modify *Shamoon* to incorporate the receiver of *Williamson* to improve upon *Shamoon's* thermostat system. EX1002, ¶321.

Incorporating the aforementioned technique of *Williamson's* thermostat system would improve *Shamoon's* thermostat system by (a) automatically setting the clock for the user, thus saving the user time, and (b) automatically resetting the

clock after a power outage thus maintaining the correct time shortly after time was restored. *Id*., ¶¶322-323. Use of *Williamson's* technique would "assure[that] all clocks report the correct time." EX1010, 2:13.

A POSITA would have had a reasonable expectation of success in making the combination of *Shamoon's* thermostat system with *Williamson's* receiver. EX1002, ¶324. As an initial matter, a POSITA would have recognized that the systems described in *Shamoon* and *Williamson* have remarkably similar functionalities. *Id*. Thus, a POSITA would have understood that the receiver of *Williamson* could be readily incorporated into the thermostat system of *Shamoon*. *Id*. In addition, *Williamson* teaches standard methods of connecting to the Internet. EX1010, 4:36-44; EX1002, ¶324. It would have been well within the abilities of a POSITA to modify *Shamoon's* thermostat system to include any of the standard hardware needed for these methods of connection to receive the time over the Internet. EX1002, ¶324.

2. Claim 14

Shamoon in combination with *Cacciatore* and *Williamson* discloses the added elements of Claim 14. EX1002, ¶¶325-326. This combination discloses the elements of Claim 11 as set forth above in Section IX.H.1. As discussed above with regards to element 11[k], *Shamoon* modified by *Williamson* discloses a thermostat system that synchronizes and updates the real-time clock based on current

time and date information received from an external source over the Internet.

The system disclosed in *Williamson* includes a receiver that "connect[s] with the Internet" and maintains the correct time. EX1010, 4:36-40, 5:34-36, 7:38-42. Thus, the receiver in *Williamson* receives signals via the Internet from an external source, thereby disclosing the new limitation of Claim 14. EX1002, ¶326.

I. Ground 9: Claims 15 and 16 are obvious over *Shamoon* in view of *Cacciatore*, *Williamson*, and *Toth*

1. Claim 15

The *Shamoon-Cacciatore-Williamson* combined system discloses all elements in Claim 15 for the reasons discussed above in Section IX.H.2 for Claim 14 and because *Toth* discloses the new elements of Claim 15 as discussed above in Section IX.E.2. *Id*., ¶¶327-329. The motivation to combine *Toth* and *Shamoon* is discussed above, and that discussion is incorporated by reference here. *Supra*, § IX.E.1.i. *Id*., ¶¶289-294.

2. Claim 16

Claim 11 is disclosed for the reasons described above in Section IX.F.1. The new limitations of Claim 16 are disclosed by *Toth* and Claim 16 is obvious for the same reasons as described in Section IX.G.1 for Claim 13. *Id*., ¶330.

X. SECONDARY CONSIDERATIONS

Petitioner is aware of no evidence of secondary considerations that would meaningfully rebut a finding of obviousness. *Id*., ¶¶331-332.

XI. INSTITUTION SHOULD BE GRANTED

A. Discretion Under 35 U.S.C. § 314(a)

The Board should not exercise its discretion under §314(a) to deny this Petition. First, no other petitions have been filed against the '825 Patent. *See Gen. Plastic Indus. Co. v. Canon Kabushiki Kaisha*, IPR2016-01357, Paper 19 at 15-16 (P.T.A.B. Sept. 6, 2017) (precedential).

Second, if the Board applies the analysis in *NHK Spring Co., Ltd. v. Intri-Plex Techs., Inc.*, IPR2018-00752, Paper 8 at 19-20 (P.T.A.B. Sept. 12, 2018) (precedential)[4] or *Apple Inc. v. Fintiv, Inc.*, IPR2020-00019, Paper 11 at 5-6 (P.T.A.B. Mar. 20, 2020) (precedential), those factors taken together support institution.

Factor 1: Potential Stay

While Petitioner intends to move for a stay, the Board should "not attempt to predict how the district court in the related district court litigation will proceed[.]" *Sand Revolution II, LLC v. Cont'l Intermodal Grp.-Trucking LLC*, IPR2019-01393, Paper 24 at 7 (P.T.A.B. Jun. 16, 2020) (informative).

---

[4] Petitioner recognizes the Board must apply its precedential caselaw, but specifically reserves its objection to the Board's application of the *NHK-Fintiv* caselaw as non-justiciable under the APA.

Factor 2: Trial Date

The related litigation is set for jury trial beginning June 3, 2024. EX1016, 2. That is approximately three months before the projected September 2024 statutory deadline for the Board to enter a final written decision in this proceeding (if instituted). "[T]he decision whether to institute will likely implicate other factors . . . such as the resources that have been invested in the parallel proceeding." *Fintiv*, IPR2020-00019, Paper 11 at 9. As discussed below, the litigation is in its early stages.

Also, trial dates are uncertain. *See Halliburton Energy Servs., Inc. v. U.S. Well Servs., LLC*, IPR2021-01037, Paper 12 (P.T.A.B. Jan. 19, 2022); EX1028 at 2 (finding the PTAB had accurately "evaluat[ed] future trial dates" only six percent of the time); EX1029 (similar). Even if the trial is scheduled several months before the Board's final written decision, this factor would be "at most, neutral." *Micron Tech., Inc. v. Godo Kaisha IP Bridge 1*, IPR2020-01008, Paper 10 at 14 (P.T.A.B. Dec. 7, 2020); *Google LLC v. Parus Holdings, Inc.*, IPR2020-00846, Paper 9 at 12-14 (P.T.A.B. Oct. 21, 2020).

If trial were to proceed as scheduled, this factor at most "only slightly favors" denying institution. *See Micron Tech., Inc. v. Vervain, LLC*, IPR2021-01550, Paper 11 at 10 (P.T.A.B. Apr. 11, 2022). In that case, however, it is outweighed by other factors here, including the relatively early stage of the case as discussed below. *See*,

e.g., *Microsoft Corp. v. WSOU Invs., LLC*, IPR2021-00930, Paper 8 at 6-13 (P.T.A.B. Dec. 2, 2021); *Facebook, Inc. v. USC IP P'ship, L.P.*, IPR2021-00033, Paper 13 at (P.T.A.B. Apr. 30, 2021).

Factor 3: Investment in the parallel proceeding

Neither the parties nor the court have expended substantial effort in the parallel proceeding. Petitioner filed a motion to dismiss the complaint as to the '825 Patent under 35 U.S.C. § 101 on June 21, 2022. The motion was granted in part and denied in part on January 4, 2023. Patent Owner served its preliminary infringement contentions on October 20, 2022 and its amended infringement contentions on November 21, 2022. Petitioner served its invalidity contentions on December 15, 2022. The claim construction process has only just begun. Claim construction briefing will be completed by May 11, 2023 followed by a potential hearing. EX1022; EX1016, 5. The effort and resources expended to date are "typical of the early stages of litigation" and thus this factor "does not favor exercising discretion to deny institution." *Apple Inc. v. Smart Mobile Techs. LLC*, IPR2022-00808, Paper 24 at 52 (P.T.A.B. Sept. 29, 2022).

Petitioner worked diligently to file this Petition. As noted above, Petitioner moved to dismiss on June 21, 2022. That motion was potentially case dispositive as to the '825 Patent. To conserve resources of the Board and the parties, it would have made no sense to file petitions for IPR prior to resolution of the motion to

dismiss. This Petition, and four other petitions challenging different patents also asserted in the litigation, were filed just over two months after the district court denied the motion. Additionally, the Petition was filed within five months of receiving Patent Owner's original infringement contentions and less than two months after receiving Patent Owner's proposed claim constructions.

It would be premature to speculate as to "the amount and type of work" that will have been completed when the institution decision is made. *Google LLC*, IPR2020-00846, Paper 9 at 17-18. For example, the deadline to complete all discovery is November 20, 2023. EX1016, 6. Summary judgment motions are due on December 21, 2023. *Id.*, 2. Thus, there will certainly be "much work remain[ing] in the district court case as it relates to invalidity" when this proceeding is ready for institution. *Sand Revolution II*, IPR2019-01393, Paper 24 at 11. Coupled with Petitioner's diligence in filing this Petition, this factor weighs against discretionary denial. *Cf. id.* at 10-11; *Google*, IPR2020-00846, Paper 9 at 18.

Factor 4: Issue Overlap

This Petition challenges each district court asserted claim. EX1030. The Petition challenges additional claims not asserted in the district court litigation (Claims 11-16). Petitioners served invalidity contentions in the parallel proceeding. Any overlap at this point would be speculative.

Factor 5: Party Overlap

Petitioner and Patent Owner are parties in the related district court litigation.

Factor 6: Other Circumstances Favoring Institution

Additional circumstances favor institution. First, Petitioner acted with diligence. Petitioner has gained no advantage from the parallel litigation, which favors institution. *See Oticon Med. AB v. Cochlear Ltd.*, IPR2019-00975, Paper 15 at 22-23 (P.T.A.B. Oct. 16, 2019) (precedential). The motion to dismiss had the potential to dispose of the case for the ’825 Patent. It was entirely reasonable for Petitioner to wait until the motion had been decided before undertaking the effort and expense of preparing the instant Petition.

Moreover, the merits favor institution as the strong grounds in this Petition demonstrate. “In such cases, the institution of a trial may serve the interest of overall system efficiency and integrity because it allows the proceeding to continue in the event that the parallel proceeding settles or fails to resolve the patentability question presented in the PTAB proceeding.” *Google*, IPR2020-00846, Paper 9 at 21 (quoting *Fintiv*, IPR2020-00019, Paper 11 at 14-15). The Petition’s Grounds 1-9 render obvious every challenged claim. One of the references (*Rosen*) discloses nearly every element of the challenged claims verbatim, and other prior art discloses each of the three claimed methods of addressing a power outage in the exact way claimed. The same is true for the *Shamoon* grounds. Because the merits of

Petitioner's patentability challenge are compelling, this factor weighs against denying institution. *Fintiv*, IPR2020-00019, Paper 11 at 14-15; EX1031, 4.

"Considering the *Fintiv* factors as part of a holistic analysis," it would undermine "the interests of the efficiency and integrity of the system" if the Board were "to deny institution of a potentially meritorious Petition." *Sand Revolution*, IPR2019-01393, Paper 24 at 14. Accordingly, the Board should institute this proceeding.

B. Discretion Under 35 U.S.C. §325(d)

The Board should not exercise its discretion under 35 U.S.C. §325(d). Only *Carey* was cited during prosecution and not used in a claim rejection. Thus, the grounds based on *Rosen* (Grounds 1-3) and *Shamoon* (Grounds 4-9) were not considered by the Examiner. Although *Carey* was cited, along with 22 other references, the Examiner could not have considered it in conjunction with the primary references above. The Board should decline to exercise its discretion under 35 U.S.C. §325(d).

XII. CONCLUSION

Petitioner respectfully requests institution of IPR and that the Challenged Claims be cancelled as unpatentable pursuant to 35 U.S.C. § 318(b).

Respectfully Submitted,

March 29, 2023

/David G. Wille/
David G. Wille (Reg. No. 38,363)
BAKER BOTTS L.L.P.
2001 Ross Avenue, Suite 900
Dallas, TX 75201-2980
Tel: 214-953-6595
david.wille@bakerbotts.com

Attorneys for Petitioner, Lennox Industries Inc.

CERTIFICATE OF SERVICE

In accordance with 37 C.F.R. §§ 42.6(e) and 42.105, the undersigned certifies that on March 29, 2023, a complete and entire copy of the **PETITION FOR *INTER PARTES* REVIEW OF CLAIMS 1, 4 and 11-16 OF U.S. PATENT NO. 7,185,825** including exhibits and testimony relied upon and a power of attorney were served on Patent Owner via FedEx overnight at the correspondence address of record for the subject patent and counsel for Patent Owner in the NDTX Litigation, as included below:

Marc Hankin
Hankin Patent Law, APC
12400 Wilshire Boulevard, Suite 1265
Los Angeles, CA 90025

Hao Ni
NI, WANG & MASSAND, PLLC
8140 Walnut Hill Ln., Ste. 500
Dallas, TX 75231

Date: March 29, 2023

/David G. Wille/
David G. Wille (Reg. No. 38,363)
BAKER BOTTS L.L.P.
2001 Ross Avenue, Suite 900
Dallas, TX 75201-2980
Tel: 214-953-6595
david.wille@bakerbotts.com

Attorneys for Petitioner, Lennox Industries Inc.

CERTIFICATION UNDER 37 C.F.R. § 42.24(d)

Pursuant to 37 C.F.R. § 42.24(d), the undersigned hereby certifies that the word count under § 42.24(a)(1) for the foregoing Petition for *Inter Partes* Review totals 13,696 words, within the 14,000 word limit allowed under § 42.24(a)(1)(i).

Date: March 29, 2023

/David G. Wille/
David G. Wille (Reg. No. 38,363)
BAKER BOTTS L.L.P.
2001 Ross Avenue, Suite 900
Dallas, TX 75201-2980
Tel: 214-953-6595
david.wille@bakerbotts.com

Attorneys for Petitioner, Lennox Industries Inc.