UNITED STATES PATENT AND TRADEMARK OFFICE

BEFORE THE PATENT TRIAL AND APPEAL BOARD

LENNOX INDUSTRIES INC.,

Petitioner,

v.

ROSEN TECHNOLOGIES LLC,

Patent Owner.

IPR2023-00719
Attorney Docket No.: 018635.0919

PETITION FOR *INTER PARTES* REVIEW OF CLAIMS 1-4 AND 11-15 OF U.S. PATENT NO. 7,232,075

Mail Stop PATENT BOARD
Patent Trial and Appeal Board
United States Patent and Trademark Office
PO Box 1450
Alexandria, Virginia 22313-1450

TABLE OF CONTENTS

Page

TABLE OF AUTHORITIES V

PETITIONER'S EXHIBIT LIST VIII

I. INTRODUCTION 1

II. MANDATORY NOTICES UNDER 37 C.F.R. 42.8(A)(1) 1

A. Real Party-in-Interest under 37 C.F.R. 42.8(b)(1) 1

B. Related Matters under 37 C.F.R. 42.8(b)(2) 1

C. Lead and Back-Up Counsel under 37 C.F.R. 42.8(b)(3) 2

D. Service Information under 37 C.F.R. 42.8(b)(4) 3

III. CLAIM LISTING 3

A. Claim 1 3

B. Claim 2 5

C. Claim 3 5

D. Claim 4 5

E. Claim 11 5

F. Claim 12 6

G. Claim 13 6

H. Claim 14 6

I. Claim 15 6

IV. REQUIREMENTS UNDER 37 C.F.R. 42.104 6

A. Grounds for Standing 6

B. Identification of Challenge and Statement of Precise Relief Requested 7

V. THE '075 PATENT 7

A. Subject Matter 7

B. Prosecution History 13

C. Priority Date 14

VI. LEVEL OF ORDINARY SKILL IN THE ART 16

VII. CLAIM CONSTRUCTION 16

A. Terms Governed By 35 U.S.C. § 112, ¶6 16

B. Additional Terms of the '075 Patent 18

VIII. SUMMARY OF PRIOR ART 19

A. *Rosen* (EX1005) 19

B. *Rosen-II* (EX1006) 21

C. *Smith* (EX1007) 23

IX. THE ASSERTED GROUND OF INVALIDITY 26

A. Ground 1: Claims 1-4 and 11-15 are obvious over *Rosen* in view of *Rosen-II* and *Smith*. 26

1. Claim 1 27

i. Preamble 1[Pre] 27

ii. Element 1[a] 28

iii. Element 1[b] 30

(a) Rationale and motivation for combining *Rosen-II* with *Rosen*. 36

iv. Elements 1[c]-1[f] 43

v. Elements 1[g]-1[h] 44

vi. Element 1[i].....46

vii. Element 1[j].....53

viii. Element 1[k].....57

ix. Element 1[l].....59

x. Element 1[m].....61

xi. Element 1[n].....65

(a) Rationale and motivation for combining *Rosen* with *Smith*.....69

xii. Element 1[o].....73

2. Claim 2 76

3. Claim 3 77

4. Claim 4 78

5. Claim 11 83

6. Claim 12 83

7. Claim 13 84

8. Claim 14 84

9. Claim 15 85

X. SECONDARY CONSIDERATIONS 86

XI. INSTITUTION SHOULD BE GRANTED 86

A. Discretion Under 35 U.S.C. § 314(a).....86

B. Discretion Under 35 U.S.C. § 325(d).....92

XII. CONCLUSION 92

TABLE OF AUTHORITIES

Page(s)

CASES

10X Genomics, Inc. v. Bio-Rad Labs., Inc.,
IPR2020-00086, Paper 8 (P.T.A.B. Apr. 27, 2020) 18

Abbott Diabetes Care Inc. v. DexCom, Inc.,
IPR2022-00921, Paper 15 (P.T.A.B. Nov. 3, 2022).....19

Apple Inc. v. Fintiv, Inc.,
IPR2020-00019, Paper 11 (P.T.A.B. Mar. 20, 2020).....86, 87, 91

Apple Inc. v. Smart Mobile Techs. LLC,
IPR2022-00808, Paper 24 (P.T.A.B. Sept. 29, 2022).....89

Facebook, Inc. v. USC IP P'ship, L.P.,
IPR2021-00033, Paper 13 (P.T.A.B. Apr. 30, 2021) 88

Gen. Plastic Indus. Co. v. Canon Kabushiki Kaisha,
IPR2016-01357, Paper 19 (P.T.A.B. Sept. 6, 2017).....86

Google LLC v. Parus Holdings, Inc.,
IPR2020-00846, Paper 9 (P.T.A.B. Oct. 21, 2020).....88, 89, 90, 91

Halliburton Energy Servs., Inc. v. U.S. Well Servs., LLC,
IPR2021-01037, Paper 12 (P.T.A.B. Jan. 19, 2022) 87

Micron Tech., Inc. v. Godo Kaisha IP Bridge 1,
IPR2020-01008, Paper 10 (P.T.A.B. Dec. 7, 2020) 87

Micron Tech., Inc. v. Vervain, LLC,
IPR2021-01550, Paper 11 (P.T.A.B. Apr. 11, 2022) 88

Microsoft Corp. v. WSOU Invs., LLC,
IPR2021-00930, Paper 8 (P.T.A.B. Dec. 2, 2021) 88

NHK Spring Co., Ltd. v. Intri-Plex Techs., Inc.,
IPR2018-00752, Paper 8 (P.T.A.B. Sept. 12, 2018).....86

Nidec Motor Corp. v. Zhongshan Broad Ocean Motor Co. Ltd.,
868 F.3d 1013 (Fed. Cir. 2017) 16

Oticon Med. AB v. Cochlear Ltd.,
IPR2019-00975, Paper 15 (P.T.A.B. Oct. 16, 2019) 90

Qualcomm Inc. v. Apple Inc.,
24 F.4th 1367 (Fed. Cir. 2022) 26

Rosen Technologies LLC v. Lennox Industries Inc.,
Case No. 3:22-cv-00732 (N.D. Tex.) 1

Rosen Technologies LLC v. Resideo Technologies, Inc.,
Case No. 6:22-cv-00131 (W.D. Tex.) 2

Sand Revolution II, LLC v. Cont'l Intermodal Group-Trucking LLC,
IPR2019-01393, Paper 24 (P.T.A.B. Jun. 16, 2020) 87, 89, 91

Studiengesellschaft Kohle, M.B.H. v. Shell Oil Co.,
112 F.3d 1561 (Fed. Cir. 1997) 15

Verdant Environmental Technologies v. Ecobee, Inc.,
Case No 1:10-cv-02771 (N.D. Ill.) 2

Williamson v. Citrix Online, LLC,
792 F.3d 1339 (Fed. Cir. 2015) 16

OTHER AUTHORITIES

35 U.S.C. § 102 ..... 19, 21, 23, 24

35 U.S.C. § 112 ..... 15, 16, 17, 18, 73, 78

35 U.S.C. § 314(a) 86

35 U.S.C. § 318(b) 92

35 U.S.C. § 325(d) 92

37 C.F.R. § 42.8(a)(1) 1

37 C.F.R. § 42.8(b)(1) 1

37 C.F.R. § 42.8(b)(2) 1

37 C.F.R. § 42.8(b)(3) 2

37 C.F.R. § 42.8(b)(4) 3

37 C.F.R. § 42.10(b) 3

37 C.F.R. § 42.100(b) 16

37 C.F.R. § 42.104 6

Office Patent Trial Practice Guide, 77 Fed. Reg. 48759-60 1

PETITIONER'S EXHIBIT LIST

Ex[No.][1]	Description of Documents
1001	U.S. Patent No. 7,232,075 ("'075 Patent")
1002	Declaration of R. Jacob Baker, Ph.D., P.E.
1003	Prosecution File History of the '075 Patent
1004	U.S. Patent No. 7,050,026 to Rosen ("'026 Patent")
1005	U.S. Patent Application Publication No. 2003/0150926 A1 by Rosen ("*Rosen*")
1006	U.S. Patent Application Publication No. 2003/0142121 A1 by Rosen ("*Rosen-II*")
1007	International Patent Application Publication No. WO 02/48851 A2 by Smith ("*Smith*")
1008	Prosecution File History of the '026 Patent.
1009	Plaintiff's Proposed Claim Constructions, *Rosen Technologies LLC v. Lennox Industries, Inc.*, No. 3:22-cv-00732-K (N.D. Tex. Feb. 2, 2023)
1010	Defendant's Disclosure of Claim Constructions Extrinsic Evidence, *Rosen Technologies LLC v. Lennox Industries, Inc.*, No. 3:22-cv-00732-K (N.D. Tex. Feb. 2, 2023)

[1] Citations to issued patents (Exhibits 1001, 1004, 1013-1015, 1021, 1024, and 1025) are made by column and line number. Citations to U.S. patent application publications (Exhibits 1005, 1006, 1023, and 1027) and Exhibit 1002 are made by paragraph number. Citations to Exhibits 1007, 1009, 1010-1012, 1016-1019, 1022, 1026, and 1031 are to the original page numbering in the exhibits. Citations to Exhibits 1003, 1008, 1020, 1028-1030, and 1032 are to the page number added by the exhibit label.

Ex[No.][1]	Description of Documents
1011	Scheduling Order, *Rosen Technologies LLC v. Lennox Industries, Inc.*, No. 3:22-cv-00732-K (N.D. Tex. Sept. 1, 2022)
1012	Transcript of Deposition of Howard J. Rosen, December 14, 2022, *Rosen Technologies LLC v. Lennox Industries, Inc.*, No. 3:22-cv-00732-K (N.D. Tex.)
1013	U.S. Patent No. 4,071,745 to Hall ("*Hall*")
1014	U.S. Patent No. 4,382,544 to Stewart ("*Stewart*")
1015	U.S. Patent No. 4,669,654 to Levine ("*Levine*")
1016	Excerpts of IEEE Standard Dictionary of Electrical and Electronics Terms, Fourth Edition, ANSI/IEEE Std 100-1988 (Nov. 3, 1988)
1017	R.L. Timings and P. Twigg, The Pocket Illustrated Dictionary of Engineering Terms (2001)
1018	International Patent Application Publication No. WO 03/040839 by Geiwitz ("*Geiwitz*")
1019	Cardio manual, Secant home automation inc ("Cardio Manual")
1020	Statutory Disclaimer filed in U.S. Patent Application No. 10/060,768
1021	U.S. Patent No. 6,161,133 to Kikinis ("*Kikinis*")
1022	Gillett et al., A Taxonomy of Internet Appliances (September 2000)
1023	U.S. Patent Application Publication No. 2002/0083121 by Chang ("*Chang*")
1024	U.S. Patent No. 5,848,064 to Cowan ("*Cowan*")
1025	U.S. Patent No. 5,619,250 to McClellan ("*McClellan*")
1026	Joint Claim Construction and Prehearing Statement, *Rosen Technologies LLC v. Lennox Industries, Inc.*, No. 3:22-cv-00732-K (N.D. Tex. Feb. 23, 2023)

Ex[No.][1]	Description of Documents
1027	European Patent Application Publication No. EP2053505 A2 by Britt ("*Britt*")
1028	Andrew T. Dufresne, Nathan K. Kelley, & Lori Gordon, *How reliable are trial dates relied on by the PTAB in the Fintiv analysis?*, PERKINS COIE 1600 PTAB & BEYOND, Oct. 29, 2021
1029	Dani Kass, *Fintiv Fails: PTAB Uses 'Remarkably Inaccurate' Trial Dates*, LAW360, Nov. 2, 2021
1030	Order Granting Unopposed Motion to Amend Scheduling Order, *Rosen Technologies LLC v. Lennox Industries, Inc.*, No. 3:22-cv-00732-K (N.D. Tex. Mar. 13, 2023)
1031	Katherine K. Vidal, Memorandum: Interim Procedure for Discretionary Denials in AIA Post-Grant Proceedings with Parallel District Court Litigation (June 21, 2022)
1032	Plaintiff's Amended Disclosure of Asserted Claims and Preliminary Infringement Contentions, *Rosen Technologies LLC v. Lennox Industries, Inc.*, No. 3:22-cv-00732-K (N.D. Tex. Nov. 21, 2022)

I. INTRODUCTION

Lennox Industries Inc. ("Petitioner" or "Lennox") respectfully submits this Petition for *inter partes* review ("IPR") of Claims 1-4 and 11-15 (the "Challenged Claims") of U.S. Patent No. 7,232,075 (the "'075 Patent"). Petitioner respectfully requests institution of IPR and a finding that the Challenged Claims are unpatentable.

II. MANDATORY NOTICES UNDER 37 C.F.R. 42.8(a)(1)

A. Real Party-in-Interest under 37 C.F.R. 42.8(b)(1)

The real parties-in-interest are Lennox Industries Inc., Lennox International Inc., Heatcraft Inc., Heatcraft Technologies Inc., and Lennox Procurement Company Inc. Lennox Industries Inc. is the Petitioner. Lennox Industries Inc., Heatcraft Inc., Heatcraft Technologies Inc., and Lennox Procurement Company Inc. are wholly owned subsidiaries of Lennox International Inc. No other parties exercised or could have exercised control over this Petition; no other parties funded or directed this Petition. *See* Office Patent Trial Practice Guide, 77 Fed. Reg. 48759-60.

B. Related Matters under 37 C.F.R. 42.8(b)(2)

As of the filing date of this Petition, and to the best knowledge of Petitioner, the '075 Patent is involved in the following:

Rosen Technologies LLC v. Lennox Industries Inc., Case No. 3:22-cv-00732 (N.D. Tex.) ("NDTX Litigation"). The '075 Patent was first asserted against Petitioner in a Complaint for Patent Infringement filed on March 31, 2022. Petitioner moved to dismiss the complaint on June 21, 2022. On January 4, 2023,

Petitioner's motion to dismiss was granted in part and denied in part.

As of the filing date of this Petition, and to the best knowledge of Petitioner, the '075 Patent has been involved in the following proceedings in which Petitioner was not a party:

Rosen Technologies LLC v. Resideo Technologies, Inc., Case No. 6:22-cv-00131 (W.D. Tex.) (dismissed on October 27, 2022); and

Verdant Environmental Technologies v. Ecobee, Inc., Case No 1:10-cv-02771 (N.D. Ill.) (closed pursuant to notice of voluntary dismissal on November 1, 2010).

C. Lead and Back-Up Counsel under 37 C.F.R. 42.8(b)(3)

Petitioner provides the following designation of counsel:

LEAD COUNSEL	BACK-UP COUNSEL
David G. Wille (Reg. No. 38,363) **BAKER BOTTS L.L.P.** 2001 Ross Avenue, Suite 900 Dallas, TX 75201-2980 Tel: 214-953-6595 david.wille@bakerbotts.com	Samir A. Bhavsar (Reg. No. 41,617) Tel: 214-953-6581 samir.bhavsar@bakerbotts.com Clarke W. Stavinoha (Reg. No. 71,152) Tel: 214-953-6484 clarke.stavinoha@bakerbotts.com Melissa Muenks (Reg. No. 78,860) Tel: 214-953-6949 melissa.muenks@bakerbotts.com Caroline Duncan (Reg. No. 79,897) Tel: 214-953-6514 caroline.duncan@bakerbotts.com **BAKER BOTTS L.L.P.** 2001 Ross Avenue, Suite 900 Dallas, TX 75201-2980

D. Service Information under 37 C.F.R. 42.8(b)(4)

A copy of this entire Petition, including all Exhibits and a power of attorney, is being served by FEDERAL EXPRESS, costs prepaid, to the address of the attorney or agent of record for the ’075 Patent at the USPTO: Marc Hankin, Hankin Patent Law, APC, 12400 Wilshire Boulevard, Suite 1265, Los Angeles, CA 90025; and to the address of the attorney or agent of record for Patent Owner in the NDTX Litigation: Hao Ni, NI, WANG & MASSAND, PLLC, 8140 Walnut Hill Ln., Ste. 500, Dallas, TX 75231.

Please address all correspondence to lead and back-up counsel. Petitioner consents to service at lead counsel’s address provided above. Petitioner consents to electronic service, provided it is made to all of the following e-mail addresses:

- david.wille@bakerbotts.com;
- samir.bhavsar@bakerbotts.com;
- clarke.stavinoha@bakerbotts.com;
- melissa.muenks@bakerbotts.com; and
- caroline.duncan@bakerbotts.com.

A Power of Attorney is filed concurrently herewith under 37 C.F.R. § 42.10(b).

III. CLAIM LISTING

A. Claim 1

1[Pre]	A thermostat system for controlling space conditioning equipment

	comprising:
1[a]	A) a temperature sensor for providing an electrical signal indicative of the temperature of a conditioned space in which the temperature sensor is situated;
1[b]	B) a transparent touch pad juxtaposed over a liquid crystal display to constitute a touch screen for interactive interface with a user and for selectively displaying alphanumeric and graphic devices;
1[c]	C) a processor, said processor including 1) a central processing unit;
1[d]	2) a real time clock;
1[e]	3) a memory coupled to said central processing unit for storing program and data information; and
1[f]	4) an input/output unit including:
1[g]	a) a sensor input coupled to said temperature sensor for receiving said electrical signal therefrom;
1[h]	b) a control output coupled to the space conditioning equipment for issuing control signals thereto; and
1[i]	c) a communications interface adapted to establish communications between said processor and a first remote correspondent which is a source of functional programming; and
1[j]	D) a control program stored in said memory for causing said central processing unit to selectively: 1) establish on said liquid crystal display one or more representations of buttons at a separated and predetermined positions;
1[k]	2) read the position on the touch pad juxtaposed with said predetermined position to determine if said representation of a button has been touched; and
1[l]	3) if said a representation of a button has been touched, processing this information to establish a condition incorporated into the operation of said thermostat system;

1[m]	4) establish communications between said processor and a first remote correspondent from which is transferred to said memory one or more modules of functional programming; and
1[n]	5) operate said transferred functional programming to change or add to representations on the touch screen, where said changes or additions of representation on the touch screen were not available to the control program before their transfer to the memory;
1[o]	E) means coupling said communications interface and said first remote correspondent.

B. Claim 2

2	The system of claim 1 in which in which said communications interface includes a modem.

C. Claim 3

3	The system of claim 1 in which said communications interface is coupled to an external modem.

D. Claim 4

4	The system of claim 1 in which transferred functional programming modules comprise means for controlling space conditioning equipment.

E. Claim 11

11	The system of claim 1 in which in which said functional programming determines all or part of a graphical user interface.

F. Claim 12

12	The system of claim 1 in which in which said functional programming determines size, shape, colors, legends, locations, or other viewable aspects of said buttons on the display.

G. Claim 13

13	The system of claim 1 in which in which said functional programming determines representations of the size, shape, colors, locations and other viewable aspects of text or graphic devices on the display.

H. Claim 14

14	The system of claim 1 in which in which said functional programming determines operational algorithms other than those for the graphical user interface.

I. Claim 15

15	The system of claim 1 in which in which said functional programming determines operational algorithms for control of existing or newly installed space conditioning equipment.

IV. REQUIREMENTS UNDER 37 C.F.R. 42.104

A. Grounds for Standing

Petitioner certifies that the ’075 Patent is available for IPR and that Petitioner is not barred or otherwise estopped.

B. Identification of Challenge and Statement of Precise Relief Requested

This IPR, supported by the declaration of R. Jacob Baker, Ph.D., P.E. (EX1002), requests cancellation of Claims 1-4 and 11-15 of the ’075 Patent under the following ground:

Ground	’075 Patent Claims	Basis for Challenge
1	1-4, 11-15	Obvious under §103 based on *Rosen* in view of *Rosen-II* and *Smith*

V. THE ’075 PATENT

A. Subject Matter

The ’075 Patent describes and claims a thermostat system for controlling space conditioning equipment. EX1001 at 14:2-3. The ’075 Patent purports to address problems with existing user interface systems for programmable thermostat systems. EX1002, ¶¶43-55; EX1001 at 2:56-64. According to the patent, “[t]here is a need for a programmable thermostat whose user interface can be easily changed after installation to accommodate equipment or control options not anticipated at installation or to change the user interface to a form not possible with a control program originally installed with the thermostat.” EX1001 at 3:5-10. To that end, the ’075 Patent describes “a programmable thermostat capable of receiving functional programming from a remote correspondent or removable media so that representations of information or touch sensitive buttons on a liquid crystal

display are changed from those available to the thermostat before said receipt of functional programming." *Id.* at 3:14-19.

Figure 1 illustrates a "space conditioning system incorporating a thermostat system employing the present invention." *Id.* at 5:7-9. The thermostat system includes "a processor 1" and "a temperature sensor 5" disposed in a conditioned space 4. *Id.* at 5:59-61. The processor includes "a central processing unit (CPU) 9 in communication with a memory 8 which stores data and program information and also, via an input/output unit (I/O unit) 10, a touch pad 11 and a liquid crystal display (LCD) 12." *Id.* at 6:1-5. A "real time clock 13" keeps time in the thermostat system to facilitate operations. *Id.* at 6:9-10. The patent's "Background of the Invention" section admits that these components were well known and used in modern thermostat systems. EX1002, ¶44; EX1001 at 1:23-27 (thermostats used "for many years"), 1:39-46 ("[m]any modern thermostat systems include a real time clock, a memory and a data processor to run a process control program"), 2:50-53 ("modern thermostat systems incorporate a touch sensitive screen" incorporating representations of buttons).

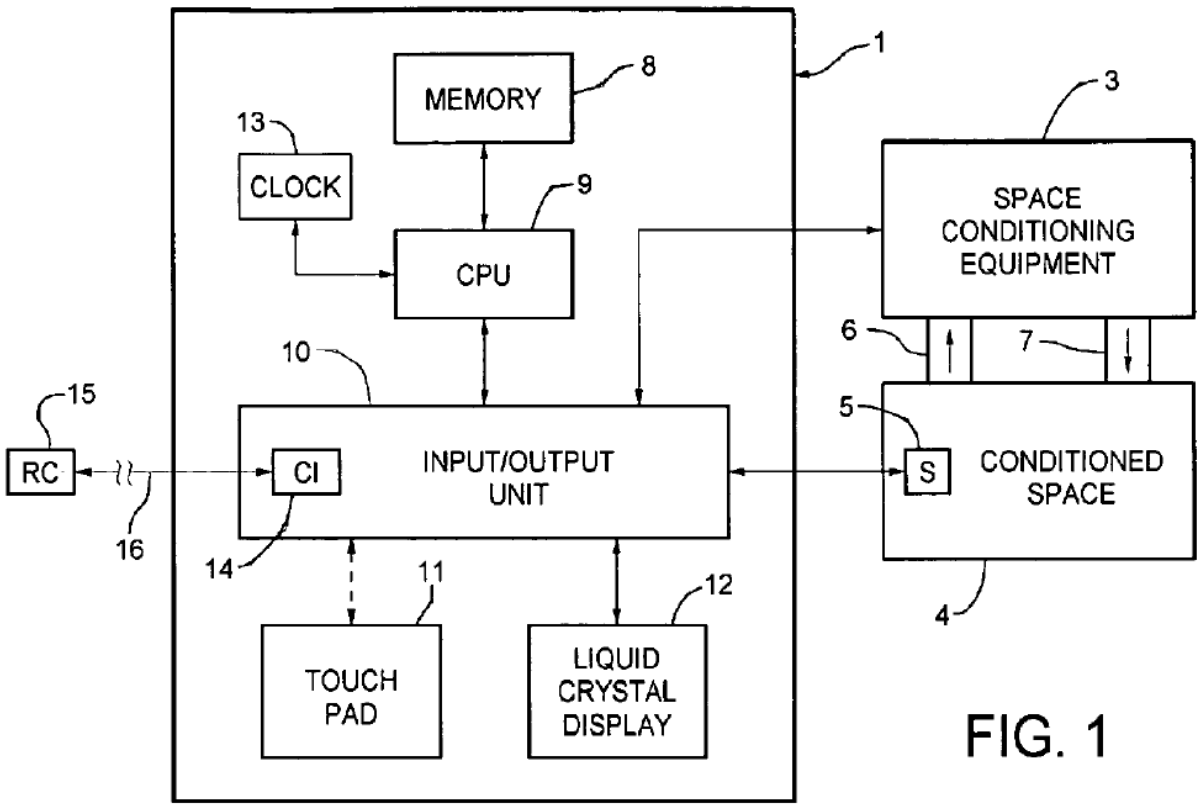

FIG. 1

EX1001 at Figure 1. Additionally, "[t]he I/O unit includes a communications interface 14 for coordinating communications between the CPU 9 and a remote correspondent 15." *Id.* at 6:12-16.

The thermostat system communicates with a remote correspondent over the Internet. *Id.* at 8:53-56. Figure 2 below illustrates "a typical coupling in which the communications interface 14 sends/receives serial data to/from an external (to the thermostat system) modem 20 via serial link 16." *Id.* at 8:56-59. "The modem conventionally interfaces with an Internet Service Provider (ISP) 21 which completes the communications link to the remote correspondent in the well-known manner." *Id.* at 8:59-62. Figure 3 depicts the modem "integrated into the

communications interface 14" to "eliminate the need for an external modem." *Id.* at 8:66-9:2.

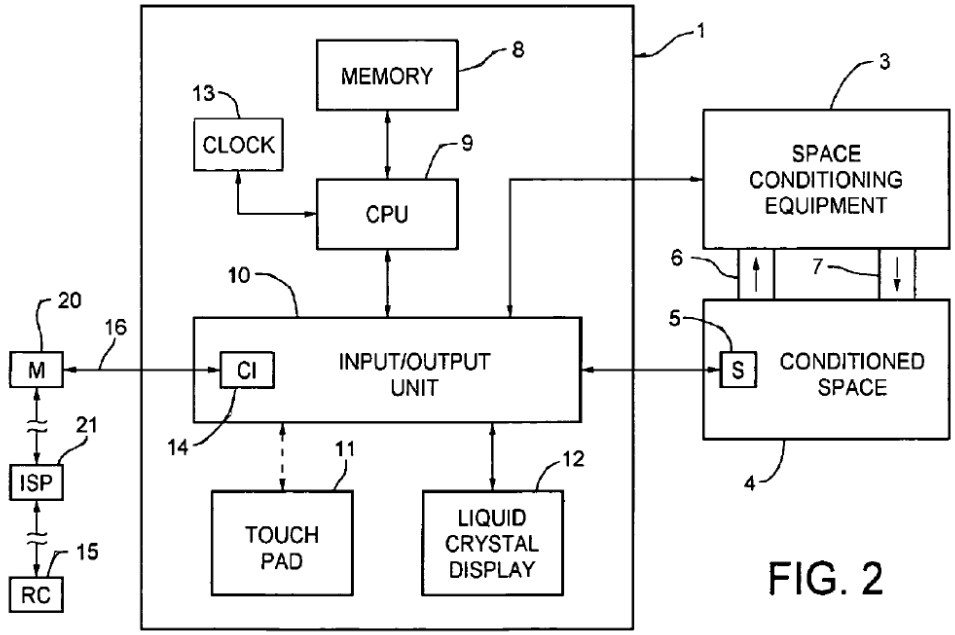

FIG. 2

Id. at Figure 2.

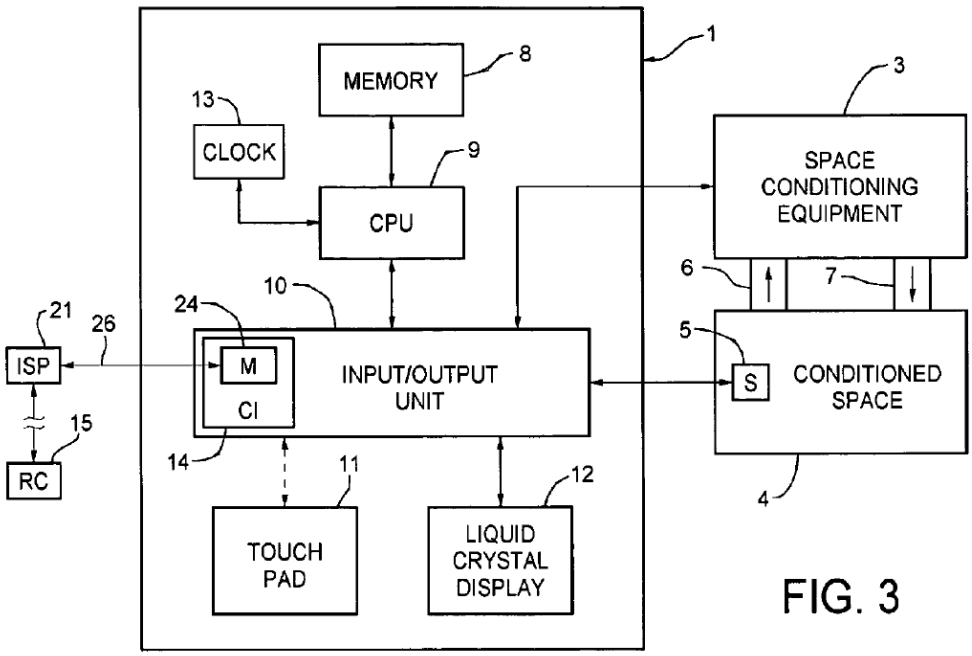

FIG. 3

Id. at Figure 3.

With respect to "a functional programming embodiment," the '075 Patent describes a control program stored in memory 8 that "enable[es] functions of the programmable thermostat[.]" *Id.* at 9:31-34. Figure 8 depicts a high-level flow chart describing obtaining and incorporating functional programming with the control program. *Id.* at 5:28-30.

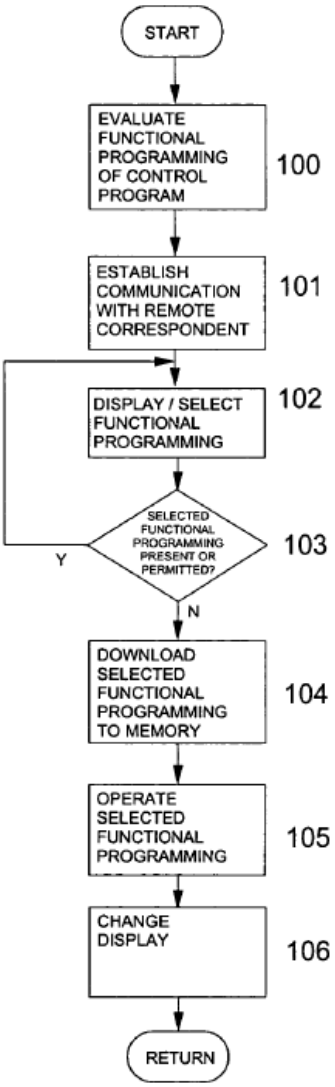

FIG. 8

Id. at Figure 8. At the election of a user, the CPU at step 101 signals the I/O unit to facilitate the communications interface to establish communications with a remote

correspondent. *Id.* at 9:49-56. The remote correspondent has a known data communications address and is a source of functional programming. *Id.* at 9:58-60. At step 102, a user is shown available functional programming and makes a selection. *Id.* at 9:60-64. At step 105, the selected functional programming is transferred and becomes part of the control program. *Id.* at 9:65-66. At step 106, the selected functional programming causes a change in the touch pad 11 and/or LCD 12. *Id.* at 9:66-10:2.

The ’075 Patent provides examples of functional programming including: “one or more entire graphical user interfaces as represented on a touchscreen,” “portions of a graphical user interface,” “representations of the size, shape, colors, legends, locations, and other viewable aspects of virtual buttons on the touchscreen,” “representations of the size, shape, colors, locations, and other viewable aspects of text or graphic devices on the touchscreen,” and “operational algorithms” for “the control program other than those for the graphical user interface,” for “control of existing or newly installed space conditioning equipment,” and “for communications with existing or newly installed environmental sensors.” *Id.* at 10:35-54.

According to the ’075 Patent, “[f]unctional programming” does not include “data-only transfers.” *Id.* at 11:4-6. The ’075 Patent does not define “data-only transfers,” but a POSITA would have understood from the disclosure of the ’075 Patent that “data-only transfers” refers to transfers of information such as “current

local weather information" or "current stock quotations" described in connection with a "first embodiment" of the '075 Patent, as opposed to functional programming that "is transferred and becomes part of the control program" in order to change or add representations on the touch screen. EX1002, ¶¶53-55; EX1001 at 6:49-8:3, 9:18-23, 9:31-32, 9:65-10:2, 10:34-11:3, 14:41-46.

B. Prosecution History

The '075 Patent was filed as Application No. 11/039,180 on January 19, 2005. EX1001 at Cover; EX1002, ¶¶57-59. The '075 Patent claims priority as a continuation-in-part of Application No. 10/440,474 (the "'474 Application"), filed on May 15, 2003, now U.S. Patent No. 7,050,026 (the "'026 Patent"). EX1001 at Cover. As discussed below, the '075 Patent is not entitled to the benefit of the filing date of the '474 Application. *Infra*, §V.C; EX1002, ¶¶60-62.

After the application was filed, the USPTO issued a Notice to File Missing Parts on March 7, 2005 related to failure to pay the application search fee. EX1003 at 57. The application was abandoned after no reply was received. *Id.* at 55. The applicant petitioned for revival of the application on September 26, 2006. *Id.* at 48-49. The petition was granted in a Decision mailed February 5, 2007 (*Id.* at 47) and the Notice of Abandonment was withdrawn on February 12, 2007. *Id.* at 43.

The Examiner never issued an office action rejecting the claims during prosecution. A Notice of Allowance was mailed on April 27, 2007. *Id.* at 25. In the Reasons for Allowance, the Examiner stated that "[t]he prior art does not teach the thermostat system combination as recited in independent claim 1, and in particular the details of the control program recited in subsection D in combination with the coupling means of subsection E." *Id.* at 29. Notably, the Examiner considered only seven prior art references. EX1001 at Cover; EX1003 at 31-32. No prior art used in Ground 1 was considered by the Examiner during prosecution.

C. Priority Date

The '075 Patent claims priority as a continuation-in-part of the '474 Application filed on May 15, 2003, now the '026 Patent. EX1001 at Cover. The '026 Patent relates to reverse images in a dot matrix LCD for an environmental control device. EX1004 at Title. It is unclear why the '075 Patent claimed priority as a continuation-in-part of the '474 Application because the subject matter of the '474 Application is barely discussed in the '075 Patent and none of it is claimed. EX1002, ¶60. Regardless, the Challenged Claims are not entitled to a priority date earlier than the January 19, 2005, filing date of the non-provisional application that issued as the '075 Patent. EX1002, ¶¶60-62.

Specifically, the '474 Application and the '026 Patent fail to disclose every element of independent Claim 1, from which all other claims of the '075 Patent

depend. *Id.*, ¶¶61-62. The ’474 Application and the ’026 Patent fail to disclose at least elements 1[a], 1[b], 1[c], 1[d], 1[e], 1[f], 1[g], 1[h], 1[i], 1[j], 1[k], 1[l], 1[m], 1[n], and 1[o] of Claim 1. *Compare* EX1004 (’026 Patent) *and* EX1008 at 53-68 (’474 Application as-filed) *with* EX1001 (’075 Patent) at 14:2-48 (Claim 1); EX1002, ¶61. In particular, the ’474 Application and ’026 Patent fail to disclose the functionality of the claimed “control program” related to transferring functional programming from a remote correspondent and operating the transferred functional programming to change or add to representations on the touch screen recited in elements 1[m] and 1[n]. EX1002, ¶61. These were features that the Examiner apparently considered novel over the prior art. EX1003 at 29.

As the Federal Circuit explained, “35 U.S.C. § 120 requires an applicant to meet the disclosure requirement of § 112, ¶ 1 in a single parent application in order to obtain an earlier filing date for individual claims.” *Studiengesellschaft Kohle, M.B.H. v. Shell Oil Co.*, 112 F.3d 1561, 1564 (Fed. Cir. 1997). Because the ’474 Application and the ’026 Patent fail to meet the disclosure requirements of 35 U.S.C. § 112, the ’075 Patent is not entitled to a priority date based on the ’474 Application or the ’026 Patent. Thus, the claims of the ’075 Patent are not entitled to a priority date earlier than the January 19, 2005, filing date.

VI. LEVEL OF ORDINARY SKILL IN THE ART

A person of ordinary skill in the art ("POSITA") as of January 19, 2005 would have had a Bachelor of Science degree in Electrical Engineering or a year or two of experience working with or designing processor-based systems with network connectivity. EX1002, ¶¶63-66. This level of skill is approximate, and more experience would compensate for less formal education, and vice versa. *See id.*

VII. CLAIM CONSTRUCTION

Petitioner interprets the claims "in accordance with the ordinary and customary meaning…as understood by one of ordinary skill in the art." 37 C.F.R. § 42.100(b). Except as set forth below, the Board need not construe any term to find the Challenged Claims invalid. *See Nidec Motor Corp. v. Zhongshan Broad Ocean Motor Co. Ltd.*, 868 F.3d 1013, 1017 (Fed. Cir. 2017).

A. Terms Governed By 35 U.S.C. § 112, ¶6

The Challenged Claims include certain claim elements that recite "means" for performing various functions. Element 1[o] recites "means coupling said communications interface and said first remote correspondent," and Claim 4 recites "[t]he system of claim 1 in which transferred functional programming modules comprise means for controlling space conditioning equipment." EX1001 at 14:47-48, 14:53-55. Using "the word 'means' creates a presumption that § 112, ¶6 applies." *Williamson v. Citrix Online, LLC*, 792 F.3d 1339, 1349 (Fed. Cir. 2015).

In the NDTX Litigation, the parties agree that element 1[o] and Claim 4 are governed by 35 U.S.C. § 112, ¶6. EX1009 at 5-6; EX1010 at 56, 71; EX1026 at 76-83. Petitioner has argued in the NDTX Litigation that these terms are indefinite for lacking disclosure of the corresponding structure. EX1010 at 56, 71; EX1026 at 76-77, 80. Patent Owner disagrees. EX1009 at 5-6; EX1026 at 76-77, 80. Without conceding that these claim elements satisfy 35 U.S.C. § 112, Petitioner applies Patent Owner's proposed constructions for each of these elements, without conceding they are correct.[2]

Elements	Structure and Function
1[o]: "means coupling said communications interface and said first remote correspondent,"	Function: coupling the communications interface and the first remote correspondent Structure: serial link and/or data link and any equivalents EX1001 at Abstract, Figures 1-4, 1:12-15, 3:14-20, 4:4-8, 4:59-62, 6:12-17, 6:59-7:8, 8:53-9:5, 9:49-56.
Claim 4: "means for controlling space conditioning equipment"	Function: controlling space conditioning equipment Structure: virtual buttons operating with control programs including as described in EX1001 at 11:7-13:62 and any

[2] To the extent Patent Owner subsequently argues that any of these claim elements should not be interpreted under 35 U.S.C. § 112, ¶6, the claims are still rendered invalid by the functionality disclosed in the prior art, as discussed herein.

	equivalents

EX1009 at 5-6; EX1026 at 76-77, 80; EX1002, ¶¶67-70.

If the Board disagrees with Patent Owner's proposed constructions, Petitioner submits that to the extent the '075 Patent discloses corresponding structure for element 1[o] and Claim 4, the *Rosen-Rosen-II-Smith* combination discloses the same. EX1002, ¶71. As will be evident from the invalidity analysis herein, *Rosen* and *Rosen-II* include virtually identical disclosure as the '075 Patent with respect to "coupling said communications interface and said first remote correspondent" and "controlling space conditioning equipment." *Id.*

B. Additional Terms of the '075 Patent

In the NDTX Litigation, Patent Owner contends that the claimed "sensor input coupled to said temperature sensor for receiving said electrical signal therefrom" in element 1[g], "control output coupled to the space conditioning equipment for issuing control signals thereto" in element 1[h], "control program stored in said memory for causing said central processing unit to selectively" perform functions recited in elements 1[j]-1[n] are not subject to 35 U.S.C. § 112, ¶6, and argues that these and other terms should be accorded their plain and ordinary meaning. EX1009 at 5-7; EX1026 at 83-99. Petitioner applies Patent Owner's "plain and ordinary meaning" interpretations here, without conceding they are correct. EX1002, ¶72. This approach is permitted. *See, e.g., 10X Genomics, Inc. v. Bio-*

Rad Labs., Inc., IPR2020-00086, Paper 8 at 21-22 (P.T.A.B. Apr. 27, 2020); *Abbott Diabetes Care Inc. v. DexCom, Inc.*, IPR2022-00921, Paper 15 at 7-11 (P.T.A.B. Nov. 3, 2022).

VIII. SUMMARY OF PRIOR ART

As discussed above, the ’075 Patent is not entitled to a priority date earlier than January 19, 2005. *Supra*, §V.C. Petitioner therefore relies on pre-AIA provisions for the prior art relied upon herein.

A. *Rosen* (EX1005)

Rosen (U.S. 2003/0150926 A1) published on August 14, 2003, more than one year before the January 19, 2005 priority date of the ’075 Patent. EX1005 at Cover. Accordingly, *Rosen* is prior art at least under 35 U.S.C. §§ 102(a) and (b). The inventor—Howard B. Rosen—is the same inventor as the ’075 Patent. *Compare* EX1005 at Cover *with* EX1001 at Cover. Remarkably, *Rosen* was not disclosed to the USPTO by the applicant, nor cited or considered, during prosecution. EX1001 at Cover.

Rosen describes a thermostat system similar to the one described in the ’075 Patent, and they share much of the same disclosure. EX1002, ¶¶109-112. Like the ’075 Patent, *Rosen* describes “a thermostat system incorporating a communication interface for receiving and displaying diverse information from a remote correspondent.” EX1005, ¶0001. Comparing Figure 1 of the ’075 Patent

with Figure 1 of *Rosen* shows that their thermostat systems are virtually identical:

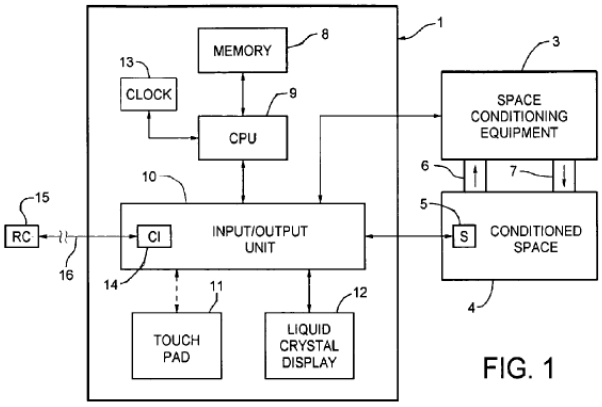

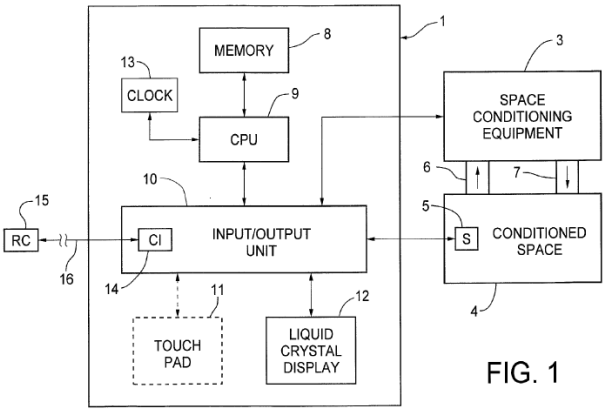

EX1001 at Figure 1 (above left); EX1005 at Figure 1 (above right); *compare* EX1001 at Figures 2-4 *with* EX1005 at Figures 2-4. Like the '075 Patent, *Rosen's* "thermostat system" includes "a processor 1" and "temperature sensor 5" disposed in a conditioned space 4. EX1005, ¶0017. *Rosen's* processor includes a real time clock and a CPU in communication with a memory that stores data and program information and also, via an I/O unit, an optional touch pad and LCD. *Id.*, ¶0018. The I/O unit includes a communications interface for coordinating communications between the CPU and a remote correspondent. *Id.*

Rosen's thermostat system obtains information (e.g., current weather information) from a remote correspondent. EX1002, ¶112. At predetermined times or on demand, the CPU issues signals to the I/O unit to cause the communications interface to establish communications with a remote correspondent. EX1005, ¶0022. The remote correspondent has a known "data communications

'address'" and is a source of current information, such as local weather. *Id.*, ¶0022. The current information may be displayed on the LCD. *See, e.g., id.*, ¶¶0023-27.

B. *Rosen-II* (EX1006)

Rosen-II (U.S. 2003/0142121 A1) published on July 31, 2003, more than one year before the January 19, 2005 priority date of the '075 Patent. EX1006 at Cover. Accordingly, *Rosen-II* is prior art to the '075 Patent at least under 35 U.S.C. §§ 102(a) and (b). The inventor is the same as the '075 Patent. *Compare* EX1006 at Cover *with* EX1001 at Cover. Remarkably, *Rosen-II* was not disclosed to the USPTO by the applicant, nor cited or considered, during prosecution. EX1001 at Cover.

Rosen-II describes "a programmable thermostat system incorporating an integrated liquid crystal display/touch pad unit, constituting a touch screen, for interactive intuitive interface with a user to facilitate programming the thermostat system." EX1006, ¶0001; EX1002, ¶¶113-115. To address drawbacks in prior art thermostat systems, *Rosen-II* "employs a different type of thermostat user interface; viz., the touch screen 2, in which the touch pad 11 and LCD 12 are integrated and coordinated[.]" EX1006, ¶¶0005, 0024. Figure 1 illustrates a programmable thermostat system similar to that of the '075 Patent and *Rosen*, which integrates the touch pad 11 and LCD 12:

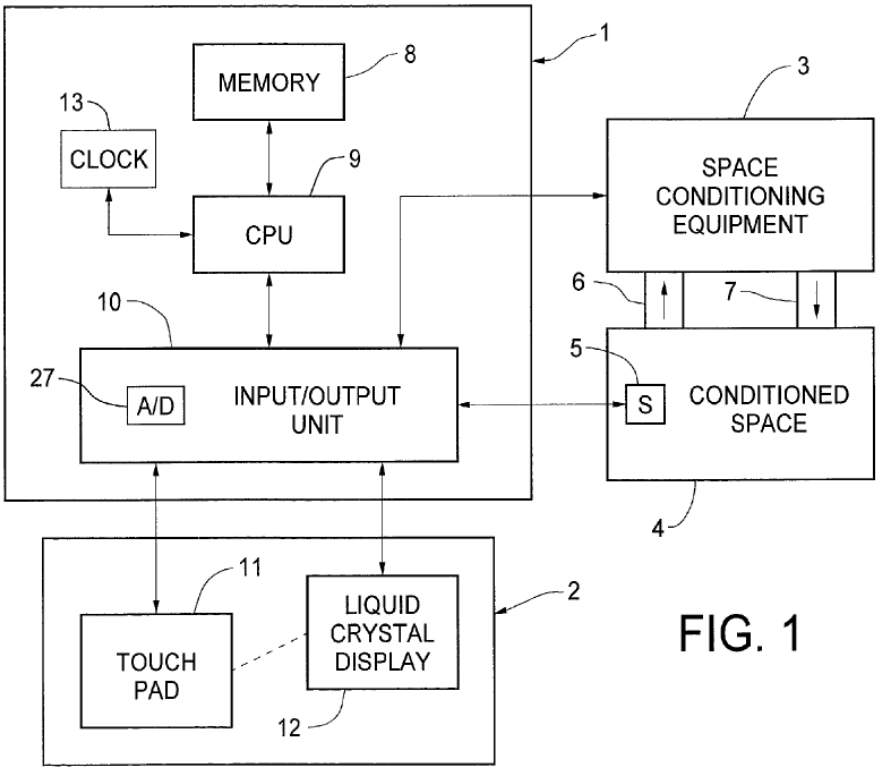

FIG. 1

Id. at Figure 1, ¶0024. Figure 2 illustrates an exploded view of an exemplary touch screen 2 of *Rosen-II*:

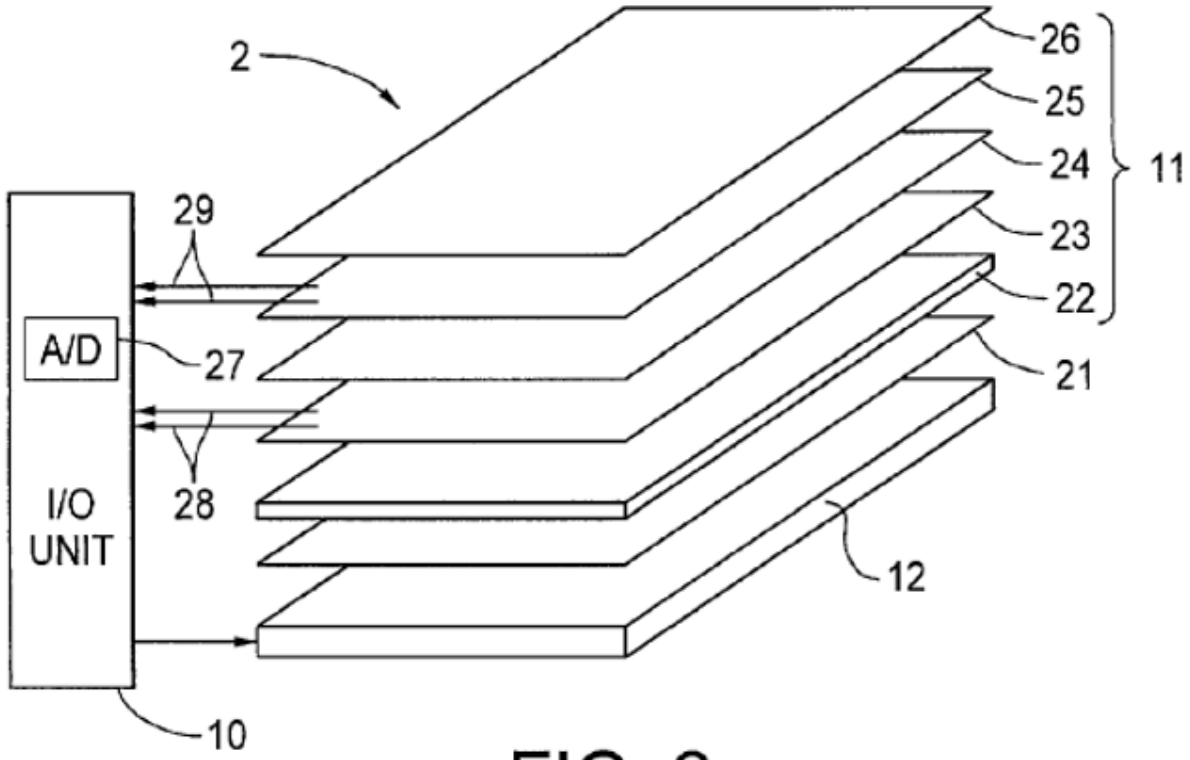

FIG. 2

Id. at Figure 2, ¶0025. *Rosen-II* describes that "[b]y the use of a touch screen constituting a transparent touch pad juxtaposed over a liquid crystal display in a programmable thermostat system, programming is greatly simplified by the fact that various menus can have ergonomically variously placed 'buttons' along with intuitively variously placed messages associated with each button." *Id.*, ¶0037.

C. *Smith* (EX1007)

Smith (WO 02/48851 A2) published on June 20, 2002, more than one year before the January 19, 2005 priority date of the '075 Patent. EX1007 at Cover. Accordingly, *Smith* is prior art to the '075 Patent at least under 35 U.S.C. §§ 102(a),

(b), and (e). *Smith* was not cited or considered during prosecution. EX1001 at Cover.

Smith "relates to thermostats" and particularly "to a multiple language user interface for such thermal comfort controllers." EX1007 at 1:6-7; EX1002, ¶¶116-118. According to *Smith*, "[w]hat is needed in the art is a user interface for a thermostat in which the temperature schedule is more easily programmed." EX1007 at 1:24-25, 1:29-30.

Similar to *Rosen*, *Rosen-II*, and the '075 Patent, *Smith* describes a user interface system for a thermal comfort controller (e.g., a thermostat) that includes a CPU, a memory, a display with a touch-sensitive screen used for input, and a network interface. *See id.* at 2:7-10. Figure 1 shows "a user interface system for a thermal comfort controller." *Id.* at 2:21-22.

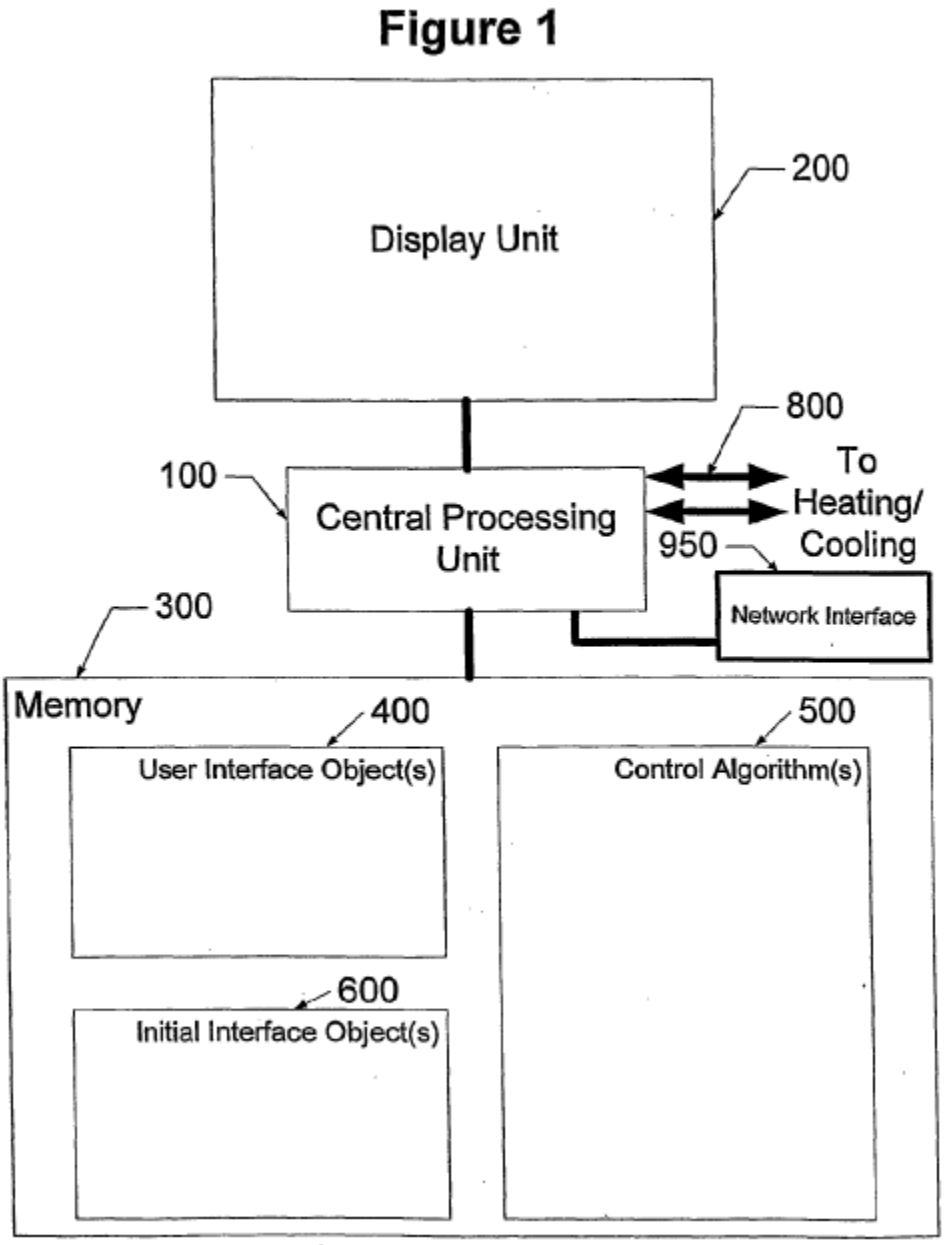

Id. at Figure 1. *Smith* describes a process by which a comfort controller is "installed without any user interface objects, initial interface objects, or control algorithms stored in memory." *Id.* at 5:8-9; EX1002, ¶118. "When first powered-up after installation, the comfort controller is programmed to load the initial interface objects 600 via the network interface 950" (e.g., from a web page on the Internet).

EX1007 at 5:10-12. The initial interface objects are downloaded and presented on the display unit to request the user to choose a preferred language. *Id.* at 5:15-16. "Once the preferred language is chosen, the proper user interface objects 400 are then downloaded." *Id.* at 5:16-17. This enables the display unit to "correctly display all of the textual information in the preferred language." *Id.* at 5:1-4. Additionally, control algorithms "may also be loaded so that the user can choose from one that is suited for the user's climate and personal preferences." *Id.* at 1:20-21, 2:18-19.

IX. THE ASSERTED GROUND OF INVALIDITY

A. Ground 1: Claims 1-4 and 11-15 are obvious over *Rosen* in view of *Rosen-II* and *Smith*.

The Challenged Claims would have been obvious over the *Rosen-Rosen-II-Smith* combination. EX1002, ¶¶103-108, 119. The claimed hardware elements were well known and used in thermostat systems for many years before the '075 Patent. *Id.*, ¶¶119, 73-93. The admissions in the specification of the '075 Patent demonstrate that these elements would have been well known to a POSITA and commercially available before the priority date. *See Qualcomm Inc. v. Apple Inc.*, 24 F.4th 1367, 1376 (Fed. Cir. 2022). It was also well known to connect appliances—such as thermostat systems—to the Internet to obtain software updates to expand, update, or change system functionality. EX1002, ¶¶119, 94-103. Every element of the claimed thermostat system is taught by the *Rosen-Rosen-II-*

Smith combination, and it would have been obvious to a POSITA to combine them to arrive at the Challenged Claims. *Id.*, ¶¶119-120.

1. Claim 1

i. Preamble 1[Pre]

If the preamble is limiting, *Rosen* discloses it. *Id.*, ¶121. Thermostats "have been used for many years" to control heating and/or cooling equipment for conditioning a space. EX1005, ¶0002. *Rosen* describes and claims "[a] thermostat system for controlling space conditioning equipment" as recited in preamble 1[Pre]. *Id.* at Claim 1, Title, Abstract. Figure 1 of *Rosen* below shows "a space conditioning system incorporating a thermostat system." *Id.*, ¶0010.

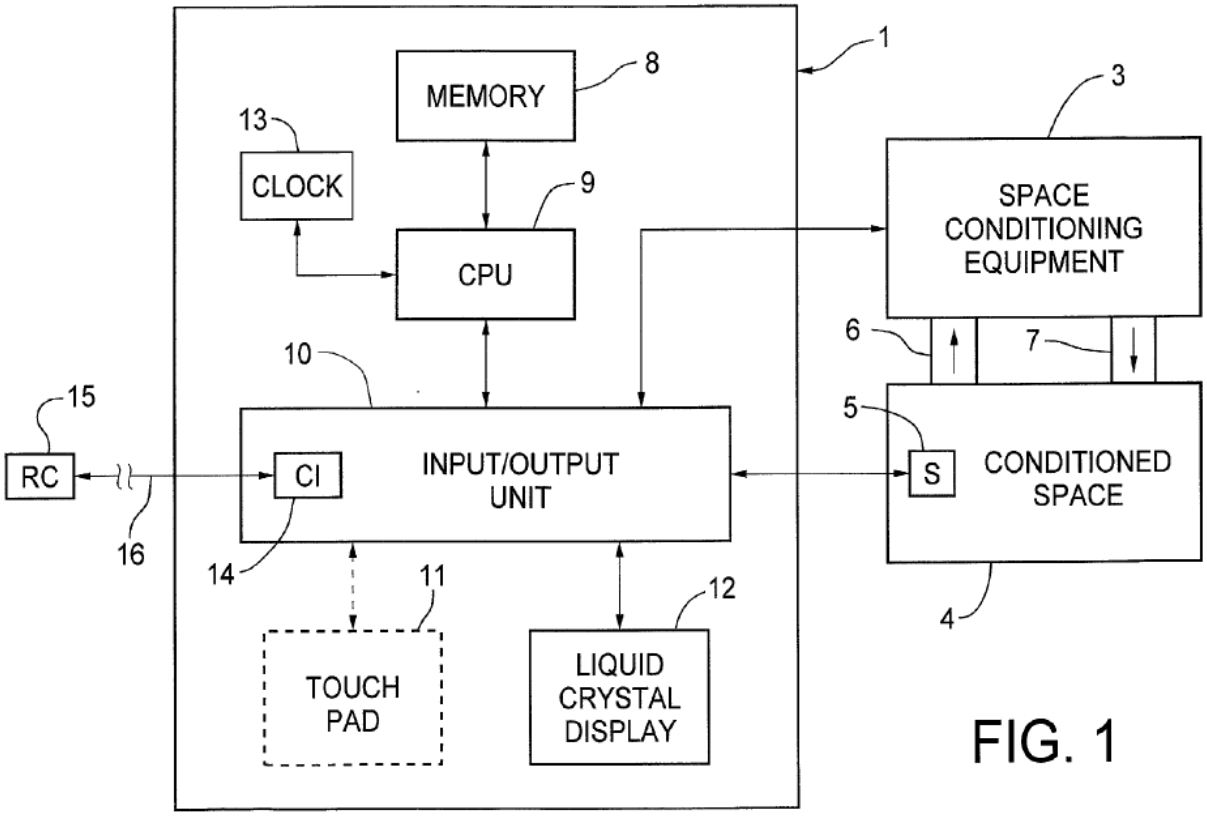

FIG. 1

Id. at Figure 1; *see also id.*, ¶0017 ("a thermostat system"), Figures 2-4 (each depicting a space conditioning system incorporating a thermostat system). Accordingly, *Rosen* discloses preamble 1[Pre]. EX1002, ¶121.

ii. Element 1[a]

Rosen discloses element 1[a]. *Id.*, ¶¶122-123. The '075 Patent does not disclose any new temperature sensor. EX1012 at 264:2-5. The use of temperature sensors with thermostat systems was well known before the priority date. *See, e.g.*, EX1002, ¶¶122, 77-82; EX1005, ¶¶0002, 0003, 0019; EX1006, ¶0022; EX1013 at 1:65-68; EX1014 at 3:47-62; EX1015 at Abstract, 2:50-53.

Rosen's thermostat system includes "a temperature sensor for providing an electrical signal indicative of the temperature of a conditioned space in which the temperature sensor is situated," as recited in element 1[a]. EX1005, ¶0007; *see also id.* at Claim 1. Figure 1 of *Rosen* illustrates "a thermostat system" that includes "a temperature sensor 5 which is disposed in a conditioned space 4."

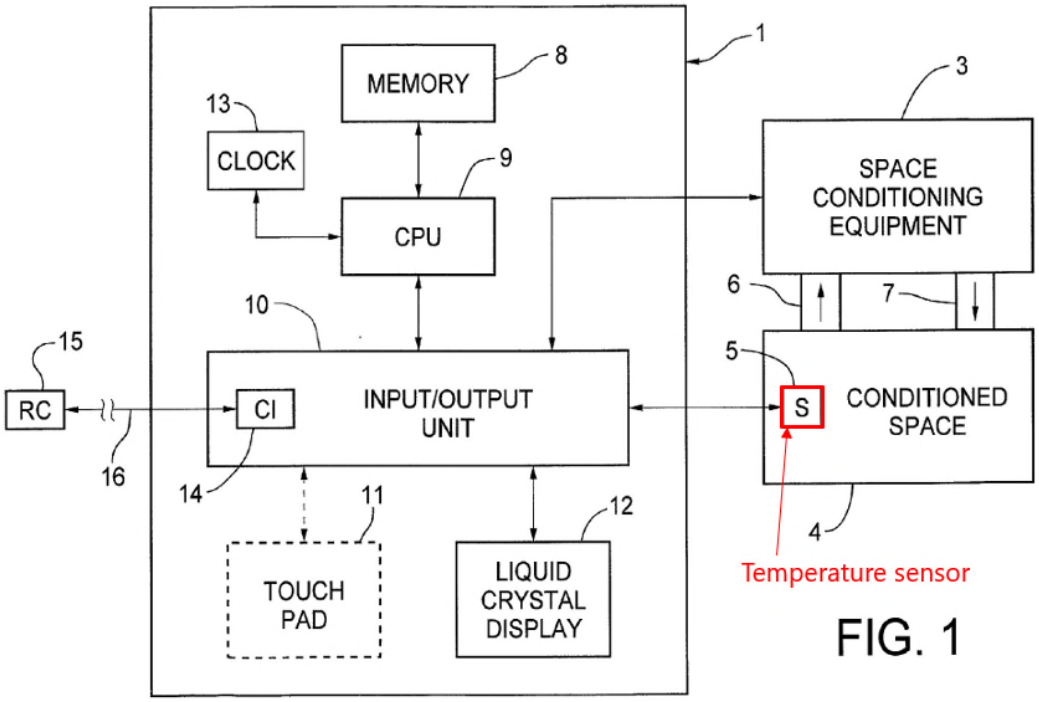

Id. at Figure 1 (annotated), ¶0017; *see also id.* at Figures 2-4 (each depicting temperature sensor 5). *Rosen* discloses that, "in the usual manner during normal operation, the temperature sensor 5 sends an electrical signal … representative of the temperature within the conditioned space 4[.]" *Id.*, ¶0019. Thus, *Rosen* discloses element 1[a]. EX1002, ¶123.

iii. Element 1[b]

Rosen in combination with *Rosen-II* discloses element 1[b]. EX1002, ¶¶124-133. *Rosen* explains that "[t]ypically, prior art programmable thermostat system [*sic*] employ a tactile touch pad with various fixed position buttons" used to program set points. EX1005, ¶0004. *Rosen's* thermostat system includes "an optional touch pad 11 and a liquid crystal display (LCD) 12," shown in Figure 1 below. *Id.*, ¶0018.

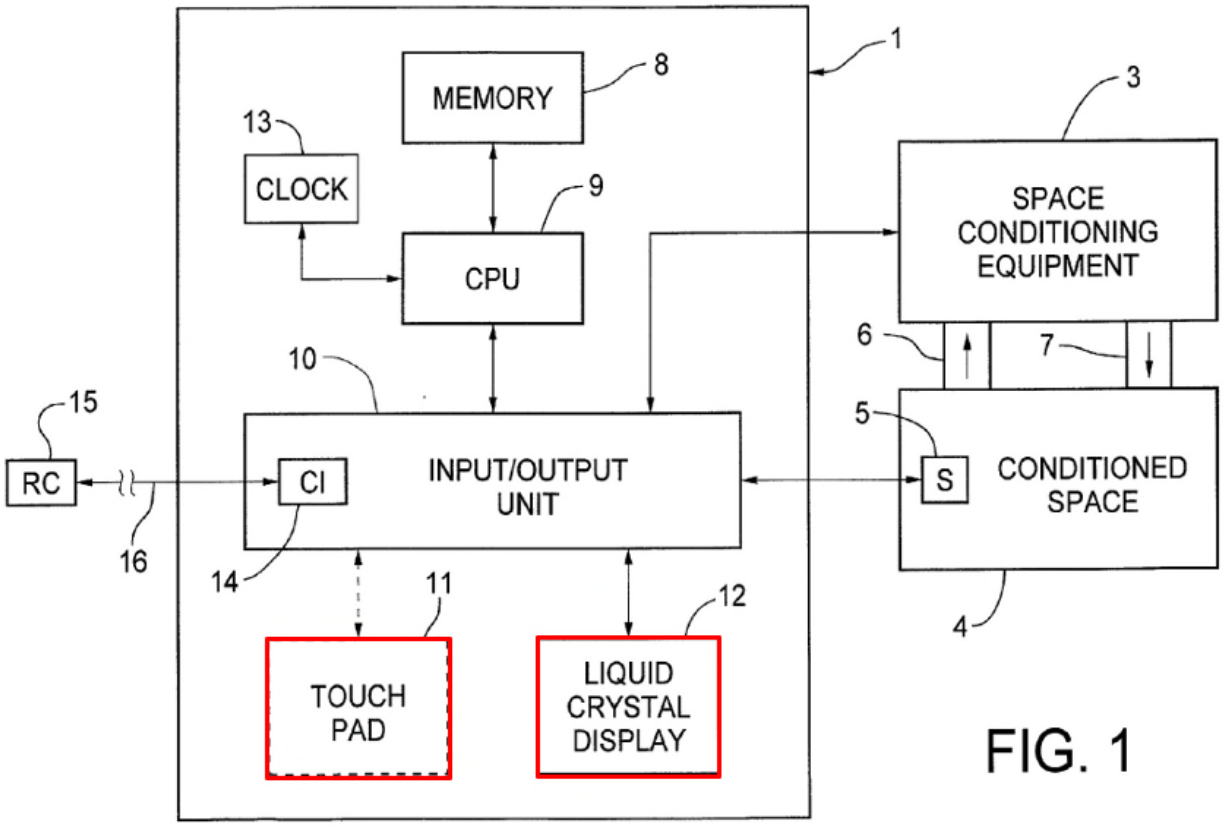

Id., Figure 1 (annotated). A user may interact with *Rosen's* thermostat system using touch pad 11 and LCD 12. EX1002, ¶125. For example, *Rosen* explains that "many modern thermostats are programmable by a user" via "a tactile touch pad

with various fixed position buttons[.]" EX1005, ¶0004; *see also id.*, ¶¶0021, 0029.

Although *Rosen* discloses a thermostat system having a touch pad and LCD for interfacing with a user, *Rosen* does not explicitly disclose "a transparent touch pad juxtaposed over a liquid crystal display to constitute a touch screen for interactive interface with a user and for selectively displaying alphanumeric and graphic devices" as claimed. EX1002, ¶126. As admitted by the '075 Patent, such touch screens were known and used in modern thermostat systems before the priority date. *Id.*; EX1001 at 2:50-53; EX1012 at 263:24-264:1; EX1007 at 3:18-4:5; EX1018 at 19:6-15; EX1019 at 1, 7. *Rosen-II* discloses this aspect of Claim 1. EX1002, ¶¶126-133.

Rosen-II discloses a programmable thermostat system that includes "a transparent touch pad juxtaposed over a liquid crystal display to constitute a touch screen for interactive interface with a user." EX1006 at Abstract; *see also id.*, ¶0001. Figure 1 of *Rosen-II* depicts "a thermostat system" including "a touch pad 11 and a liquid crystal display (LCD) 12 which constitute the touch screen 2." *Id.*, ¶0020.

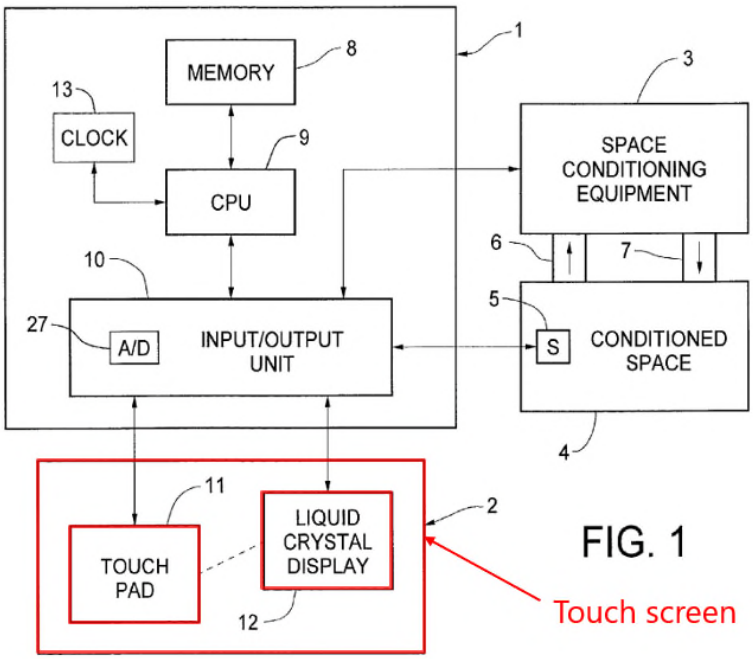

Id. at Figure 1 (annotated). Figure 2 shows "an exemplary touch screen 2" in which a transparent touch pad 11 is juxtaposed over a flat panel LCD 12. *Id.*, ¶¶0025-26.

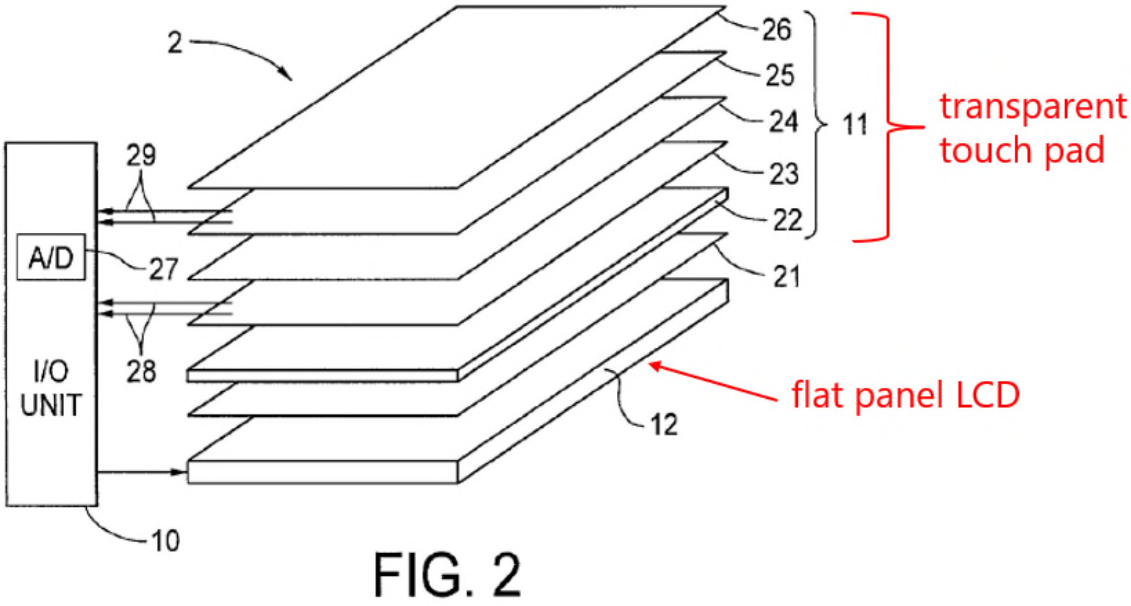

Id. at Figure 2 (annotated).

Rosen-II's touch screen is for "selectively displaying alphanumeric and graphic devices." EX1002, ¶129. *Rosen-II* explains that, by using its touch screen, "programming is greatly simplified" because "various menus can have ergonomically variously placed 'buttons' along with intuitively variously placed messages associated with each button." EX1006, ¶0037. For example, Figure 3 illustrates "a high level interactive interface displayed on the touch screen during normal operation." *Id.*, ¶0011. Figure 3 depicts "buttons 30, 31, and 32" as well as "an alphanumeric message to the left of the button 32." *Id.*, ¶¶0028-29.

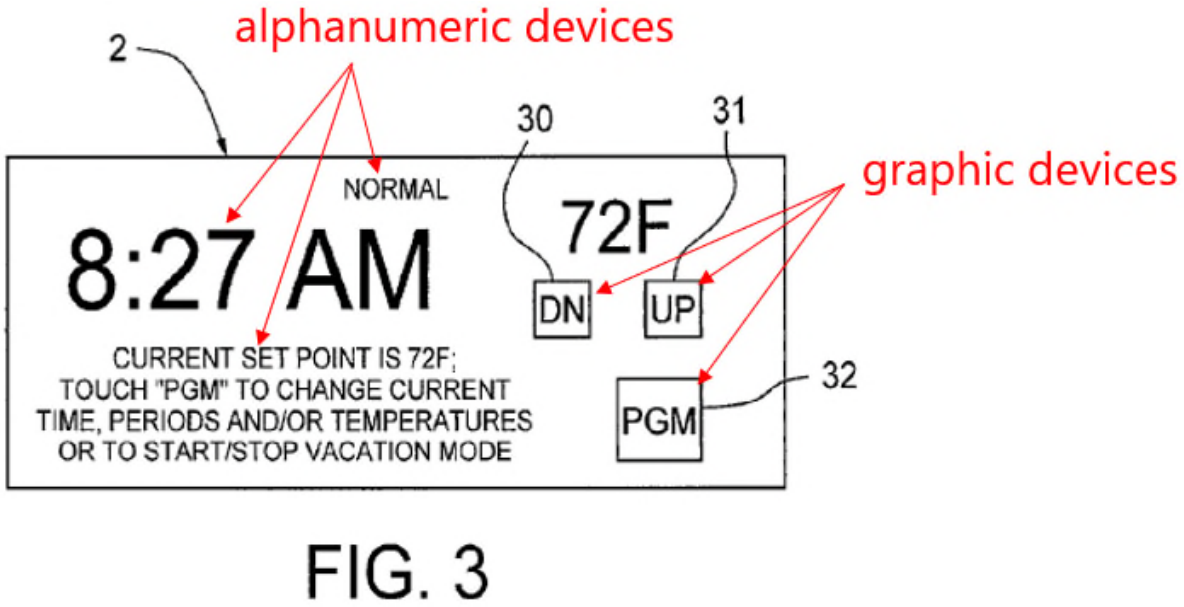

FIG. 3

Id. at Figure 2 (annotated).

The "buttons" of *Rosen-II* are one example of the claimed "graphic devices" and the "messages associated with each button" are examples of the claimed "alphanumeric" devices. EX1002, ¶130. The '075 Patent explains that "text and

graphic devices" are "viewable on the LCD 12" and that "text or graphic devices … form a part of a display." EX1001 at 9:40-43, 4:12-16. The "messages" in *Rosen-II* are text viewable on the display and would have been understood by a POSITA to be "alphanumeric devices." EX1002, ¶130. Additionally, the "buttons" viewable on the display would have been understood by a POSITA to be "graphic devices." *Id.* Buttons with text would also have been understood to be "alphanumeric devices." *Id.*

Rosen-II's disclosure that "various menus" can have variously placed buttons and messages discloses "selectively displaying" alphanumeric and graphic devices as claimed. *Id.*, ¶131. In addition to the "high level interactive interface" in Figure 3 above, *Rosen-II* discloses "intermediate" and "low level" interactive interfaces displayed on the touch screen during normal operations, shown in Figures 4 and 5 below, respectively. EX1006, ¶¶0012-13. A user can access different interactive interfaces (menus) by pressing buttons on the touch screen. *Id.*, ¶¶0029 (describing transition from Figure 3 to Figure 4), 0032 (describing transition from Figure 4 to Figure 5).

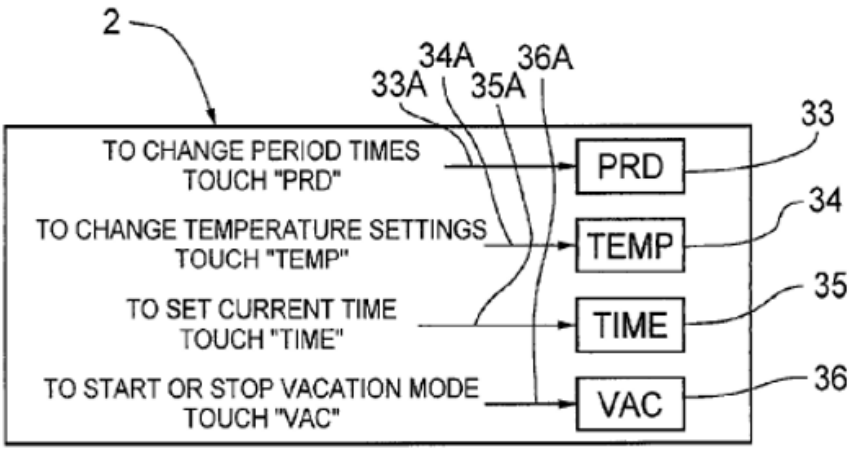

FIG. 4

Id. at Figure 4.[3]

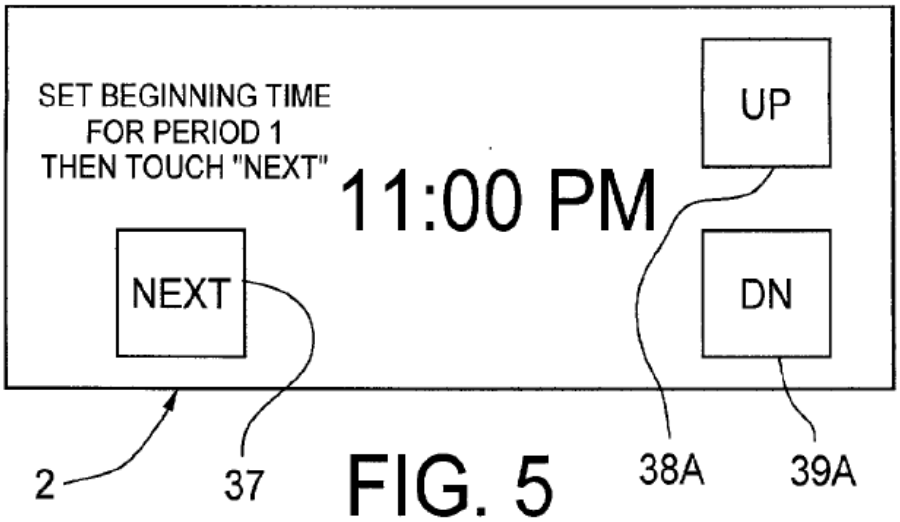

FIG. 5

Id. at Figure 5. As seen above, each of the interactive interfaces in Figures 3, 4, and 5, respectively, has a different arrangement of text (i.e., alphanumeric devices)

[3] In addition to buttons 33-36, the "icon indicators"—shown in FIG. 4 as "arrows 33A, 34A, 35A, 36A"—are an additional example of the claimed "graphic devices." EX1006, ¶0031; EX1002, ¶131.

and buttons (i.e., graphical and/or alphanumeric devices). EX1002, ¶133. *Rosen-II* explains that "if [the positions of the choice buttons in Figure 4] are compared to the positions of the buttons 30, 31, 32 in FIG. 3, it will be seen that they would 'interfere' physically if conventional tactile buttons were used. With the present invention, however, the positions of buttons on different menus can be placed wherever it is most intuitive and convenient for the present selection of operations." EX1006, ¶0030. *Rosen-II's* approach of using a transparent touch pad juxtaposed over a liquid crystal display constituting a touch screen for displaying different arrangements of buttons and text depending on the menu selected by the user discloses or at least renders obvious a "touch screen … for selectively displaying alphanumeric and graphic devices" as claimed. EX1002, ¶133.

(a) Rationale and motivation for combining *Rosen-II* with *Rosen*.

It would have been obvious to a POSITA to combine *Rosen-II's* touch screen with the thermostat system of *Rosen*. EX1002, ¶¶134-144. Modifying *Rosen* to incorporate the touch screen of *Rosen-II* would merely involve the simple substitution of one known element (the touch pad and LCD of *Rosen*) for another (the touch screen of *Rosen-II*) to obtain predictable results (a thermostat system that includes a touch screen for interactive interface with a user and for selectively displaying alphanumeric and graphic devices). *Id.*, ¶134.

Rosen and *Rosen-II* are in the same field of endeavor and are therefore

analogous art to the ’075 Patent and each other. *Id.*, ¶135. *Rosen* and *Rosen-II* relate to “thermostats.” EX1005, ¶0001; EX1006, ¶0001. *Rosen-II’s* teachings would have motivated a POSITA to modify *Rosen* to incorporate the touch screen of *Rosen-II* to improve upon *Rosen’s* user interface. EX1002, ¶135.

Both *Rosen* and *Rosen-II* explain that typically, prior art programmable thermostat systems employ “a tactile touch pad with various fixed position buttons to be touched in a precise sequence to program set points,” and that “[t]he programming sequence may be followed on a separate display, typically a liquid crystal display.” EX1005, ¶0004; EX1006, ¶0004. *Rosen’s* thermostat system includes such an arrangement, namely an optional touch pad 11 and a separate LCD 12, shown in *Rosen’s* Figure 1 below. EX1005, ¶0018; EX1002, ¶136.

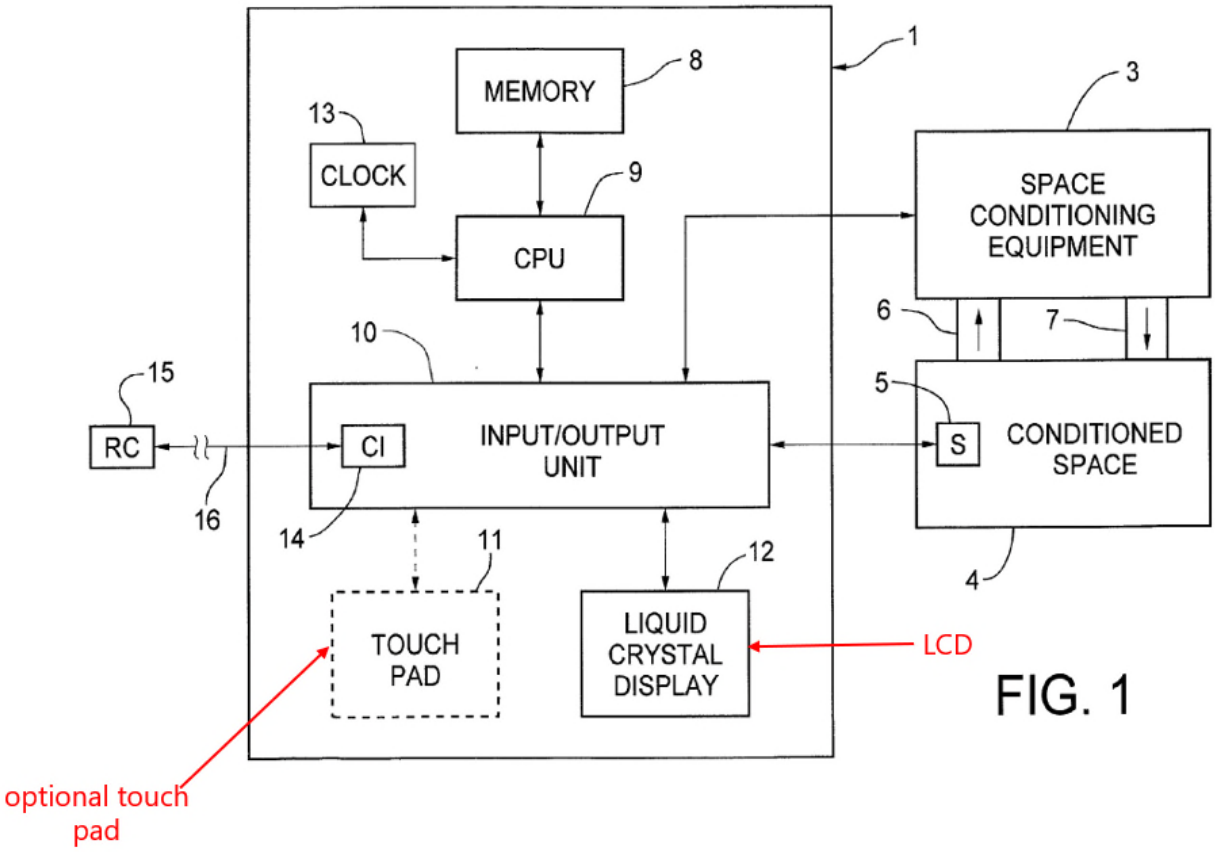

EX1005 at Figure 1 (annotated); *see also id.* at Figures 2-4 (showing optional touch pad 11 and LCD 12).

Rosen-II, however, explains that prior art programmable thermostat systems "are difficult to program and some users are unable to successfully program them." EX1006, ¶0005; EX1002, ¶137. This is because their user interfaces "are not highly intuitive." EX1006, ¶0005. The "user must usually refer to and attempt to decipher a programming manual (which is often difficult for the average user to readily understand) as the programming proceeds," and many users give up because the "process is so complex." *Id.* As a result, "the full capabilities of the

thermostat system cannot be utilized." *Id.* *Rosen-II* addresses these "drawbacks" by "employ[ing] a different type of thermostat user interface; viz., the touch screen 2, in which the touch pad 11 and LCD 12 are integrated and coordinated" and which "provides a programmable thermostat systems which is very much easier to program than in the prior art." *Id.*, ¶0024.

Rosen-II describes "advantages" of its touch screen over prior art user interfaces such as the one in *Rosen*. *Id.*, ¶0028; EX1002, ¶138. For example, buttons "can be placed wherever it is most intuitive and convenient for the present selection of operations." EX1006, ¶0030. *Rosen-II* states that "[t]his is impossible to achieve with the prior art thermostat systems and is a prime factor in the ease of programming enjoyed" by its thermostat system. *Id.* This allows "icon indicators" to be included "to further assist a user to select and touch the correct button to successfully move to the next menu or make other selections with confidence." *Id.*, ¶0031.

Thus, *Rosen-II* teaches that "[b]y the use of a touch screen constituting a transparent touch pad juxtaposed over a liquid crystal display in a programmable thermostat system, programming is greatly simplified by the fact that various menus can have ergonomically variously placed 'buttons' along with intuitively variously placed messages associated with each button." *Id.*, ¶0037. Based on the disclosures in *Rosen-II*, a POSITA would have been motivated to modify *Rosen* to

incorporate the touch screen of *Rosen-II* (i.e., the transparent touch pad juxtaposed over a liquid crystal display to constitute a touch screen for interactive interface with a user and for selectively displaying alphanumeric and graphic devices). EX1002, ¶139.

A POSITA would have had other reasons to modify *Rosen* to incorporate the touch screen of *Rosen-II*. *Id.*, ¶¶140-141. The modification would enable the size of the display to be increased. *Id.*, ¶140. Fixed buttons take up a significant amount of space (e.g., on a control panel for the thermostat system), and replacing the fixed buttons of *Rosen* with the touch screen of *Rosen-II* would eliminate the need for many, if not all, of the fixed buttons, which advantageously frees up space on the control panel and enables the use of a larger display. *Id.*

Additionally, using *Rosen-II's* touch screen would be an obvious design choice for a POSITA. *Id.*, ¶141. *Rosen* and *Rosen-II* both describe known interface options (fixed buttons and a separate LCD display in *Rosen* and a touch screen in *Rosen-II*). In designing a thermostat system, it would have been a simple matter of design choice for a POSITA as to what kind of user interface to use. *Id.*

In addition to modifying *Rosen* to include the touch screen hardware of *Rosen-II* (i.e., the transparent touch pad juxtaposed over a liquid crystal display to constitute a touch screen), a POSITA would have also been motivated to modify *Rosen's* control program to include the functionality for operation of the touch screen of

Rosen-II (e.g., by modifying *Rosen's* control program to include the functionality of *Rosen-II's* control program for "selectively establish[ing], on the liquid crystal display, a menu including a representation of a button at a predetermined XY position," "read[ing] the position on the touch pad juxtaposed with the first predetermined position to determine if the button has been touched," and "if the button has been touched, change to a different menu or establish a condition incorporated into the thermostat system operation" as described in *Rosen-II*). EX1002, ¶142; EX1006, Abstract; *see also id.* at Claims 1, 3, and 17, ¶¶0007, 0026, 0028. These aspects of *Rosen* and *Rosen-II* are discussed in more detail with respect to elements 1[j]-1[l] below. *Infra*, §§IX.A.1.vii-ix.

A POSITA would have had a reasonable expectation of success in making the combination. EX1002, ¶¶143-144. The thermostat systems in *Rosen* and *Rosen-II* are remarkably similar. *Id.*, ¶143. A comparison of Figure 1 of *Rosen* (below left) and Figure 1 of *Rosen-II* (below right) demonstrates that the systems are virtually identical but for the arrangement of the touch pad and LCD:

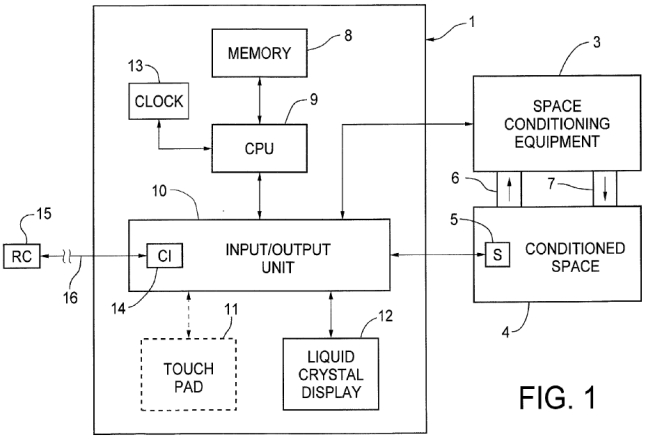

FIG. 1

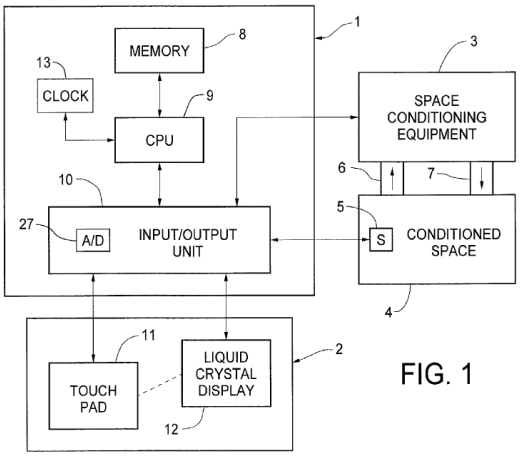

FIG. 1

EX1005 at Figure 1 (above left); EX1006 at Figure 1 (above right). Thus, a POSITA would have recognized that the touch screen of *Rosen-II* is suitable for, and could be readily incorporated in, the thermostat system of *Rosen*. EX1002, ¶143.

Moreover, a POSITA would have had an expectation of success because, like *Rosen*, *Rosen-II* explains that the components required to implement the invention "are available off-the-shelf." EX1006, ¶0023; *see also* EX1005, ¶0020 (*Rosen's* invention "only requires" the same off-the-shelf equipment); EX1002, ¶144. Additionally, *Rosen-II* explains that "several types of transparent touch screens" are "commercially available." EX1006, ¶0027. Because the systems of *Rosen* and *Rosen-II* utilize commercially available, off-the-shelf components, it would have been within the abilities of a POSITA to modify *Rosen's* system to include the touch screen of *Rosen-II* and its associated control program functionality. EX1002, ¶144; EX1012 at 264:6-265:4 (inventor of '075 Patent admitting that the hardware components in Claim 1 are off-the-shelf components used as intended).

iv. Elements 1[c]-1[f]

Rosen discloses elements 1[c]-1[f]. EX1002, ¶¶145-146. The features in elements 1[c]-1[f] were well known in the art. *Id.*, ¶¶145, 83-86; EX1012 at 262:19-263:23 (inventor of the ’075 Patent admitting that the patent does not disclose any new CPU, real time clock, memory, or input/output unit), 273:18-274:11 (elements 1[c]-1[f] were used in thermostats for many years prior to the ’075 Patent); EX1001 at 1:39-46.

Rosen’s thermostat system includes “a processor having: a CPU, real time clock and a memory for storing program and data information.” EX1005, ¶0007. Figure 1 illustrates “a thermostat system” that “includes a processor 1.” *Id.*, ¶0017. The processor includes a CPU 9 in communication with a memory 8 which stores data and program information, and also an input/output unit 10. *Id.*, ¶0018. A “settable real time clock 13” keeps time in the thermostat system. *Id.* Elements 1[c], 1[d], 1[e], and 1[f] are shown in Figure 1 below:

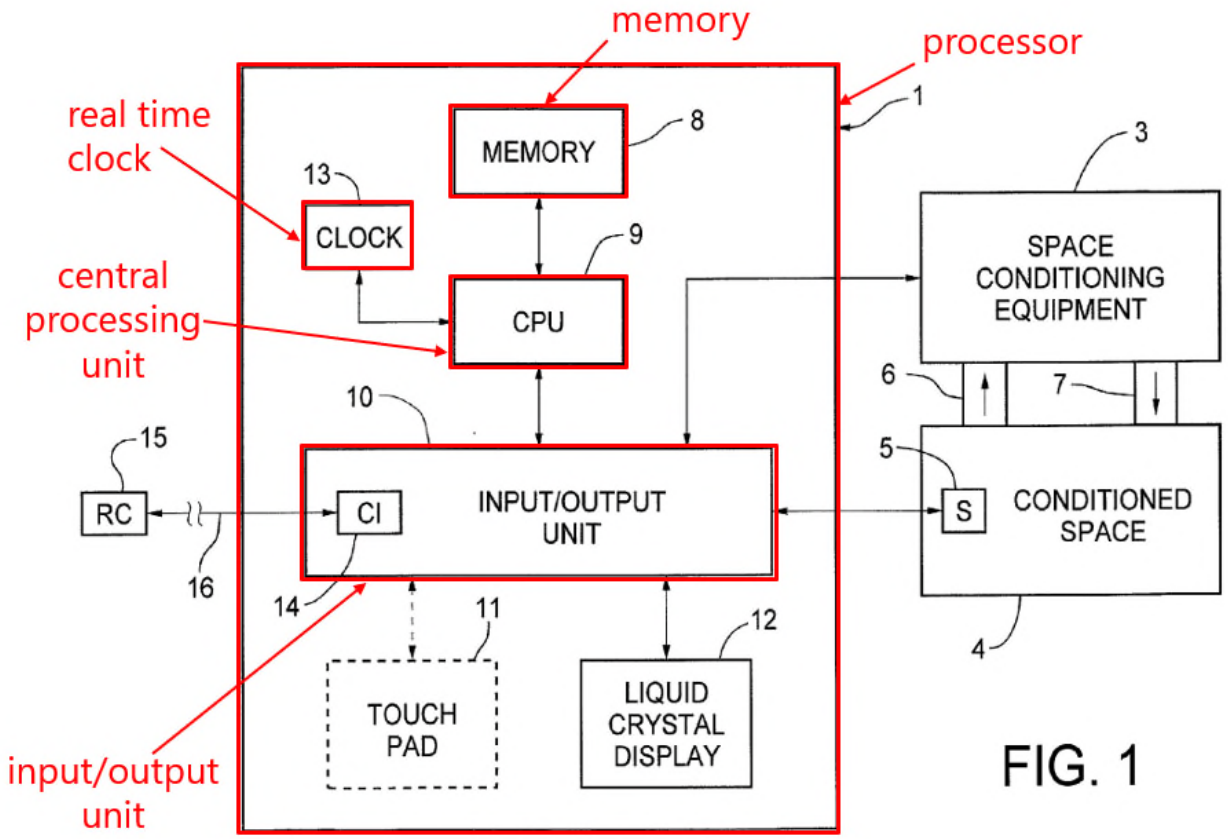

Id., Figure 1 (annotated); *see also id.* at Figures 2-4 (each depicting "processor 1" including CPU 9, real time clock 13, memory 8, and I/O unit 10), Claims 1, 11 (each reciting a processor including elements 1[c]-1[f] verbatim). As shown in Figure 1 above, "memory 8" is coupled to CPU 9. *See id.*, Figure 1; *see also id.*, ¶0018 (CPU 9 is "in communication with a memory 8"); EX1002, ¶146. Thus, *Rosen* discloses elements 1[c]-1[f]. EX1002, ¶146.

v. Elements 1[g]-1[h]

Rosen discloses elements 1[g]-1[h]. EX1002, ¶¶147-148. As discussed for element 1[f], *Rosen* discloses the claimed input/output unit. *Supra*, §IX.A.1.iv;

EX1005 at Figure 1, ¶0018; EX1002, ¶¶145-147. Elements 1[g]-1[h] were well known in the prior art. EX1012 at 274:12-23 (elements 1[g] and 1[h] used in thermostats for many years before alleged invention of the '075 Patent). *Rosen's* input/output unit includes "a) a sensor input coupled to said temperature sensor for receiving said electrical signal therefrom; [and] b) a control output coupled to the space conditioning equipment for issuing control signals thereto[.]" EX1005, Claim 1; *see also id.*, Claim 11 (reciting the same features). These features of *Rosen's* input/output unit are shown in Figure 1 below:

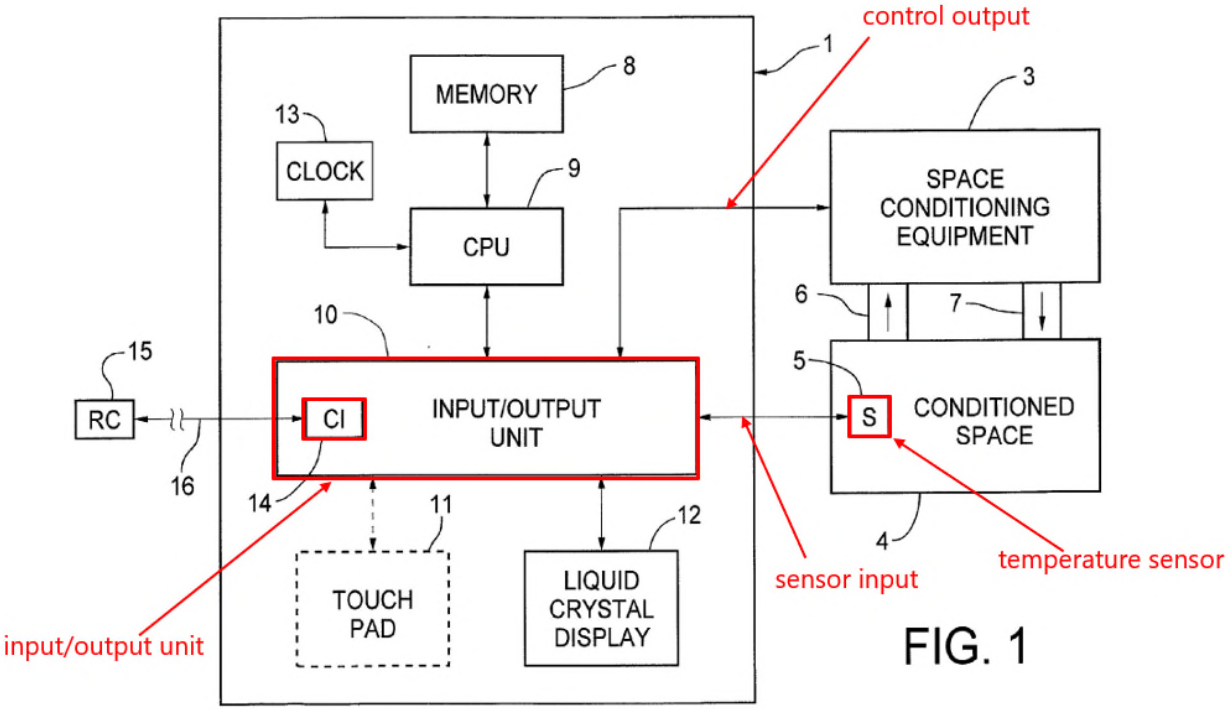

Id. at Figure 1 (annotated). *Rosen's* processor receives "an electrical signal" from the temperature sensor 5 that is representative of the temperature within the conditioned space and uses that information to "determine if control signals need to

be sent to the space conditioning equipment 3." *Id.*, ¶0019. Thus, *Rosen* discloses a processor having an I/O unit including the "sensor input" and "control output" as recited in elements 1[g] and 1[h], respectively. EX1002, ¶148.

vi. Element 1[i]

Rosen in combination with *Smith* discloses element 1[i]. *Id.*, ¶¶149-157. *Rosen* discloses the claimed input/output unit. *Supra*, §IX.A.1.iv; EX1002, ¶¶146, 149; EX1005 at Figure 1, ¶0018. Communications interfaces were well known in the prior art. EX1012 at 268:1-3. *Rosen's* input/output unit includes "a communications interface adapted to establish bi-directional communications between said processor and a remote correspondent[.]" EX1005, Claim 1; *see also id.* at Claim 11. These features of *Rosen's* input/output unit are shown in Figure 1:

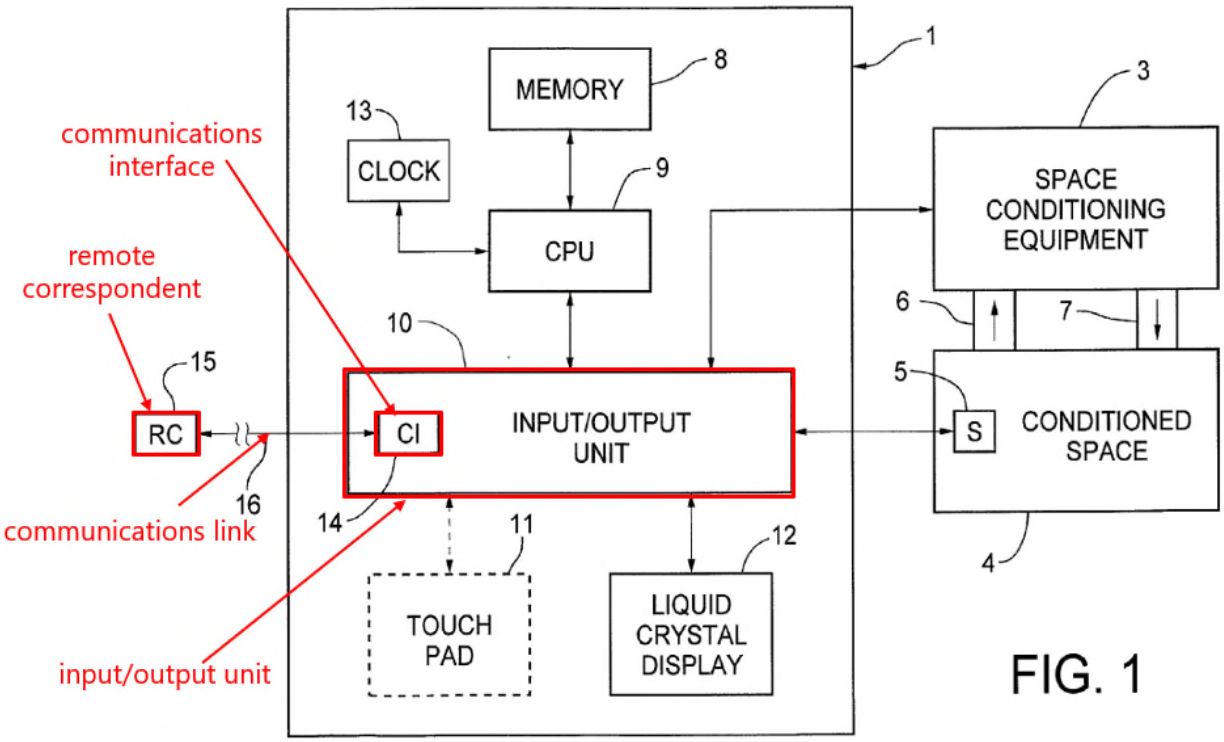

FIG. 1

Id. at Figure 1 (annotated); *see also id.* at Figures 2-4 (each disclosing an I/O unit 10 including communications interface 14 for establishing communications with a remote correspondent 15), ¶0018 (communications interface 14 may be a "conventional serial port"); EX1002, ¶¶149-150. In operation, the CPU "issu[es] signals to the I/O unit 10 to cause the communications interface 14 to establish communications, via link 16, with a remote correspondent 15." EX1005, ¶0022.

Rosen discloses establishing bi-directional communications between the processor and a remote correspondent "via the Internet or some other suitable facility." *Id.*, ¶0007. The "remote correspondent 15 has a known data communications 'address'" (e.g., an Internet address) and "is a source of current information, such as local weather." *Id.*, ¶0022; *see also id.*, ¶¶0025, 0027, 0028, 0029 (describing a "remote correspondent" that "has an Internet address").

Rosen's Figure 2 below "show[s] a typical coupling in which the communications interface 14 sends/receives serial data to/from an external (to the thermostat system) modem 20 via serial link 16." *Id.*, ¶0032. "The modem conventionally interfaces with an Internet Service Provider (ISP) 21 which completes the communications link to the remote correspondent in the well-known manner." *Id.*

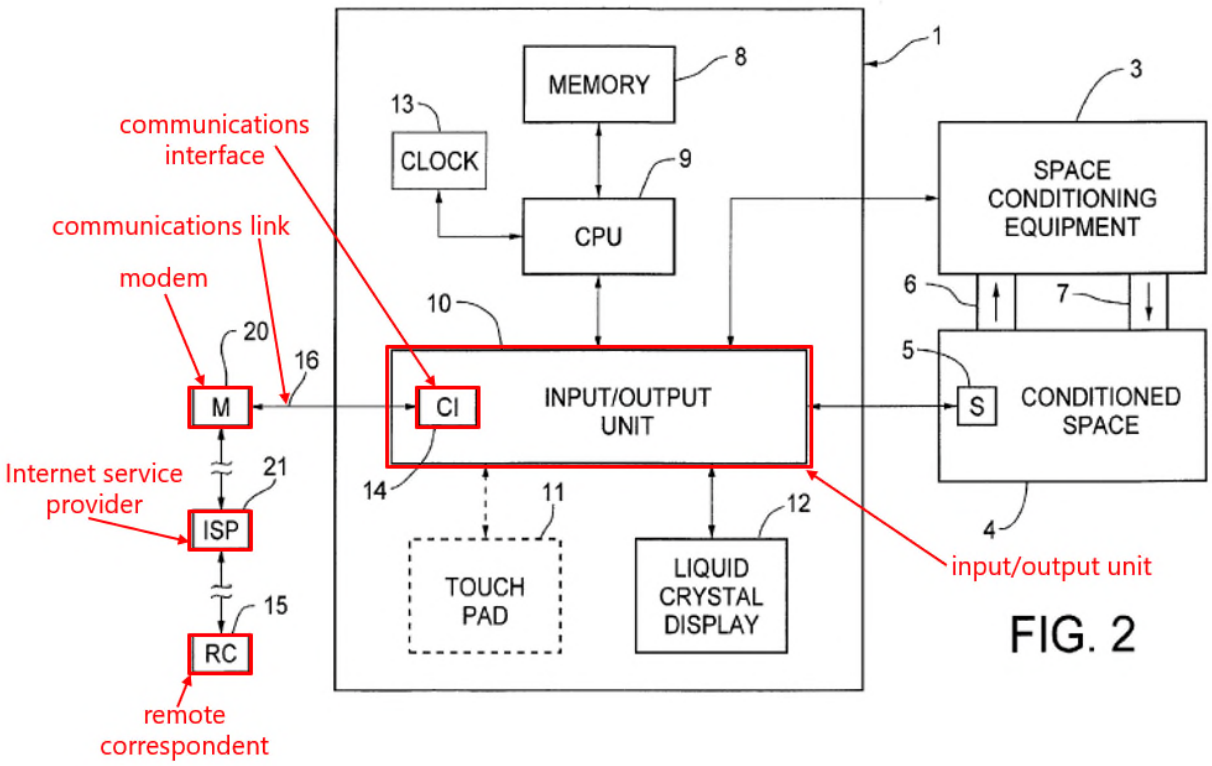

FIG. 2

Id. at Figure 2 (annotated). Thus, *Rosen* discloses "a communications interface adapted to establish communications between said processor and a first remote correspondent" as recited in element 1[i]. EX1002, ¶151.

Rosen's "remote correspondent" may be a "current source of information," such as "current weather information" (EX1005, ¶¶0008, 0022) or "current stock quotations." *Id.*, ¶0027. *Rosen* discloses that "[a] wide variety of types of information may be programmed, accessed and displayed in a like manner." *Id.* *Rosen*, however, does not explicitly disclose that the remote correspondent "is a source of functional programming" as recited in element 1[i]. It was well known that appliances such as thermostat systems can be connected to the Internet to obtain

software to expand, update, or change functionality. EX1002, ¶¶152, 94-102; EX1022 at 9 n.10; EX1021 at 4:46-52, 6:26-35; EX1018 at 9:22-24; EX1023, ¶¶0002, 0046; EX1024 at 1:6-10; EX1025 at Abstract; EX1027 at Abstract, ¶0007. *Smith* discloses this aspect of element 1[i]. EX1002, ¶¶152-157.

Similar to *Rosen*, *Smith* "relates to thermostats and other thermal comfort controllers and particularly to a multiple language user interface for such thermal comfort controllers." EX1007 at 1:6-7, 2:8-9. *Smith's* thermostat system includes a memory that "can store at least one control algorithm and at least one user interface object." *Id.* at 2:10-11; *see also id.* at 3:8-17 (describing "a memory 300" that "can store one or more user interface objects 400 and one or more control algorithms 500"). Additionally, *Smith's* thermostat system includes a CPU coupled to "a network interface" for connecting the thermostat system to a network such as the Internet. *Id.* at 2:10, 7:12-20 (Claims 2 and 4). *Smith* discloses that user interface objects and control algorithms "are loaded from the Internet" so the user can choose one that is suited for the user's climate and personal preferences. *Id.* at 2:17-19. Figure 1 of *Smith* below shows "a user interface system for a thermal comfort controller." *Id.* at 2:21-22.

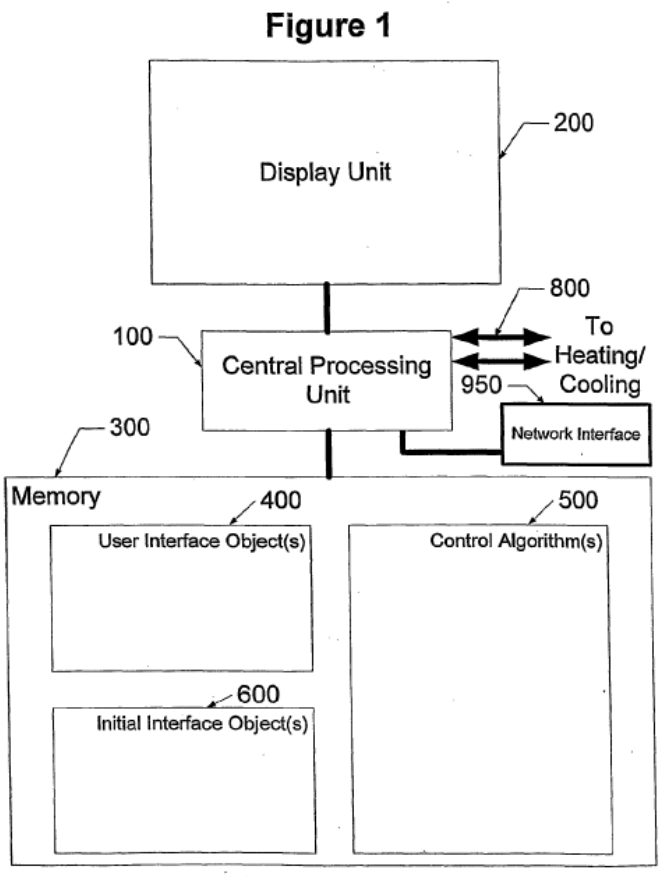

Id. at Figure 1.

Smith describes a process by which user interface objects and control algorithms are obtained (e.g., downloaded) from a web page on the Internet and loaded on its thermostat system. EX1002, ¶¶153-154. For example, in one embodiment, the comfort controller (e.g., thermostat) of *Smith* is "installed without any user interface objects, initial interface objects, or control algorithms stored in memory." EX1007 at 5:8-9. "When first powered-up after installation, the comfort controller is programmed to load the initial interface objects 600 via the network interface 950. For example, the comfort controller could retrieve the

initial interface objects 600 from a web page on the Internet." *Id.* at 5:10-12. A web page on the Internet is an example of a remote correspondent. EX1002, ¶154. The "initial interface objects 600 can be downloaded as files" and then "presented on the display unit 200" to allow the user to choose a preferred language. EX1007 at 5:14-16. "Once the preferred language is chosen, the proper user interface objects 400 are then downloaded." *Id.* at 5:16-17. Additionally, a user "can choose to download updated or additional control algorithms 500 via the network interface 950." *Id.* at 5:30-31. Based on *Smith's* disclosure that "[t]he different control algorithms might be … loaded over the Internet or other network after installation," (*Id.* at 2:3-5; *see also id.* at 2:17-19), a POSITA would have understood that one source for the control algorithms is a web page on the Internet. EX1002, ¶154.

The initial interface objects and user interface objects downloaded from the Internet in *Smith* disclose or at least render obvious the claimed "functional programming" in element 1[i]. *Id.*, ¶155. For example, *Smith* describes that the initial interface objects 600, downloaded as files, are "presented on the display unit 200 and request the user to choose a preferred language." EX1007 at 5:15-16; *see also id.* at Abstract. Additionally, "[o]nce the preferred language is chosen, the proper user interface objects 400 are then downloaded" and displayed. *Id.* at 5:16-17; *see also id.* at Abstract. Thus, *Smith's* initial interface objects and user interface

objects define the user interface displayed by *Smith's* thermostat system and can be changed so that, for example, a user's preferred language is used. EX1002, ¶155. The initial interface objects and user interface objects in *Smith* are analogous to examples of "functional programming" provided in the '075 Patent, including "one or more entire graphical user interfaces as represented on a touchscreen," "portions of a graphical user interface," and "representations of the size, shape, colors, locations and other viewable aspects of text or graphic devices on the touchscreen." EX1001 at 10:34-47; EX1002, ¶155.

Smith's control algorithms downloaded from the Internet also disclose or at least render obvious the claimed "functional programming" recited in element 1[i]. EX1002, ¶156. *Smith* describes that "as is well known, thermostats often have setback capabilities which involves a programmed temperature schedule." EX1007 at 1:12-19 (describing heating and cooling according to a schedule). "A schedule of set back temperatures is one example of a control algorithm that can be used by the comfort controller." *Id.* at 1:20-21. *Smith* explains that "such control algorithms will be different for different climates" and "vary based on personal preferences." *Id.* at 20-23. In *Smith*, control algorithms may be "loaded" from the Internet (e.g., downloaded) "so that the user can choose from one that is suited for the user's climate and personal preferences." *Id.* at 2:17-19. *Smith's* control algorithms are analogous to examples of "functional programming" in the '075

Patent, including "operational algorithms for the control program other than those for the graphical user interface," "operational algorithms for control of existing or newly installed space conditioning equipment," and "operational algorithms for communications with existing or newly installed environmental sensors." EX1001 at 10:34-37, 10:48-54; EX1002, ¶156.

Thus, *Smith* discloses a remote correspondent (e.g., "a web page on the Internet" (EX1007 at 5:11-12)) that is "a source of functional programming" (e.g., initial interface objects, user interface objects, and control algorithms). EX1002, ¶157. When *Smith's* teachings are applied to *Rosen*, the remote correspondent of *Rosen* is a source of functional programming (e.g., initial interface objects, user interface objects, and control algorithms) as taught by *Smith*. *Id.* Thus, *Rosen* in combination with *Smith* discloses element 1[i]. *Id.*

Petitioner provides an explanation of the rationale and motivation for combining *Smith* with *Rosen* (as modified by *Rosen-II*) in Section IX.A.1.xi.(a) below.

vii. Element 1[j]

Rosen in combination with *Rosen-II* discloses or at least renders obvious element 1[j]. EX1002, ¶¶158-160. For many years prior art thermostats had some type of control program. *Id.*, ¶¶158, 83-86; EX1012 at 274:24-275:7. As discussed above, *Rosen* discloses a memory for storing program and data

information. *Supra*, §IX.A.1.iv; EX1002, ¶¶158, 145-146. *Rosen's* thermostat system includes "a program stored in the memory" (i.e., a control program) that "causes the CPU to selectively" perform certain operations (e.g., "establish communications with the remote correspondent"). EX1005, ¶0007. In the combined system, *Rosen* is modified to include the touch screen of *Rosen-II*, as discussed above. *Supra*, §IX.A.1.iii; EX1002, ¶158.

With respect to operation of its touch screen, *Rosen-II* discloses that "[a] program stored in the memory directs the central processing unit to communicate through the input/output unit to selectively: establish on the liquid crystal display a representation of at least one button at a predetermined XY position." EX1006, ¶0007; *see also id.* at Claim 1. This corresponds to the first step of Figure 14 of *Rosen-II*:

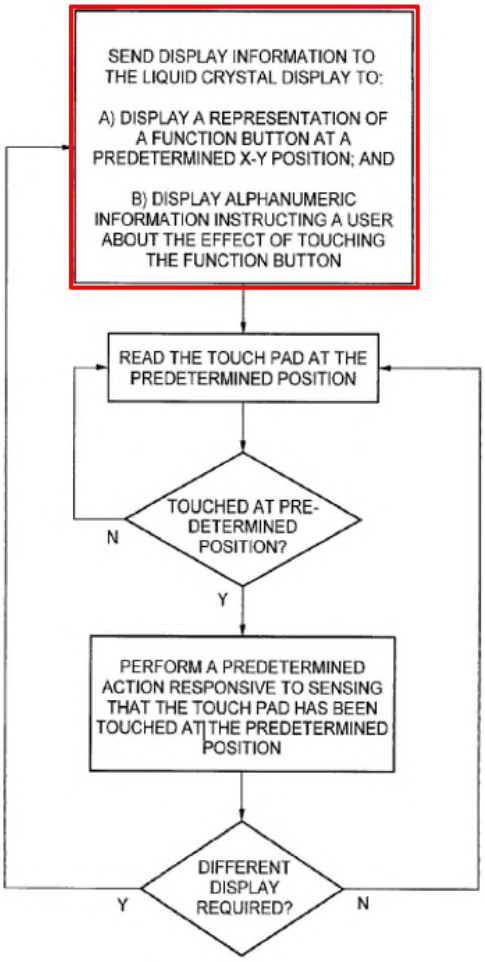

FIG. 14

Id. at Figure 14 (annotated); EX1002, ¶159.

Rosen-II explains that "[d]ifferent menus can place the buttons and messages in various positions on the touch screen to facilitate intuitive programming." EX1006, ¶0007. In addition to disclosing that the one or more representations of buttons are established at predetermined positions, *Rosen-II* discloses establishing the representations of buttons at "separated" positions. EX1002, ¶160. For example, each of Figures 3-5 of *Rosen-II* depicts representations of buttons at

"separated" positions:

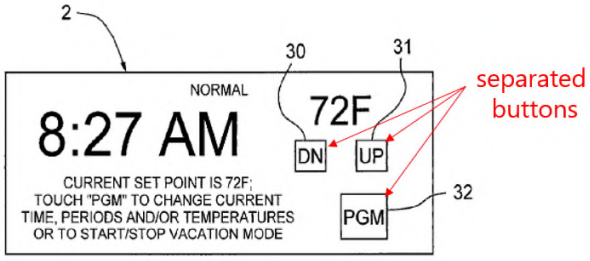

FIG. 3

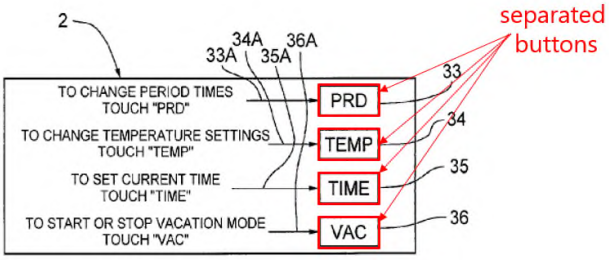

FIG. 4

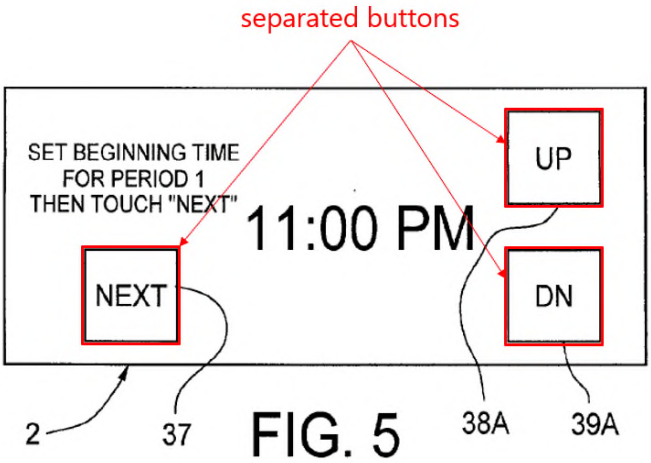

FIG. 5

EX1006 at Figures 3-5 (annotated); *see also* EX1002, ¶160; EX1006, ¶0028 (describing "representations of buttons 30, 31, and 32" in Figure 3), ¶0030 (describing "four choice buttons" 33, 34, 35, and 36 in Figure 4); ¶0032 (describing "buttons" 37, 38A, and 39A in Figure 5). Accordingly, *Rosen* in combination with *Rosen-II* discloses element 1[j]. EX1002, ¶160. The rationale and motivation for combining *Rosen* and *Rosen-II* is the same as discussed for element 1[b]. *Supra*, §IX.A.1.iii.(a); EX1002, ¶¶160, 134-144.

viii. Element 1[k]

Rosen in combination with *Rosen-II* discloses or at least renders obvious element 1[k]. EX1002, ¶¶161-162. In the combined system, *Rosen* is modified to include the touch screen of *Rosen-II*. *Supra*, §IX.A.1.iii. With respect to operation of its touch screen, *Rosen-II* discloses that "[a] program stored in the memory directs the central processing unit to communicate through the input/output unit to selectively: … read the same XY position on the touch pad to determine if the 'button' has been touched[.]" EX1006, ¶0007; *see also id.* at Claim 1 ("read the position on the touch pad juxtaposed with said first predetermined position on the liquid crystal display to determine if the representation of said at least one button has been touched"), Abstract, ¶0028. This corresponds to the second and third steps of Figure 14 of *Rosen-II*:

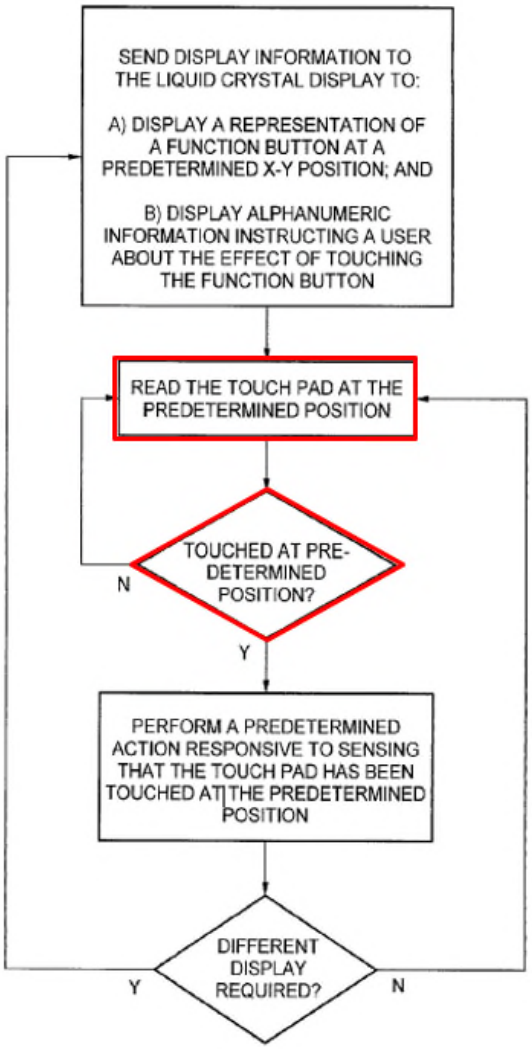

FIG. 14

Id. at Figure 14 (annotated); EX1002, ¶162. Thus, *Rosen* in combination with *Rosen-II* discloses element 1[k]. EX1002, ¶162. The rationale and motivation for combining *Rosen* and *Rosen-II* is the same as discussed for element 1[b]. *Supra*, §IX.A.1.iii.(a); EX1002, ¶¶162, 134-144.

ix. Element 1[l]

Rosen in combination with *Rosen-II* discloses or at least renders obvious element 1[l]. EX1002, ¶¶163-165. In the combined system, *Rosen* is modified to include the touch screen of *Rosen-II*. *Supra*, §IX.A.1.iii. With respect to operation of its touch screen, *Rosen-II* discloses that "[a] program stored in the memory directs the central processing unit to communicate through the input/output unit to selectively: … if the button has been touched, perform a predetermined action such as moving to a different menu or changing operating criteria." EX1006, ¶0007.

In particular, *Rosen-II* discloses "chang[ing] to a different menu or establish[ing] a condition incorporated into the thermostat system operation" if a button has been touched. *Id.* at Abstract; *see also id.*, Claim 1, Claim 3 (in response to a button being touched, "processing this information to establish a condition incorporated into the operation of said thermostat system"), Claim 17, Claim 18. This corresponds to the fourth step in Figure 14 of *Rosen-II*:

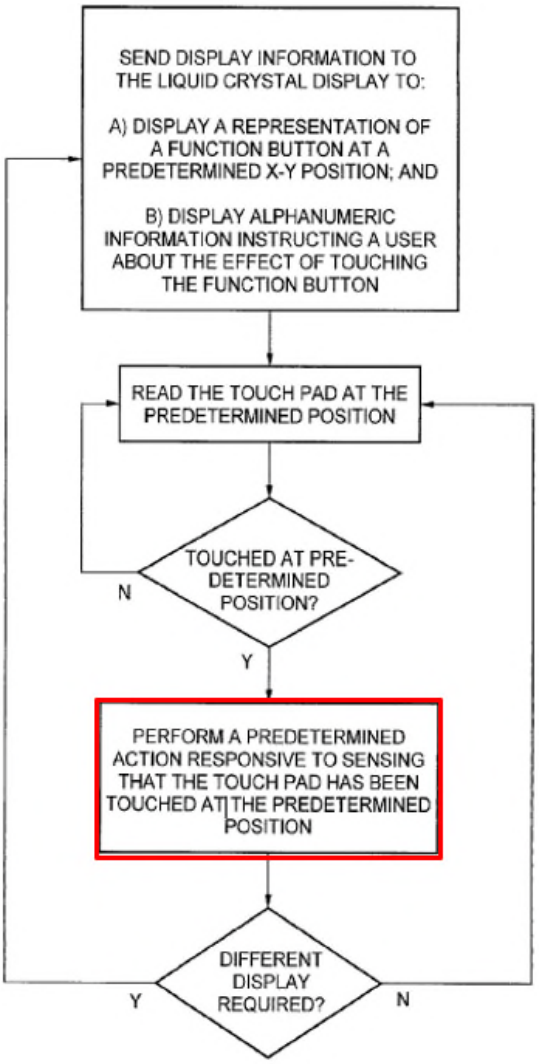

FIG. 14

Id. at Figure 14 (annotated); EX1002, ¶164.

For example, if the button 30, labeled "DN" in Figure 3 of *Rosen-II* is touched, "that fact is sensed by the processor which drops the current set point from, say, 72° F. to 71° F. The set point can similarly be raised by touching the button 31 which is labeled 'UP'." EX1006, ¶0028; *see also id.*, ¶¶0032 (touching the "'RUN' button 42 … returns the thermostat system to normal operation"), 0033. Increasing

and decreasing temperature set points, or returning the thermostat system to normal operation, in response to sensing that a button has been touched are examples of processing "information to establish a condition incorporated into the operation of said thermostat system" as claimed. EX1002, ¶165. Thus, *Rosen* in combination with *Rosen-II* discloses element 1[l]. *Id.* The rationale and motivation for combining *Rosen* and *Rosen-II* is the same as discussed for element 1[b]. *Supra*, §IX.A.1.iii.(a); EX1002, ¶¶165, 134-144.

x. Element 1[m]

Rosen in combination with *Smith* discloses or at least renders obvious element 1[m]. EX1002, ¶¶166-172. As discussed for element 1[i], *Rosen's* "communications interface is adapted to establish bi-directional communications (via the Internet or some other suitable facility) between the processor and a remote correspondent." EX1005, ¶0007; *Supra*, §IX.A.1.vi. In particular, "a program stored in the memory causes the CPU to selectively: establish communications with the remote correspondent[.]" EX1005, ¶0007; *see also id.* at ¶0022, Claims 1, 11. "The remote correspondent 15 has a known data communications 'address'" and can be "accessed by, for example, using the Internet." *Id.*, ¶0022.

Rosen discloses establishing communications between the processor and a remote correspondent to obtain current information. *Supra*, §IX.A.1.vi. *Rosen*, however, does not explicitly disclose establishing communications between the

processor and the remote correspondent "from which is transferred to said memory one or more modules of functional programming" as recited in element 1[m]. *Smith* discloses this aspect of element 1[m]. EX1002, ¶167.

Smith's comfort controller (e.g., thermostat system) has a memory that "can store at least one control algorithm and at least one user interface object." EX1007 at 2:8-11; *see also id.* at 3:8-17. Figure 1 of *Smith* depicts initial interface object(s) 600, user interface object(s) 400, and control algorithm(s) 500 stored in memory 300:

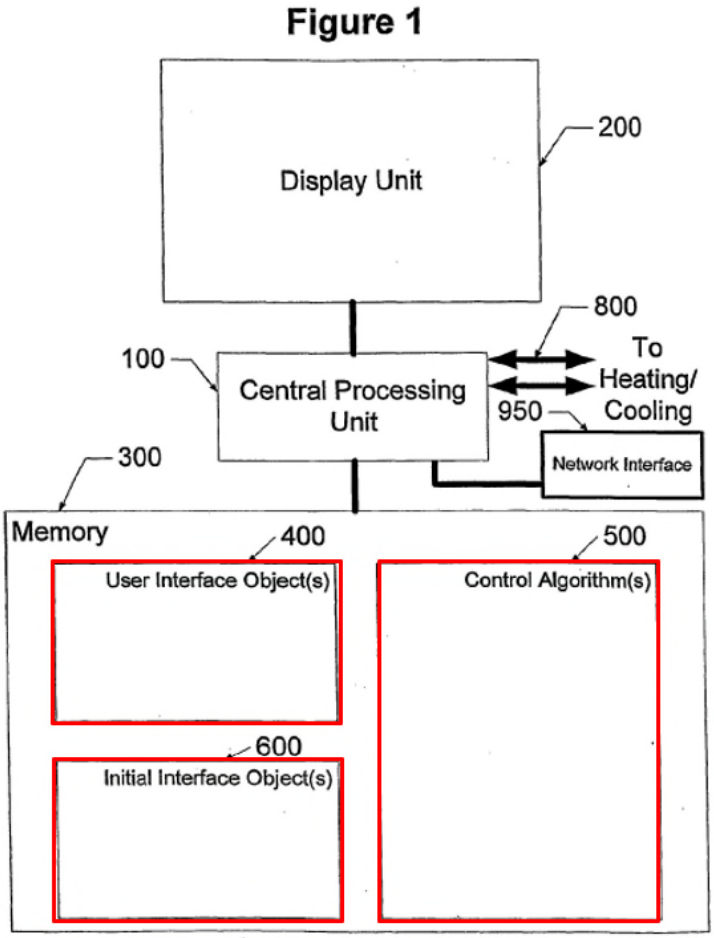

Id. at Figure 1 (annotated); EX1002, ¶168.

As discussed above for element 1[i], *Smith's* initial interface objects, user interface objects, and control algorithms disclose or at least render obvious the claimed "functional programming." *Supra*, §IX.A.1.vi. Based on *Smith's* disclosure that the initial interface objects, user interface objects, and control algorithms are software "downloaded as files" from the Internet and "loaded into the memory" (EX1007 at 5:10-16, Abstract), a POSITA would have understood that *Smith's* initial interface objects, user interface objects, and control algorithms disclose or at least render obvious the claimed "modules of functional programming" in element 1[m]. EX1002, ¶169.

Smith describes a process by which the functional programming modules (e.g., initial interface objects, user interface objects, and control algorithms) are transferred from a remote correspondent (e.g., a web page on the Internet) to memory. *Id.*, ¶170. The comfort controller of *Smith* may be "installed without any user interface objects, initial interface objects, or control algorithms stored in memory." EX1007 at 5:8-9. "When first powered-up after installation, the comfort controller is programmed to load the initial interface objects 600 via the network interface 950" (e.g., by "retriev[ing] the initial interface objects 600 from a web page on the Internet"). *Id.* at 5:10-12. The "initial interface objects 600 can be downloaded as files" and then "presented on the display unit 200" to allow the user to choose a preferred language. *Id.* at 5:14-16. "Once the preferred language

is chosen, the proper user interface objects 400 are then downloaded." *Id.* at 5:16-17. Additionally, a user "can choose to download updated or additional control algorithms 500 via the network interface 950." *Id.* at 5:30-31; *see also id.* at 2:3-5 ("different control algorithms might be … loaded over the Internet or other network after installation").

A POSITA would have understood that the process described in *Smith* involves transferring *Smith's* modules of functional programming (e.g., initial interface objects, user interface objects, and control algorithms) to memory in a thermostat system. EX1002, ¶171. The initial interface objects, user interface objects, and control algorithms are stored/loaded in memory as shown in Figure 1 above. EX1007 at Figure 1; *see also* Abstract (describing storing and loading user interface objects and control algorithms into memory), 3:12-15 (describing storing initial/user interface objects and control algorithms in memory).

When *Smith's* teachings are applied to *Rosen*, the thermostat system in *Rosen* establishes communications between its processor and a remote correspondent (e.g., a web page on the Internet) from which modules of functional programming (e.g., *Smith's* initial interface objects, user interface objects, and control algorithms) are transferred into the memory of *Rosen's* thermostat system, as taught by *Smith*. EX1002, ¶172. Thus, *Rosen* in view of *Smith* discloses or at least renders obvious element 1[m]. *Id.*

Petitioner provides an explanation of the rationale and motivation for combining *Smith* with *Rosen* (as modified by *Rosen-II*) in Section IX.A.1.xi.(a) below.

xi. Element 1[n]

Rosen (as modified by *Rosen-II*) in combination with *Smith* discloses or at least renders obvious element 1[n]. EX1002, ¶¶173-178. *Smith* discloses using the initial interface objects, user interface objects, and control algorithms (each of which is an example of "transferred functional programming" as discussed for elements 1[i] and 1[m]) to change or add to representations on the touch screen. EX1002, ¶173.

Smith discloses that the comfort controller can be "installed without any user interface objects, initial interface objects, or control algorithms stored in memory." EX1007 at 5:8-9. With respect to the initial interface objects, *Smith* discloses that "[w]hen first powered-up after installation, the comfort controller is programmed to load the initial interface objects 600 via the network interface 950" (e.g., by retrieving them "from a web page on the Internet"). *Id.* at 5:10-12. The "initial interface objects 600 can be downloaded as files" and are "presented on the display unit 200 and request the user to choose a preferred language." *Id.* at 5:14-16. *Smith's* initial interface objects "change or add to representations on the touch screen" as claimed, because their display adds an option for the user to choose a

preferred language. EX1002, ¶173. This change or addition of representation on the touch screen (e.g., the ability to choose a preferred language) was not available to the control program before its transfer to memory, because prior to downloading the initial interface objects, the comfort controller was installed "without any" initial interface objects. *Id.*; EX1007 at 5:8-9.

With respect to the user interface objects, "[o]nce the preferred language is chosen, the proper user interface objects 400 are then downloaded." EX1007 at 5:16-17. *Smith's* downloaded user interface objects "change or add to representations on the touch screen." EX1002, ¶174. *Smith* discloses that, "[o]nce a preferred language is chosen, the display unit uses user interface objects 400 in the memory to correctly display all of the textual information in the preferred language" (e.g., by redisplaying controls, display information, and labels in the chosen language). EX1007 at 5:2-6. This change or addition of representation on the touch screen (e.g., the display of textual information in the preferred language) was not available to the control program before its transfer to memory, because prior to downloading the proper user interface objects, the comfort controller was installed "without any" user interface objects. EX1002, ¶174.

With respect to the control algorithms, *Smith* discloses that "[c]ontrol algorithms may also be loaded [from the Internet] so that the user can choose from one that is suited for the user's climate and personal preferences." EX1007 at 2:17-

19; *see also id.* at Abstract. *Smith's* control algorithms "change or add to representations on the touch screen" as recited in element 1[n]. EX1002, ¶175. For instance, one example of a control algorithm in *Smith* is "a set-point schedule" that the thermostat controller uses to set-up or set-back the temperature according to the schedule. EX1007 at 4:7-12. *Smith's* display unit 200 displays a "graphical representation of the set-point temperature schedule," as shown by element 920 in Figure 2 of *Smith* below:

Figure 2

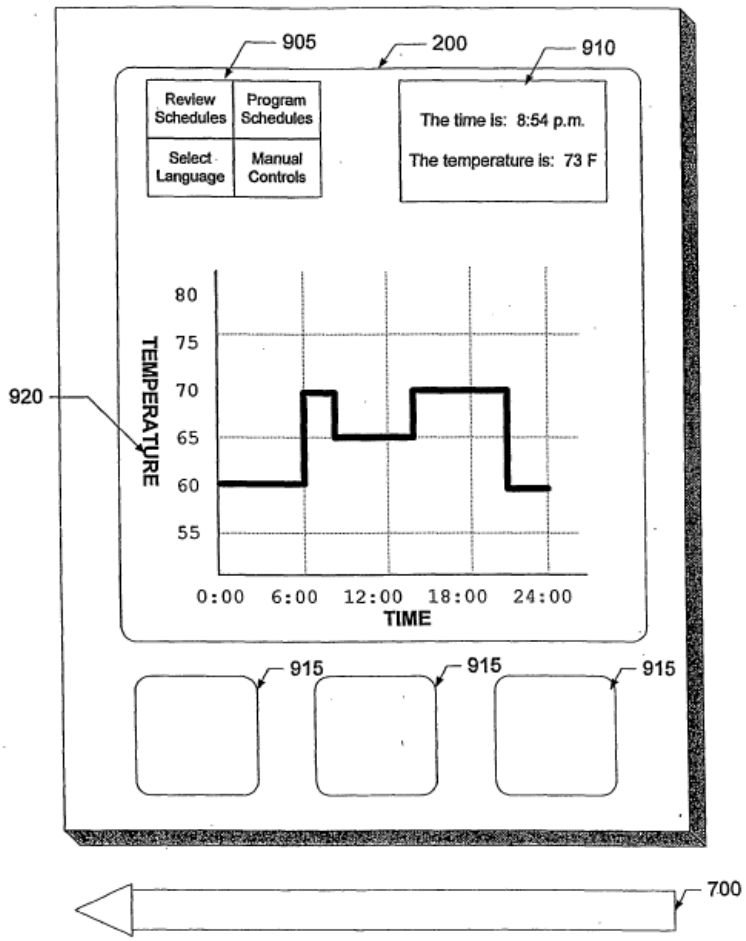

Id. at Figure 2, 4:13-20. A user "can choose to download updated or additional

control algorithms 500 via the network interface 950." *Id.* at 5:30-31. A POSITA would have understood from *Smith's* disclosure that when a different control algorithm (e.g., a set-point schedule) is chosen by the user, the graphical representation of the set-point temperature schedule on the display would be changed to reflect the new schedule. EX1002, ¶176. Additionally, based on *Smith's* disclosure that its comfort controller (e.g., thermostat system) may be installed "without any" control algorithms stored in memory (EX1007 at 5:8-9) and the user can "download updated or additional control algorithms" (*Id.* at 5:30-31), a POSITA would have understood that the "changes or additions of representation on the touch screen were not available to the control program before their transfer to memory." EX1002, ¶176.

When *Smith's* teachings are applied to *Rosen*, the control program in *Rosen* operates the transferred functional programming (e.g., the initial interface objects, user interface objects, and control algorithms taught by *Smith*) to change or add to representations on the touch screen of *Rosen* (as modified by *Rosen-II*) (e.g., by providing an option to choose a preferred language, changing the language displayed to the preferred language, or updating the set-point schedule according to a new control algorithm), where the changes or additions of representation on the touch screen were not available to the control program before their transfer to the memory. EX1002, ¶177.

Smith's initial interface objects, user interface objects, and control algorithms disclose or at least render obvious the claimed functional programming. *Id.*, ¶178. To the extent Patent Owner argues otherwise, the claims would nevertheless still have been obvious to a POSITA. *Id.* It was well known in the prior art that software updates for Internet-connected devices/appliances can be obtained over the Internet and used to expand, update, or change software functionality. *Id.*, ¶¶178, 94-102. A POSITA would have understood from the combined teachings of *Rosen*, *Rosen-II*, and *Smith* that the techniques described therein could be used to transfer and operate a wide variety of software updates, including of the type described as functional programming in the '075 Patent. *Id.*, ¶178. Using the techniques disclosed by the *Rosen-Rosen-II-Smith* combination to transfer and operate different types of software to expand, update, or change functionality would have been obvious to a POSITA as nothing more than the application of a known technique. *Id.*

(a) Rationale and motivation for combining *Rosen* with *Smith*.

It would have been obvious to a POSITA to modify *Rosen's* thermostat system (as modified in view of *Rosen-II*) to incorporate *Smith's* functionality for transferring functional programming (e.g., initial interface objects, user interface objects, and control algorithms) from a remote correspondent that is a source of functional programming (e.g., a website on the Internet) to a thermostat system and

operating the transferred functional programming to change or add to representations on the touch screen and/or control space conditioning equipment. EX1002, ¶¶179-183. Doing so would have involved applying a known technique (e.g., *Smith's* approach to transferring and operating functional programming in a thermostat system) to a known device (e.g., *Rosen's* thermostat system) ready for improvement to yield predictable results. *Id.*, ¶179.

Smith is analogous art to the '075 Patent, *Rosen*, and *Rosen-II*, because each is in the same field of endeavor: thermostat systems. *Id.*, ¶180; EX1007 at 1:6-7; EX1005, ¶0001; EX1006, ¶0001; EX1001 at 1:12-13.

A POSITA would have been motivated to combine *Smith* with *Rosen* (as modified by *Rosen-II*) to provide flexibility to accommodate user preferences and facilitate customizing the user interface of the programmable thermostat system of *Rosen*. EX1002, ¶181. *Smith* explains that "[p]rogrammable comfort controllers [e.g., thermostat systems] have been troublesome in the past because users often do not understand how to correctly program the controllers." EX1007 at 1:24-25. For example, "[f]or people whose first language is not English, or for people travelling to a foreign country and staying in a hotel or other housing, programming comfort controllers can be even more difficult because the buttons, controls, and displays on the controllers are usually labeled with English words." *Id.* at 1:25-28. Additionally, *Smith* explains that control algorithms (e.g., "[a] schedule of set back

temperatures") "will be different for different climates" and "vary based on personal preferences." *Id.* at 1:20-23. Thus, *Smith* states that:

> What is needed in the art is a user interface for a thermostat in which the temperature schedule is more easily programmed. To make the programming easier, users should be able to choose a preferred language and then view the switches, etc. on the comfort controller in the chosen preferred language. In addition, to make programming and using the controllers easier, different control algorithms should be available to the user to choose from. The different control algorithms might be programmed during manufacturing, or loaded over the Internet or other network after installation.

Id. at 1:29-2:5. Downloading user interface objects for a user's preferred language, as discussed for elements 1[i], 1[m], and 1[n], enables the "controls, labels, etc." of the thermostat system to be presented to the user on the display "in the user's preferred language." *Id.* at 2:12-18; *Supra*, §§IX.A.1.vi, IX.A.1.x-xi. According to *Smith*, "[t]his makes the comfort controller easier to use by someone for whom English is not his or her first language." EX1007 at 5:6-7. Additionally, loading control algorithms from the Internet enables the user to choose "one that is suited for the user's climate and personal preferences." EX1007 at 2:17-19.

Based on *Smith's* teachings, a POSITA would have been motivated to modify the thermostat system of *Rosen* (as modified by *Rosen-II*) to obtain functional programming modules (e.g., initial interface objects, user interface objects, and/or

control algorithms) from its remote correspondent (e.g., a web page on the Internet) and operate the obtained functional programming to add to or change representations on the touch screen of *Rosen* (as modified by *Rosen-II*), as taught by *Smith*. EX1002, ¶182. Additionally, a POSITA would have recognized the benefits of being able to expand, update, or change software functionality over time (e.g., by downloading new control algorithms for controlling space conditioning equipment. *Id.*, ¶183.

A POSITA in the art would have had a reasonable expectation of success in making the combination. EX1002, ¶¶184-186. First, a POSITA would have recognized that *Rosen* (as modified by *Rosen-II*) is an example of the type of system in which *Smith's* teachings could be applied. *Id.*, ¶184. *Rosen* relates to a programmable thermostat that operates under control of a processor (EX1005, ¶0006) and *Smith* describes improvements to user interfaces for thermostat systems such that "the temperature schedule is more easily programmed." EX1007 at 1:29-2:5.

Second, a POSITA would have understood that *Rosen* (as modified by *Rosen-II*) already includes the hardware and software needed to implement *Smith's* teachings. EX1002, ¶185. *Smith* describes implementing its invention with a thermostat system having "a central processing unit, a memory, a display with a touch-sensitive screen used for input," and "a network interface" (that can "include a modem") used to download initial interface objects, user interface objects, and

control algorithms "from a web page on the Internet." EX1007 at 2:7-11, 5:8-17. *Rosen* (as modified by *Rosen-II*) similarly includes a central processing unit, a memory for storing program and data information, a touch screen for interface with a user, and a communications interface adapted to establish communications with a remote correspondent (e.g., a web page on the Internet) as discussed for elements 1[b], 1[c], 1[e], and 1[i]. *Supra*, §§IX.A.1.iii-iv, IX.A.1.vi. Based on *Smith's* teaching that its interface objects and control algorithms can be obtained from the Internet, a POSITA would have understood that the remote correspondent in *Rosen* (which *Rosen* describes is "routinely accessed by, for example, using the Internet (EX1005, ¶0022)) would be suitable to use as a source of functional programming for *Rosen's* thermostat system, consistent with *Smith's* teachings. EX1002, ¶185.

It would have been well within the skill set of a POSITA to modify *Rosen's* control program to obtain functional programming and operate the functional programming to change and/or add to representations on the touch screen of *Rosen's* thermostat system, as taught by *Smith*. *Id.*, ¶186. Doing so would have involved routine programming of the control program logic of *Rosen* (as modified by *Rosen-II*) using the techniques described by *Smith*. *Id.*

xii. Element 1[o]

Rosen discloses element 1[o]. *Id.*, ¶¶187-190. This claim element is governed by 35 U.S.C. § 112, ¶6. *Supra*, §VII.A. Under Patent Owner's

interpretation, the function is "coupling said communications interface and said first remote correspondent," and the corresponding structure is a serial link and/or data link and any equivalents. *Supra*, §VII.A; EX1009 at 5; EX1026 at 76-77.

Rosen's thermostat system includes "means coupling said communications interface and said first remote correspondent." EX1005 at Claim 1. *Rosen's* I/O unit "includes a communications interface 14 for coordinating communications between the CPU 9 and a remote correspondent 15. The communications interface 14 may be, for example, a conventional serial port." *Id.*, ¶0018. Additionally, *Rosen's* CPU "issu[es] signals to the I/O unit 10 to cause the communications interface 14 to establish communications, via link 16, with a remote correspondent 15." *Id.*, ¶0022. Thus, *Rosen* discloses the function of "coupling said communications interface and said first remote correspondent." EX1002, ¶188.

Rosen also discloses the corresponding structure, namely a serial link and/or data link. EX1002, ¶¶189-190. Similar to the '075 Patent, *Rosen's* Figure 2 shows "a typical coupling in which the communications interface 14 sends/receives serial data to/from an external (to the thermostat system) modem 20 via serial link 16." EX1005, ¶0032. "The modem conventionally interfaces with an Internet Service Provider (ISP) 21 which completes the communications link to the remote correspondent in the well-known manner." *Id.* Figure 2 of *Rosen* shows the corresponding structure disclosed in the '075 Patent:

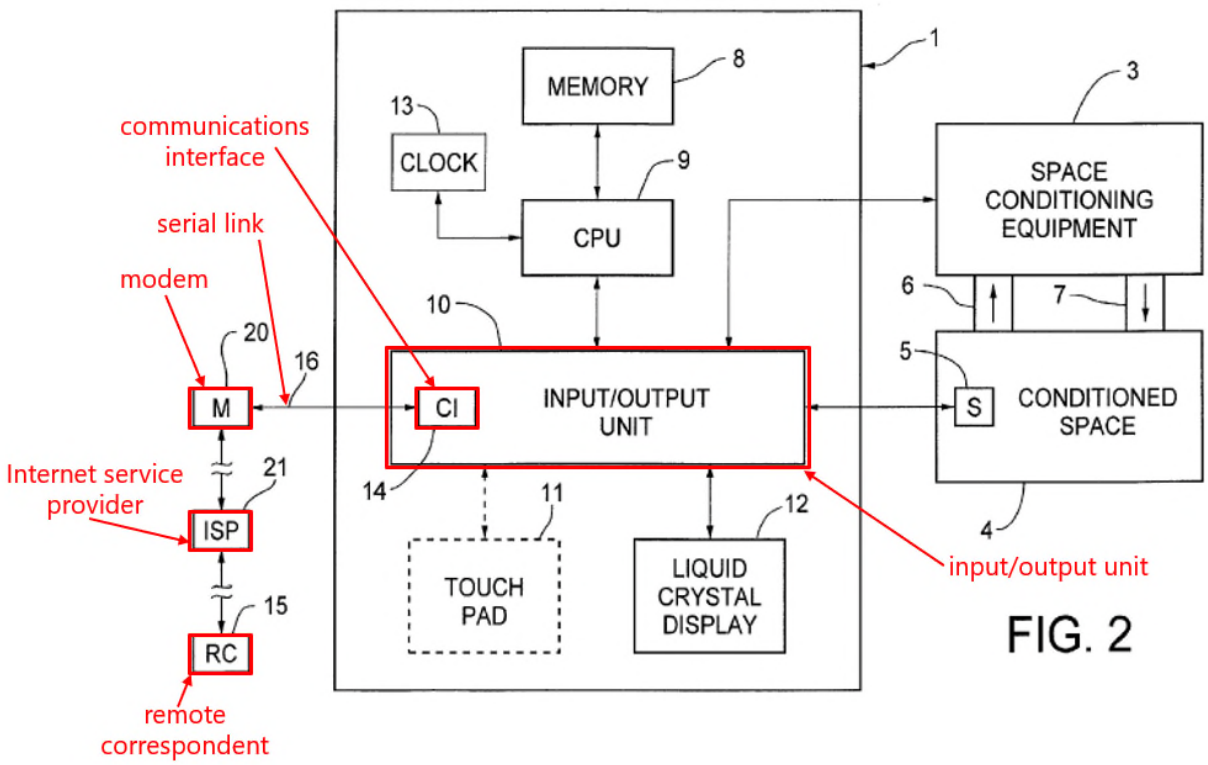

FIG. 2

Id. at Figure 2 (annotated); EX1002, ¶189.

Additionally, *Rosen* discloses that "a modem 24 for communicating with the ISP may be integrated into the communications interface 14 of the input/output unit 14 to eliminate the need for an external modem." EX1005, ¶0033. "Thus, when communications is established with the remote correspondent 15 … the data transfer takes place via modem 24 and data link 26 as shown." *Id.* Figure 3 of *Rosen* shows the corresponding structure disclosed in the '075 Patent:

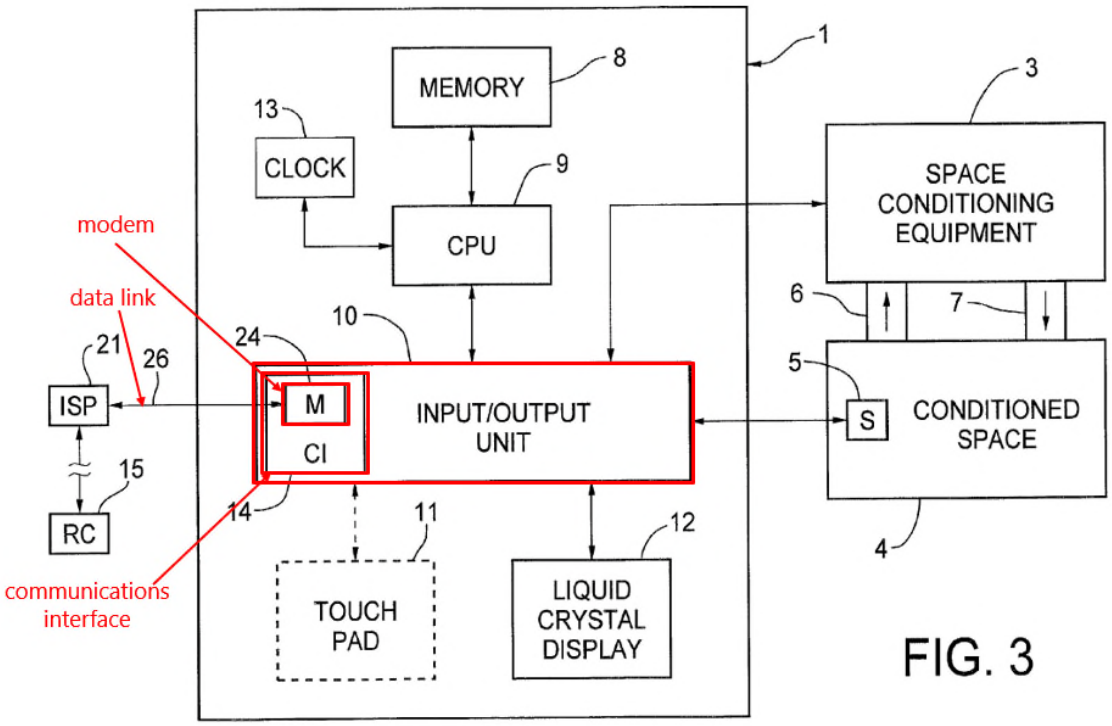

Id. at Figure 3 (annotated). Thus, *Rosen* discloses element 1[o]. EX1002, ¶190.

2. Claim 2

Rosen discloses Claim 2. *Id.*, ¶191. Modems were well known in the prior art, and the inventor of the ’075 Patent concedes that he did not invent any new type of modem. *Id.*; EX1012 at 267:19-25. *Rosen* discloses that the communication interface of its thermostat system can include a modem. EX1002, ¶191. As discussed for element 1[o], *Rosen* discloses that “a modem 24 for communicating with the ISP may be integrated into the communications interface 14 of the input/output unit 14 to eliminate the need for an external modem.” EX1005, ¶0033; *Supra*, §IX.A.1.xii. Figure 3 of *Rosen* discloses a communication interface including a modem:

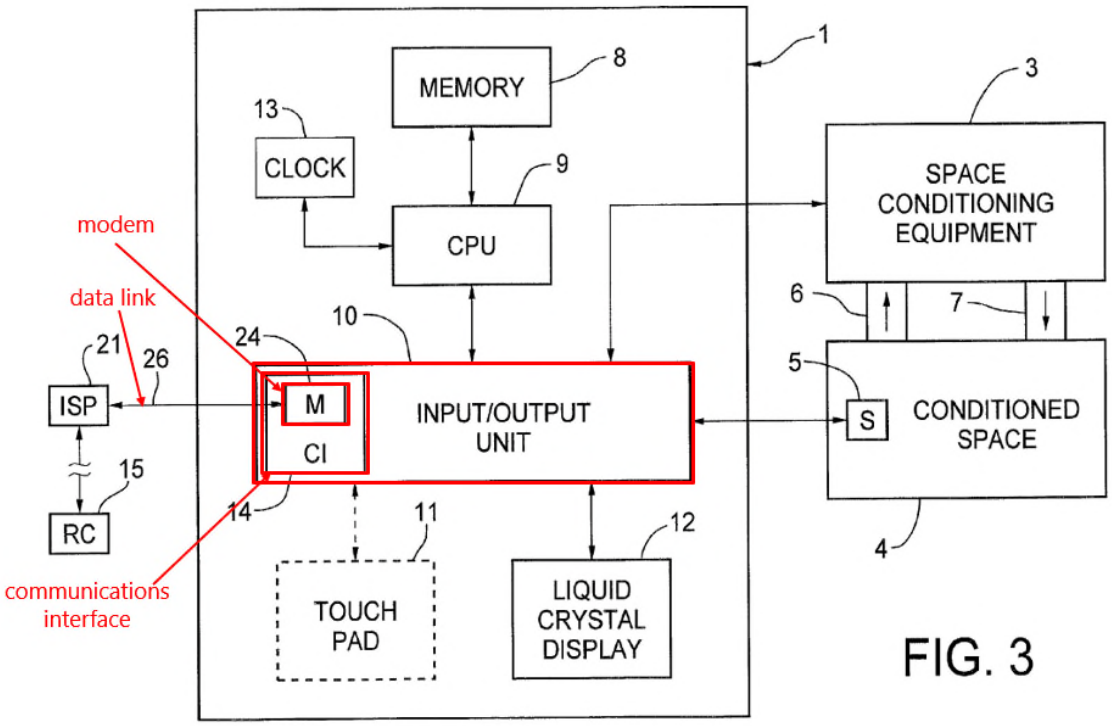

EX1005 at Figure 3 (annotated). Thus, *Rosen* discloses Claim 2. EX1002, ¶191.

3. Claim 3

Rosen discloses Claim 3. *Id.*, ¶192. *Rosen* discloses that the communication interface of its thermostat system may be coupled to an external modem. *Id.* As discussed for element 1[o], *Rosen's* Figure 2 shows "a typical coupling in which the communications interface 14 sends/receives serial data to/from an external (to the thermostat system) modem 20 via serial link 16." EX1005, ¶0032. Figure 2 of *Rosen* shows coupling of the communications interface to an external modem:

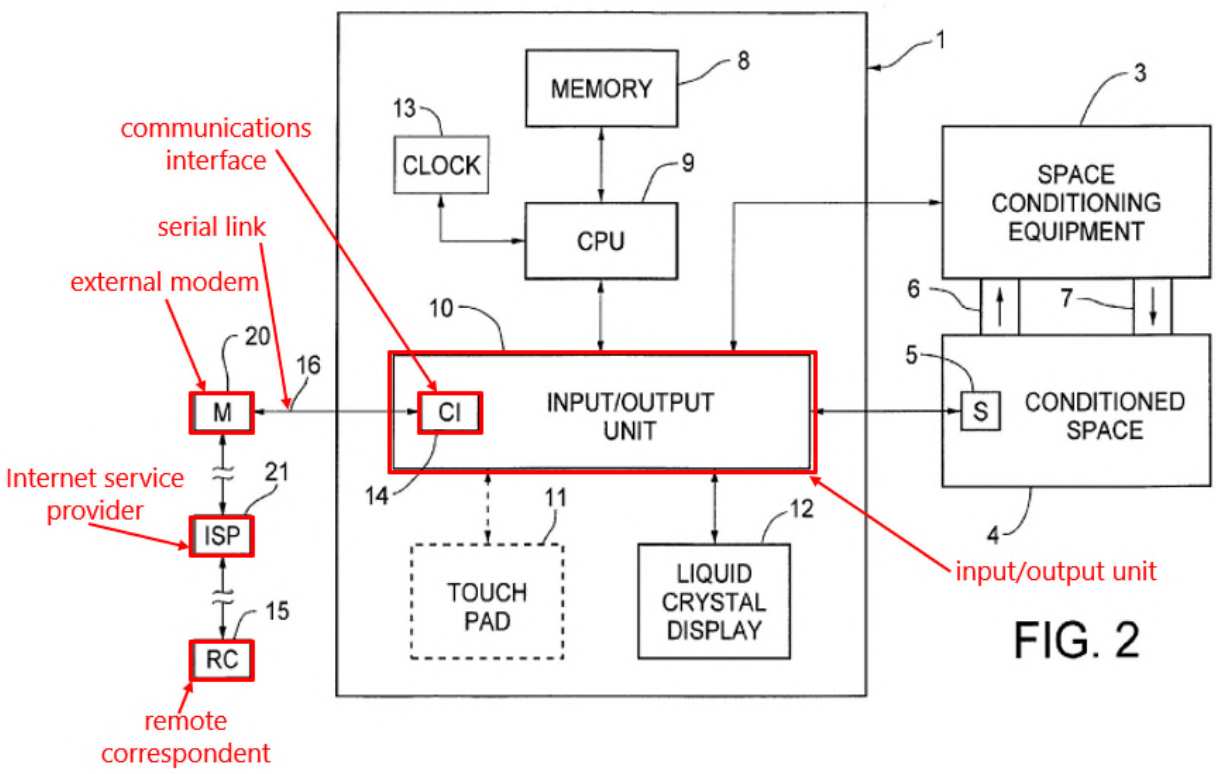

FIG. 2

EX1005 at Figure 2 (annotated). Thus, *Rosen* discloses Claim 3. EX1002, ¶192.

4. Claim 4

The *Rosen-Rosen-II-Smith* combination renders obvious Claim 4. *Id.*, ¶¶193-197. As discussed above, this claim element is governed by 35 U.S.C. § 112, ¶6. *Supra*, §VII.A. Under Patent Owner's interpretation, the function is "controlling space conditioning equipment," and the corresponding structure is virtual buttons operating with control programs. *Supra*, §VII.A; EX1009 at 5-6; EX1026 at 80.

As discussed for elements 1[i], 1[m] and 1[n], *Smith's* initial interface objects, user interface objects, and control algorithms disclose or at least render obvious the

claimed modules of functional programming. *Supra*, §§IX.A.1.vi, IX.A.1.x-xi. *Smith's* functional programming changes or adds to representations on the touch screen for example by adding an option for the user to choose a preferred language (initial interface objects), changing the language of the display buttons (user interface objects), or changing the display to reflect a new set-point schedule (control algorithms). EX1007 at 5:2-6, 5:14-16, 5:30-31. When *Smith's* teachings are applied to *Rosen* (as modified by *Rosen-II*), the transferred functional programming comprises virtual buttons for controlling space conditioning equipment (i.e., means for controlling space conditioning equipment). EX1002, ¶194.

At a minimum, *Smith's* initial interface objects and user interface objects enable a user to "choose a preferred language and then view the switches, etc. on the comfort controller in the chosen preferred language." EX1007 at 1:30-2:2. Based on *Smith's* disclosure that a user "view[s] the switches, etc." in the chosen preferred language, a POSITA would have understood that the user interface objects are used to change the language used for buttons on a touchscreen, for example the "additional controls 905" in *Smith's* Figure 2:

Figure 2

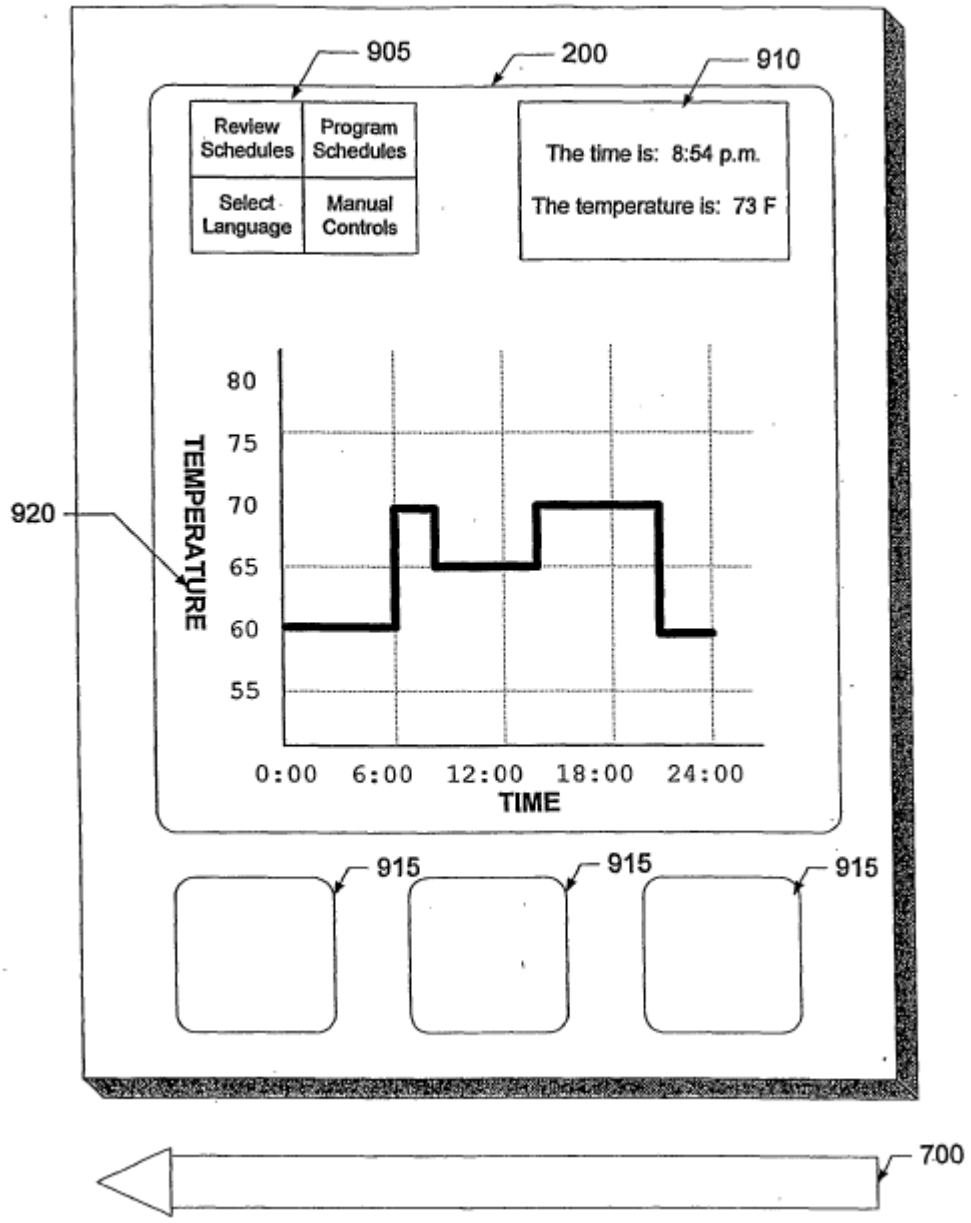

Id. at Figure 2; *see also id.* at 5:4-6 ("[I]f a language other than English was chosen, the additional controls 905, the display information 910, and the labels 920 would be redisplayed in the chosen language."); EX1002, ¶195.

When *Smith's* teachings are applied to *Rosen* (as modified by *Rosen-II*), the user interface objects are used to change the language of the buttons on the thermostat systems touch screen to the preferred language. EX1002, ¶196. As discussed for element 1[j], *Rosen* (as modified by *Rosen-II*) discloses establishing "representations of buttons at a separated and predetermined positions" on a touch screen of the thermostat systems. *Supra*, §IX.A.1.vii. A POSITA would have understood the representations of buttons to be virtual buttons because they are "generated by the processor 1 at predetermined convenient and intuitive positions on the touch screen" (EX1006, ¶0028) as opposed to fixed, tactile buttons separate from the display. EX1002, ¶196. *Rosen-II* explains that these virtual buttons are used to control space conditioning equipment. *Id.* For example, *Rosen-II* describes, with respect to Figure 3 reproduced below, that "[i]f the button 30, labeled 'DN', is touched, that fact is sensed by the processor which drops the current set point from, say, 72° F. to 71° F. The set point can be similarly raised by touching the button 31 which is labeled 'UP'". EX1006, ¶0028.

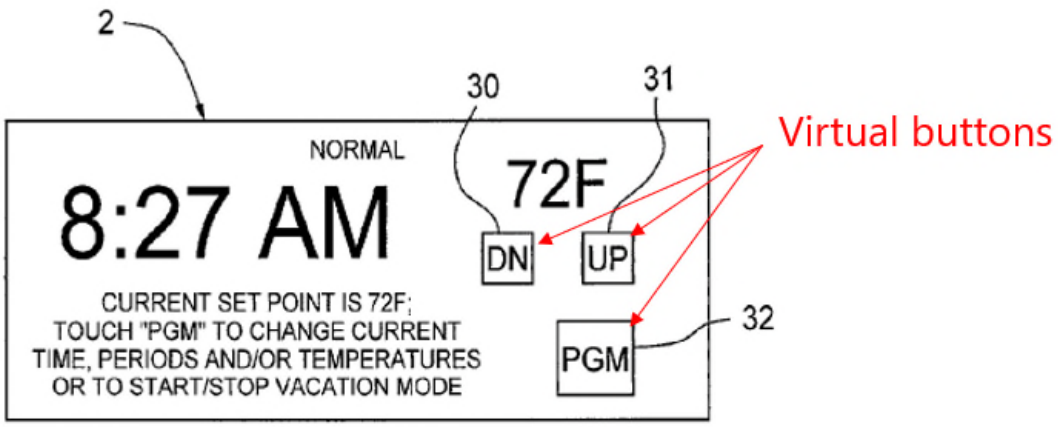

FIG. 3

Id. at Figure 3 (annotated). Additionally, with respect to Figure 3 above, *Rosen-II* describes that "[a] user is invited, if desired, to touch the 'PGM' button 32 to change the current time, time periods and/or temperatures or to start/stop vacation mode," and further explains that "[t]hese actions are exemplary only; for example, 'select heat/cool mode' and other such actions can be included as appropriate for a particular thermostat system." *Id.*, ¶0029.

Thus, the *Rosen-Rosen-II-Smith* combination renders obvious "in which transferred functional programming modules comprise means for controlling space conditioning equipment" as recited in Claim 4. EX1002, ¶197. The rationale and motivation for combining *Smith* with *Rosen* (as modified by *Rosen-II*) is the same as discussed above for Claim 1. *Supra*, §IX.A.1.xi.(a); EX1002, ¶¶179-186.

5. Claim 11

The *Rosen-Rosen-II-Smith* combination discloses Claim 11 for the reasons discussed above for elements 1[i], 1[m], and 1[n]. EX1002, ¶198; *Supra*, §§IX.A.1.vi, IX.A.1.x-xi. *Smith's* initial interface objects "are presented on the display" and "request the user to choose a preferred language." EX1007 at 5:15-16. *Smith's* user interface objects cause information to be displayed in a different language. *Id.* at 5:4-6. *Smith's* control algorithms also change the "graphical representation of the set-point temperature schedule." *Id.* at 4:16-18; EX1002, ¶198. Thus, a POSITA would have understood that the functional programming (e.g., *Smith's* initial interface objects, user interface objects, and control algorithms) "determines all or part of a graphical user interface" as in Claim 11. EX1002, ¶198.

6. Claim 12

The *Rosen-Rosen-II-Smith* combination discloses Claim 12 for the reasons discussed above for Claim 11. EX1002, ¶199; *Supra*, §IX.A.5. A POSITA would have understood that the various text associated with buttons are an example of a "legend" or, at a minimum, "other viewable aspects of said buttons on the display," because the text is displayed on or close to the button and viewable by a user. EX1002, ¶199. Because *Smith's* user interface objects define the language displayed, *Smith's* user interface objects (i.e., functional programming) "determine[]

… legends … or other viewable aspects of said buttons on the display" as in Claim 12. *Id.*, ¶199.

7. Claim 13

The *Rosen-Rosen-II-Smith* combination discloses Claim 13 for the reasons discussed above for Claims 11 and 12. *Supra*, §§IX.A.5-6; EX1002, ¶200. By enabling an option to choose a preferred language to be presented, redisplaying information in a preferred language, and changing the graphical representation of the set-point temperature schedule, *Smith's* initial interface objects, user interface objects, and control algorithms (i.e., functional programming), respectively, "determine[] representations of … other viewable aspects of text or graphic devices on the display" as in Claim 13. EX1002, ¶200.

8. Claim 14

The *Rosen-Rosen-II-Smith* combination discloses Claim 14. *Id.*, ¶¶201-203. At a minimum, *Smith's* control algorithms (i.e., functional programming) "determine[] operational algorithms other than those for the graphical user interface." *Id.*, ¶201.

For example, *Smith* describes that "[a]s is well known, thermostats often have setback capabilities which involves a programmed temperature schedule." EX1007 at 1:12-14; *see also* 1:14-18 (describing implementing a programmed temperature schedule to heat and cool a house). *Smith* explains that "[a] schedule

of set back temperatures is one example of a control algorithm that can be used by the comfort controller." *Id.* at 1:20-21. The "thermal controller sets-up or sets-back the temperature according to such a set-point schedule." *Id.* at 4:7-10; *see also id.* at 4:10-12 (describing an example set-point schedule). Based on *Smith's* disclosure that a thermal controller "sets-up or sets-back the temperature according to such a set-point schedule" in a control algorithm, a POSITA would have understood that *Smith's* control algorithms are operational algorithms for control of existing space conditioning equipment. EX1002, ¶¶202-203. In other words, *Smith's* control algorithms "determine[] operational algorithms other than those for the graphical user interface" as in Claim 14. *Id.*, ¶203.

9. Claim 15

The *Rosen-Rosen-II-Smith* combination discloses Claim 15 for the reasons discussed for Claim 14. *Id.*, ¶204; *Supra*, §IX.A.8. Based on *Smith's* disclosure that a thermal controller "sets-up or sets-back the temperature according to such a set-point schedule" in a control algorithm, a POSITA would have understood that *Smith's* control algorithms (i.e., functional programming) "determine[] operational algorithms for control of existing … space conditioning equipment" as in Claim 15. EX1002, ¶204.

X. SECONDARY CONSIDERATIONS

Petitioner is aware of no evidence of secondary considerations that would meaningfully rebut a finding of obviousness. *Id.*, ¶¶205-206. Petitioner reserves the right to rebut any purported objective evidence of non-obviousness raised by PO.

XI. INSTITUTION SHOULD BE GRANTED

A. Discretion Under 35 U.S.C. § 314(a)

The Board should not exercise its discretion under § 314(a) to deny this Petition. First, no other petitions have been filed against the '075 Patent. Accordingly, the *General Plastics* factors favor institution. *See Gen. Plastic Indus. Co. v. Canon Kabushiki Kaisha*, IPR2016-01357, Paper 19 at 15-16 (P.T.A.B. Sept. 6, 2017) (precedential).

Second, if the Board applies the analysis in *NHK Spring Co., Ltd. v. Intri-Plex Techs., Inc.*, IPR2018-00752, Paper 8 at 19-20 (P.T.A.B. Sept. 12, 2018) (precedential)[4] or *Apple Inc. v. Fintiv, Inc.*, IPR2020-00019, Paper 11 at 5-6 (P.T.A.B. Mar. 20, 2020) (precedential), those factors taken together support institution.

[4] Petitioner recognizes the Board must apply its precedential caselaw, but specifically reserves its objection to the Board's application of the *NHK-Fintiv* caselaw as non-justiciable under the APA.

Factor 1: Potential Stay

While Petitioner intends to move for a stay, the Board should "not attempt to predict how the district court in the related district court litigation will proceed[.]" *Sand Revolution II, LLC v. Cont'l Intermodal Group-Trucking LLC*, IPR2019-01393, Paper 24 at 7 (P.T.A.B. Jun. 16, 2020) (informative).

Factor 2: Trial Date

The related litigation is set for jury trial beginning June 3, 2024. EX1011 at 2. That is approximately three months before the projected September 2024 statutory deadline for the Board to enter a final written decision in this proceeding (if instituted). "[T]he decision whether to institute will likely implicate other factors … such as the resources that have been invested in the parallel proceeding." *Apple*, IPR2020-00019, Paper 11 at 9. As discussed below, the litigation is in its early stages.

Also, trial dates are uncertain. *See Halliburton Energy Servs., Inc. v. U.S. Well Servs., LLC*, IPR2021-01037, Paper 12 (P.T.A.B. Jan. 19, 2022); EX1028 at 2 (finding the PTAB had accurately "evaluat[ed] future trial dates" only six percent of the time); EX1029 (similar). Even if the trial is scheduled several months before the Board's final written decision, this factor would be "at most, neutral." *Micron Tech., Inc. v. Godo Kaisha IP Bridge 1*, IPR2020-01008, Paper 10 at 14 (P.T.A.B.

Dec. 7, 2020); *Google LLC v. Parus Holdings, Inc.*, IPR2020-00846, Paper 9 at 12-14 (P.T.A.B. Oct. 21, 2020).

If trial were to proceed as scheduled, this factor at most only "slightly favors" denying institution. *See Micron Tech., Inc. v. Vervain, LLC*, IPR2021-01550, Paper 11 at 10 (P.T.A.B. Apr. 11, 2022). In that case, however, it is outweighed by other factors here, including the relatively early stage of the case as discussed below. *See, e.g.*, *Microsoft Corp. v. WSOU Invs., LLC*, IPR2021-00930, Paper 8 at 6-13 (P.T.A.B. Dec. 2, 2021); *Facebook, Inc. v. USC IP P'ship, L.P.*, IPR2021-00033, Paper 13 at 12 (P.T.A.B. Apr. 30, 2021).

Factor 3: Investment in the parallel proceeding

Neither the parties nor the court have expended substantial effort in the parallel proceeding. Petitioner filed a motion to dismiss the complaint as to three of the five asserted patents under 35 U.S.C. § 101 on June 21, 2022. The motion was granted in part and denied in part on January 4, 2023. Patent Owner served its preliminary infringement contentions on October 20, 2022 and its amended infringement contentions on November 21, 2022. Petitioner served its invalidity contentions on December 15, 2022. The claim construction process has only just begun. Claim construction briefing will be completed by May 11, 2023, (EX1030 at 1) followed by a potential hearing. EX1026 at 100. The effort and resources expended to date are "typical of the early stages of litigation" and thus this factor

"does not favor exercising discretion to deny institution." *Apple Inc. v. Smart Mobile Techs. LLC*, IPR2022-00808, Paper 24 at 52 (P.T.A.B. Sept. 29, 2022).

Petitioner worked diligently to file this Petition. As noted above, Petitioner moved to dismiss on June 21, 2022. To conserve resources of the Board and the parties, it would have made no sense to file petitions for IPR prior to resolution of the motion to dismiss. This Petition, and four other petitions challenging different patents also asserted in the litigation, were filed just over two months after the district court denied the motion. Additionally, the Petition was filed within five months of receiving Patent Owner's original infringement contentions and less than two months after receiving Patent Owner's proposed claim constructions.

It would be premature to speculate as to "the amount and type of work" that will have been completed when the institution decision is made. *Google LLC*, IPR2020-00846, Paper 9 at 17-18. For example, the deadline to complete all discovery is November 20, 2023. EX1011 at 6. Summary judgment motions are due on December 21, 2023. *Id.* at 2. Thus, there will be "much work remain[ing] in the district court case as it relates to invalidity" when this proceeding is ready for institution. *Sand Revolution*, IPR2019-01393, Paper 24 at 11. Coupled with Petitioner's diligence in filing this Petition, this factor weighs against discretionary denial. *Cf. id.* at 10-11; *Google*, IPR2020-00846, Paper 9 at 18.

Factor 4: Issue Overlap

This Petition challenges each claim asserted in the litigation. EX1032 at 1. The Petition also challenges claims not asserted in the litigation (Claims 11-15). Petitioner served invalidity contentions in the parallel proceeding. Although *Rosen*, *Rosen-II*, and *Smith* are included, the parallel case is at an early stage. Any overlap at this point would be speculative. Thus, this factor fails to support discretionary denial.

Factor 5: Party Overlap

Petitioner and Patent Owner are parties in the litigation. Because it would require speculation to determine which tribunal will reach a final decision first, this factor is neutral. *Google*, IPR2020-00846, Paper 9 at 20-21.

Factor 6: Other Circumstances Favoring Institution

Additional circumstances favor institution. First, Petitioner acted with diligence, as noted above. Petitioner has gained no advantage from the parallel litigation, which favors institution. *See Oticon Med. AB v. Cochlear Ltd.*, IPR2019-00975, Paper 15 at 22-23 (P.T.A.B. Oct. 16, 2019) (precedential). The motion to dismiss had the potential to dispose of three of the five patents in the case and had that happened, the parties likely could have resolved the case. It was entirely reasonable for Petitioner to wait until the motion had been decided before undertaking the effort and expense of preparing the instant Petition.

Moreover, the merits favor institution as the compelling ground in this Petition demonstrates. "In such cases, the institution of a trial may serve the interest of overall system efficiency and integrity because it allows the proceeding to continue in the event that the parallel proceeding settles or fails to resolve the patentability question presented in the PTAB proceeding." *Google*, IPR2020-00846, Paper 9 at 21 (quoting *Fintiv*, IPR2020-00019, Paper 11 at 14-15). Ground 1 renders obvious every challenged claim. *Rosen* and *Rosen-II* disclose nearly every element of the challenged claims verbatim, and *Smith's* disclosure demonstrates that the remaining elements would have been obvious to a POSITA at the time of the alleged invention. Because the merits of Petitioner's challenge are compelling, this factor weighs against denying institution. *Fintiv*, IPR2020-00019, Paper 11 at 14-15; EX1031 at 4 (USPTO Guidance indicating that "compelling, meritorious challenges will be allowed to proceed at the PTAB even where the district court litigation is proceeding in parallel").

"Considering the *Fintiv* factors as part of a holistic analysis," it would undermine "the interests of the efficiency and integrity of the system" if the Board were "to deny institution of a potentially meritorious Petition." *Sand Revolution*, IPR2019-01393, Paper 24 at 14. The Board should institute this proceeding.

B. Discretion Under 35 U.S.C. § 325(d)

The Board should not exercise its discretion under 35 U.S.C. § 325(d). None of the references relied upon in Ground 1 were presented to the Office during prosecution. EX1001 at Cover. Thus, the Petition's sole ground was not considered by the Examiner during prosecution. Accordingly, the Board should decline to exercise its discretion under 35 U.S.C. § 325(d).

XII. CONCLUSION

Petitioner respectfully requests institution of IPR and that the Challenged Claims be cancelled as unpatentable pursuant to 35 U.S.C. § 318(b).

Respectfully Submitted,

March 29, 2023

/David G. Wille/
David G. Wille (Reg. No. 38,363)
BAKER BOTTS L.L.P.
2001 Ross Avenue, Suite 900
Dallas, TX 75201-2980
Tel: 214-953-6595
david.wille@bakerbotts.com

Attorneys for Petitioner, Lennox Industries Inc.

CERTIFICATE OF SERVICE

In accordance with 37 C.F.R. §§ 42.6(e) and 42.105, the undersigned certifies that on March 29, 2023, a complete and entire copy of the **PETITION FOR *INTER PARTES* REVIEW OF CLAIMS 1-4 AND 11-15 OF U.S. PATENT NO. 7,232,075** including exhibits and testimony relied upon and a power of attorney were served on Patent Owner via FedEx overnight at the correspondence address of record for the subject patent and counsel for Patent Owner in the NDTX Litigation, as included below:

Marc Hankin
Hankin Patent Law, APC
12400 Wilshire Boulevard, Suite 1265
Los Angeles, CA 90025

Hao Ni
NI, WANG & MASSAND, PLLC
8140 Walnut Hill Ln., Ste. 500
Dallas, TX 75231

Date: March 29, 2023

/David G. Wille/
David G. Wille (Reg. No. 38,363)
BAKER BOTTS L.L.P.
2001 Ross Avenue, Suite 900
Dallas, TX 75201-2980
Tel: 214-953-6595
david.wille@bakerbotts.com

Attorneys for Petitioner, Lennox Industries Inc.

CERTIFICATION UNDER 37 C.F.R. § 42.24(d)

Pursuant to 37 C.F.R. § 42.24(d), the undersigned hereby certifies that the word count under § 42.24(a)(1) for the foregoing Petition for *Inter Partes* Review totals 13,962 words, within the 14,000 word limit allowed under § 42.24(a)(1)(i).

Date: March 29, 2023

/David G. Wille/
David G. Wille (Reg. No. 38,363)
BAKER BOTTS L.L.P.
2001 Ross Avenue, Suite 900
Dallas, TX 75201-2980
Tel: 214-953-6595
david.wille@bakerbotts.com

Attorneys for Petitioner, Lennox Industries Inc.