WILEY

WCDMA FOR UMTS

Radio Access For Third Generation Mobile Communications

Revised Edition

REVISED AND UPDATED Spring 2001

Edited by Harri Holma and Antti Toskala

WCDMA FOR UMTS

Radio Access For Third Generation Mobile Communications

Revised edition

Edited by
Harri Holma and Antti Toskala
Both of Nokia, Finland

JOHN WILEY & SONS, LTD
Chichester • New York • Weinheim • Brisbane • Singapore • Toronto

Copyright © 2001 by John Wiley & Sons, Ltd,
Baffins Lane, Chichester,
West Sussex, PO19 1UD, England

National 01243 779777
International (+44) 1243 779777

e-mail (for orders and customer service enquiries): cs-books@wiley.co.uk

Visit our Home Page on http://www.wiley.co.uk or http://www.wiley.com

All Rights Reserved. No part of this publication may be reproduced, stored in a retrieval system, or transmitted, in any form or by any means, electronic, mechanical, photocopying, recording, scanning or otherwise, except under the terms of the Copyright Designs and Patents Act 1988 or under the terms of a licence issued by the Copyright Licensing Agency, 90 Tottenham Court Road, London, W1P 9HE, UK, without the permission in writing of the Publisher, with the exception of any material supplied specifically for the purpose of being entered and executed on a computer system, for exclusive use by the purchaser of the publication.

Neither the author(s) nor John Wiley & sons Ltd accept any responsibility or liability for loss or damage occasioned to any person or property through using the material, instructions, methods or ideas contained herein, or acting or refraining from acting as a result of such use. The author(s) and Publisher expressly disclaim all implied warranties, including merchantability of fitness for any particular purpose. There will be no duty on the author(s) or Publisher to correct any errors or defects in the software.

Designations used by companies to distinguish their products are often claimed as trademarks. In all instances where John Wiley & Sons is aware of a claim, the product names appear in initial capital or capital letters. Readers, however, should contact the appropriate companies for more complete information regarding trademarks and registration.

Other Wiley Editorial Offices

John Wiley & Sons, Inc., 605 Third Avenue,
New York, NY 10158-0012, USA

WILEY-VCH Verlag GmbH
Pappelallee 3, D-69469 Weinheim, Germany

John Wiley & Sons Australia, 33 Park Road, Milton,
Queensland 4064, Australia

John Wiley & Sons (Asia) Pte Ltd, 2 Clementi Loop #02-01,
Jin Xing Distripark, Singapore 129809

John Wiley & Sons (Canada) Ltd, 22 Worcester Road
Rexdale, Ontario, M9W 1L1, Canada

British Library Cataloguing in Publication Data

A catalogue record for this book is available from the British Library

ISBN 0 471 48687 6

Typeset by Laser Words, Madras, India
Printed and bound in Great Britain by Antony Rowe Ltd, Chippenham, Wiltshire.
This book is printed on acid-free paper responsibly manufactured from sustainable forestry,
in which at least two trees are planted for each one used for paper production.

4.5.3 *cdma2000*

The cdma2000 air interface proposal to ITU is the result of work in TR45.5 on the evolution of IS-95 towards the third generation. The cdma2000 proposal is based partly on IS-95 principles with respect to synchronous network operation, common pilot channels, and so on, but it is a wideband version with three times the bandwidth of IS-95. The ITU proposal contains further bandwidth options as well as the multi-carrier option for downlink. The cdma2000 proposal has a high degree of commonality with the Global CDMA 1 ITU proposal from TTA, Korea.

The cdma2000 multi-carrier option is covered in more detail in Chapter 13, as being currently standardised by 3GPP2.

4.5.4 *TR46.1*

The WIMS W-CDMA was not based on work derived from an existing second generation technology but was a new third generation technology proposal with no direct link to any second generation standardisation. It was based on the constant processing gain principle with a high number of multicodes in use, thus showing some fundamental differences but also a level of commonality with WCDMA technology in other forums.

4.5.5 *WP-CDMA*

WP-CDMA (Wideband Packet CDMA) resulted from the convergence between W-CDMA N/A of T1P1 and WIMS W-CDMA of TR46.1 in the US. The main features of the WIMS W-CDMA proposal were merged with the principles of W-CDMA N/A. The merged proposal was submitted to the ITU-R IMT-2000 process towards the end of 1998, and to the 3GPP process at the beginning of 1999. Its the most characteristic feature, compared with the other WCDMA-based proposals, was a common packet mode channel operation for the uplink direction, but there were also a few smaller differences.

4.6 Creation of 3GPP

As similar technologies were being standardised in several regions around the world, it became evident that achieving identical specifications to ensure equipment compatibility globally would be very difficult with work going on in parallel. Also, having to discuss similar issues in several places was naturally a waste of resources for the participating companies. Therefore initiatives were made to create a single forum for WCDMA standardisation for a common WCDMA specification.

The standardisation organisations involved in the creation of the 3rd Generation Partnership Project (3GPP) [9] were ARIB (Japan), ETSI (Europe), TTA (Korea), TTC (Japan) and T1P1 (USA) as shown in Figure 4.2. The partners agreed on joint efforts for the standardisation of UTRA, now standing for Universal Terrestrial Radio Access, as distinct from UTRA (UMTS Terrestrial Radio Access) from ETSI, also submitted to 3GPP. Companies such as manufacturers and operators are members of 3GPP through the respective standardisation organisation to which they belong.

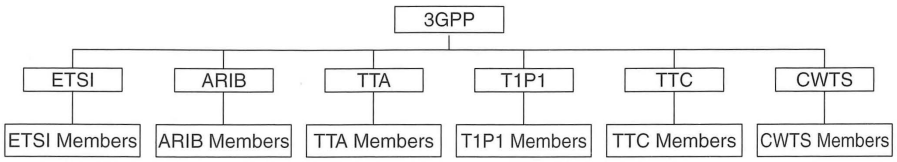

Figure 4.2. 3GPP organisational partners

Later during 1999, CWTS (the China Wireless Telecommunication Standard Group) also joined 3GPP and contributed technology from TD/SCDMA, a TDD-based CDMA third generation technology already submitted to ITU-R earlier.

3GPP also includes market representation partners: GSM Association, UMTS Forum, Global Mobile Suppliers Association, IPv6 Forum and Universal Wireless Communications Consortium (UWCC). In [9] there are up-to-date links to all participating organisations.

The work was initiated formally at the end of 1998 and the detailed technical work was started in early 1999, with the aim of having the first version of the common specification, called Release-99, ready by the end of 1999.

Within 3GPP, four different technical specification groups (TSG) were set up as follows:

- Radio Access Network TSG
- Core Network TSG
- Service and System Aspects TSG
- Terminals TSG

Within these groups the one most relevant to the WCDMA technology is the Radio Access Network TSG (RAN TSG), which has been divided into four different working groups as illustrated in Figure 4.3.

The RAN TSG will produce Release-99 of the UTRA air interface specification. The work done within the 3GPP RAN TSG working groups has been the basis of the technical description of the UTRA air interface covered in this book. Without such a global initiative, this book would have been forced to focus on a single regional specification, though with many similarities to those of other regions. Thus the references throughout this book are to the specification volumes from 3GPP.

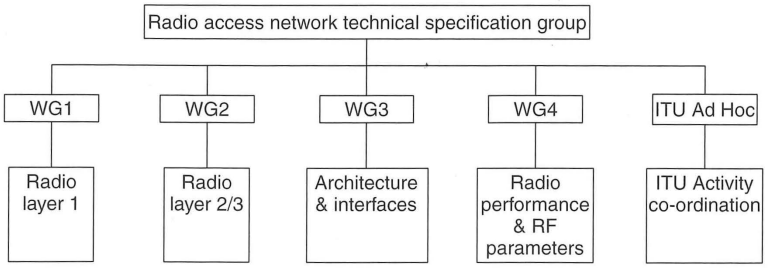

Figure 4.3. 3GPP RAN TSG working groups

During the first half of 1999 the inputs from the various participating organisations were merged in a single standard, leaving the rest of the year to finalise the detailed parameters for the first full release, Release-99, of UTRA from 3GPP. The member organisations have undertaken individually to produce standard publications based on the 3GPP specification. Thus, for example, the Release-99 UMTS specifications from ETSI are identical to the Release-99 specifications produced by 3GPP. The latest specifications can be obtained from 3GPP [9].

During 2000, further work on GSM evolution was moved from ETSI and other forums to 3GPP, including work on GPRS and EDGE. A new TSG, TSG GERAN was set up for this purpose.

4.7 Creation of 3GPP2

Work done in TR45.5 and TTA was merged to form 3GPP2, focused on the development of cdma2000 Direct-Sequence (DS) and Multi-Carrier (MC) mode for the cdma2000 third generation component. This activity has been running in parallel with the 3GPP project, with participation from ARIB, TTC and CWTS as member organisations. Recently the main concentration has been on the MC mode work, due to decisions resulting from the global harmonisation efforts.

4.8 Harmonisation Phase

During the spring of 1999 several operators and manufacturers held series of meetings to seek further harmonisation and convergence between the CDMA-based third generation solutions, WCDMA and cdma2000. For the 3GPP framework the ETSI, ARIB, TTA and T1P1 concepts had already been merged to a single specification, while cdma2000 was still on its own in TR45.5. As a result of several meetings and telephone conferences, the manufacturers and operators agreed to adopt a harmonised global third generation CDMA standard consisting of three modes: Multi-Carrier (MC), Direct Spread (DS) and Time Division Duplex (TDD). The MC mode was based on the cdma2000 multi-carrier option, the DS mode on WCDMA (UTRA FDD), and the TDD mode on UTRA TDD. The agreement was to phase in a modular approach in which both core networks could be used with all air interface alternatives, as described in Figure 1.4 in Chapter 1.

The main technical impacts of these harmonisation activities were the change of UTRA FDD and TDD mode chip rate from 4.096 Mcps to 3.84 Mcps and the inclusion of a common pilot for UTRA FDD. The work in 3GPP2 focused on the MC mode, and the DS mode from cdma2000 was abandoned. The result is that globally there is only one Direct Spread (DS) wideband CDMA standard, WCDMA.

4.9 IMT2000 Process in ITU

In the ITU, recommendations have been developed for third generation mobile communications systems, the ITU terminology being called IMT-2000 [10], formerly FPLMTS. In the ITU-R, ITU-R TG8/1 has worked on the radio-dependent aspects, while the radio-independent aspects have been covered in ITU-T SG11.

roc. IEEE Int. Conf. on
Helsinki, Finland, 1–4

AMES Multiple Access
, April 1998, pp. 16–24.
Multiple Access Mode
onf. on Personal Indoor
1–4 September 1997,

AMES Multiple Access
door and Mobile Radio
, pp. 42–46.
s for the UMTS Terres-
S 21.01 version 3.0.1,

edures for the Choice of
rt, UMTS 30.03 version

errestrial Radio Access
TS 30.06 version 3.0.0,

adio Interface for Third

ations Approved in ITU

5

Radio Access Network Architecture

Fabio Longoni and Atte Länsisalmi

5.1 System Architecture

This chapter gives a wide overview of the UMTS system architecture, including an introduction to the logical network elements and the interfaces. The UMTS system utilises the same well-known architecture that has been used by all main second generation systems and even by some first generation systems. The reference list contains the related 3GPP specifications.

The UMTS system consists of a number of logical network elements that each has a defined functionality. In the standards, network elements are defined at the logical level, but this quite often results in a similar physical implementation, especially since there are a number of open interfaces (for an interface to be 'open', the requirement is that it has been defined to such a detailed level that the equipment at the endpoints can be from two different manufacturers). The network elements can be grouped based on similar functionality, or based on which sub-network they belong to.

Functionally the network elements are grouped into the Radio Access Network (RAN, UMTS Terrestrial RAN = UTRAN) that handles all radio-related functionality, and the Core Network, which is responsible for switching and routing calls and data connections to external networks. To complete the system, the User Equipment (UE) that interfaces with the user and the radio interface is defined. The high-level system architecture is shown in Figure 5.1.

From a specification and standardisation point of view, both UE and UTRAN consist of completely new protocols, the design of which is based on the needs of the new WCDMA radio technology. On the contrary, the definition of CN is adopted from GSM. This gives the system with new radio technology a global base of known and rugged CN technology that accelerates and facilitates its introduction, and enables such competitive advantages as global roaming.

WCDMA for UMTS, edited by Harri Holma and Antti Toskala
© 2001 John Wiley & Sons, Ltd

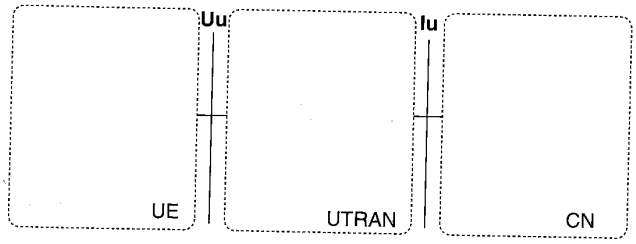

Figure 5.1. UMTS high-level system architecture

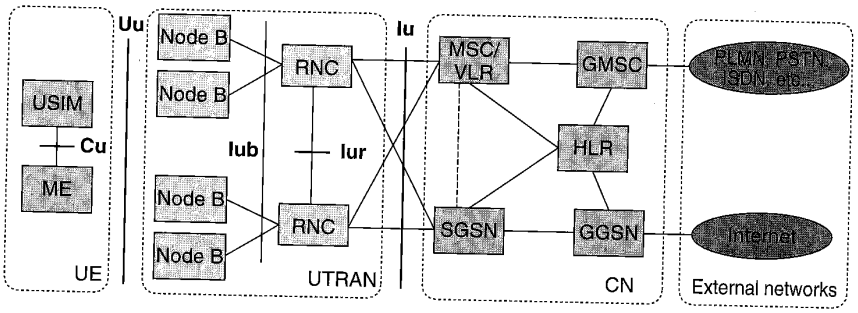

Figure 5.2. Network elements in a PLMN

Another way to group UMTS network elements is to divide them into sub-networks. The UMTS system is modular in the sense that it is possible to have several network elements of the same type. In principle, the minimum requirement for a fully featured and operational network is to have at least one logical network element of each type (note that some features and consequently some network elements are optional). The possibility of having several entities of the same type allows the division of the UMTS system into sub-networks that are operational either on their own or together with other sub-networks, and that are distinguished from each other with unique identities. Such a sub-network is called a UMTS PLMN (Public Land Mobile Network). Typically one PLMN is operated by a single operator, and is connected to other PLMNs as well as to other types of networks, such as ISDN, PSTN, the Internet, and so on. Figure 5.2 shows elements in a PLMN and, in order to illustrate the connections, also external networks.

The UTRAN architecture is presented in Section 5.2. A short introduction to all the elements is given below.

The UE consists of two parts:

- The Mobile Equipment (ME) is the radio terminal used for radio communication over the Uu interface.
- The UMTS Subscriber Identity Module (USIM) is a smartcard that holds the subscriber identity, performs authentication algorithms, and stores authentication and encryption keys and some subscription information that is needed at the terminal.

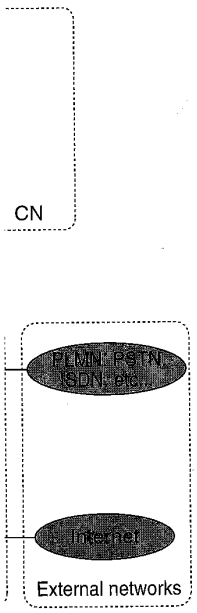

:m into sub-networks.
have several network
ɔr a fully featured and
ɔf each type (note that
al). The possibility of
MTS system into sub-
her sub-networks, and
ub-network is called a
is operated by a single
; of networks, such as
a PLMN and, in order

ntroduction to all the

o communication over

at holds the subscriber
ication and encryption
ninal.

UTRAN also consists of two distinct elements:

- The Node B converts the data flow between the Iub and Uu interfaces. It also participates in radio resource management. (*Note that the term 'Node B' from the corresponding 3GPP specifications is used throughout Chapter 5. The more generic term 'Base Station' used elsewhere in this book means exactly the same thing.*)
- The Radio Network Controller (RNC) owns and controls the radio resources in its domain (the Node Bs connected to it). RNC is the service access point for all services UTRAN provides the CN, for example management of connections to the UE.

The main elements of the GSM CN (there are other entities not shown in Figure 5.2, such as those used to provide IN services) are as follows:

- HLR (Home Location Register) is a database located in the user's home system that stores the master copy of the user's service profile. The service profile consists of, for example, information on allowed services, forbidden roaming areas, and Supplementary Service information such as status of call forwarding and the call forwarding number. It is created when a new user subscribes to the system, and remains stored as long as the subscription is active. For the purpose of routing incoming transactions to the UE (e.g. calls or short messages), the HLR also stores the UE location on the level of MSC/VLR and/or SGSN, i.e. on the level of serving system.
- MSC/VLR (Mobile Services Switching Centre/Visitor Location Register) is the switch (MSC) and database (VLR) that serves the UE in its current location for Circuit Switched (CS) services. The MSC function is used to switch the CS transactions, and the VLR function holds a copy of the visiting user's service profile, as well as more precise information on the UE's location within the serving system. The part of the network that is accessed via the MSC/VLR is often referred to as the CS domain.
- GMSC (Gateway MSC) is the switch at the point where UMTS PLMN is connected to external CS networks. All incoming and outgoing CS connections go through GMSC.
- SGSN (Serving GPRS (General Packet Radio Service) Support Node) functionality is similar to that of MSC/VLR but is typically used for Packet Switched (PS) services. The part of the network that is accessed via the SGSN is often referred to as the PS domain.
- GGSN (Gateway GPRS Support Node) functionality is close to that of GMSC but is in relation to PS services.

The external networks can be divided into two groups:

- CS networks. These provide circuit-switched connections, like the existing telephony service. ISDN and PSTN are examples of CS networks.
- PS networks. These provide connections for packet data services. The Internet is one example of a PS network.

The UMTS standards are structured so that internal functionality of the network elements is not specified in detail. Instead, the interfaces between the logical network elements have been defined. The following main open interfaces are specified:

- Cu Interface. This is the electrical interface between the USIM smartcard and the ME. The interface follows a standard format for smartcards.
- Uu Interface. This is the WCDMA radio interface, which is the subject of the main part of this book. The Uu is the interface through which the UE accesses the fixed part of the system, and is therefore probably the most important open interface in UMTS. There are likely to be many more UE manufacturers than manufacturers of fixed network elements.
- Iu Interface. This connects UTRAN to the CN and is introduced in detail in Section 5.4. Similarly to the corresponding interfaces in GSM, A (Circuit Switched) and Gb (Packet Switched), the open Iu interface gives UMTS operators the possibility of acquiring UTRAN and CN from different manufacturers. The enabled competition in this area has been one of the success factors of GSM.
- Iur Interface. The open Iur interface allows soft handover between RNCs from different manufacturers, and therefore complements the open Iu interface. Iur is described in more detail in Section 5.5.1.
- Iub Interface. The Iub connects a Node B and an RNC. UMTS is the first commercial mobile telephony system where the Controller-Base Station interface is standardised as a fully open interface. Like the other open interfaces, open Iub is expected to further motivate competition between manufacturers in this area. It is likely that new manufacturers concentrating exclusively on Node Bs will enter the market.

5.2 UTRAN Architecture

UTRAN architecture is highlighted in Figure 5.3.

UTRAN consists of one or more Radio Network Sub-systems (RNS). An RNS is a sub-network within UTRAN and consists of one Radio Network Controller (RNC) and one or more Node Bs. RNCs may be connected to each other via an Iur interface. RNCs and Node Bs are connected with an Iub Interface.

Before entering into a brief description of the UTRAN network elements (in this section) and a more extensive description of UTRAN interfaces (in the following sections), we present the main characteristics of UTRAN that have also been the main requirements for

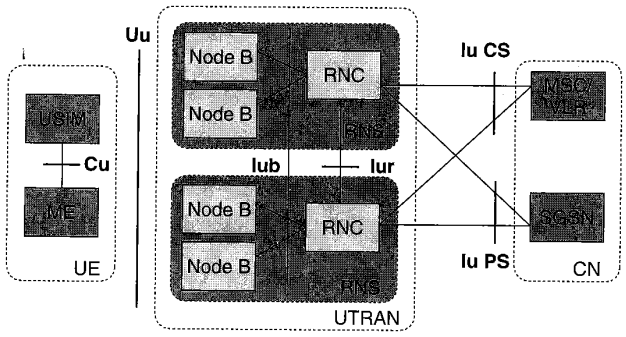

Figure 5.3. UTRAN architecture

martcard and the ME.

ıbject of the main part
es the fixed part of the
:e in UMTS. There are
xed network elements.

ı detail in Section 5.4.
tched) and Gb (Packet
ɔssibility of acquiring
ɔetition in this area has

ı RNCs from different
ır is described in more

.s the first commercial
ıce is standardised as a
pected to further moti-
ıat new manufacturers

ɴS). An RNS is a sub-
ller (RNC) and one or
rface. RNCs and Node

:ments (in this section)
ıllowing sections), we
main requirements for

the design of the UTRAN architecture, functions and protocols. These can be summarised in the following points:

- *Support of UTRA* and all the related functionality. In particular, the major impact on the design of UTRAN has been the requirement to support *soft handover* (one terminal connected to the network via two or more active cells) and the WCDMA-specific *Radio Resource Management* algorithms.
- Maximisation of the *commonalities in the handling of packet- switched and circuit-switched data*, with a unique air interface protocol stack and with the use of the same interface for the connection from UTRAN to both the PS and CS domains of the core network.
- Maximisation of the *commonalities with GSM*, when possible.
- Use of the *ATM transport* as the main transport mechanism in UTRAN.

5.2.1 The Radio Network Controller

The RNC (Radio Network Controller) is the network element responsible for the control of the radio resources of UTRAN. It interfaces the CN (normally to one MSC and one SGSN) and also terminates the RRC (Radio Resource Control) protocol that defines the messages and procedures between the mobile and UTRAN. It logically corresponds to the GSM BSC.

5.2.1.1 Logical Role of the RNC

The RNC controlling one Node B (i.e. terminating the Iub interface towards the Node B) is indicated as the *Controlling RNC* (CRNC) of the Node B. The Controlling RNC is responsible for the load and congestion control of its own cells, and also executes the admission control and code allocation for new radio links to be established in those cells.

In case one mobile–UTRAN connection uses resources from more than one RNS (see Figure 5.4), the RNCs involved have two separate logical roles (*with respect to this mobile–UTRAN connection*):

- *Serving RNC*. The SRNC for one mobile is the RNC that terminates both the Iu link for the transport of user data and the corresponding RANAP signalling to/from the

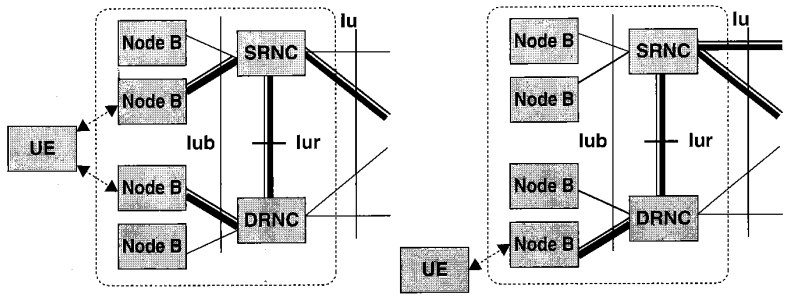

Figure 5.4. Logical role of the RNC for one UE UTRAN connection. The left-hand scenario shows one UE in inter-RNC soft handover (combining is performed in the SRNC). The right-hand scenario represents one UE using resources from one Node B only, controlled by the DRNC

core network (this connection is referred to as the RANAP connection). The SRNC also terminates the Radio Resource Control Signalling, that is the signalling protocol between the UE and UTRAN. It performs the L2 processing of the data to/from the radio interface. Basic Radio Resource Management operations, such as the mapping of Radio Access Bearer parameters into air interface transport channel parameters, the handover decision, and outer loop power control, are executed in the SRNC. The SRNC may also (but not always) be the CRNC of some Node B used by the mobile for connection with UTRAN. One UE connected to UTRAN has one and only one SRNC.

- *Drift RNC*. The DRNC is any RNC, other than the SRNC, that controls cells used by the mobile. If needed, the DRNC may perform macrodiversity combining and splitting. The DRNC does not perform L2 processing of the user plane data, but routes the data transparently between the Iub and Iur interfaces, except when the UE is using a common or shared transport channel. One UE may have zero, one or more DRNCs.

Note that one physical RNC normally contains all the CRNC, SRNC and DRNC functionality.

5.2.2 The Node B (Base Station)

The main function of the Node B is to perform the air interface L1 processing (channel coding and interleaving, rate adaptation, spreading, etc.). It also performs some basic Radio Resource Management operation as the inner loop power control. It logically corresponds to the GSM Base Station. The enigmatic term 'Node B' was initially adopted as a temporary term during the standardisation process, but then never changed.

The logical model of the Node B is described in Section 5.5.2.

5.3 General Protocol Model for UTRAN Terrestrial Interfaces

5.3.1 General

Protocol structures in UTRAN terrestrial interfaces are designed according to the same general protocol model. This model is shown in Figure 5.5. The structure is based on the principle that the layers and planes are logically independent of each other, and if needed, parts of the protocol structure may be changed in the future while other parts remain intact.

5.3.2 Horizontal Layers

The protocol structure consists of two main layers, the Radio Network Layer and the Transport Network Layer. All UTRAN-related issues are visible only in the Radio Network Layer, and the Transport Network Layer represents standard transport technology that is selected to be used for UTRAN but without any UTRAN-specific changes.

5.3.3 Vertical Planes

5.3.3.1 Control Plane

The Control Plane is used for all UMTS-specific control signalling. It includes the Application Protocol (i.e. RANAP in Iu, RNSAP in Iur and NBAP in Iub), and the Signalling Bearer for transporting the Application Protocol messages.

›nnection). The SRNC
the signalling protocol
ɜ data to/from the radio
, the mapping of Radio
rameters, the handover
ɔ. The SRNC may also
ile for connection with
SRNC.

controls cells used by
ombining and splitting.
ata, but routes the data
UE is using a common
re DRNCs.

nd DRNC functionality.

L1 processing (channel
orms some basic Radio
ogically corresponds to
adopted as a temporary

Interfaces

according to the same
ructure is based on the
ch other, and if needed,
ther parts remain intact.

›rk Layer and the Trans-
e Radio Network Layer,
hnology that is selected

ɜ. It includes the Appli-
Iub), and the Signalling

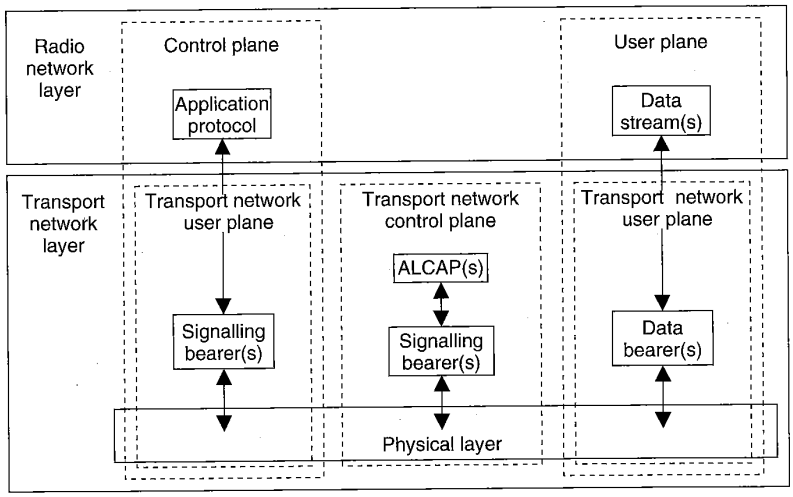

Figure 5.5. General protocol model for UTRAN terrestrial interfaces

The Application Protocol is used, among other things, for setting up bearers to the UE (i.e. the Radio Access Bearer in Iu and subsequently the Radio Link in Iur and Iub). In the three-plane structure the bearer parameters in the Application Protocol are not directly tied to the User Plane technology, but rather are general bearer parameters.

The Signalling Bearer for the Application Protocol may or may not be of the same type as the Signalling Bearer for the ALCAP. It is always set up by O&M actions.

5.3.3.2 User Plane

All information sent and received by the user, such as the coded voice in a voice call or the packets in an Internet connection, are transported via the User Plane. The User Plane includes the Data Stream(s), and the Data Bearer(s) for the Data Stream(s). Each Data Stream is characterised by one or more frame protocols specified for that interface.

5.3.3.3 Transport Network Control Plane

The Transport Network Control Plane is used for all control signalling within the Transport Layer. It does not include any Radio Network Layer information. It includes the ALCAP protocol that is needed to set up the transport bearers (Data Bearer) for the User Plane. It also includes the Signalling Bearer needed for the ALCAP.

The Transport Network Control Plane is a plane that acts between the Control Plane and the User Plane. The introduction of the Transport Network Control Plane makes it possible for the Application Protocol in the Radio Network Control Plane to be completely independent of the technology selected for the Data Bearer in the User Plane.

When the Transport Network Control Plane is used, the transport bearers for the Data Bearer in the User Plane are set up in the following fashion. First there is a signalling transaction by the Application Protocol in the Control Plane, which triggers the setup of the Data Bearer by the ALCAP protocol that is specific for the User Plane technology.

The independence of the Control Plane and the User Plane assumes that an ALCAP signalling transaction takes place. It should be noted that ALCAP might not be used for all types of Data Bearers. If there is no ALCAP signalling transaction, the Transport Network Control Plane is not needed at all. This is the case when preconfigured Data Bearers are used. It should also be noted that the ALCAP protocol(s) in the Transport Network Control Plane is/are not used for setting up the Signalling Bearer for the Application Protocol or for the ALCAP during real-time operation.

The Signalling Bearer for the ALCAP may or may not be of the same type as that for the Application Protocol. The UMTS specifications assume that the Signalling Bearer for ALCAP is always set up by O&M actions, and do not specify this in detail.

5.3.3.4 Transport Network User Plane

The Data Bearer(s) in the User Plane, and the Signalling Bearer(s) for the Application Protocol, also belong to the Transport Network User Plane. As described in the previous section, the Data Bearers in the Transport Network User Plane are directly controlled by the Transport Network Control Plane during real-time operation, but the control actions required for setting up the Signalling Bearer(s) for the Application Protocol are considered O&M actions.

5.4 Iu, the UTRAN–CN Interface

The Iu interface connects UTRAN to CN. Iu is an open interface that divides the system into radio-specific UTRAN and CN which handles switching, routing and service control. As can be seen from Figure 5.3, the Iu can have two different instances, which are Iu CS (Iu Circuit Switched) for connecting UTRAN to Circuit Switched (CS) CN, and Iu PS (Iu Packet Switched) for connecting UTRAN to Packet Switched (PS) CN. The original design goal in the standardisation was to develop only one Iu interface, but then it was realised that fully optimised User Plane transport for CS and PS services can only be achieved if different transport technologies are allowed. Consequently, the Transport Network Control Plane is different. One of the main design guidelines has still been that the Control Plane should be the same for Iu CS and Iu PS, and the differences are minor.

5.4.1 Protocol Structure for Iu CS

The Iu CS overall protocol structure is depicted in Figure 5.6. The three planes in the Iu interface share a common ATM (Asynchronous Transfer Mode) transport which is used for all planes. The physical layer is the interface to the physical medium: optical fibre, radio link or copper cable. The physical layer implementation can be selected from a variety of standard off-the-shelf transmission technologies, such as SONET, STM1, or E1.

5.4.1.1 Iu CS Control Plane Protocol Stack

The Control Plane protocol stack consists of RANAP, on top of Broad Band (BB) SS7 (Signalling System #7) protocols. The applicable layers are the Signalling Connection Control Part (SCCP), the Message Transfer Part (MTP3-b) and SAAL-NNI (Signalling ATM Adaptation Layer for Network to Network Interfaces). SAAL-NNI is further divided into Service Specific Co-ordination Function (SSCF), Service Specific Connection Oriented Protocol

mes that an ALCAP
ght not be used for all
ne Transport Network
ired Data Bearers are
port Network Control
cation Protocol or for

same type as that for
Signalling Bearer for
detail.

) for the Application
cribed in the previous
directly controlled by
at the control actions
otocol are considered

hat divides the system
g and service control.
nces, which are Iu CS
S) CN, and Iu PS (Iu
N. The original design
it then it was realised
n only be achieved if
port Network Control
that the Control Plane
or.

three planes in the Iu
port which is used for
m: optical fibre, radio
cted from a variety of
M1, or E1.

Broad Band (BB) SS7
ng Connection Control
Signalling ATM Adap-
er divided into Service
ion Oriented Protocol

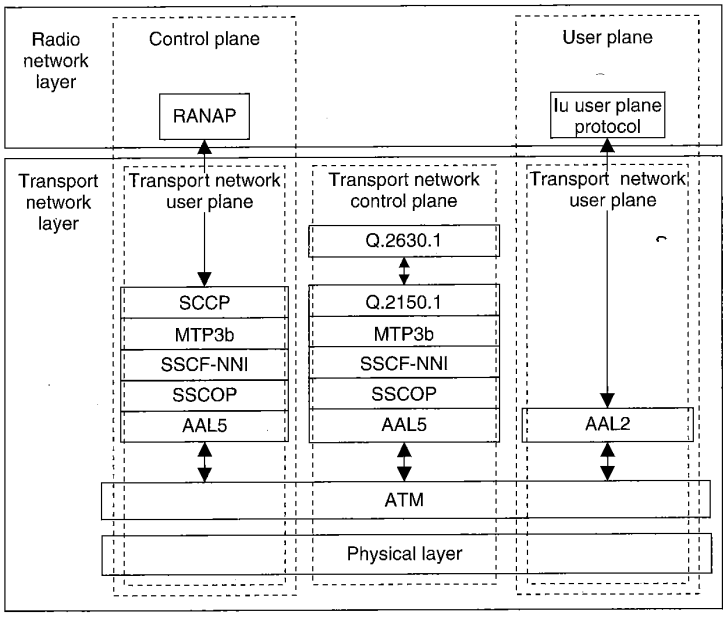

Figure 5.6. Iu CS protocol structure

(SSCOP) and ATM Adaptation Layer 5 (AAL) layers. SSCF and SSCOP layers are specifically designed for signalling transport in ATM networks, and take care of such functions as signalling connection management. AAL5 is used for segmenting the data to ATM cells.

5.4.1.2 Iu CS Transport Network Control Plane Protocol Stack

The Transport Network Control Plane protocol stack consists of the Signalling Protocol for setting up AAL2 connections (Q.2630.1 and adaptation layer Q.2150.1), on top of BB SS7 protocols. The applicable BB SS7 are those described above without the SCCP layer.

5.4.1.3 Iu CS User Plane Protocol Stack

A dedicated AAL2 connection is reserved for each individual CS service. The Iu User Plane Protocol residing directly on top of AAL2 is described in more detail in Section 5.4.4.

5.4.2 Protocol Structure for Iu PS

The Iu PS protocol structure is depicted in Figure 5.7. Again, a common ATM transport is applied for both User and Control Plane. Also the physical layer is as specified for Iu CS.

5.4.2.1 Iu PS Control Plane Protocol Stack

The Control Plane protocol stack again consists of RANAP, and the same BB SS7-based signalling bearer as described in Section 5.4.1.1. Also as an alternative, an IP-based signalling bearer is specified. The SCCP layer is also used commonly for both. The IP-based signalling bearer consists of M3UA (SS7 MTP3—User Adaptation Layer), SCTP (Simple

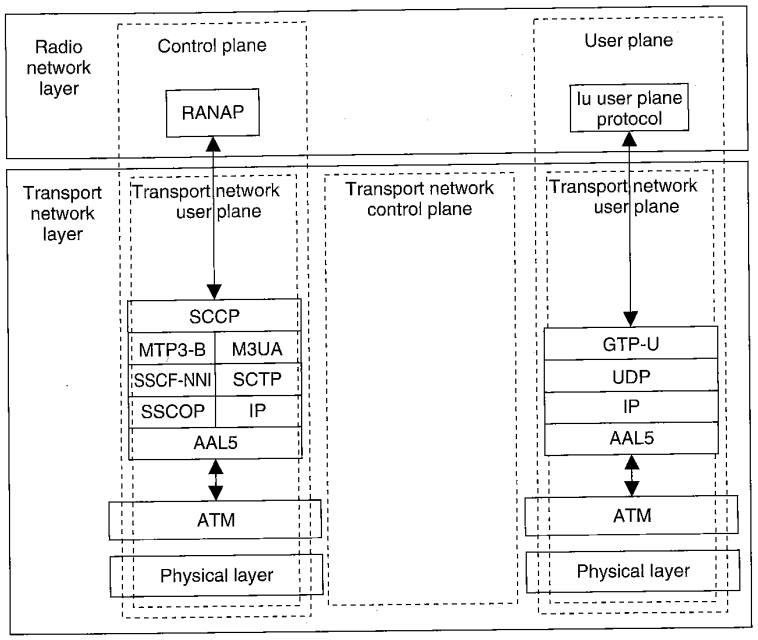

Figure 5.7. Iu PS protocol structure

Control Transmission Protocol), IP (Internet Protocol), and AAL5 which is common to both alternatives. The SCTP layer is specifically designed for signalling transport in the Internet. Specific adaptation layers are specified for different kinds of signalling protocols, such as M3UA for SS7-based signalling.

5.4.2.2 Iu PS Transport Network Control Plane Protocol Stack

The Transport Network Control Plane is not applied to Iu PS. The setting up of the GTP tunnel requires only an identifier for the tunnel, and the IP addresses for both directions, and these are already included in the RANAP RAB Assignment messages. The same information elements that are used in Iu CS for addressing and identifying the AAL2 signalling are used for the User Plane data in Iu CS.

5.4.2.3 Iu PS User Plane Protocol Stack

In the Iu PS User Plane, multiple packet data flows are multiplexed on one or several AAL5 PVCs. The GTP-U (User Plane part of the GPRS Tunnelling Protocol) is the multiplexing layer that provides identities for individual packet data flow. Each flow uses UDP connectionless transport and IP addressing.

5.4.3 RANAP Protocol

RANAP is the signalling protocol in Iu that contains all the control information specified for the Radio Network Layer. The functionality of RANAP is implemented by various RANAP Elementary Procedures. Each RANAP function may require the execution of one

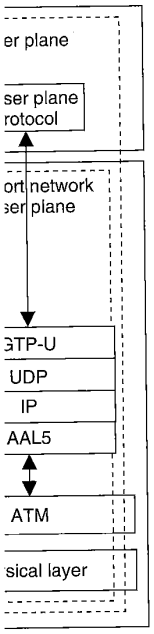

ich is common to both
ansport in the Internet.
ling protocols, such as

setting up of the GTP
for both directions, and
. The same information
AL2 signalling are used

xed on one or several
Protocol) is the multi-
v. Each flow uses UDP

l information specified
nplemented by various
re the execution of one

or more EPs. Each EP consists of either just the request message (class 2 EP), the request and response message pair (class 1 EP), or one request message and one or more response messages (class 3 EP). The following RANAP functions are defined:

- Relocation. This function handles both SRNS Relocation and Hard Handover, including intersystem case to/from GSM:
  - SRNS Relocation: the serving RNS functionality is relocated from one RNS to another without changing the radio resources and without interrupting the user data flow. The prerequisite for SRNS relocation is that all Radio Links are already in the same DRNC that is the target for the relocation.
  - Inter RNS Hard Handover: used to relocate the serving RNS functionality from one RNS to another and to change the radio resources correspondingly by a hard handover in the Uu interface. The prerequisite for Hard Handover is that the UE is at the border of the source and target cells.
- RAB (Radio Access Bearer) Management. This function combines all RAB handling:
  - RAB Setup, including the possibility for queuing the setup,
  - modification of the characteristics of an existing RAB,
  - clearing an existing RAB, including the RAN-initiated case.
- Iu Release. Releases all resources (Signalling link and U-Plane) from a given instance of Iu related to the specified UE. Also includes the RAN-initiated case.
- Reporting Unsuccessfully Transmitted Data. This function allows the CN to update its charging records with information from UTRAN if part of the data sent was not successfully sent to the UE.
- Common ID management. In this function the permanent identification of the UE is sent from the CN to UTRAN to allow paging coordination from possibly two different CN domains.
- Paging. This is used by CN to page an idle UE for a UE terminating service request, such as a voice call. A paging message is sent from the CN to UTRAN with the UE common identification (permanent Id) and the paging area. UTRAN will either use an existing signalling connection, if one exists, to send the page to the UE or broadcast the paging in the requested area.
- Management of tracing. The CN may, for operation and maintenance purposes, request UTRAN to start recording all activity related to a specific UE–UTRAN connection.
- UE–CN signalling transfer. This functionality provides transparent transfer of UE–CN signalling messages that are not interpreted by UTRAN in three cases:
  - Transfer of the first UE message from UTRAN to UE: this may be, for example, a response to paging, a request of a UE-originated call, or just registration to a new area. It also initiates the signalling connection for the Iu.
  - Direct Transfer: used for carrying all consecutive signalling messages over the Iu signalling connection in both the uplink and downlink directions.

- CN Information Broadcast: allows the CN to set system information to be broadcast repetitively to all users in a specified area.

- Security Mode Control. This is used to set the ciphering or integrity checking on or off. When ciphering is on, the signalling and user data connections in the radio interface are encrypted with a secret key algorithm. When integrity checking is on, an integrity checksum, further secured with a secret key, is added to some or all of the Radio Interface signalling messages. This ensures that the communication partner has not changed, and the content of the information has not been altered.
- Management of overload. This is used to control the load over the Iu interface against overload due, for example, to processor overload at the CN or UTRAN. A simple mechanism is applied that allows stepwise reduction of the load and its stepwise resumption, triggered by a timer.
- Reset. This is used to reset the CN or the UTRAN side of the Iu interface in error situations. One end of the Iu may indicate to the other end that it is recovering from a restart, and the other end can remove all previously established connections.
- Location Reporting. This functionality allows the CN to receive information on the location of a given UE. It includes two elementary procedures, one for controlling the location reporting in the RNC and the other to send the actual report to the CN.

5.4.4 Iu User Plane Protocol

The Iu User Plane protocol is in the Radio Network Layer of the Iu User Plane. It has been defined so that it would be, as much as possible, independent of the CN domain that it is used for. The purpose of the User Plane protocol is to carry user data related to RABs over the Iu interface. Each RAB has its own instance of the protocol. The protocol performs either a fully transparent operation, or framing for the user data segments and some basic control signalling to be used for initialisation and online control. Based on these cases, the protocol has two modes:

- Transparent Mode. In this mode of operation the protocol does not perform any framing or control. It is applied for RABs that do not require such features but that assume fully transparent operation.
- Support Mode for predefined SDU sizes. In this mode the User Plane performs framing of the user data into segments of predefined size. The SDU sizes typically correspond to AMR (Adaptive Multirate Codec) speech frames, or to the frame sizes derived from the data rate of a CS data call. Also, control procedures for initialisation and rate control are defined, and a functionality is specified for indicating the quality of the frame based, for example, on CRC from the radio interface.

5.5 UTRAN Internal Interfaces

5.5.1 RNC–RNC Interface (Iur Interface) and the RNSAP Signalling

The protocol stack of the RNC to RNC interface (Iur interface) is shown in Figure 5.8.

nation to be broadcast

ty checking on or off.
in the radio interface
ing is on, an integrity
of the Radio Interface
has not changed, and

ne Iu interface against
RAN. A simple mech-
; stepwise resumption,

: Iu interface in error
t is recovering from a
:onnections.

ve information on the
one for controlling the
port to the CN.

User Plane. It has been
: CN domain that it is
a related to RABs over
The protocol performs
;ments and some basic
sed on these cases, the

ot perform any framing
:s but that assume fully

Plane performs framing
typically correspond to
: sizes derived from the
sation and rate control
lity of the frame based,

gnalling

:hown in Figure 5.8.

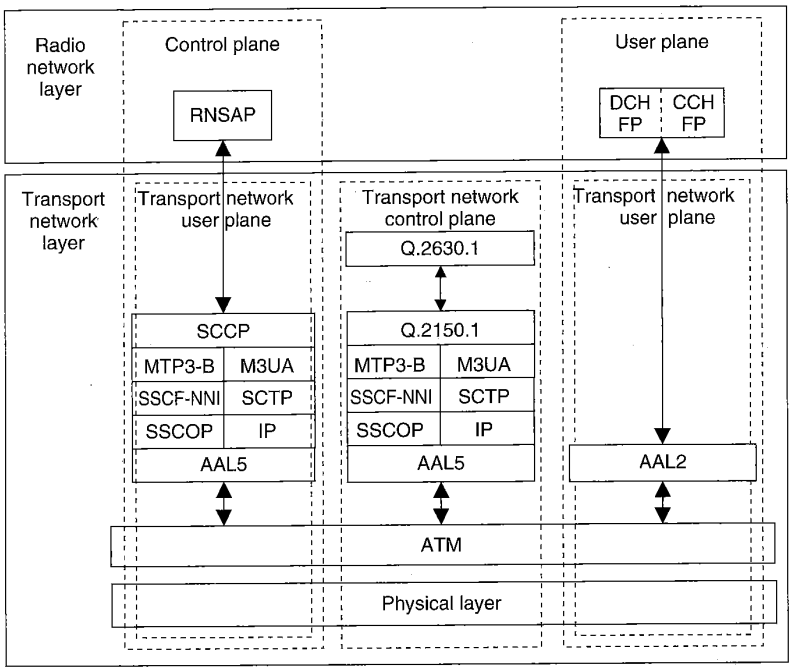

Figure 5.8. Protocol stack of the Iur interface. As for the Iu interface, two options are possible for the transport of the RNSAP signalling: the SS7 stack (SCCP and MTP3b) and the new SCTP/IP based transport. Two User Plane protocols are defined (DCH: dedicated channel; CCH: common channel)

Although this interface was initially designed in order to support the inter-RNC soft handover (shown on the left-hand side of Figure 5.4), more features were added during the development of the standard and now the Iur interface provides four distinct functions:

1. Support of Basic Inter-RNC Mobility
2. Support of Dedicated Channel Traffic
3. Support of Common Channel Traffic
4. Support of Global Resource Management

For this reason the Iur signalling protocol itself (RNSAP, *Radio Network System Application Part*) is divided into four different *modules* (to be intended as groups of procedures). In general, it is possible to implement only part of the four Iur functions between two Radio Network Controllers, according to the operator's need.

5.5.1.1 Iur1: Support of the Basic Inter-RNC Mobility

This functionality requires the *basic* module of RNSAP signalling as described in [25.423]. This first brick for the construction of the Iur interfaces provides by itself the functionality needed for the mobility of the user between the two RNCs, but does not support the exchange of any user data traffic. If this module is not implemented, the Iur interface as such does

not exist, and the only way for a user connected to UTRAN via the RNS1 to utilise a cell in RNS2 is to disconnect itself temporarily from UTRAN (release the RRC connection).

The functions offered by the Iur basic module include:

- *Support of SRNC relocation*
- *Support of inter-RNC cell and UTRAN registration area update*
- *Support of inter-RNC packet paging*
- *Reporting of protocol errors*

Since this functionality does not involve user data traffic across Iur, the User Plane and the Transport Network Control Plane protocols are not needed.

5.5.1.2 Iur2: Support of Dedicated Channel Traffic

This functionality requires the *Dedicated Channel* module of RNSAP signalling and allows the dedicated channel traffic between two RNCs. Even if the initial need for this functionality is to support the inter-RNC soft handover state, it also allows the anchoring of the SRNC for all the time the user is utilising dedicated channels (dedicated resources in the Node B), commonly for as long as the user has an active connection to the circuit-switched domain.

This functionality requires also the User Plane *Frame Protocol* for the dedicated channel, plus the Transport Network Control Plane protocol (*Q.2630.1*) used for the setup of the transport connections (AAL2 connections). Each dedicated channel is conveyed over one transport connection, except the coordinated DCH used to obtain unequal error protection in the air interface.

The *Frame Protocol* for dedicated channels, in short DCH FP [25.427], defines the structure of the *data frames* carrying the user data and the *control frames* used to exchange measurements and control information. For this reason, the Frame Protocol specifies also simple messages and procedures. The user data frames are normally routed transparently through the DRNC; thus the Iur frame protocol is used also in Iub and referred to as Iur/Iub DCH FP.

The functions offered by the Iur DCH module are:

- *Establishment, modification and release of the dedicated channel in the DRNC due to hard and soft handover in the dedicated channel state*
- *Setup and release of dedicated transport connections across the Iur interface*
- *Transfer of DCH Transport Blocks between SRNC and DRNC*
- *Management of the radio links in the DRNS, via dedicated measurement report procedures and power setting procedures*

5.5.1.3 Iur3: Support of Common Channel Traffic

This functionality allows the handling of common and shared channel data streams across the Iur interface. It requires the Common Transport Channel module of the RNSAP protocol and the Iur Common Transport Channel Frame Protocol (in short, CCH FP). The Q.2630.1

RNS1 to utilise a cell
ıe RRC connection).

ur, the User Plane and

P signalling and allows
ed for this functionality
nchoring of the SRNC
ources in the Node B),
rcuit-switched domain.
the dedicated channel,
d for the setup of the
is conveyed over one
nequal error protection

P [25.427], defines the
ames used to exchange
Protocol specifies also
ly routed transparently
ıd referred to as Iur/Iub

el in the DRNC due to

e Iur interface

surement report proce-

ınel data streams across
of the RNSAP protocol
CH FP). The Q.2630.1

signalling protocol of the Transport Network Control Plane is also needed if signalled AAL2 connections are used.

If this functionality is not implemented, every inter-RNC cell update always triggers an SRNC relocation, i.e. the serving RNC is always the RNC controlling the cell used for common or shared channel transport.

The identification of the benefits of this feature caused a long debate in the relevant standardisation body. On the one hand, this feature allows the implementation of the total anchor RNC concept, avoiding the complex SRNC relocation procedure (via the CN); on the other hand, it requires the splitting of the Medium Access Control layer functionality into two network elements, generating inefficiency in the utilisation of the resources and complexity in the Iur interface. The debate could not reach an agreement, thus the feature is supported by the standard but is not essential for the operation of the system.

The functions offered by the Iur common transport channel module are:

- *Setup and release of the transport connection across the Iur for common channel data streams*
- *Splitting of the MAC layer between the SRNC (MAC-d) and the DRNC (MAC-c and MAC-sh). The scheduling for DL data transmission is performed in the DRNC*
- *Flow control between the MAC-d and MAC-c/MAC-sh*

5.5.1.4 Iur4: Support of Global Resource Management

This functionality provides signalling to support enhanced radio resource and O&M features across the Iur interface. It is implemented via the *global module* of the RNSAP protocol, and does not require any User Plane protocol, since there is no transmission of user data across the Iur interface. The function is considered optional. This function is not present in the Release'99 UTRAN specification, but it is foreseen to be introduced in subsequent releases for the support of advanced positioning methods and Iur optimisation purposes.

The functions offered by the Iur global resource module are:

- *Transfer of cell measurements between two RNCs*
- *Transfer of Node B timing information between two RNCs*

5.5.2 RNC–Node B Interface and the NBAP Signalling

The protocol stack of the RNC–Node B interface (Iub interface) is shown, with the typical triple plane notation, in Figure 5.9.

In order to understand the structure of the interface, it is necessary to briefly introduce the logical model of the Node B, depicted in Figure 5.10. This consists of a common control port (a common signalling link) and a set of traffic termination points, each controlled by a dedicated control port (dedicated signalling link). One traffic termination point controls a number of mobiles having dedicated resources in the Node B, and the corresponding traffic is conveyed through dedicated data ports. Common data ports outside the traffic termination points are used to convey RACH, FACH and PCH traffic.

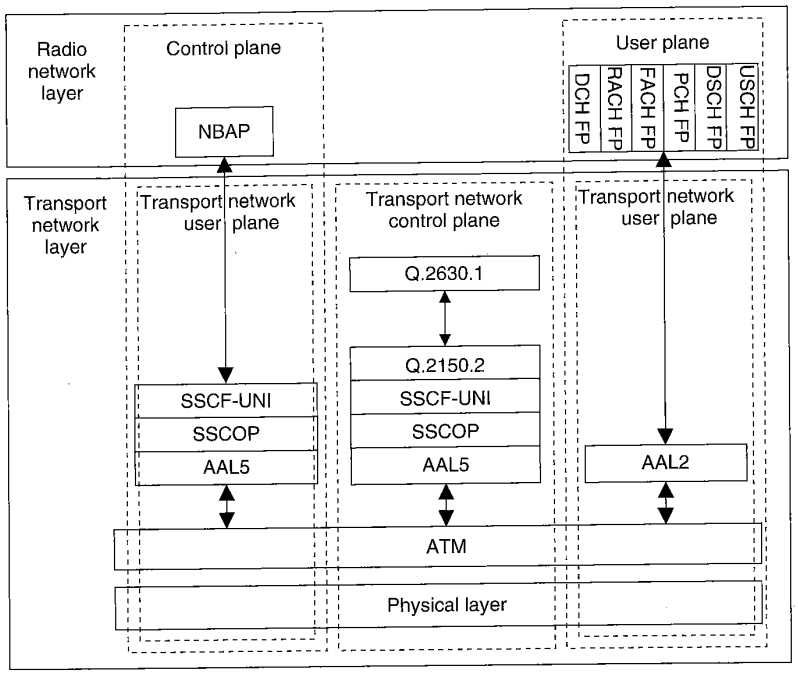

Figure 5.9. Protocol stack of the Iub interface. This is similar to the Iur interface protocol, the main difference being that in the Radio Network and Transport Network Control Planes the SS7 stack is replaced by the simpler SAAL-UNI as signalling bearer. Note also that the SCTP/IP option is not present here

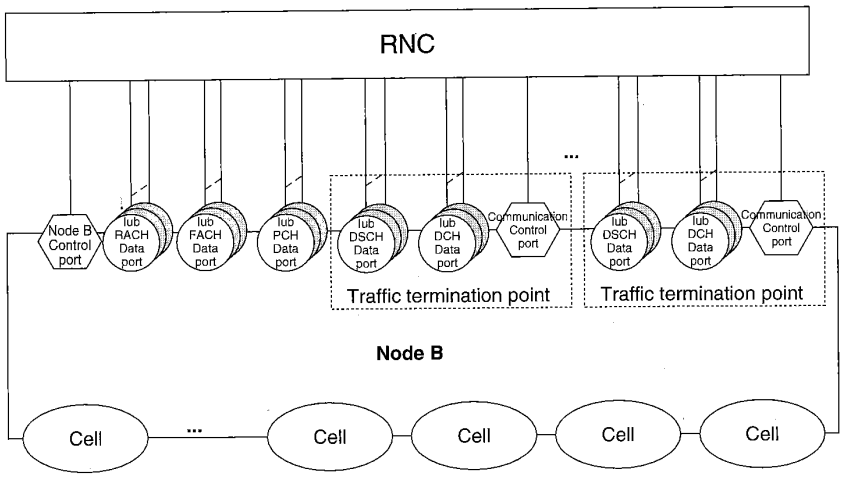

Figure 5.10. Logical model of the Node B for FDD

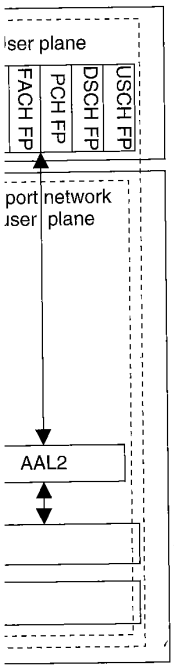

erface protocol, the main
l Planes the SS7 stack is
e SCTP/IP option is not

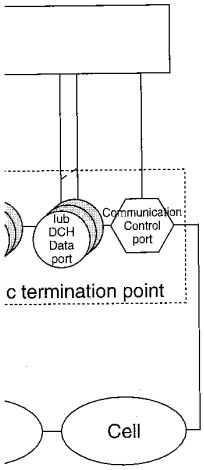

D

Note that there is no relation between the traffic termination point and the cells, i.e. one traffic termination point can control more than one cell, and one cell can be controlled by more than one traffic termination point.

The Iub interface signalling (NBAP, *Node B Application Part*) is divided into two essential components: the common NBAP, that defines the signalling procedures across the common signalling link, and the dedicated NBAP, used in the dedicated signalling link.

The User Plane Iub frame protocols define the structures of the frames and the basic in-band control procedures for every type of transport channel (i.e. for every type of data port of the model). The Q.2630.1 signalling is used for the dynamic management of the AAL2 connections used in the User Plane.

5.5.2.1 Common NBAP and the Logical O&M

The common NBAP (C-NBAP) procedures are used for the signalling that is not related to one specific UE context already existing in the Node B. In particular, the C-NBAP defines all the procedures for the logical O&M (Operation and Maintenance) of the Node B, such as configuration and fault management.

The main functions of the Common NBAP are:

- *Setup of the first RL of one UE, and selection of the traffic termination point*
- *Cell configuration*
- *Handling of the RACH/FACH and PCH channels*
- *Initialisation and reporting of Cell or Node B specific measurement*
- *Fault management*

5.5.2.2 Dedicated NBAP

When the RNC requests the first radio link for one UE via the C-NBAP *Radio Link Setup* procedure, the Node B assigns a traffic termination point for the handling of this UE context, and every subsequent signalling related to this mobile is exchanged with dedicated NBAP (D-NBAP) procedures across the dedicated control port of the given Traffic Termination Point.

The main functions of the Dedicated NBAP are:

- *Addition, release and reconfiguration of radio links for one UE context*
- *Handling of dedicated and shared channels*
- *Handling of softer combining*
- *Initialisation and reporting of radio link specific measurement*
- *Radio link fault management*

References

[1] 3GPP Technical Specification 25.401 UTRAN Overall Description.
[2] 3GPP Technical Specification 25.410 UTRAN Iu Interface: General Aspects and Principles.
[3] 3GPP Technical Specification 25.411 UTRAN Iu Interface: Layer 1.

[4] 3GPP Technical Specification 25.412 UTRAN Iu Interface: Signalling Transport.
[5] 3GPP Technical Specification 25.413 UTRAN Iu Interface: RANAP Signalling.
[6] 3GPP Technical Specification 25.414 UTRAN Iu Interface: Data transport and Transport Signalling.
[7] 3GPP Technical Specification 25.415 UTRAN Iu Interface: CN-RAN User Plane Protocol.
[8] 3GPP Technical Specification 25.420 UTRAN Iur Interface: General Aspects and Principles.
[9] 3GPP Technical Specification 25.421 UTRAN Iur Interface: Layer 1.
[10] 3GPP Technical Specification 25.422 UTRAN Iur Interface: Signalling Transport.
[11] 3GPP Technical Specification 25.423 UTRAN Iur Interface: RNSAP Signalling.
[12] 3GPP Technical Specification 25.424 UTRAN Iur Interface: Data Transport and Transport Signalling for CCH Data Streams.
[13] 3GPP Technical Specification 25.425 UTRAN Iur Interface: User Plane Protocols for CCH Data Streams.
[14] 3GPP Technical Specification 25.426 UTRAN Iur and Iub Interface Data Transport and Transport Signalling for DCH Data Streams.
[15] 3GPP Technical Specification 25.427 UTRAN Iur and Iub Interface User Plane Protocols for DCH Data Streams.
[16] 3GPP Technical Specification 25.430 UTRAN Iub Interface: General Aspects and Principles.
[17] 3GPP Technical Specification 25.431 UTRAN Iub Interface: Layer 1.
[18] 3GPP Technical Specification 25.432 UTRAN Iub Interface: Signalling Transport.
[19] 3GPP Technical Specification 25.433 UTRAN Iub Interface: NBAP Signalling.
[20] 3GPP Technical Specification 25.434 UTRAN Iub Interface: Data Transport and Transport Signalling for CCH Data Streams.
[21] 3GPP Technical Specification 25.435 UTRAN Iub Interface: User Plane Protocols for CCH Data Streams.