United States Patent [19]

Kopish et al.

[11] **Patent Number: 4,755,035**

[45] **Date of Patent: Jul. 5, 1988**

[54] **DISPLAY ASSEMBLY FOR LCD'S**

[75] Inventors: **Stephen P. Kopish**, Wheeling; **Michael L. Shababy**, Stone Park; **Steven Rokita**, Chicago, all of Ill.

[73] Assignee: **Motorola, Inc.**, Schaumburg, Ill.

[21] Appl. No.: **107,854**

[22] Filed: **Oct. 6, 1987**

Related U.S. Application Data

[63] Continuation-in-part of Ser. No. 833,936, Feb. 25, 1986.

[51] **Int. Cl.**[4] **G02F 1/13**

[52] **U.S. Cl.** **350/345**; 350/334

[58] **Field of Search** 350/334, 345; 368/30, 368/84, 242; 362/19, 20

[56] **References Cited**

U.S. PATENT DOCUMENTS

3,864,905	2/1975	Richardson	58/50 R
4,017,155	4/1977	Yagi et al.	350/160 LC
4,212,048	7/1980	Castleberry	362/19
4,218,775	8/1980	Cox et al.	455/344
4,252,416	2/1981	Jaccard	350/345
4,277,817	7/1981	Hehr	362/31
4,294,517	10/1981	Jakubek	350/345

FOREIGN PATENT DOCUMENTS

0167368	1/1986	European Pat. Off.	350/334
2121583	12/1983	United Kingdom	350/334

OTHER PUBLICATIONS

"An LCD Display Assembly", by Steven P. Kopish and Ronald E. Petersen, Motorola Technical Developments, vol. 2, Jan. 1982, pp. 51–52.

"Light Balancing for Multiple Gauges", by Tom R. Kawall, Motorola Technical Developments, vol. 4, Apr. 1984, pp. 40–41.

"Lighting Arrangement for Instruments", by Tom R. Kawall, Motorola Technical Developments, vol. 4, Apr. 1984, pp. 48–49.

Primary Examiner—Stanley D. Miller
Assistant Examiner—Trong Quang Phan
Attorney, Agent, or Firm—Phillip H. Melamed

[57] **ABSTRACT**

A display assembly for an LCD device is disclosed wherein the LCD essentially comprises an elongated horizontal plate. The LCD is mounted in a recessed portion of the top surface of a carrier made of light transmitting material with preferably the back surface of the LCD contacting the carrier top surface. Beneath the LCD, the carrier has an effective wedge-shaped portion, or at least an inclined planar surface of the carrier, and a light source is effectively positioned adjacent the carrier. At least one retainer member is utilized to mount the LCD to the carrier with edges of the carrier top surface recessed portion laterally surrounding and thereby laterally locating the LCD device with respect to the carrier. The preceding configuration allows the carrier to provide for backlighting of the LCD since the carrier serves as a light pipe in addition to providing mounting structure for the LCD. Lateral extending portions of the top surface of the carrier are positioned adjacent to graphics, in a coverplate of the LCD assembly, which are to be backlighted. The retainer member may comprise a molded plastic part having two main planar extensions forming an angle less than the angle of the carrier end surfaces which mate with the retainer. Such retainer member has latching projections that engage the carrier such that a snap-together subassembly, capable of hand assembly, is provided comprising the carrier, the LCD and the retainer member.

26 Claims, 5 Drawing Sheets

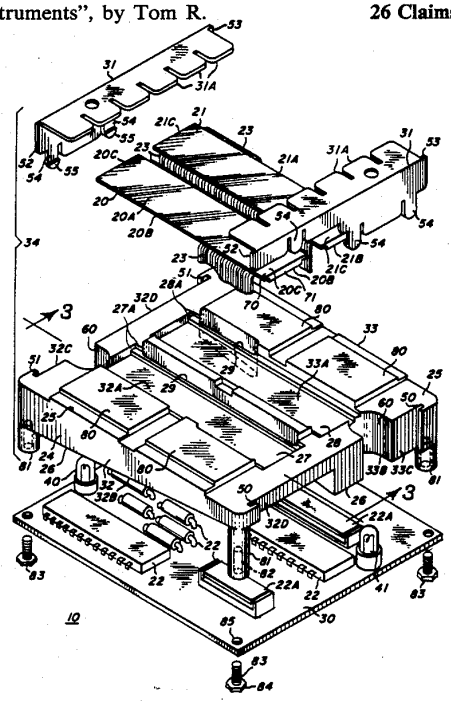

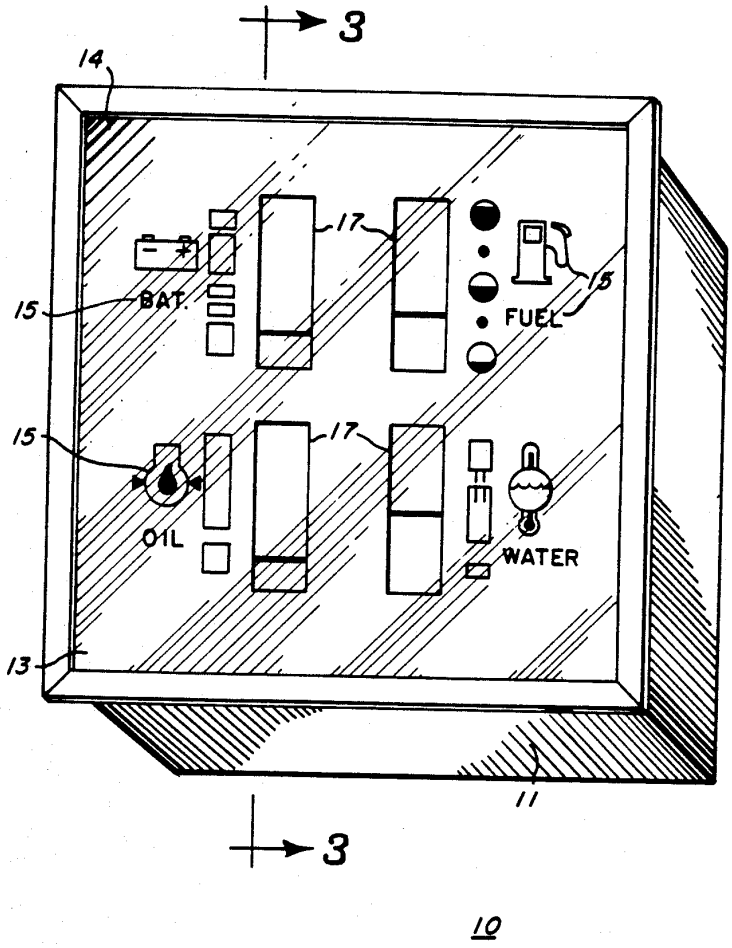

Fig. 1

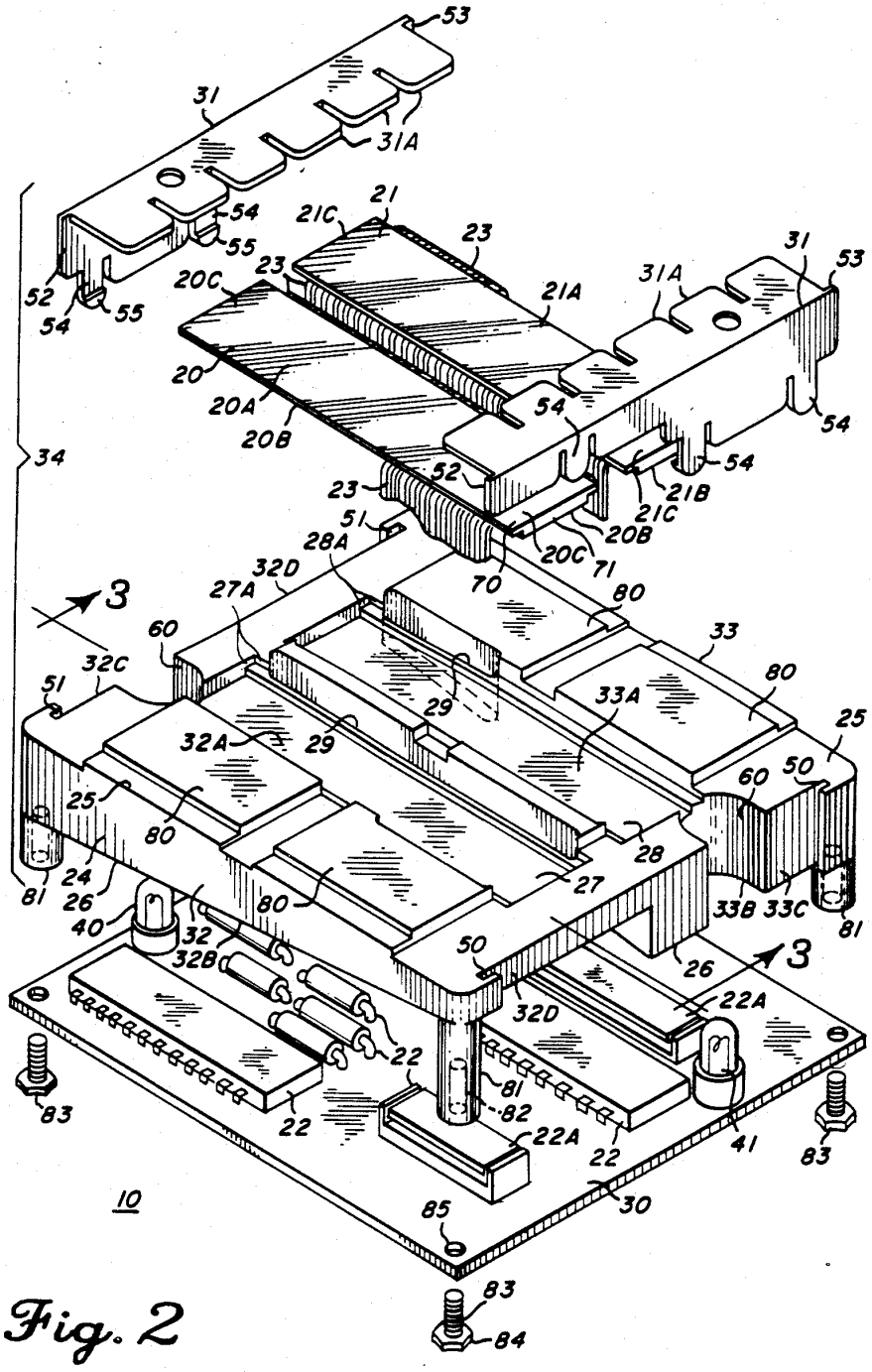
53
31
31A
54
55
52
54
55
21C
21
23
20C
23
21A
31A
31
53
20
20A
20B
54
54
34
52
23
21B
21C
51
20B
28A
20C
71
32D
70
80
3
27A
60
33
32C
80
51
29
33A
25
32A
29
60
50
25
80
28
24
27
81
26
80
33B
33C
81
40
32
32B
50
26
3
22A
32D
22
81
83
82
22A
22
41
83
10
85
30
83
84

Fig. 2

Fig. 3

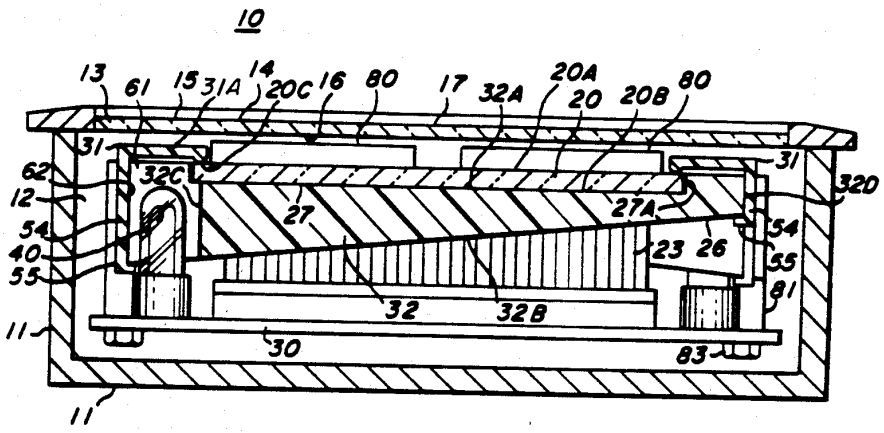
10
13
61
15
31A
14
20C
16
80
17
32A
20A
20
20B
80
31
62
12
54
40
55
32C
27
27A
31
320
54
23
26
55
81
32
32B
11
30
83
11

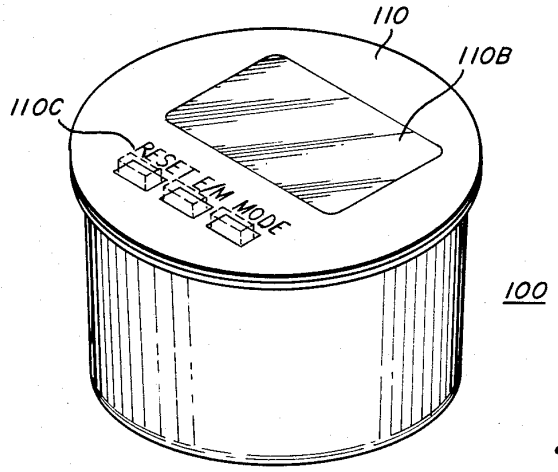
110
110B
110C
RESET E/M MODE
100

Fig. 4

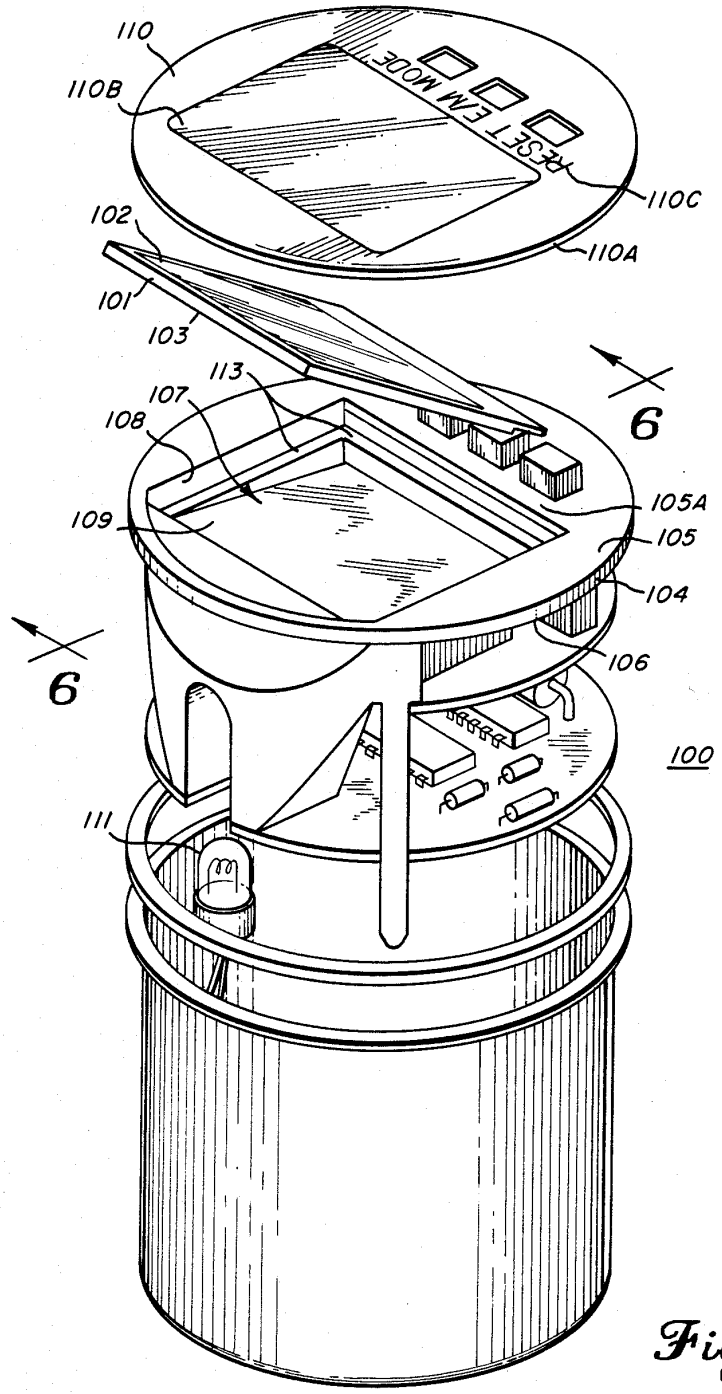
110
110B
RESET
EM MODE
110C
110A
102
101
103
113
107
108
6
105A
109
105
104
6
106
100
111

Fig. 5

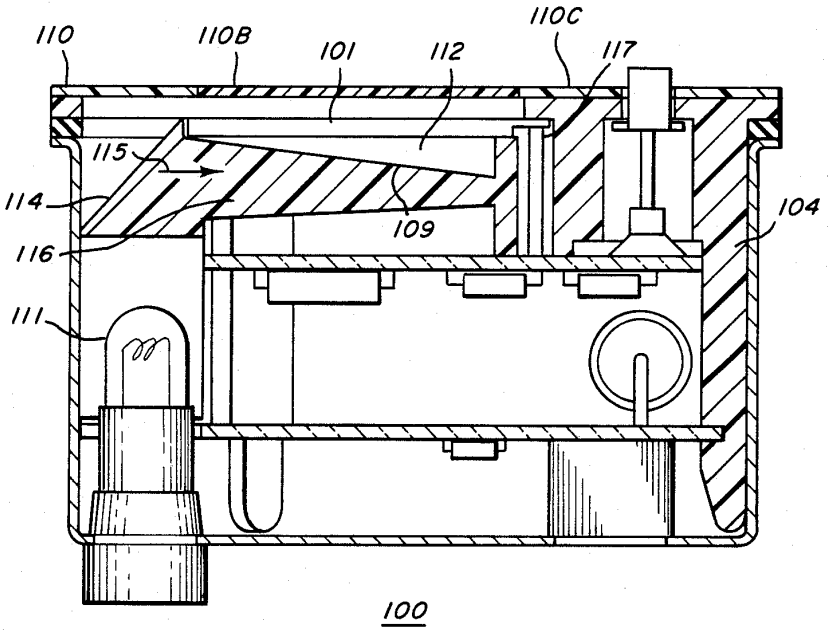

Fig. 6

DISPLAY ASSEMBLY FOR LCD'S

This is a continuation-in-part of application Ser. No. 833,936 filed Feb. 25, 1986.

BACKGROUND OF THE INVENTION

The present invention is related to display assemblies usable for mounting and providing illumination for LCD (liquid crystal display) devices. More specifically, the present invention is related to such display assemblies which provide suitable backlighting for LCD devices.

Typically, LCD's have a general plate-type configuration and are electrically connected to driver electronics such that various graphic patterns can be selectively provided when the LCD is viewed from either its top or bottom surface. LCD assemblies may be configured just to utilize ambient reflected light, but typically these assemblies are unsuitable for low levels of ambient light. In such situations, selective electrical backlighting of the LCD is typically provided. Various techniques are utilized to provide uniform electrical backlighting of the LCD.

Generally the LCD is mounted in a display housing and is positioned within the housing by an LCD carrier to which the LCD is mounted. The carrier is used to properly orient the LCD with respect to the housing and other components. The carrier and LCD are then mounted to a printed circuit board, containing the LCD drive electronics, which is mounted to the display housing.

Typically, assemblies such as those described above are relatively complex and require a number of individual parts to insure both uniform lighting of the LCD and proper mounting of the LCD within the display housing. An example of one such previous display assembly is illustrated in an article entitled "An LCD Display Assembly", pages 51–52 of Volume 2, Motorola Technical Developments, January, 1982. The display assembly illustrated in this article utilizes numerous mounting structures and requires complex assembly since, until the LCD and carrier are mounted to the printed circuit board, a large number of assembly components are only loosely positioned in their appropriate places. In addition, the above-noted assembly would require, if possible, additional structure in order to accomplish uniform backlighting of the LCD by any point light source. Also, typically fixed graphic legends are provided and associated with the LCD display, wherein such graphics are desired to be constantly illuminated, as contrasted with the selective LCD visual display to be produced. Providing illumination for these graphics would typically require separate additional light illumination sources and/or structure which would further complicate the LCD assembly.

While some prior systems have proposed utilization of wedge-shaped light pipe structures to obtain uniform backlighting of LCD devices, providing such an additional wedge-shaped light pipe structure would appear to even further complicate assemblies such as that shown in the above-noted Motorola article.

SUMMARY OF THE INVENTION

An object of the present invention is to provide an improved LCD display assembly which overcomes the above-mentioned deficiencies of prior display assemblies.

In one embodiment of the present invention an LCD display assembly is provided. The display assembly comprises an LCD device having a general plate-type configuration with substantially planar top and bottom surfaces, the LCD device selectively providing a desired visual display when the device is viewed from above the LCD top surface. A carrier is provided which has top and bottom surfaces. The carrier top surface has a recessed portion within which the LCD device is positioned, and edges of the carrier recessed portion laterally surround the LCD device and thereby laterally locate the LCD device with respect to the carrier. A retainer means is provided which is coupled to and joins together the LCD device and the carrier. The retainer means has extending portions which contact peripheral portions of the LCD top surface and bias the LCD device against the carrier. A light source is provided for lighting the LCD device. In the present invention, the carrier is made from a light transmitting material and has a generally wedge-shaped portion that has a substantially planar top surface, which is part of the carrier recessed top surface portion, positioned in effective planar surface contact with the LCD bottom surface. The carrier has a substantially planar bottom surface of the wedge portion inclined with respect to the wedge top surface, and the wedge portion has major and minor generally vertically projecting end surfaces between and located generally at opposite ends of the top and bottom wedge surfaces. The light source is effectively positioned adjacent the major vertical end surface of the wedge portion, and the wedge portion effectively forms a light pipe for obtaining uniform backlighting of the LCD device by the light source while also providing a carrier structure for the LCD device.

The above-noted configuration of components result in a simplified assembly for the present LCD display assembly invention. This is because the carrier not only provides for locating and providing protection for the LCD device, but also, due to its being constructed of light transmitting material, the carrier provides for uniform backlighting of the LCD since the carrier also serves as a light pipe. The wedge-shaped portion of the carrier is utilized to insure uniform backlighting of the LCD device which preferably comprises an elongated plate configuration with a major axis of the LCD device extending generally from effective major and minor vertical end surfaces of the wedge-shaped portion of the carrier.

A major feature of the present invention is that a planar surface of the carrier is positioned beneath and inclined with respect to the LCD bottom surface. This will provide LCD backlighting from a point light source effectively positioned adjacent to the carrier. The exact configuration of the retainer means is not significant for this specific feature. In addition, for some embodiements of this feature, the carrier portion beneath the LCD may not necessarily be in the form of a wedge, and even if a wedge, this portion is not necessarily directly in planar contact with the LCD bottom surface, and may be spaced therefrom.

Preferably, the top surface of the carrier has lateral extending portions that are positioned laterally adjacent to the LCD device top surface. Since the carrier is of light transmitting material, these lateral extending portions will also be illuminated by the light source. These portions of the carrier top surface will be positioned adjacent graphics in a display coverplate which has a

clear viewing area positioned directly above the LCD top surface. This configuration readily permits illumination of the graphics with no substantial increase in display cost or complexity.

In addition to the preceding features, the retainer means utilized in the present invention will preferably comprise at least one molded plastic part, a spring clip, having extending spring action fingers that contact the LCD device and carrier and provide a snap-together subassembly which can be assembled by hand. Typically the retainer clip will have two main planar surfaces that form an angle which is nominally less than the angle of a mating rigid end corner of the carrier to which the retainer will mate. Generally two of these retainer clips will be provided.

Preferably, the LCD device will not utilize the conventional zebra strips that typically provide electrical connection to the LCD device. Instead, flexible flat printed circuit cables will provide electrical connections between drive electronics and the LCD device. Elongated slots are provided in the carrier for these cables which connect the LCD device to drive electronics mounted on a printed circuit board positioned below the wedge portion bottom surface.

In addition, preferably a pair of LCD devices will be mounted to the same carrier with each device comprising an elongated plate configuration with the major elongated axes of the LCD devices being substantially parallel to one another. With this configuration, preferably separate wedge-shaped portions are provided in the carrier for each of the LCD's with the bottom inclined surfaces of each of the wedge-shaped portions each extending upward towards the LCD but in generally opposite lateral directions such that each wedge-shaped portion has its associated major vertical end surface located at opposite ends of the carrier. With this configuration, separate light sources are positioned adjacent to each of the major vertical end surfaces of the carrier. The light sources will provide uniform backlighting for the pair of LCD devices.

Preferably, threaded holes in mounting posts are provided in the carrier such that mounting screws subsequently mount the carrier subassembly, comprising the carrier, LCD devices and snap-on clips, to the printed circuit board assembly containing the drive electronics.

The above features of the present invention, as well as additional advantages and features of the present invention, are discussed further in the subsequent detailed description of the present invention.

BRIEF DESCRIPTION OF THE DRAWINGS

For a more complete understanding of the present invention, reference should be made to the drawings in which:

FIG. **1** is a perspective view of a fully-assembled LCD assembly constructed in accordance with the present invention;

FIG. **2** is an exploded perspective view illustrating several major components of the display assembly shown in FIG. **1**;

FIG. **3** is a cross-sectional view of the display assembly shown in FIGS. **1** and **2** taken along the lines **3—3** in FIGS. **1** and **2** after assembly of the components;

FIG. **4** is a perspective view of another LCD assembly;

FIG. **5** is an exploded perspective view of several major components of the assembly shown in FIG. **4**; and

FIG. **6** is a cross-sectional view of the assembly shown in FIG. **5** taken along lines **6—6** after assembly.

DESCRIPTION OF THE PREFERRED EMBODIMENTS OF THE INVENTION

Referring to FIG. **1**, an LCD display assembly **10** is illustrated after assembly of all of its components. FIG. **2** illustrates major components of this same assembly **10**, but illustrates them in exploded assembly form. FIG. **1** shows a cross-sectional view of the assembly **10**. The assembly **10** includes a metal outer housing **11** which essentially provides an internal cavity **12** for substantially all components of the display assembly. This internal cavity is closed by a top thick glass coverplate **13** having a horizontal top view surface **14**, which includes graphics **15** intended to be constantly illuminated, and a substantially planar bottom surface **16**. The coverplate also includes four clear areas **17** through which top surfaces of a pair of LCD's are viewable. Each of the LCD's will selectively provide desired visual displays, movable bar lines, for example, in accordance with received electrical drive signals.

It should be noted that the terms "horizontal", "vertical", "top" and "bottom" are utilized herein merely to designate the relative orientation of the positioning of various components of the present invention, wherein these terms directly apply to the display assembly as shown in FIGS. **2** and **3**. However, clearly the display assembly, while illustrated in FIGS. **2** and **3** in essentially a horizontal orientation, could be subsequently rotated to provide a vertical orientation, or any other desires orientation. Thus, it should be understood that the preceding terms merely designate relative orientation positioning. The term "lateral" as used herein refers to a horizontal orientation as shown in FIGS. **2** and **3**.

Referring now more specifically to FIG. **2**, the display assembly **10** is illustrated as comprising a pair of LCD devices **20** and **21** each having a general elongated rectangular plate-type configuration with substantially planar top and bottom surfaces **20A** and **20B** and **21A** and **21B**, respectively. Each of the LCD devices is capable of selectively providing a desired visual display when the top surface of the device is viewed from above its top surface. The selection of the display to be provided is determined by display drive electronics **22** which, while only partially shown in FIG. **2**, will be connected to the LCD's through flexible flat printed circuit cables generally designated by the reference numeral **23** that emanate from elongated lateral sides of the LCD devices **20** and **21**. Only portions of the cables **23** are shown in FIG. **2** to maintain clarity of the drawing.

The LCD devices **20** and **21** will be mounted to a unitary LCD carrier **24**. The carrier **24** has top and bottom surfaces **25** and **26**, respectively, with each of the LCD devices **20** and **21** being positioned within recessed portions **27** and **28** of the carrier top surface **25**. It should be noted that edges **27A** and **28A** of the recessed portions **27** and **28** laterally surround each of the LCD devices and thereby laterally locate these devices with respect to the carrier. Elongated through slots **29** extend from the carrier top and bottom surfaces **25** and **26** and provide through paths for the flexible cables **23** associated with each of the LCD devices. It is contemplated that while the LCD devices are mounted on the

top surface of the carrier **24**, the drive electronics **22** associated with each of these devices will be positioned beneath the opposite, or bottom, side **26** of the carrier **24**, preferably on a printed circuit board **30** positioned effectively below the carrier **24** as shown in FIG. **2**. Cable receptables **22A** for the cables **23** are part of the drive electronics **22** positioned on the circuit board **30**.

A pair of retainer clips **31** are illustrated in FIGS. **2** and **3** and are coupled to and join together the LCD devices **20** and **21** and the carrier **24** to form a snap-together subassembly **34** which can be assembled by hand. Each retainer clip **31** has extending portions **32**, preferably comprising a number of individual extending fingers, which contact peripheral end portions **20C** and **21C** of the LCD top surfaces and bias the LCD devices toward and against the carrier **24**.

A main feature of the present invention is that the carrier **24** is a unitary molded part made of a clear light transmitting material, for example a plastic. Preferably the carrier **24** comprises a polycarbonate, rather than an acrylic, molded part wherein the preferred polycarbonate comprises Lexan. While polycarbonate is not as light-transmissive as acrylic, it is more uniform in its light-transmitting properties, and therefore is preferred.

The carrier **24** provides two wedge-shaped portions **32** and **33** which are essentially positioned beneath each of the LCD devices **20** and **21**, respectively. Each of the wedge-shaped portions of the carrier has a substantially planar top surface **32A** and **33A**, which is part of the carrier recessed top surface portions **27** and **28**, respectively. The surfaces **32A** and **33A** are effectively coplanar. The wedge planar top surfaces are positioned in effective planar surface contact with the bottom surfaces **20B** and **21B** of the LCD, respectively. In addition, the wedge portions **32** and **33** have substantially planar associated bottom surfaces **32B** and **33B** which are inclined with respect to the wedge top surfaces **32A** and **33A**, respectively, thereby providing each wedge portion with its wedge-type shape. The wedge portions **32** and **33** also each have associated major and minor generally vertically projecting end surfaces wherein the major vertical end surfaces are designated by the surfaces **32C** and **33C** and the minor vertical end surfaces have the designations **32D** and **33D**. The major and minor vertical end surfaces associated with each of the wedges extend between and are located generally at opposite ends of the top and bottom wedge surfaces. It should be noted that each of the wedge bottom surfaces **32B** and **33B** are inclined with respect to their associated wedge top surfaces **32A** and **33B**, but are oriented such that they extend upwardly with respect to the plane of the wedge top surfaces in generally opposite lateral (horizontal) directions.

As illustrated in FIG. **2**, a pair of light sources **40** and **41** are provided either on or associated with the printed circuit board **30**. After assembly, each of the light sources will be effectively positioned adjacent to an associated one of the major vertical end surfaces **32C** and **33C**. With this configuration, the carrier **24** will function not only as a locating carrier device for both of the LCD devices **20** and **21**, but will also function as a unitary light pipe device such that each of the light sources **40** and **41**, comprising electric lamps, can provide uniform backlighting of the LCD devices.

Details concerning the mounting of the retainer clips **31** on the carrier **24** will now be discussed. The carrier **24**, for each of the retainer clips **31**, has an associated pair of end guide slots **50**, **51**, each slot of each pair of slots being associated with one major or minor vertical extending end surface of one of the wedge-shaped portions of the carrier. These end guide slots cooperate with end portions **52** and **53** of each of the retainer clips **31** to assist in both properly locating the retainer clip with respect to the carrier and fixing the retainer to the carrier. As was previously noted, spring action fingers of the extending portions **31A** will be positioned so as to contact and press against peripheral portions of the LCD devices **20** and **21** so as to bias these devices downward toward the carrier **24**. In addition, vertically downwardly extending projections **54** are provided on the retainer clips **31** with each of these fingers having an inward end latching projection **55** for engaging, when the retainer clip is mounted to the carrier, a portion of the bottom surface **26** of the carrier **24**. This structure enables the present invention to provide the snap-together subassembly **34** comprising the carrier **24**, the LCD devices **20** and **21** mounted in the carrier recessed portions **27**, **28** and the pair of retainer clips **31**.

Preferably, each retainer clip **31** essentially comprises two main substantially planar extensions, one including the extending spring fingers **31A** and another including the extending projections **54**. These planar extensions are joined together and form an angle which is nominally (without providing any biasing stress to the retainer clip **31**) less than the angle provided by the junction of the carrier top surface **25** and the vertical end surfaces, such as **32C** and **33D**, at one end of the carrier **24**, to which the retainer clip **31** will be mounted. In this manner, when the retainer is inserted in the guide slots **50**, **51**, downward movement of the retainer will flex the spring fingers **31A** to provide spring bias to maintain the LCD's in the recessed portions of the carrier, and when the inward latching projections **55** at the ends of the fingers **54** contact the bottom surface **26** of the carrier **20**, the self-locking subassembly **29** is provided. This subassembly can be assembled by hand. Preferably, the retainer clip **31** comprises an unitary molded plastic part with all planar surfaces of the retainer clip **31** that are positioned adjacent the carrier **24** being light-reflective so as to minimize interference with the light pipe function of the carrier **24**.

Preferably, each of the major vertical end surfaces **32C**, and **33C** include a recessed portion **60**. Each of the light sources **40** and **41** is positioned, after assembly, within a cavity **61** bounded by this recessed portion **60** and a light-reflecting inner surface **62** of the vertically downwardly extension **54** of the retainer clip **31**. In this manner, substantially all light emitted by the light sources **40** and **41** will be directed into the wedge-shaped portions of the carrier **24** which then acts as a light pipe to provide uniform backlighting illumination for the LCD's, as well as to provide illumination for the graphics **15** provided on the display coverplate **12**.

Preferably the present invention contemplates the use of the flexible cables **23** for providing electrical connection to the LCD devices **20** and **21**. This is instead of the commonly-used "zebra" strips which comprise a solid rectangular strip of material having alternating conductor rings provided thereon. Typically these zebra strips extend in a longitudinal direction and have a relatively small cross-sectional area perpendicular to the longitudinal direction. This configuration would effectively prevent providing any wedge-shaped light pipe configuration, having an appreciable thickness, from being positioned beneath the LCD device since typically the distance spanned by the zebra strip between the LCD

device and receiving printed circuit board contacts would be relatively small. Therefore, using zebra strips would generally not provide room for a significant thickness wedge-shaped structure to be positioned beneath the LCD devices.

As illustrated in FIG. 2, preferably the actual LCD device comprises a top glass cover plate **70** having an elongated horizontal shape which is joined to an elongated bottom plate **71** which includes the actual liquid crystal material. Generally the top glass plate **70** has a minor axis horizontal dimension perpendicular to the horizontal elongated axis dimension which exceeds the corresponding minor axis horizontal dimension of the bottom plate **71**. This structure essentially forms an inverted vertical step or shoulder on the bottom surface of the LCD devices **20** and **21** wherein the recessed portions of the carrier **24** which receive the LCD devices also have a mating uninverted vertical step. This vertical step assists in properly laterally locating the LCD devices in the carrier **24**.

It should be noted that the carrier top surface **25** has four raised portions **80** which extend vertically above the horizontal top surface plane of the LCD devices **20** and **21**. The raised portions **80** comprise effective lateral extending portions of the carrier top surface **25** which are provided adjacent the recessed portions **27** and **28** of the top surface and are positioned adjacent, directly beneath, the graphics **15** to be illuminated. These raised portions can effectively contact the bottom surface of the coverplate **13** and essentially act as spacers to insure that the top surface of the LCD devices will not contact the bottom planar surface of the display coverplate **11**. In addition, these raised portions of the carrier **24**, since the carrier also functions as a light pipe, insure bright illumination of the associated graphics **15** on the coverplate **13** by insuring close positioning of the portions of the carrier **24** which provide illumination for the graphics. The raised portions **80** also form an effective wedge shape with the inclined wedge bottom surfaces to insure uniform graphic illumination. It should be noted that preferably the raised portions **80** extend vertically above the retainers clips **31** after assembly of these retainer clips to the carrier **24**. This is to insure that the raised portions of the carrier act as spacers with regard to the coverplate rather than having the retainer clips **31** act as spacers. In this manner, accurately positioning the carrier-light pipe **24** with respect to the coverplate **13** is achieved. Preferably the carrier **24** and circuit board **30** are directly mounted to the coverplate **13** by any suitable mounting mechanism. This mounting mechanism is not shown in the drawings.

As illustrated in the drawings, the carrier **24** has vertically downwardly extending mounting posts **81** each having a threaded center hole **82** therein. The posts **81** extend below the wedge portion bottom surface. A plurality of mounting screws **83** having head portions **84** and have body portions which pass through holes **85** in the printed circuit board **30** and effectively join the carrier **24** to the printed circuit board **30**. In this manner, the molded carrier **24** provides mounting posts which assist in mounting the carrier to its associated printed circuit board **30**. This eliminates the need for additional mounting structure for the display assembly of the present invention. In addition, by providing the carrier **24** as a unitary molded part, separate spacers to position the carrier with respect to the display coverplate **13** can be eliminated and additional mounting structure for mounting the carrier to an associated printed circuit board is minimized.

Referring now to FIGS. **4**, **5** and **6**, an additional embodiment of the present invention is illustrated comprising an LCD display assembly **100** which is similar to the display assembly **10** illustrated in FIGS. **1–3**. The display assembly **100** includes an LCD device **101** having a general plate-type configuration with substantially planar top and bottom surfaces **102** and **103**. The LCD device **101** selectively provides a desired visual display when the LCD device is viewed from above the planar top surface **102**.

A carrier **104** is made of light-transmitting plastic material and has top and bottom surfaces **105** and **106** with a top surface recessed portion **107** within which the LCD device is positioned. Edges **108** of the recessed portion **107** laterally surround the LCD and thereby laterally locate the LCD with respect the carrier. The carrier **104** has an integral substantially planar external surface **109** positioned beneath and inclined with respect to the LCD bottom surface **103**. The carrier planar surface **109** is laterally positioned with respect to the LCD device **101** such that the LCD bottom surface **103** vertically projects downward onto the carrier planar external surface **109**. The surface **109** forms part of the recessed portion **107**.

A coverplate **110** is coupled to the carrier **104**. A light source **111**, comprising an incandescent light bulb, provides backlighting for said LCD device, and the light source is effectively positioned adjacent the carrier **104**. The carrier **104** forms a light pipe for providing backlighting of said LCD device by the light source while also being part of a carrier structure for the LCD device. The carrier inclined planar surface **109** functions by directing light from said light source **111** towards said LCD planar bottom surface, and in this respect the surface **109** is similar in function to the wedge-shaped bottom surface **32B** for the display assembly **10** shown in FIGS. **1–3** which reflects light toward the LCD bottom surface. Obviously the bottom surface of the wedge **32** for the assembly **10** concentrates light to obtain uniform backlighting of the LCD by providing a reflective function, and the inclined surface **109** is used to disperse light towards the LCD bottom surface.

It should be noted that the carrier inclined planar surface **109** in FIGS. **4–6** is spaced apart from the LCD bottom planar surface **103** by an air gap **112**. While no such air gap is illustrated for the assembly **10** shown in FIGS. **1–3**, clearly such an air gap could be provided, if desired, for that assembly while the assembly **10** still functioned in a substantially identical manner. The providing of the air gap **112** for assembly **100** is possible because the carrier recessed portion **107** includes peripheral support ledges **113** which contact and support peripheral portions of said LCD bottom surface **103**. This allows the inclined surface **109** to directly face the LCD bottom planar surface **103** across the air gap **112**.

The assembly **100** includes a reflector surface **114** positioned to reflect light from the light source **111** so as to provide a reflected light stream parallel to the LCD bottom planar surface **103**. This reflected light stream is indicated by reference arrow **115** and is directed toward the inclined surface **109**. The surface **109** has been provided with a rough surface finish so as to provide for light dispersion of the light reflected to this surface by the reflector surface **114**. In this manner, the inclined surface **109** directs the reflected light so as to backlight the LCD.

The coverplate **110** has a bottom planar surface **110A** which is effectively positioned adjacent the top surfaces **102** and **105** of the LCD device **101** and the carrier **104**. The coverplate has an effective visual opening **110B** therein so as to permit viewing of the LCD planar top surface **102**. The coverplate also provides laterally-disposed graphics **110C** adjacent the visual opening **110B**. Lateral extending portions **105A** of the carrier top surface **105** are provided adjacent the carrier recessed portion **107** and are also provided adjacent the graphics **110C** so as to provide backlighting illumination of these graphics.

From the preceding description, it is apparent that a number of similarities and differences exist with respect to the LCD assemblies **10** and **100**. In both instances, an inclined external surface of the carrier is positioned beneath the LCD bottom surface to provide LCD backlighting wherein the carrier functions not only as a light pipe but also as a mechanical mounting structure for the LCD device. While the assembly **10** discloses one type of retaining mechanism for biasing the LCD device towards the carrier, clearly other types of retaining mechanisms could be used to perform this same function. In the display assembly **100**, a zebra strip **117** is part of a retainer means and is used to provide electrical connection to the LCD **101** and bias it against the carrier **104**. Thus the zebra strip **117** is coupled to and joins together the LCD **101** and carrier **104**. The display assembly **100** also illustrates that direct planar contact between the bottom LCD surface and a surface of the recessed portion of the carrier is not required, even though such planar contact was found to produce a brighter backlighting effect for the assembly **10**. In addition, the display assembly **100** illustrates that the use of a reflector surface **114** can result in the "effective" positioning of the light source in an appropriate location. Also, it can be seen in FIG. **6** that additional sections **115** of the light carrier **104** can be used to concentrate light and direct it toward a thicker area **116** of the recessed portion of the light pipe. This means that the light source or reflector does not have to be directly adjacent to an external vertical major end surface of the recessed portion, but that light may just be directed to an effective internal major vertically projecting end surface of the recessed portion. This could also be the case with the display **10** wherein the major vertical end surface of the wedge could be an internal, rather than external, end surface.

In each of the embodiments **10** and **100**, an inclined external surface of the carrier recessed portion is positioned beneath the LCD display. In the display **10**, this inclined surface comprises the bottom surface of the wedge and results in reflecting light towards the LCD planar bottom surface. In display assembly **100**, the inclined surface, by virtue of the exterior rough finish, results in directing light from the light source towards the LCD planar bottom surface, wherein this language also, in general, describes the operation of the display assembly **10**. While the assembly **10** provides for a uniform backlighting of an LCD device, the assembly **100** also provides for LCD backlighting from a light source. While assembly **10** provides more uniform backlighting, assembly **100** provides more light uniformity across the LCD than would be obtainable without providing an inclined surface beneath the LCD unless a substantially more complex backlighting structure were utilized.

While specific embodiments of the present invention have been shown and described, further modifications and improvements will occur to those skilled in the art. All such modifications which retain the basic underlying principles disclosed and claimed herein are within the scope of this invention.

We claim:

1. An LCD display assembly comprising:

at least one LCD device having a general plate-type configuration with substantially planar top and bottom surfaces, said LCD device selectively providing a desired visual display when said LCD device is viewed from above said planar top surface;

a carrier having top and bottom surfaces, said carrier top surface having a recessed portion within which said LCD device is positioned, edges of said carrier recessed portion laterally surrounding said LCD device and thereby laterally locating said LCD device with respect to said carrier;

retainer means coupled to and joining together said LCD device and said carrier, said retainer means having extending portions which contact peripheral portions of said LCD planar top surface and bias said LCD device against said carrier; and

a light source for providing lighting for said LCD device;

wherein the improvement comprises,

said carrier being made of light transmitting material, said carrier having a generally wedge-shaped portion that has a substantially planar top surface, which is part of said carrier top surface recessed portion, positioned in effective planar surface contact with said LCD planar bottom surface, said wedge shaped portion having a substantially planar bottom surface inclined with respect to said wedge-shaped portion planar top surface, said wedge shaped portion having effective major and minor generally vertically projecting end surfaces between and located generally at opposite ends of said wedge-shaped portion planar top and bottom surfaces;

said light source effectively positioned adjacent said major vertical end surface of said wedge portion, said wedge shaped portion forming a light pipe for obtaining uniform backlighting of said LCD device by said light source while also providing a carrier structure for said LCD device.

2. A display assembly according to claim **1** which includes a coverplate having a planar bottom surface effectively positioned adjacent the top surface of said LCD device and said carrier, said coverplate providing at least one effective visual opening to permit viewing of said LCD planar top surface and also providing laterally disposed graphics adjacent said visual opening, lateral extending portions of said carrier top surface are provided adjacent said carrier top surface recessed portion are positioned adjacent said graphics so as to provide backlighting illumination of said graphics.

3. A display assembly according to claim **2** wherein said lateral extending portions of said carrier top surface comprise effective lateral extensions of said wedge shaped portion planar top surface which also form an effective wedge shape with said wedge-shaped portion planar bottom surface so as to provide uniform illumination for said graphics.

4. A display assembly according to claim **3** wherein said lateral extending portions of said carrier top surface have portions raised above the plane of the top surface of said LCD device so as to effectively recess the LCD

device beneath the plane of said coverplate planar bottom surface and thereby protect said LCD device.

5. A display assembly according to claim 4 wherein said raised portion of said lateral extending portions of said carrier top surface effectively contact portions of a bottom surface of said coverplate, which includes said coverplate planar bottom surface, so as to accurately position said carrier with respect to the coverplate.

6. A display assembly according to claim 1 wherein said retainer means has extending latching projections which, after assembly, contact said carrier and provide a snap-together subassembly, capable of assembly by hand, comprising at least said LCD device, said carrier and said retainer means.

7. A display assembly according to claim 6 wherein said retainer means extending latching projections contact the bottom surface of said carrier while said retainer means extending portions contact said LCD device peripheral portions.

8. A display assembly according to claim 7 wherein said carrier has end guide slots provided in said carrier which receive end portions of said retainer means and assist in locating said retainer with respect to said carrier.

9. A display assembly according to olaim 8 wherein said retainer means comprises at least one plastic molded part generally comprising two main substantially planar extensions joined together and thereby forming an angle which is nominally less than the angle of carrier edge surfaces that will effectively planarly mate with portions of the retainer means two main planar extensions.

10. A display assembly according to claim 9 wherein said retainer means includes a pair of said plastic molded parts, each positioned for contacting an associated one of two opposite ends of said LCD planar top surface.

11. A display assembly according to claim 9 wherein one of said retainer means main planar extensions effectively forms a light source receiving cavity with a recessed portion of said carrier provided as part of said wedge-shaped portion major vertical projecting end surface.

12. A display assembly according to claim 11 wherein a surface of said main planar extension of said retainer means that faces said major vertical projecting end surface of said wedge-shaped portion effectively comprises light-reflective material so as to direct light from said light source into said wedge-shaped portion.

13. A display assembly according to claim 12 wherein one of said two main substantially planar extensions of said retainer means which, includes said retainer means extending portions which contact said LCD device, has a surface of light reflective material positioned adjacent said carrier top surface.

14. A display assembly according to claim 1 which includes at least a pair of said LCD devices and a pair of said wedge-shaped portions each wedge-shaped portion having planar top surface portions positioned adjacent and aligned substantially coplanar with respect to one another, one of said pair of said LCD devices being associated with and mounted to each of said wedge-shaped portions as recited in claim 1.

15. A display assembly according to claim 14 wherein bottom surfaces of each of said pair of wedge-shaped portions are inclined with respect to their associated wedge-shaped top surfaces, but are oriented such that they extend upwardly with respect to the plane of said wedge-shaped top surfaces, in generally opposite lateral directions and wherein each of said wedge-shaped portions thereby has its major vertical projecting end surface located at opposite ends of said carrier, and wherein a separate one of said light sources is effectively positioned adjacent to each of said major vertical projecting end surfaces of said wedge-shaped portions.

16. A display assembly according to claim 15 wherein said retainer means comprises a pair of separate retainer members each having extending portions which contact peripheral end portions of each of said LCD planar top surfaces, each of said retainer members positioned adjacent opposite vertical end surfaces of said carrier.

17. A display assembly according to claim 1 which includes drive electronics for the LCD device positioned below the wedge-shaped portion planar bottom surface, the drive electronics coupled to said LCD device by flexible flat printed circuit cable passing through an elongated slot in said carrier.

18. A display assembly according to claim 1 wherein said carrier has threaded mounting posts extending below said wedge-shaped portion planar bottom surface and wherein the assembly includes a printed circuit board and mounting screws, said mounting screws mating with said mounting posts and attaching said carrier to said printed circuit board.

19. An LCD display assembly comprising:

at least one LCD device having a general plate-type configuration with substantially planar top and bottom surfaces, said LCD device selectively providing a desired visual display when said LCD device is viewed from above said planar top surface;

a carrier having top and bottom surfaces, said carrier top surface having a recessed portion within which said LCD device is positioned, edges of said carrier recessed portion laterally surrounding said LCD device and thereby laterally locating said LCD device with respect to said carrier;

retainer means coupled to and joining together said LCD device and said carrier; and

a light source for providing lighting for said LCD device;

wherein the improvement comprises:

said carrier being made of light transmitting material, said carrier having an integral generally wedge-shaped portion that has a substantially planar top surface, which is part of said carrier top surface recessed portion, positioned beneath and facing said LCD bottom surface, said wedge-shaped portion having a substantially planar bottom surface inclined with respect to said wedge-shaped portion planar top surface, said wedge-shaped portion having effective major and minor generally vertically projecting end surfaces between and located generally at opposite ends of said wedge-shaped portion planar top and bottom surfaces;

said light source effectively positioned adjacent said major vertical end surface of said wedge-shaped portion, said wedge-shaped portion forming a light pipe for obtaining uniform backlighting of said LCD device by said light source while also being part of a carrier structure for said LCD device.

20. An LCD display assembly comprising:

at least one LCD device having a general plate-type configuration with substantially planar top and bottom surfaces, said LCD device selectively providing a desired visual display when said LCD

device is viewed from above said planar top surface;

a carrier having top and bottom surfaces, said carrier top surface having a recessed portion within which said LCD device is positioned, edges of said carrier recessed portion laterally surrounding said LCD device and thereby laterally locating said LCD device with respect to said carrier;

retainer means coupled to and joining together said LCD device and said carrier; and

a light source for providing lighting for said LCD device;

wherein the improvement comprises:

said carrier being made of light transmitting material, said carrier having an integral substantially planar external surface, positioned beneath and inclined with respect to said LCD planar bottom surface, said carrier inclined external surface laterally positioned such that LCD planar bottom surface vertically projects onto said carrier planar external surface;

said light source effectively positioned adjacent said carrier which forms a light pipe for obtaining backlighting of said LCD device by said light source while also providing a carrier structure for said LCD device, said carrier inclined planar external surface directing light from said light source toward said LCD planar bottom surface.

21. A display assembly according to claim **20** wherein said carrier inclined planar external surface is spaced apart from said LCD planar bottom surface by an air gap.

22. A display assembly according to claim **21** wherein said carrier inclined planar external surface directly faces said LCD planar bottom surface across said air gap.

23. A display assembly according to claim **22** wherein said carrier recessed portion has peripheral support ledges which contact and support peripheral portions of said LCD planar bottom surface.

24. A display assembly according to claim **20** wherein said carrier inclined planar surface has a rough surface finish to provide light dispersion.

25. A display assembly according to claim **24** which includes a reflector surface positioned to reflect light from said light source parallel to said LCD planar bottom surface, said reflected light being directed toward said carrier inclined planar external surface.

26. A display assembly according to claim **20** wherein said retainer means includes a coverplate having a planar bottom surface effectively positioned adjacent the top surfaces of said LCD device and said carrier, said coverplate providing at least one effective visual opening to permit viewing of said LCD planar top surface and also providing laterally-disposed graphics adjacent said visual opening, lateral extending portions of said carrier top surface are provided adjacent said carrier top surface recessed portion and are positioned adjacent said graphics so as to provide backlighting illumination of said laterally-disposed graphics.

* * * * *