US00D827831S

(12) United States Design Patent

Fong et al.

(10) Patent No.: US D827,831 S
(45) Date of Patent: ** Sep. 4, 2018

(54) **HEALTH MONITORING WRIST WEARABLE**

(71) Applicant: **Verily Life Sciences LLC**, Mountain View, CA (US)

(72) Inventors: **Shannon C. Fong**, San Francisco, CA (US); **John Lapetina**, Los Altos Hills, CA (US); **Michael Jastrzebski**, Newark, CA (US)

(73) Assignee: **Verily Life Sciences LLC**, Mountain View, CA (US)

(**) Term: **15 Years**

(21) Appl. No.: **29/599,502**

(22) Filed: **Apr. 4, 2017**

(51) **LOC (11) Cl.** **24-01**

(52) **U.S. Cl.**
USPC **D24/167**; D10/70; D10/78; D10/97; D10/98; D10/30; D14/344; D24/186

(58) **Field of Classification Search**
USPC ..... D10/30–39, 65, 70, 78, 97, 98; D14/138 R, 203.5, 203.6, 341, 344, 347; D24/167, 168, 186
CPC G04B 19/00–19/34; G04B 21/12; G04B 23/12; G04B 37/00–37/228; G04B 47/00–47/068; G01C 17/00; G01C 21/00–21/3697; G01C 22/00–22/025; G01C 23/00–23/005; G06F 19/3481; G06F 3/00–3/027; G01P 1/00–1/26; G01P 15/00–15/18; A63B 24/00–2024/0096; A63B 2213/00; A63B 69/0028; A63B 2071/0658–2071/0666; A63B 2220/00–2220/89; A63B 2225/02; A61B 5/681; A61B 5/6824; A61B 5/6825; A61B 5/6826
See application file for complete search history.

(56) **References Cited**

U.S. PATENT DOCUMENTS

D767,566 S * 9/2016 Morgenroth D14/344
D794,631 S * 8/2017 Solomon D10/38
D805,406 S * 12/2017 Register D10/30
D806,581 S * 1/2018 Register D10/30

* cited by examiner

Primary Examiner — Antoine Duval Davis
(74) *Attorney, Agent, or Firm* — Christensen O'Connor Johnson Kindness PLLC

(57) **CLAIM**

We claim the ornamental design of a health monitoring wrist wearable, as shown and described.

DESCRIPTION

FIG. **1** is a front right perspective view of a health monitoring wrist wearable in accordance with an embodiment;
FIG. **2** is a rear left perspective view thereof;
FIG. **3** is a front elevation view thereof;
FIG. **4** is a rear elevation view thereof;
FIG. **5** is a left side elevation view thereof;
FIG. **6** is a right side elevation view thereof;
FIG. **7** is a top plan view thereof; and,
FIG. **8** is a bottom plan view thereof.
All portions of the drawings shown in dashed lines are for illustrative purposes only and form no part of the claimed design.

1 Claim, 3 Drawing Sheets

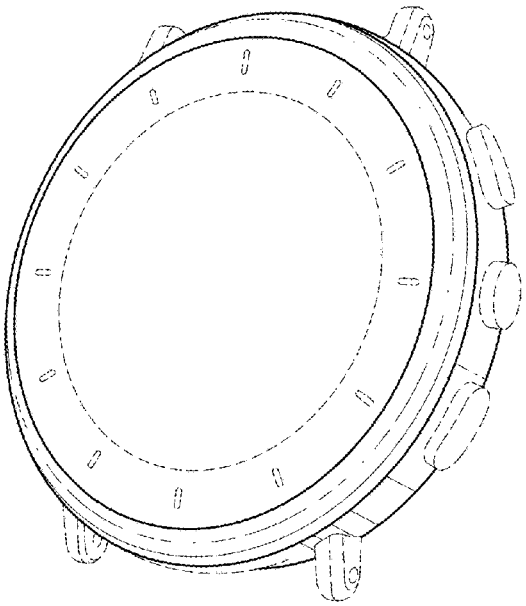

Masimo Ex. 1008
IPR Petition - US D962,936

FIG. 1

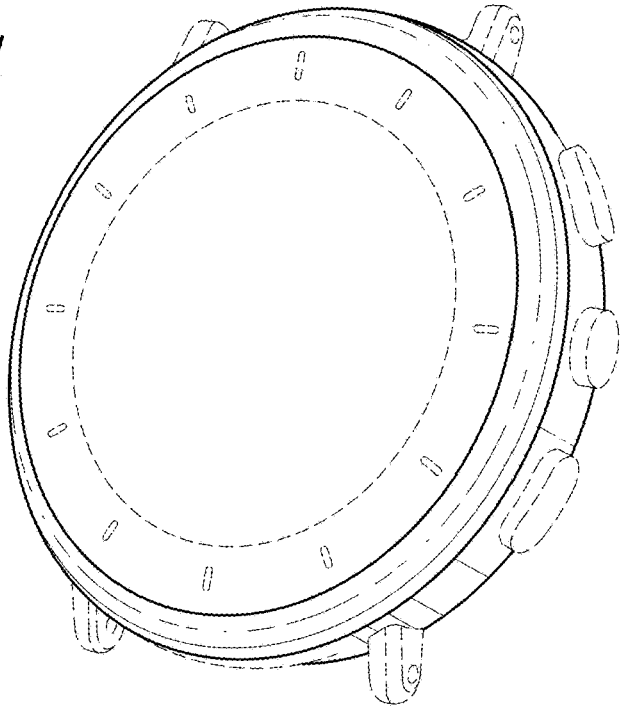

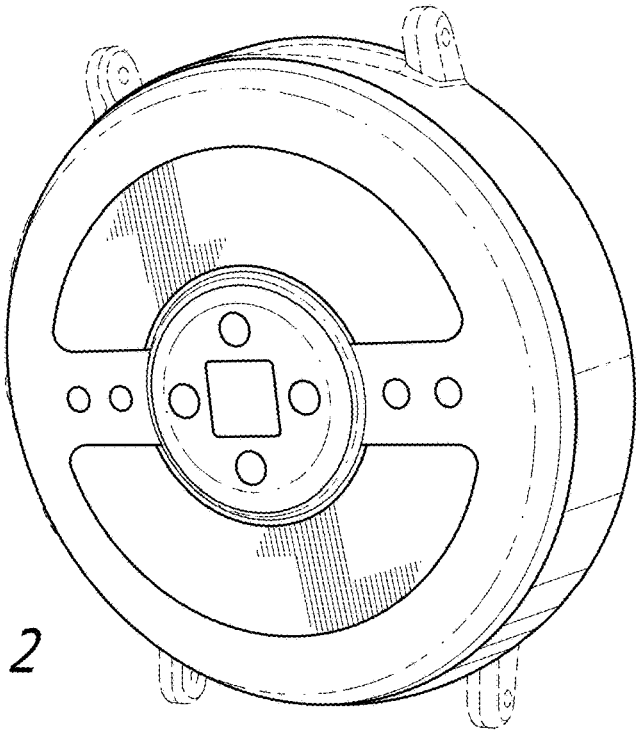

FIG. 2

FIG. 3

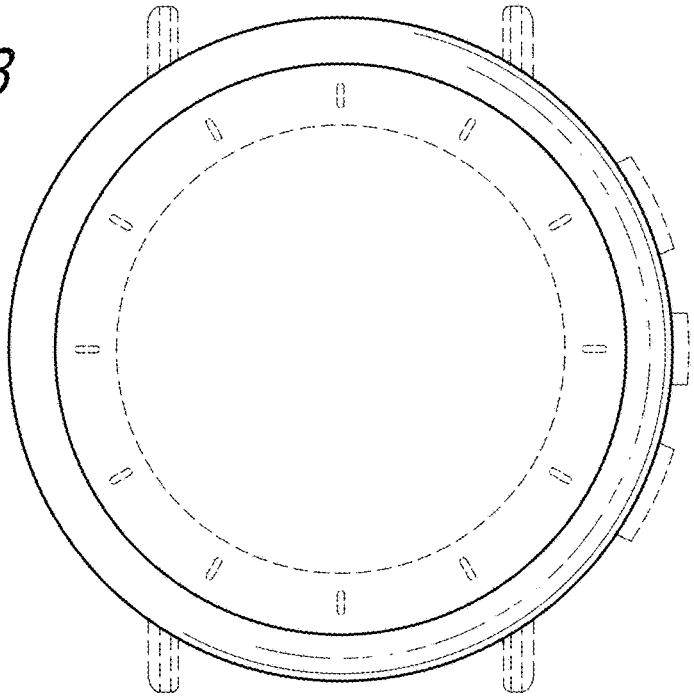

FIG. 4

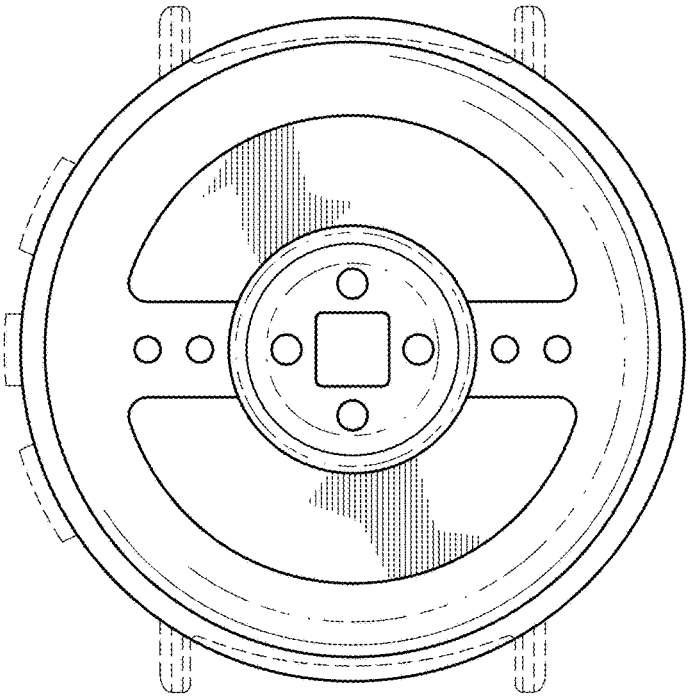

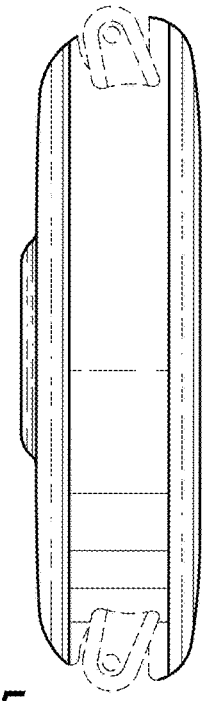

FIG. 5

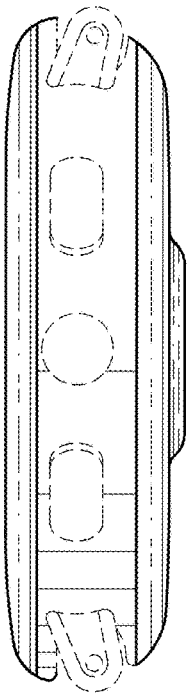

FIG. 6

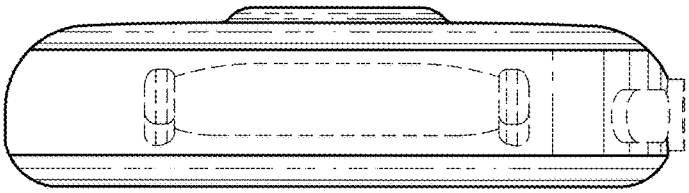

FIG. 7

FIG. 8

Masimo Ex. 1008
IPR Petition - US D962,936