US 20170086743A1

(19) United States

(12) Patent Application Publication

Bushnell et al.

(10) Pub. No.: US 2017/0086743 A1

(43) Pub. Date: Mar. 30, 2017

(54) **SENSING CONTACT FORCE RELATED TO USER WEARING AN ELECTRONIC DEVICE**

(71) Applicant: **Apple Inc.**, Cupertino, CA (US)

(72) Inventors: **Tyler S. Bushnell**, Cupertino, CA (US); **Steven J. Martisauskas**, Cupertino, CA (US); **Erik G. de Jong**, Cupertino, CA (US); **Andrzej T. Baranski**, Cupertino, CA (US); **Serhan O. Isikman**, Cupertino, CA (US); **Steven J. Banaska**, Cupertino, CA (US); **Todd K. Whitehurst**, Cupertino, CA (US); **Ming L. Sartee**, Morro Bay, CA (US)

(21) Appl. No.: **14/867,311**

(22) Filed: **Sep. 28, 2015**

Publication Classification

(51) **Int. Cl.**

A61B 5/00	(2006.01)
A61B 5/022	(2006.01)
A61B 5/0205	(2006.01)
G01L 1/22	(2006.01)
G01L 1/14	(2006.01)

(52) **U.S. Cl.**

CPC ***A61B 5/6843*** (2013.01); ***G01L 1/22*** (2013.01); ***G01L 1/142*** (2013.01); ***A61B 5/0205*** (2013.01); ***A61B 5/02241*** (2013.01); ***A61B 5/443*** (2013.01); ***A61B 5/4872*** (2013.01); ***A61B 5/681*** (2013.01)

(57) **ABSTRACT**

A wearable electronic device includes a body, a housing component, a band operable to attach the body to a body part of a user, and a force sensor coupled to the housing component. The force sensor is operable to produce a force signal based on a force exerted between the body part of the user and the housing component. A processing unit of the wearable electronic device receives the force signal from the force sensor and determines the force exerted on the housing component based thereon. The processing unit may use that force to determine a tightness of the band, determine health information for the user, adjust determined force exerted on a cover glass, and/or to perform various other actions.

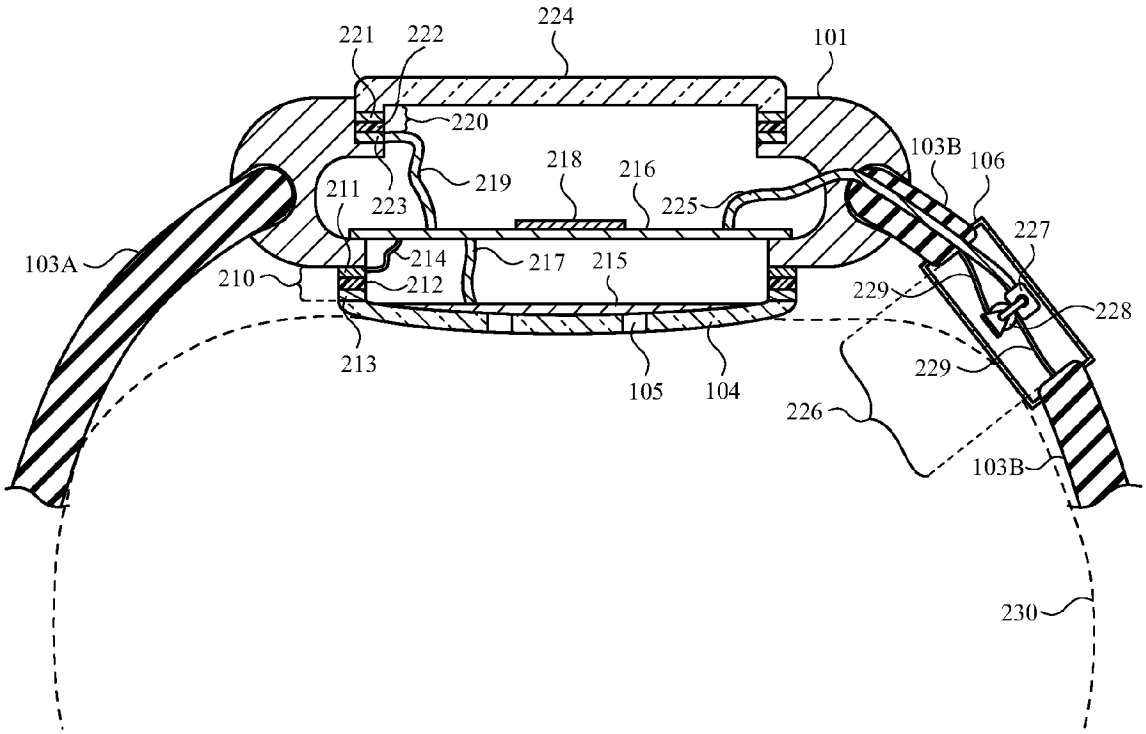

Masimo Ex. 1009
IPR Petition - US D962,936

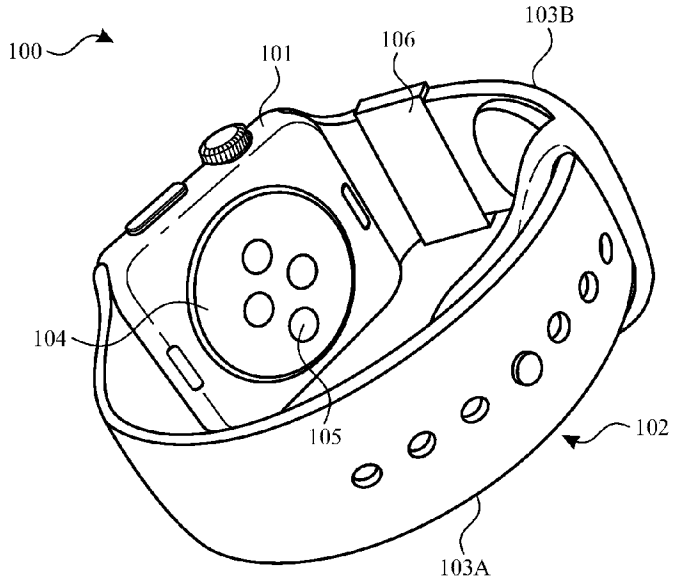

FIG. 1A

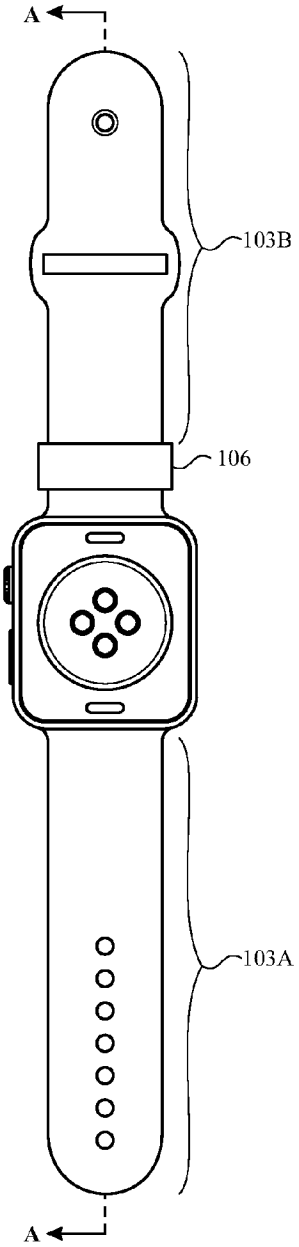

FIG. 1B

Masimo Ex. 1009
IPR Petition - US D962,936

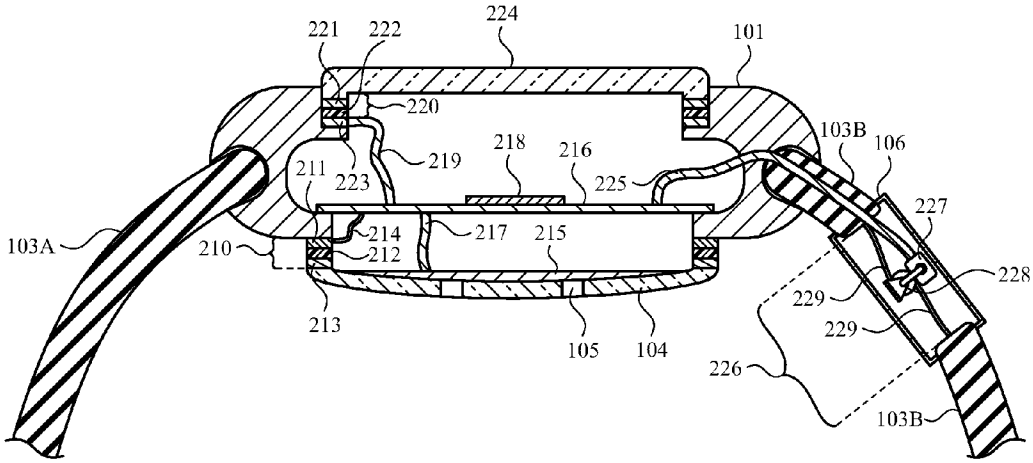

FIG. 2A

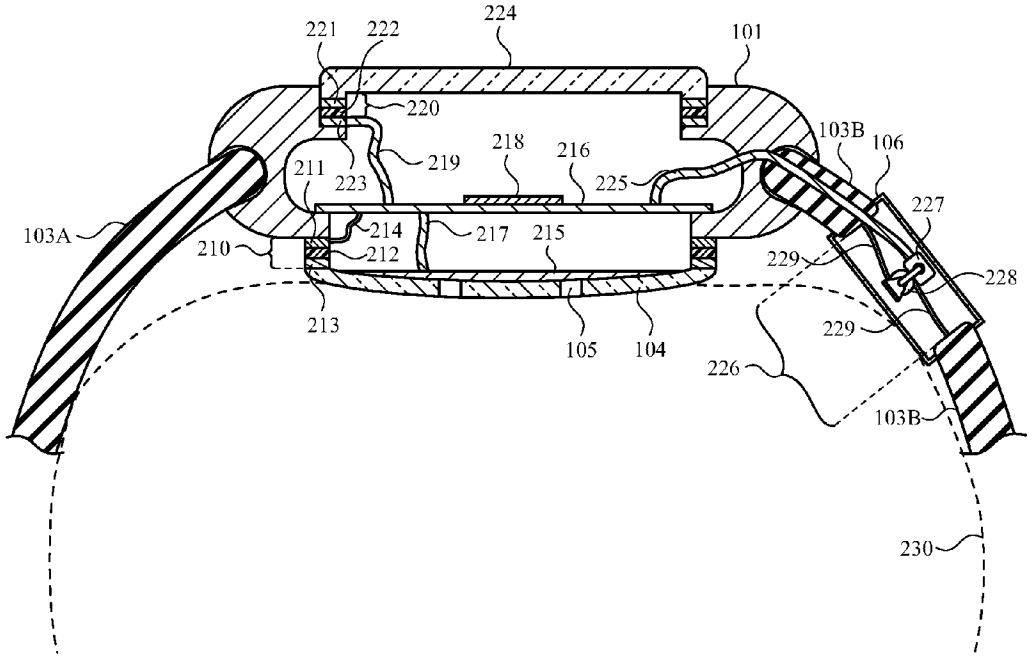

FIG. 2B

Masimo Ex. 1009
IPR Petition - US D962,936

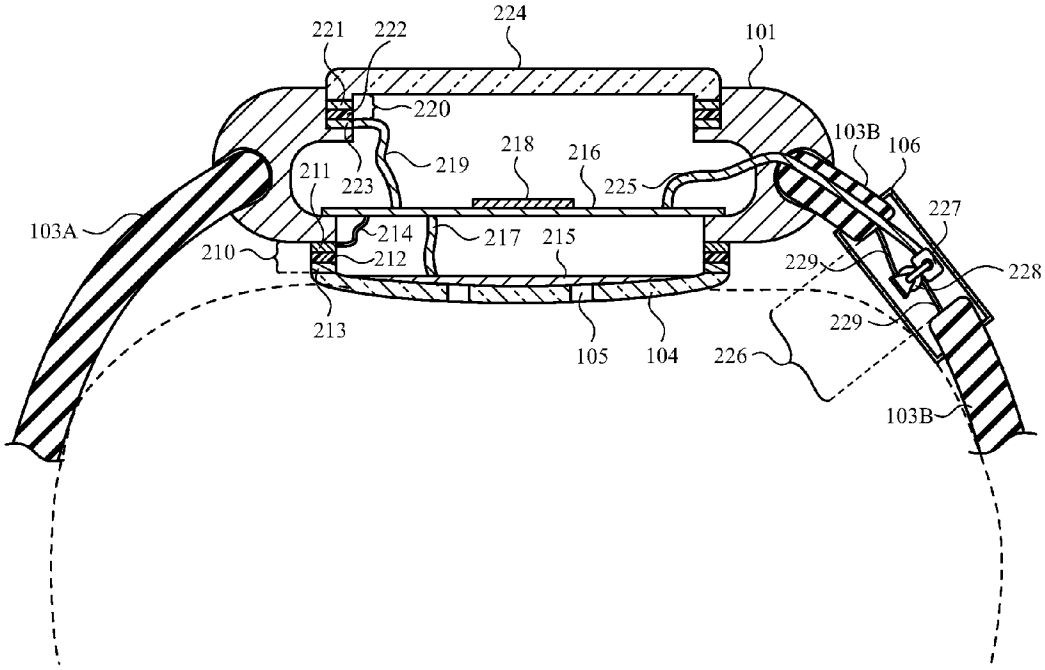

FIG. 2C

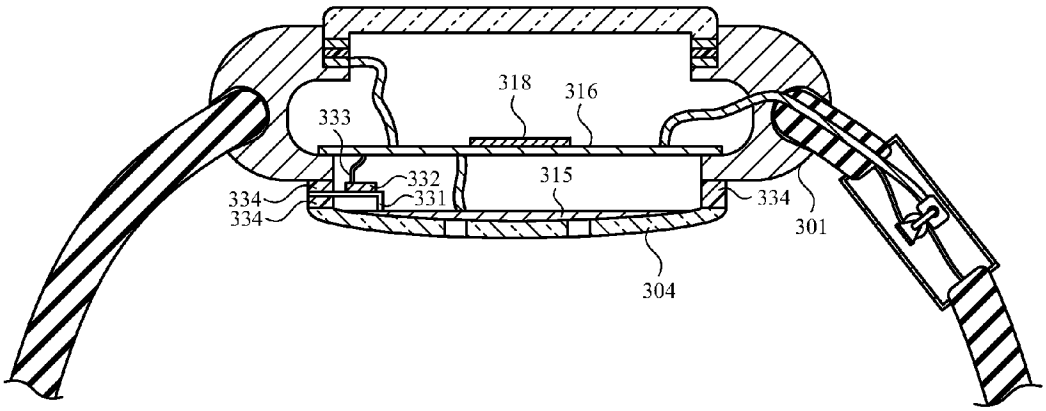

FIG. 3

Masimo Ex. 1009
IPR Petition - US D962,936

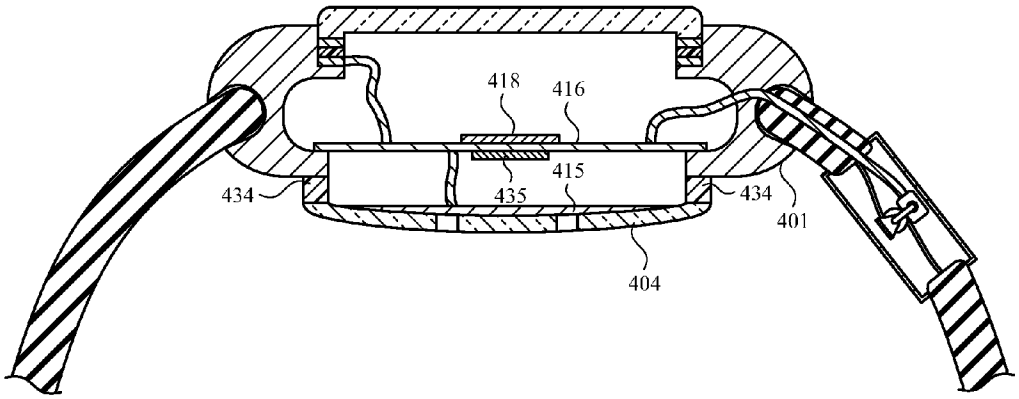

FIG. 4

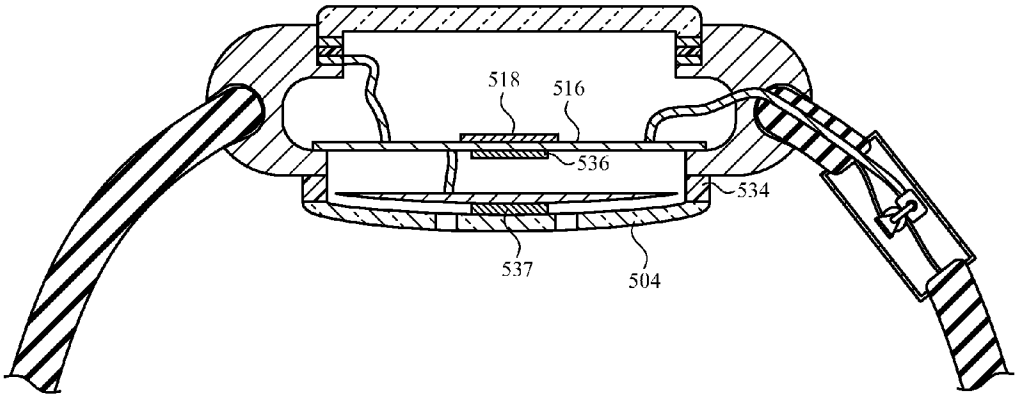

FIG. 5

Masimo Ex. 1009
IPR Petition - US D962,936

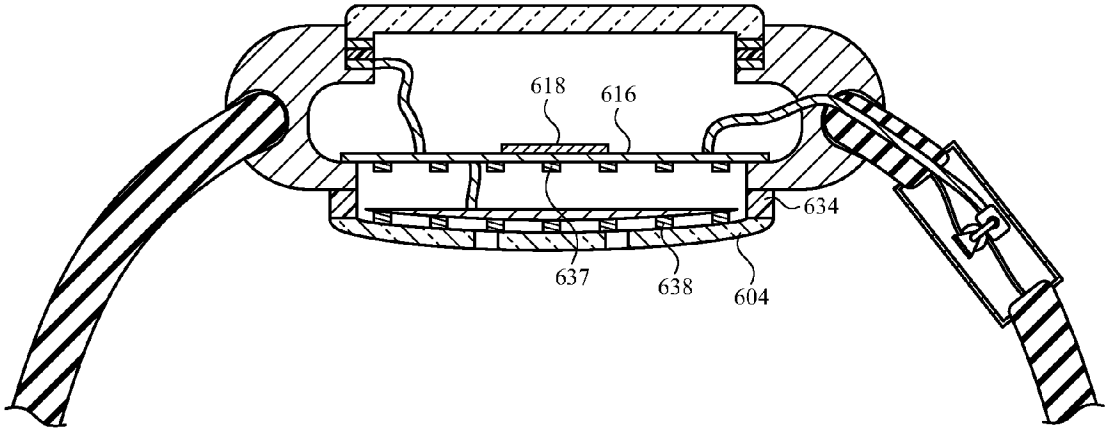

FIG. 6

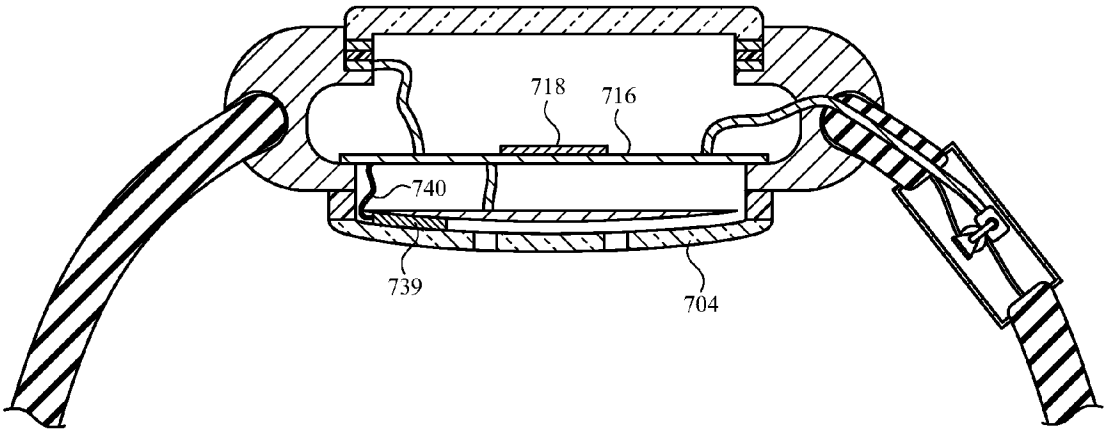

FIG. 7

Masimo Ex. 1009
IPR Petition - US D962,936

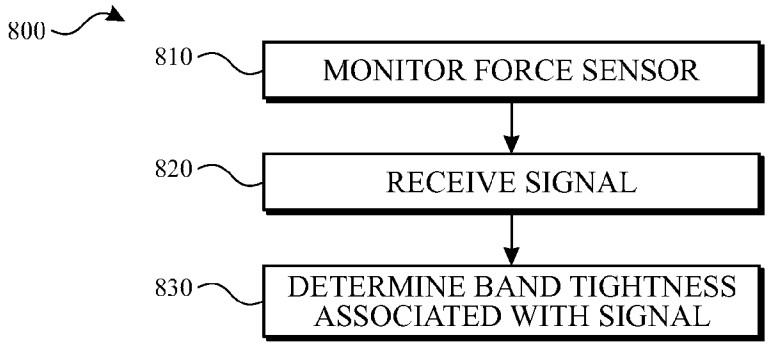

FIG. 8

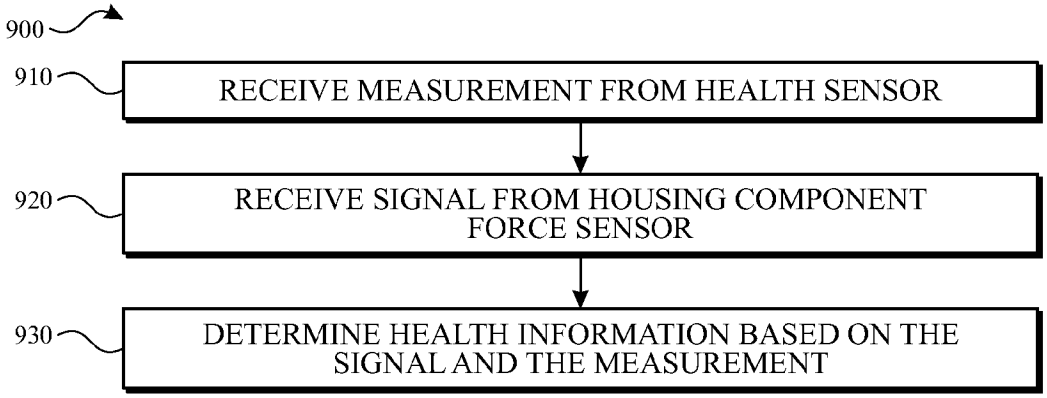

FIG. 9

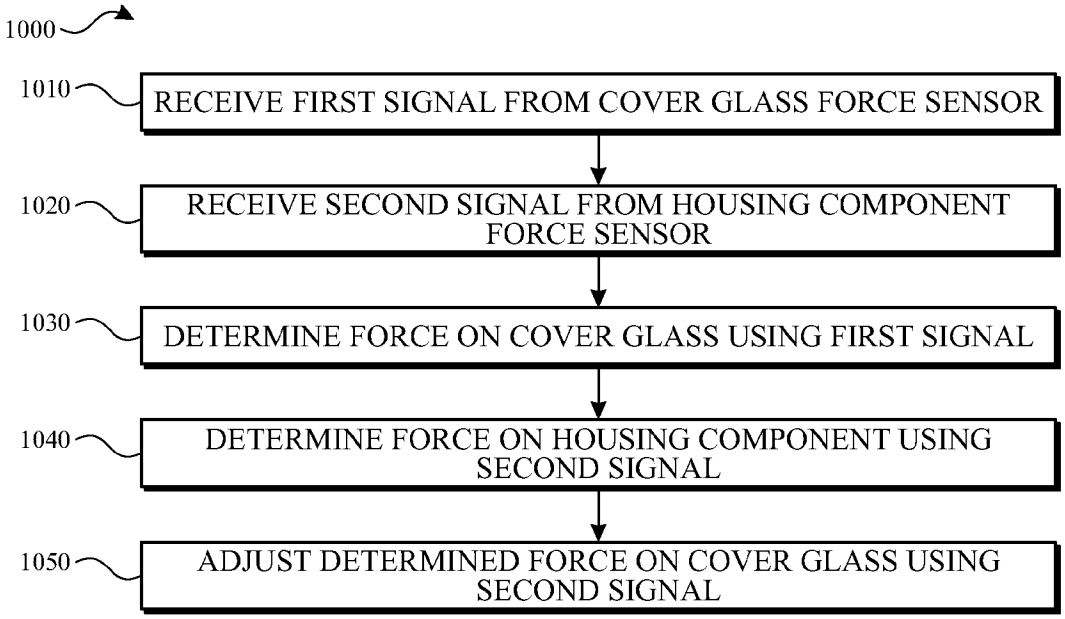

FIG. 10

Masimo Ex. 1009
IPR Petition - US D962,936

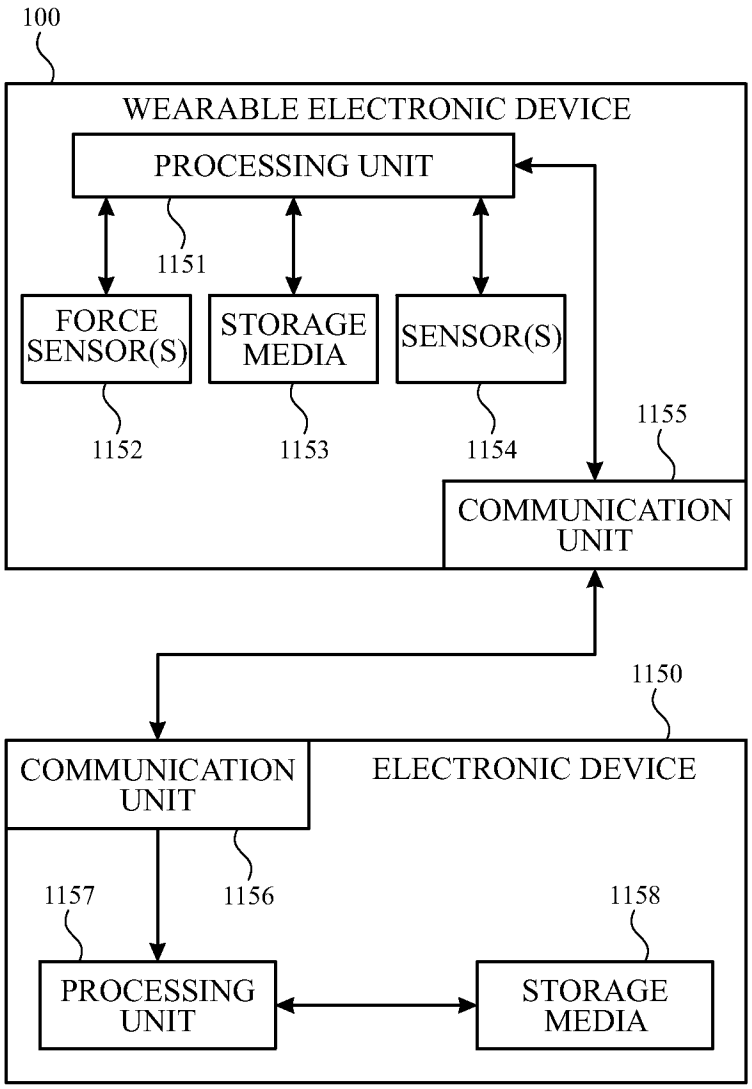

FIG. 11

Masimo Ex. 1009
IPR Petition - US D962,936

SENSING CONTACT FORCE RELATED TO USER WEARING AN ELECTRONIC DEVICE

FIELD

[0001] The described embodiments relate generally to wearable electronic devices. More particularly, the present embodiments relate to sensing the force applied to a wearable electronic device by a user's body part when a user is wearing the wearable electronic device.

BACKGROUND

[0002] Users frequently encounter a variety of different electronic devices in the modern world. Such electronic devices include computers, media players, entertainment systems, displays, communication systems, and so on. Many electronic devices, such as laptop computers, tablet computers, and smart phones, may be portable.

[0003] Some electronic devices, referred to as "wearable electronic devices," may be configured to be worn by a user. In some cases, such a wearable electronic device may include one or more bands, straps, or other attachment mechanisms that may be used to attach the wearable electronic device to a user's body part. For example, a wrist worn wearable electronic device may include a band that can be used to secure the wearable electronic device to a user's wrist.

[0004] Wearable electronic devices may include a variety of components. For example, wearable electronic devices may include input devices that a user can manipulate by touch. By way of another example, wearable electronic devices may include various sensors, such as sensors that may be used to detect information about the user.

SUMMARY

[0005] The present disclosure relates to wearable electronic devices that sense the force applied to the wearable electronic device by a user's body part when the user is wearing the wearable electronic device. The wearable electronic device may include a body, a housing component, and a band or other attachment mechanism operable to attach the body to the body part of a user. A force sensor may be positioned between the housing component and the body that produces force signals based on a force exerted between the user's body part and the housing component. A processing unit may receive the force signals and process them to perform various actions.

[0006] In various embodiments, a wearable electronic device includes a body, a housing component coupled to the body, a band operable to attach the body to a body part of a user, a force sensor coupled to the housing component that is operable to produce a force signal based on a force exerted between the body part of the user and the housing component, and a processing unit communicably coupled to the force sensor. The processing unit may be operable to determine a tightness of the band based on the force signal received from the force sensor.

[0007] In some examples, the force sensor may be a strain gauge mounted to a deflection element that is connected to the body and the housing component. In such an example, the force signal may indicate deflection of the deflection element based on strain data detected by the strain gauge.

[0008] In various examples, the force sensor may be a gasket positioned between the body of the wearable electronic device and the housing component. The gasket may include a pair of electrodes separated by a deformable material. In such an example, the force signal may indicate a capacitance between the pair of electrodes. The pair of electrodes may form a capacitor and the force signal may represent a capacitance of the capacitor.

[0009] In one or more examples, the force sensor may include an electrode. In such an example, the force signal may indicate a capacitance between the electrode and the body part of the user. The electrode and the body part of the user may form a capacitor and the force signal may represent a capacitance of the capacitor. The electrode may be coupled to one of the housing component, the body, or a circuit board coupled to the body. In some embodiments, the electrode may be formed of indium tin oxide, nanostructures, nanomesh, nanowires, a conductive film, and so on.

[0010] In some examples, the wearable electronic device may further include a circuit board coupled to the body, and the force sensor may include a first electrode coupled to the housing component and a second electrode coupled to the circuit board. In such an example, the force signal received from the first and second electrodes may indicate a capacitance between the first electrode and the second electrode. In various cases of such an example, the first electrode may be a first set of electrodes and the second electrode may be a second set of electrodes. In some cases of this example the housing component may be flexible.

[0011] In some embodiments, a wearable electronic device may include a body, a surface component coupled to the body, a health sensor coupled to the body, a force sensor coupled to the surface component, and a processing unit communicably coupled to the force sensor. The surface component may be positioned adjacent to a body part of a user when the wearable electronic device is worn. The health sensor may be operable to obtain a measurement of the body part of the user. The force sensor may be operable to produce a force signal based on a force exerted between the body part of the user and the surface component. The processing unit may be operable to determine health information for the user based on the force signal received from the force sensor and the measurement obtained by the health sensor.

[0012] In one or more examples, the health information may include at least one of a swelling indication, a blood pressure, a body fat indication, an allergic reaction indication, a hydration indication, or an edema indication.

[0013] In various examples, the processing unit may determine whether the measurement obtained by the health sensor is accurate based on the force signal.

[0014] In some examples, the wearable electronic device may include a band operable to attach the body to the body part of the user. In such examples, the processing unit may determine a tightness of the band based on the force signal. If the tightness of the band is within a range of force values, the processing unit may determine the measurement obtained by the health sensor is accurate. If the tightness of the band is outside the range of force values, the processing unit may determine the measurement obtained by the health sensor is inaccurate.

[0015] In various examples, the wearable electronic device may further include a band operable to attach the body to the body part of the user and a band tightness adjustment mechanism. In such an example, the processing unit may determine a tightness of the band based on the force signal received from the force sensor and cause the

Masimo Ex. 1009
IPR Petition - US D962,936

tightness of the band to be altered using the band tightness adjustment mechanism. In various cases, the processing unit may provide a notification to the user by causing the tightness of the band to be altered.

[0016] In one or more embodiments, a wearable electronic device may include a body, a cover glass coupled to the body, a plate coupled to the body, a first force sensor coupled to the cover glass, a second force sensor coupled to the plate, and a processing unit communicably coupled to the first and second force sensors. The plate may be positioned adjacent to a body part of a user when the wearable electronic device is worn. The first force sensor may be operable to produce a first force signal based on a first force exerted on the cover glass. The second force sensor may be operable to produce a second force signal based on a second force exerted between the body part of the user and the plate. The processing unit may be operable to determine an amount of the first force based on the first force signal, determine an amount of the second force based on the second force signal, and adjust the amount of the first force based on the second force signal.

[0017] In various examples, the processing unit may be further operable to adjust the amount of the second force based on the first force signal. For example, the first force exerted on the cover glass may cause additional force to be exerted between the body part of the user and the plate. In order to determine the second force exerted between the body part of the user and the plate without the additional force being exerted due to the first force exerted on the cover glass, the amount of the second force may be adjusted based on the first force signal to remove the influence of the first force.

[0018] In some examples, the processing unit may be further operable to determine a pressure to which the body is exposed based on the first force signal received from the first force sensor and the second force signal received from the second force sensor, such as a water pressure.

[0019] In one or more examples, the processing unit may determine whether the wearable electronic device is worn by the user based on the second force signal received from the second force sensor.

BRIEF DESCRIPTION OF THE DRAWINGS

[0020] The disclosure will be readily understood by the following detailed description in conjunction with the accompanying drawings, wherein like reference numerals designate like structural elements, and in which:

[0021] FIG. **1**A shows a wearable electronic device that may sense the force exerted by a body part of a user on the wearable electronic device when the user is wearing the wearable electronic device.

[0022] FIG. **1**B shows the wearable electronic device of FIG. **1**A from the back with the band opened.

[0023] FIG. **2**A shows an example cross-sectional view of the wearable electronic device of FIG. **1**B, taken along line A-A of FIG. **1**B.

[0024] FIG. **2**B shows the wearable electronic device of FIG. **2**A on a user's body part.

[0025] FIG. **2**C shows the wearable electronic device of FIG. **2**B after tightening of the band.

[0026] FIGS. **3**-**7** show additional examples of the wearable electronic device of FIG. **2**A in accordance with further embodiments.

[0027] FIG. **8** shows a flow chart illustrating an example method for determining band tightness. This method may be performed by one or more of the wearable electronic devices of FIGS. **1**A-**7**.

[0028] FIG. **9** shows a flow chart illustrating an example method for determining health information using a health sensor and a force sensor. This method may be performed by one or more of the wearable electronic devices of FIGS. **1**A-**7**.

[0029] FIG. **10** shows a flow chart illustrating an example method for adjusting detected force determinations. This method may be performed by one or more of the wearable electronic devices of FIGS. **1**A-**7**.

[0030] FIG. **11** shows a block diagram illustrating example components that may be utilized in the wearable electronic device and example functional relationships of those components.

DETAILED DESCRIPTION

[0031] Reference will now be made in detail to representative embodiments illustrated in the accompanying drawings. It should be understood that the following descriptions are not intended to limit the embodiments to one preferred embodiment. To the contrary, it is intended to cover alternatives, modifications, and equivalents as can be included within the spirit and scope of the described embodiments as defined by the appended claims.

[0032] The description that follows includes sample systems, methods, and apparatuses that embody various elements of the present disclosure. However, it should be understood that the described disclosure may be practiced in a variety of forms in addition to those described herein.

[0033] The following disclosure relates to wearable electronic devices operable to sense the force applied to the wearable electronic device by body part of a user when the user is wearing the wearable electronic device. The wearable electronic device may include a body, a housing component (such as a plate, a curved plate, or other surface component), and a band or other attachment mechanism operable to attach the body to the body part of a user. A force sensor may be positioned between the housing component and the body such that it produces force signals based on a force exerted between the user's body part and the housing component. A processing unit may receive the force signals and process them to perform various actions.

[0034] For example, the processing unit may process the force signals to determine a tightness of the band, such as for automatic band adjustment. By way of another example, the processing unit may use the force signals to determine health information for the user, such as in combination with measurements of the body part obtained via a health sensor included in the body. By way of still another example, the body may include an input mechanism (such as a touch surface including a cover glass) that interprets the force of a user's touch as input and the processing unit may use the force signals and signals from the input mechanism to adjust determinations of force applied to the housing component or input mechanism. Various uses for the force signals from the force sensor are possible and contemplated.

[0035] These and other embodiments are discussed below with reference to FIGS. **1**A-**11**. However, those skilled in the art will readily appreciate that the detailed description given herein with respect to these Figures is for explanatory purposes only and should not be construed as limiting.

Masimo Ex. 1009
IPR Petition - US D962,936

[0036] FIG. **1**A shows a wearable electronic device **100** that may sense the force applied to the wearable electronic device **100** when the user is wearing the wearable electronic device **100**. FIG. **1**B shows the wearable electronic device **100** of FIG. **1**A from the back with the band **102** opened.

[0037] With reference to FIGS. **1**A and **1**B, the wearable electronic device **100** may include a main body **101** that is operable to be coupled to the body part of a user (such as a wrist) via the band **102** or other attachment mechanism. For example, the band **102** may be operable to attach to the main body **101** and to the body part of the user, thus attaching the main body **101** to the body part of the user. A housing component **104** (such as a plate, a curved plate, or other surface component) may be coupled to the main body **101** in such a way that the wearable electronic device **100** may determine the amount of force exerted by the user's body part contacting the housing component **104** when the band **102** is attached to user. The wearable electronic device **100** may utilize the determined force in a variety of ways that will be discussed in detail below.

[0038] The housing component **104** may be a sensor plate associate with a sensor of the main body **101**. As such, the housing component **104** may include one or more sensor windows **105** associated with the operation of that sensor.

[0039] The band **102** may include a first band portion **103**A and a second band portion **103**B. The second band portion **103**B may include a band tightening mechanism **106** that is operable to tighten the band **102** around the user's body part. However, it is understood that this is an example. In various implementations, the first band portion **103**A may include such a tightening mechanism instead of and/or in addition to the second band portion **103**B. Further, in some implementations, the band **102** may not have separate portions and/or may have more than two portions without departing from the scope of the present disclosure.

[0040] FIG. **2**A shows an example cross-sectional view of the wearable electronic device **100** of FIG. **1**B, taken along line A-A of FIG. **1**B. The housing component **104** may be coupled to the main body **101** via a housing component force sensor **210** (such as via one or more adhesives, springs, and/or other attachment mechanisms). The housing component force sensor **210** may include one or more first electrodes **211** separated from one or more second electrodes **213** by a deformable material **212** (such as silicone, an air gap, and so on). For example, the first and second electrodes **211** and **213** may be discrete electrodes or sets of electrodes. The first and second electrodes **211** and **213** may be included in a flexible circuit layer. The first and second electrodes **211** and **213** may be aligned to form a capacitor. Force exerted on the housing component **104** may deform the deformable material **212**, changing the proximity of the first and second electrodes **211** and **213** and thus a capacitance of a capacitor formed by the first and second electrodes **211** and **213** (e.g., the capacitance between the first and second electrodes **211** and **213**). The housing component force sensor **210** may generate force signals that represent the changes in capacitance.

[0041] A processing unit **218** may be disposed within the main body **101**. In this example, the processing unit **218** may be disposed on a printed circuit board **216** mounted within the body such as via one or more adhesives and/or other attachment mechanisms. The printed circuit board **216**, and thus the processing unit **218**, may be connected to the housing component force sensor **210** via a flex circuit **214** (and/or other electrical or communication connection). The processing unit **218** may receive the force signal generated by the housing component force sensor **210** via the flex circuit **214** and the printed circuit board **216**. The processing unit **218** may associate various exerted force values with various capacitance changes. As such, the processing unit **218** may analyze the force signal to determine the force exerted on the housing component **104**.

[0042] The force determined by the processing unit **218** by analyzing force signals may be a non-binary value. The processing unit **218** may analyze the force signals to determine forces across a range of force values as opposed to detecting that a threshold amount of force is exerted. The processing unit **218** may analyze force signals to correlate data in the force signals to an amount of force applied out of a range of possible forces.

[0043] The processing unit **218** may utilize the determined force exerted on the housing component **104** for a variety of purposes. Examples that will be discussed in further detail below include determining a tightness of the band **102** (such as for automatic band adjustment, signaling a user to adjust, and so on), determining whether or not the wearable electronic device **100** is being worn, and obtaining user input (such as wrist movement gestures and so on), determining health information (using the determined force alone and/or in combination with measurements from a health sensor and/or other data). Additionally or alternatively, the processing unit **218** may utilize the determined force exerted on the housing component **104** in combination with force determined based on signals from another force sensor (such as to adjust one or both of the determined forces, to determine pressure based on both determined forces, and so on). However, it is understood that these are examples and that the processing unit **218** may utilize the determined force exerted on the housing component **104** for a variety of other purposes (such as in combination with data from one or more accelerometers, gyroscopes, altimeters, and so on) without departing from the scope of the present disclosure.

[0044] In some embodiments, the housing component force sensor **210** may function as a gasket, positioned in a perimeter between the main body **101** and the housing component **104**, and forming a seal between the main body **101** and the housing component **104**. Further, although the housing component force sensor **210** is described as a single force sensor, it is understood that this is an example. In various implementations, multiple housing component force sensors **210** may be positioned in a perimeter between the main body **101** and the housing component **104**. The multiple housing component force sensors **210** may be part of a gasket or other structure that includes the housing component force sensors **210** with the deformable material **212** and/or other materials filling gaps in between the housing component force sensors **210**. In such an implementation, the processing unit **218** may analyze and compare force signals from each housing component force sensor **210** to determine one or more forces exerted on the housing component **104** in various directions, at various positions, and so on.

[0045] As discussed above, the tightness of the band **102** may be determined by the processing unit **218** using the determined force exerted on the housing component **104**. FIG. **2**B shows the wearable electronic device **100** of FIG. **2**A on a user's body part **230** (depicted as the user's wrist, though this is merely an example and any body part may be

Masimo Ex. 1009
IPR Petition - US D962,936

used in other implementations). The user's body part **230** may exert force on the housing component **104**. The force exerted by the user's body part **230** on the housing component **104** may be proportional to the tightness of the band **102**. In other words, the tighter the band **102**, the more force exerted by the user's body part **230** on the housing component **104**. Similarly, the looser the band **102**, the less force exerted by the user's body part **230** on the housing component **104**.

[0046] The tightness of the band **102** may be significant for user comfort, ensuring the wearable electronic device **100** stays attached, and so on. As such, the tightness of the band **102** may be monitored for user comfort based on default tightness settings, user specified comfort settings, and so on. If the band **102** is too tight or too loose, the processing unit **218** may provide output instructing the user to adjust the band **102**, automatically adjust the band **102** using a mechanism such as the band tightening mechanism **106** discussed below, and/or perform other such actions.

[0047] The tightness of the band **102** may be significant for reasons other than comfort. In various implementations, the wearable electronic device **100** may include one or more sensors and/or other components whose operation may depend on tightness of the band **102**. In such implementations, the processing unit **218** may provide adjustment instructions and/or adjust the band **102** to improve operation of such sensors and/or other components.

[0048] For example, a health sensor **215** may be coupled to the housing component **104**. In one embodiment, the health sensor **215** may be a photoplethysmogram (PPG) sensor that emits light through the sensor windows **105** into the user's body part **230** and receives the portion of the transmitted light that is reflected back from the user's body part **230**. The health sensor **215** may be coupled to the processing unit **218** via the printed circuit board **216** and a flex circuit **217** (and/or other electrical or communication connection) and may transmit measurements regarding the received light to the processing unit **218**. The operation of the health sensor **215** may be affected by the tightness of the band **102**. For example, the health sensor **215** may transmit less accurate measurements if the band **102** is too loose. As such, the processing unit **218** may provide adjustment instructions and/or tighten the band **102** to improve operation of the health sensor **215**.

[0049] FIG. **2**C shows the wearable electronic device **100** of FIG. **2**B after tightening of the band **102** by the band tightening mechanism **106** as controlled by the processing unit **218**. In this example, the second band portion **103**B may be divided into sections separated by a gap **226**. The sections may be connected to a winch mechanism **228** by cords **229** (and/or wires or other joining mechanisms). The winch mechanism **228** may be controlled by a motor **227**, which may be connected to the printed circuit board **216**, and thus the processing unit **218**, via a flex circuit **225** (and/or other electrical or communication connection). Thus, the processing unit **218** may control the winch mechanism **228** to roll and/or unroll the cords **229** to bring the sections closer and narrow the gap **226** (see FIG. **2**C) and/or to allow the sections to move further apart and expand the gap **226** (See FIG. **2**B).

[0050] However, it is understood that the band tightening mechanism **106** is an example. Other band tightening mechanisms **106** constructed from various different components functioning under various different principles of operation can be used without departing from the scope of the present disclosure. For example, in some implementations, a memory wire such as Nitinol may be embedded in the band **102**. The processing unit **218** may cause current to be provided to such a memory wire in order to change the shape of the memory wire, thus adjusting the tightness of the band **102**.

[0051] Moreover, as discussed above, the processing unit **218** may utilize the determined force exerted on the housing component **104** to determine whether or not the wearable electronic device **100** is currently being worn. In various implementations, the processing unit **218** may operate in different states depending on whether or not the wearable electronic device **100** is currently worn (such as an active state if worn and a sleep or lower power state if unworn). In such implementations, the processing unit **218** may determine that the wearable electronic device **100** is worn if the determined force exerted on the housing component **104** is above a threshold force value and that the wearable electronic device **100** is unworn if the determined force exerted on the housing component **104** is below the threshold force value.

[0052] As also discussed above, the processing unit **218** may utilize the determined force exerted on the housing component **104** to obtain user input. For example, different movements of the user's body part **230** (such as bending of the wrist, flexing of the wrist, and so on) may exert different forces on the housing component **104**. The processing unit **218** may analyze the determined force in order to determine how the user's body part **230** has moved. These different movements may be interpreted as gestures that are associated with different inputs. As such, the user may provide particular input to the processing unit **218** by making particular movements. For example, bending of the user's body part **230** may indicate to the processing unit **218** that the user wants to wake the wearable electronic device **100** from a sleep and/or otherwise low power state.

[0053] As further discussed above, the processing unit **218** may utilize the determined force exerted on the housing component **104** to determining health information. In some examples, the processing unit **218** may utilize the determined force by itself to determine health information. In other examples, the processing unit **218** may utilize the determined force in combination with measurements from a health sensor **215** and/or data from other sensors or devices (such as a camera, an accelerometer, and so on).

[0054] In some implementations, the processing unit **218** may determine a tightness of the band **102** based on the determined force over time. This determined tightness over time may be used to determine size changes in the user's body part **230** over time. Using such data, the processing unit **218** may be able to determine and/or detect an indication of a user's body fat, an indication of blood pressure, an indication of a pulse rate, an indication of swelling (such as caused by an allergic reaction, perhaps to a material used in the wearable electronic device **100**), an indication of an allergic reaction, an indication of hydration (such as by relaxation of swelling over time), an indication of conditions such as edema or cutaneous edema, and so on. In various implementations, the processing unit **218** may utilize the determined tightness in combination with measurements by the health sensor **215**, such as a PPG sensor, to determine health information of the user such as blood perfusion.

Masimo Ex. 1009
IPR Petition - US D962,936

[0055] In still other implementations, the processing unit **218** may receive measurements from the health sensor **215**. However, as described earlier, the measurements transmitted by the health sensor **215** may be inaccurate or less accurate if the band **102** is too loose or too tight. As such, the processing unit **218** may disregard measurements from the health sensor **215** if the determined force exerted on the housing component **104** indicates the band **102** is too loose or too tight.

[0056] Alternatively, the processing unit **218** may attempt to obtain a replacement measurement from the health sensor **215** if the determined force exerted on the housing component **104** indicates the band **102** is too loose or too tight. In such an example, measurements may be discarded if obtained from the health sensor **215** when the determined force exerted on the housing component **104** indicates the band **102** is too loose or too tight. In various implementations, the processing unit **218** may attempt to correct possible inaccuracies in the measurement.

[0057] As additionally discussed above, the processing unit **218** may utilize the determined force exerted on the housing component **104** in combination with force signals from another force sensor and/or data from other components. In various examples, the processing unit **218** may adjust the force determined from the other force sensor, adjust the determined force exerted on the housing component **104** based on the force determined from the other force sensor, determine pressure based on both determined forces, and so on.

[0058] For example, the wearable electronic device **100** may include an input device that interprets exerted force as input. As shown in FIGS. **2A-2C**, the main body **101** may include a cover glass **224** (which may be part of a display such as a touch display) coupled to the main body **101**. The cover glass **224** may be coupled to a cover glass force sensor **220** (such as via one or more adhesives or other attachment mechanisms). The cover glass force sensor **220** may include one or more first electrodes **221** separated from one or more second electrodes **223** by a deformable material **222** (such as silicone, an air gap, and so on). The first and electrodes **221** and **223** may form a capacitor. Force exerted on the cover glass **224** may deform the deformable material **222**, changing a capacitance of the capacitor. The cover glass force sensor **220** may generate force signals indicating such changes in capacitance.

[0059] The cover glass force sensor **220** may be coupled to the printed circuit board **216**, and thus the processing unit **218**, via a flex circuit **219** (and/or other electrical or communication connection). The processing unit **218** may receive the force signals generated by the cover glass force sensor **220** via the flex circuit **219** and the printed circuit board **216**. The processing unit **218** may associate various exerted force values with various capacitance changes. As such, the processing unit **218** may analyze the force signal to determine the amount of force exerted on the cover glass **224**.

[0060] The processing unit **218** may evaluate both the first force signals generated by the housing component force sensor **210** corresponding to the force exerted on the housing component **104** and the second force signals generated by the cover glass force sensor **220** corresponding to the force exerted on the cover glass **224**. In some implementations, the processing unit **218** may utilize one of the force signals to adjust the other of the force signals.

[0061] For example, a force exerted by a user on the cover glass **224** while the wearable electronic device **100** is worn may be different from a force applied while the wearable electronic device **100** is unworn. This may be because the wearable electronic device **100** is being pressed between the exertion of force on the cover glass **224** and the force between the user's body part **230** and the wearable electronic device **100** when the wearable electronic device **100** is worn. Conversely, force exerted on the cover glass **224** is not opposed by force between the user's body part **230** and the wearable electronic device **100** when the wearable electronic device **100** is unworn. Thus, the same amount of force exerted on the cover glass **224** could be determined to be different depending on whether or not the wearable electronic device **100** is worn at the time.

[0062] Therefore the processing unit **218** may modify the force detected on the cover glass **224** by any force detected on the housing component **104** in order for the processing unit **218** to determine force exerted on the cover glass **224** more uniformly regardless whether the wearable electronic device **100** is worn or not. For example, the force detected on the housing component **104** may be subtracted from the force detected on the cover glass **224**. By way of another example, a modifier may be added to the force detected on the cover glass **224** when force is not detected on the housing component **104**. Such a modifier may correspond to the force normally detected on the housing component **104** when the wearable electronic device **100** is worn.

[0063] By way of another example, if only the force exerted on the housing component **104** is used to determine the tightness of the band **102** while a user is exerting a force on the cover glass **224**, the processing unit **218** may determine that the band **102** is tighter than it really is. This is because the force exerted on the cover glass **224** also exerts force on the housing component force sensor **210**. To determine a more accurate tightness of the band **102**, the processing unit **218** may subtract the force exerted on the cover glass **224** from the force exerted on the housing component **104** (and/or otherwise modify the determined force exerted on the housing component **104** based on the force exerted on the cover glass **224**).

[0064] In other implementations, the processing unit **218** may use both forces in combination. For example, if force is exerted on both the housing component **104** and the cover glass **224** in relatively equal amounts, the processing unit **218** may determine that the forces are due to pressure as opposed to a user exerting force. The processing unit **218** may then evaluate the forces to determine a pressure to which the wearable electronic device **100** is subjected.

[0065] In some examples, the pressure may be hydrostatic pressure or water pressure, such as where the wearable electronic device **100** is submerged in water and/or other liquid. In such an example, the processing unit **218** may associate the forces detected with particular hydrostatic pressures in order to determine a depth of liquid in which the wearable electronic device **100** is immersed.

[0066] Although a particular configuration of the housing component **104**, the main body **101**, and the housing component force sensor **210** are shown and described, it is understood that this is an example. In other implementations, various configurations of the same, similar, and/or different components may be utilized without departing from the scope of the present disclosure. For example, FIGS.

Masimo Ex. 1009
IPR Petition - US D962,936

3-7 show additional examples of the wearable electronic device **100** of FIG. **2**A in accordance with further embodiments.

[0067] FIG. **3** illustrates an example implementation including a deflection element **331** coupled to one or more strain gauges **332**. The deflection element **331** may be connected to the health sensor **315** and/or the housing component **304** such that force exerted on the housing component **304** may cause the deflection element **331** to deflect. An electrical property of the strain gauge **332** (e.g., resistance) may change based on the deflection. The processing unit **318** may accordingly receive force signals from the strain gauge **332** via a flex circuit **333** (and/or other electrical or communication connection) and the printed circuit board **316**, and may correlate the force signals to an amount of force.

[0068] The housing component **304** may be coupled to the main body **301** via adhesive **334**. The deflection element **331** may be positioned within the adhesive **334** between the housing component **304** and the main body **301**. In some examples, the adhesive **334** may be flexible such that the housing component **304** is operable to move with respect to the main body **301** under the exertion of force to deflect the deflection element **331**. In other examples, the adhesive **334** may form a rigid seal and the housing component **304** may be flexible in order to deflect the deflection element **331** under the exertion of force.

[0069] FIG. **4** illustrates an example implementation including a single electrode **435** formed of indium tin oxide or other material positioned on the printed circuit board **416**. The single electrode **435** may form a capacitor with the user's body part. Force exerted by the user's body part on the housing component **404** may change the proximity between the user's body part and the electrode **435** thus changing the capacitance of a capacitor formed by the user's body and the electrode **435**. The processing unit **418** may receive force signals from such a capacitor indicating capacitive changes and correlate the capacitive changes to an amount of force exerted on the housing component **404**.

[0070] In some examples, the adhesive **434** and/or the housing component **404** may be flexible. This may allow the user's body to move closer to the electrode **435** under the exertion of force. The more movement that is possible between the user's body and the electrode **435** may allow for a greater variety of capacitance differences of a capacitor formed by the user's body and the electrode **435**, allowing for greater sensitivity in sensing force.

[0071] Although the electrode **435** is shown as positioned on the printed circuit board **416**, it is understood that this is an example. In various implementations, the electrode **435** may be positioned at different locations without departing from the scope of the present disclosure. For example, the electrode **435** may be positioned on the health sensor **415** in some implementations. By way of another example, in various implementations, the electrode **435** may be positioned on the housing component **404** (such as a layer of indium tin oxide, nanostructures, nanomesh, nanowires, a conductive film, and so on deposited on the inner surface of the housing component **404** facing the health sensor **415**) or on the main body **401**.

[0072] FIG. **5** illustrates an example implementation including a first electrode **536** positioned on the printed circuit board **516** and a second electrode **537** positioned on the housing component **504** that may form a capacitor. An exertion of force on the housing component **504** may bring the first and second electrodes **536** and **537** closer together, changing the capacitance of a capacitor formed by the first and second electrodes **536** and **537**. The processing unit **518** may monitor force signals from the first and/or second electrodes **536** and **537** and correlate the capacitance changes to an amount of force exerted on the housing component **504**.

[0073] In some examples, the adhesive **534** and/or the housing component **504** may be flexible. This may allow the first and second electrodes **536** and **537** to move closer together under the exertion of force on the housing component **504**.

[0074] As compared with the example shown in FIG. **5**, the example depicted in FIG. **6** includes multiple electrodes **637** (a first set of electrodes **637**) positioned on the printed circuit board **616** and multiple electrodes **638** (a second set of electrodes **638**) positioned on the housing component **604**. Capacitors may be formed by pairs of electrodes of the first set of electrodes **637** and the second set of electrodes **638**. A force applied to the housing component **604** may bring one or more electrodes in the first and second sets of electrodes **637** and **638** closer together, and change the respective capacitances of those capacitors. The processing unit **618** may monitor and compare force signals from one or more capacitors in order to correlate respective capacitance changes to amounts of force exerted at various particular locations on the housing component **604**.

[0075] The adhesive **634** and/or the housing component **604** may be flexible such that the electrodes in the first and second sets of electrodes **637** and **638** may be able to move with respect to each other independently and/or relatively independently based on where force is exerted on the housing component **604**. This may enable the processing unit **618** to more granularly determine different amounts of force exerted at different locations on the housing component **604**.

[0076] FIG. **7** illustrates an example implementation including a flexible housing component **704** with a strain gauge **739** disposed thereon. An exertion of force on the flexible housing component **704** may cause the flexible housing component **704** to flex, which may cause the strain gauge **739** to deflect. An electrical property of the strain gauge **739** (e.g., resistance) may change based on the deflection. As such, the processing unit **718** may accordingly receive force signals from the strain gauge **739** indicating flexing of the flexible housing component **704** via a flex circuit **740** (and/or other electrical or communication connection) and the printed circuit board **716**. The processing unit **718** may correlate the received force signals to force amounts.

[0077] FIG. **8** shows a flow chart illustrating an example method **800** for determining band tightness. This method **800** may be performed by one or more of the wearable electronic devices of FIGS. **1**A-**7**.

[0078] At **810**, a force sensor may be monitored. The force sensor may be positioned between a body of a wearable electronic device and a housing component that contacts a user's body part when the wearable electronic device is worn.

[0079] At **820**, one or more force signals may be received from the force sensor relating to force exerted on the housing component. The force may be the force exerted on the housing component by the user's body part and may be

Masimo Ex. 1009
IPR Petition - US D962,936

related to a band of the wearable electronic device causing the user's body part to exert the force based on a tightness of the band.

[0080] At **830**, the tightness of the band associated with the force signal from the force sensor may be determined. Higher amounts of exerted force indicated by the force signal may correlate to a tighter band. Conversely, lower amounts of exerted force indicated by the force signal may correlate to a looser band.

[0081] Although the example method **800** is illustrated and described as including particular operations performed in a particular order, it is understood that this is an example. In various implementations, various orders of the same, similar, and/or different operations may be performed without departing from the scope of the present disclosure.

[0082] For example, in various implementations, the example method **800** may include the additional operations related to band adjustment. By way of example, the example method **800** may include the additional operation of determining whether the band tightness is within a tightness range. The tightness range may be a range of force values. In some implementations of such an example, the example method **800** may include the additional operation of causing the band to be adjusted if the band tightness is not within the tightness range. In some cases, the user may be notified prior to adjustment of the band. In such cases, the user may be able to override band adjustment in response to such a notification.

[0083] In other implementations, the example method **800** may include the additional operation of notifying the user that the band needs adjustment if the band tightness is not within the tightness range. In such implementations, the user may be prompted to adjust the band.

[0084] FIG. **9** shows a flow chart illustrating an example method **900** for determining health information using a health sensor and a force sensor. This method **900** may be performed by one or more of the wearable electronic devices of FIGS. **1A-7**.

[0085] At **910**, a measurement may be received from a health sensor. For example, the health sensor may be a PPG sensor.

[0086] At **920**, a force signal may be received from a housing component force sensor. The housing component force sensor may be positioned between a body of a wearable electronic device and a housing component that contacts a user's body part. The force signal may indicate force exerted on the housing component by the user's body part.

[0087] At **930**, health information for the user may be determined based on the force signal and the measurement. For example, the force may be used to determine the tightness of a band of the wearable device, which may be used in combination with measurements of a PPG sensor to determine a blood perfusion for the user.

[0088] Although the example method **900** is illustrated and described as including particular operations performed in a particular order, it is understood that this is an example. In various implementations, various orders of the same, similar, and/or different operations may be performed without departing from the scope of the present disclosure.

[0089] For example, 930 describes the health information as being determined based on the force signal and the measurement. However, in some implementations, the health information may be determined based on the force signal or the measurement without being based on both. Further, the health information may also be based on data from one or more other sensors.

[0090] By way of another example, the force may be used to determine whether or not the health information is accurate. In some implementations, the health information may be accurate if the tightness of a band is within a tightness range. In such an example, the force may be used to determine the tightness of the band is within the tightness range. If the tightness of the band is not within the tightness range, the health information may be discarded as inaccurate and/or may be modified based on the force.

[0091] FIG. **10** shows a flow chart illustrating an example method **1000** for adjusting detected force determinations. This method **1000** may be performed by one or more of the wearable electronic devices of FIGS. **1A-7**.

[0092] At **1010**, a first force signal may be received from a cover glass force sensor. The first force signal may indicate a force exerted on the cover glass (or other input device) by a user. The cover glass may be a component of a display, a touch display, and/or other assembly.

[0093] At **1020**, a second force signal may be received from a housing component force sensor. The housing component force sensor may be positioned between a body of a wearable electronic device and a housing component that contacts a user's body part. The housing component may be positioned on an opposite side of the wearable electronic device from the cover glass. The force signal may indicate force exerted on the housing component by the user's body part.

[0094] At **1030**, a force exerted on the cover glass may be determined using the first force signal. For example, a lookup table of first force signal values and force values may be consulted based on the first force signal. A force value corresponding to the value of the first force signal may be selected to determine the force exerted on the cover glass.

[0095] At **1040**, a force exerted on the housing component may be determined using the second force signal. For example, a lookup table of second force signal values and force values may be consulted based on the second force signal. A force value corresponding to the value of the second force signal may be selected to determine the force exerted on the housing component.

[0096] At **1050**, the determined force on the cover glass may be adjusted using the second force signal. For example, the second force signal may be subtracted from the determined force on the cover glass. This may allow a determined force on the cover glass to be obtained that is free of influence from forces exerted on the housing component.

[0097] Although the example method **1000** is illustrated and described as including particular operations performed in a particular order, it is understood that this is an example. In various implementations, various orders of the same, similar, and/or different operations may be performed without departing from the scope of the present disclosure.

[0098] For example, 1050 describes the determined force on the cover glass being adjusted using the second force signal. However, in various implementations, the determined force on the housing component may be adjusted using the first force signal instead of and/or in addition to adjusting the determined force on the cover glass using the second force signal.

[0099] FIG. **11** shows a block diagram illustrating example components that may be utilized in the wearable electronic device **100** of FIG. **1A** and example functional

Masimo Ex. 1009
IPR Petition - US D962,936

relationships of those components. The wearable electronic device **100** may include one or more processing units **1151**, force sensors **1152** (such as those discussed above), storage media **1153** (such as a magnetic storage medium, an optical storage medium, a magneto-optical storage medium, a read only memory, a random access memory, an erasable programmable memory, and so on), one or more other sensors **1154** (such as one or more health sensors, accelerometers, gyroscopes, light sensors, cameras, proximity sensors, touch sensors, and so on), communication component **1155**, and/or other components. The processing unit **1151** may execute instructions stored in the storage media **1153** in order to perform various operations discussed above.

[0100] For example, the processing unit **1151** may receive health data from a health sensor **1154** and may store such health data in the storage media **1154**. By way of another example, the processing unit **1151** may receive force signals from the force sensor(s) **1152** and may utilize lookup tables stored in the storage media **1154** to correlate force signals to force amounts in order to determine amounts of applied forces, to compare force amounts to threshold force values, to correlate force amounts and/or threshold force values to tightnesses of a band, and so on. The processing unit **1151** may store data regarding such force signals, determined force amounts, determined tightnesses, and so on in the storage media **1154**. In examples where the processing unit **1151** determines the tightness of a band, the processing unit **1151** may compare the determined tightness of the band to tightness ranges stored in the storage media **1154** to determine whether or not the determined tightness is within such a range.

[0101] The wearable electronic device **100** may communicate with one or more other electronic devices, such as the electronic device **1150**, via the communication component **1155** over one or more wired and/or wireless communication connections. Similar to the wearable electronic device **100**, the electronic device **1150** may include one or more communication components **1156**, processing units **1157**, storage media **1158**, and/or other components. In various examples, the wearable electronic device **100** may transmit data and/or notifications regarding data to the electronic device **1150** via the communication components **1155** and **1156**, such as the above discussed health data, force signals, determined force amounts, determined band tightnesses, and so on. The processing unit **1157** may store such data or notifications in the storage media **1158**.

[0102] Alternatively and/or additionally, in some examples, the wearable electronic device **100** and the electronic device **1150** may be configured in a cooperative computing arrangement. As such, the electronic device **1150** may utilize the processing unit **1157** to process the data in one or more of the various ways the processing unit **1151** is described processing such data above. For example, the processing unit **1157** may process received health data to determine health information for a user of the wearable electronic device **100**. By way of another example, the storage media **1158** may store one or more lookup tables described above. As such, the processing unit **1157** may receive force signals and utilize the lookup tables to correlate force signals to force amounts in order to determine amounts of applied forces, to compare force amounts to threshold force values, to correlate force amounts and/or threshold force values to tightnesses of a band, and so on. The processing unit **1157** may store the results of such determinations in the storage media **1158**, transmit such results to the wearable electronic device **100**, and/or perform various other operations

[0103] Although the present disclosure is described as positioning force sensors between a housing component and a main body, it is understood that these are examples. In various implementations, force sensors may be positioned anywhere on a wearable electronic device that contacts a user's body part when the wearable electronic device is worn without departing from the scope of the present disclosure. For example, a force sensor may be positioned on an inner surface of a band that contacts a user's body part when the electronic device is worn. By way of another example, a force sensor may be positioned on an outer surface of the housing component that contacts a user's body part when the wearable electronic device is worn. By way of still another example, a force sensor may be positioned on a portion of the main body that contacts a user's body part when the wearable electronic device is worn.

[0104] Further, although the present disclosure is described in the context of a wearable electronic device **100**, it is understood that this is an example. The force sensors and/or other techniques discussed herein may be used with other devices (electronic, non-electronic, non-wearable, portable, and so on), such as the back of a smart phone, supports attached to the bottom of a laptop computer, and/or any other device without departing from the scope of the present disclosure.

[0105] As described above and illustrated in the accompanying figures, a wearable electronic device may include a body, a housing component (such as a plate, a curved plate, or other surface component), and a band or other attachment mechanism operable to attach the body to the body part of a user. A force sensor may be positioned between the housing component and the body such that it produces force signals based on a force exerted between the user's body part and the housing component. A processing unit may receive the force signals and process them to perform various actions. For example, the processing unit may process the force signals to determine a tightness of the band, such as for automatic band adjustment. By way of another example, the processing unit may use the force signals to determine health information for the user, such as in combination with measurements of the body part obtained via a health sensor included in the body. By way of still another example, the body may include an input mechanism (such as a touch surface including a cover glass) that interprets the force of a user's touch as input and the processing unit may use the force signals and signals from the input mechanism to adjust determinations of force applied to the housing component or input mechanism. Various uses for the force signals from the force sensor are possible and contemplated.

[0106] In the present disclosure, the methods disclosed may be implemented as sets of instructions or software readable by a device. Further, it is understood that the specific order or hierarchy of steps in the methods disclosed are examples of sample approaches. In other embodiments, the specific order or hierarchy of steps in the method can be rearranged while remaining within the disclosed subject matter. The accompanying method claims present elements of the various steps in a sample order, and are not necessarily meant to be limited to the specific order or hierarchy presented.

Masimo Ex. 1009
IPR Petition - US D962,936

[0107] The foregoing description, for purposes of explanation, used specific nomenclature to provide a thorough understanding of the described embodiments. However, it will be apparent to one skilled in the art that the specific details are not required in order to practice the described embodiments. Thus, the foregoing descriptions of the specific embodiments described herein are presented for purposes of illustration and description. They are not targeted to be exhaustive or to limit the embodiments to the precise forms disclosed. It will be apparent to one of ordinary skill in the art that many modifications and variations are possible in view of the above teachings.

What is claimed is:

1. A wearable electronic device, comprising:

a body;

a housing component coupled to the body;

a band operable to attach the body to a body part of a user;

a force sensor, coupled to the housing component, operable to produce a force signal based on a force exerted between the body part of the user and the housing component; and

a processing unit, communicably coupled to the force sensor, operable to determine a tightness of the band based on the force signal received from the force sensor.

2. The wearable electronic device of claim **1**, wherein:

the force sensor comprises a strain gauge mounted to a deflection element that is connected to the body and the housing component; and

the force signal indicates deflection of the deflection element based on strain data detected by the strain gauge.

3. The wearable electronic device of claim **1**, wherein:

the force sensor comprises a gasket positioned between the body and the housing component;

the gasket comprises a pair of electrodes separated by a deformable material; and

the force signal indicates a capacitance between the pair of electrodes.

4. The wearable electronic device of claim **1**, wherein:

the force sensor includes an electrode; and

the force signal indicates a capacitance between the electrode and the body part of the user.

5. The wearable electronic device of claim **4**, wherein the electrode is coupled to one of the housing component, the body, or a circuit board coupled to the body.

6. The wearable electronic device of claim **4**, wherein the electrode comprises indium tin oxide.

7. The wearable electronic device of claim **1**, further comprising a circuit board coupled to the body, wherein:

the force sensor comprises:

a first electrode coupled to the housing component; and

a second electrode coupled to the circuit board; and

the force signal indicates a capacitance between the first electrode and the second electrode.

8. The wearable electronic device of claim **7**, wherein the first electrode comprises a first set of electrodes and the second electrode comprises a second set of electrodes.

9. The wearable electronic device of claim **7**, wherein the housing component is flexible.

10. A wearable electronic device, comprising:

a body;

a surface component coupled to the body, the surface component positioned adjacent to a body part of a user when the wearable electronic device is worn;

a health sensor, coupled to the body, operable to obtain a measurement of the body part of the user;

a force sensor, coupled to the surface component, operable to produce a force signal based on a force exerted between the body part of the user and the surface component; and

a processing unit, communicably coupled to the force sensor, operable to determine health information for the user based on the force signal received from the force sensor and the measurement obtained by the health sensor.

11. The wearable electronic device of claim **10**, wherein the processing unit determines whether the measurement obtained by the health sensor is accurate based on the force signal.

12. The wearable electronic device of claim **11**, further comprising a band operable to attach the body to the body part of the user;

wherein the processing unit:

determines a tightness of the band based on the force signal;

if the tightness of the band is within a range of force values, determines the measurement obtained by the health sensor is accurate; and

if the tightness of the band is outside the range of force values, determines the measurement obtained by the health sensor is inaccurate.

13. The wearable electronic device of claim **10**, wherein the health information includes at least one of a swelling indication, a blood pressure, a body fat indication, an allergic reaction indication, a hydration indication, or an edema indication.

14. The wearable electronic device of claim **10**, further comprising:

a band operable to attach the body to the body part of the user; and

a band tightness adjustment mechanism;

wherein the processing unit:

determines a tightness of the band based on the force signal; and

causes the tightness of the band to be altered using the band tightness adjustment mechanism.

15. The wearable electronic device of claim **14**, wherein the processing unit provides a notification to the user by causing the tightness of the band to be altered.

16. A wearable electronic device, comprising:

a body;

a cover glass coupled to the body;

a plate coupled to the body, the plate positioned adjacent to a body part of a user when the wearable electronic device is worn;

a first force sensor, coupled to the cover glass, operable to produce a first force signal based on a first force exerted on the cover glass;

a second force sensor, coupled to the plate, operable to produce a second force signal based on a second force exerted between the body part of the user and the plate; and

Masimo Ex. 1009
IPR Petition - US D962,936

a processing unit, communicably coupled to the first and second force sensors, operable to:

determine an amount of the first force based on the first force signal;

determine an amount of the second force based on the second force signal; and

adjust the amount of the first force based on the second force signal.

17. The wearable electronic device of claim **16**, wherein the processing unit is further operable to adjust the amount of the second force based on the first force signal.

18. The wearable electronic device of claim **16**, wherein the processing unit is further operable to determine a pressure to which the body is exposed based on the first force signal and the second force signal.

19. The wearable electronic device of claim **18**, wherein the pressure is a water pressure.

20. The wearable electronic device of claim **16**, wherein the processing unit determines whether the wearable electronic device is worn by the user based on the second force signal.

* * * * *

Masimo Ex. 1009
IPR Petition - US D962,936