US010912502B2

(12) **United States Patent**
Poeze et al.

(10) **Patent No.: US 10,912,502 B2**
(45) **Date of Patent: *Feb. 9, 2021**

(54) **USER-WORN DEVICE FOR NONINVASIVELY MEASURING A PHYSIOLOGICAL PARAMETER OF A USER**

(71) Applicant: **Masimo Corporation**, Irvine, CA (US)

(72) Inventors: **Jeroen Poeze**, Rancho Santa Margarita, CA (US); **Marcelo Lamego**, Cupertino, CA (US); **Sean Merritt**, Lake Forest, CA (US); **Cristiano Dalvi**, Lake Forest, CA (US); **Hung Vo**, Fountain Valley, CA (US); **Johannes Bruinsma**, Opeinde (NL); **Ferdyan Lesmana**, Irvine, CA (US); **Massi Joe E. Kiani**, Laguna Niguel, CA (US); **Greg Olsen**, Lake Forest, CA (US)

(73) Assignee: **Masimo Corporation**, Irvine, CA (US)

(*) Notice: Subject to any disclaimer, the term of this patent is extended or adjusted under 35 U.S.C. 154(b) by 0 days.

This patent is subject to a terminal disclaimer.

(21) Appl. No.: **17/031,407**

(22) Filed: **Sep. 24, 2020**

(65) **Prior Publication Data**

US 2021/0000392 A1 Jan. 7, 2021

Related U.S. Application Data

(60) Continuation of application No. 16/834,538, filed on Mar. 30, 2020, which is a continuation of application
(Continued)

(51) **Int. Cl.**

A61B 5/1455	(2006.01)
A61B 5/145	(2006.01)
A61B 5/00	(2006.01)

(52) **U.S. Cl.**
CPC ***A61B 5/1455*** (2013.01); ***A61B 5/14532*** (2013.01); ***A61B 5/14546*** (2013.01);
(Continued)

(58) **Field of Classification Search**
CPC . A61B 5/1455; A61B 5/14546; A61B 5/6838; A61B 5/6816; A61B 5/6829;
(Continued)

(56) **References Cited**

U.S. PATENT DOCUMENTS

3,452,215	A	6/1969	Alessio
3,760,582	A	9/1973	Thiess et al.

(Continued)

FOREIGN PATENT DOCUMENTS

CA	2264029	3/1998
CN	1270793	10/2000

(Continued)

OTHER PUBLICATIONS

US 8,845,543 B2, 09/2014, Diab et al. (withdrawn)

(Continued)

Primary Examiner — Chu Chuan Liu
(74) *Attorney, Agent, or Firm* — Knobbe Martens Olson & Bear LLP

(57) **ABSTRACT**

The present disclosure relates to noninvasive methods, devices, and systems for measuring various blood constituents or analytes, such as glucose. In an embodiment, a light source comprises LEDs and super-luminescent LEDs. The light source emits light at at least wavelengths of about 1610 nm, about 1640 nm, and about 1665 nm. In an embodiment, the detector comprises a plurality of photodetectors arranged in a special geometry comprising one of a substantially linear substantially equal spaced geometry, a substantially linear substantially non-equal spaced geometry, and a substantially grid geometry.

30 Claims, 65 Drawing Sheets

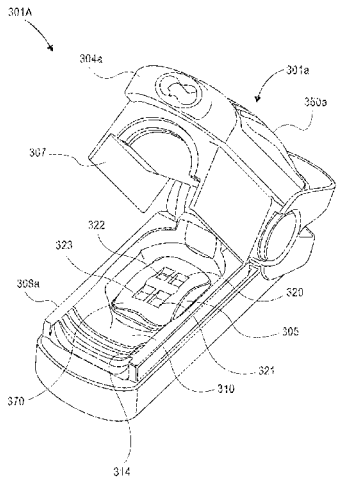

Masimo Ex. 1041
IPR Petition - US D962,936

Related U.S. Application Data

No. 16/725,292, filed on Dec. 23, 2019, now Pat. No. 10,624,564, which is a continuation of application No. 16/534,949, filed on Aug. 7, 2019, now Pat. No. 10,588,553, which is a continuation of application No. 16/409,515, filed on May 10, 2019, now Pat. No. 10,376,191, which is a continuation of application No. 16/261,326, filed on Jan. 29, 2019, now Pat. No. 10,292,628, which is a continuation of application No. 16/212,537, filed on Dec. 6, 2018, now Pat. No. 10,258,266, which is a division of application No. 14/981,290, filed on Dec. 28, 2015, now Pat. No. 10,335,068, which is a continuation of application No. 12/829,352, filed on Jul. 1, 2010, now Pat. No. 9,277,880, which is a continuation of application No. 12/534,827, filed on Aug. 3, 2009, now abandoned, and a continuation-in-part of application No. 12/497,528, filed on Jul. 2, 2009, now Pat. No. 8,577,431, which is a continuation-in-part of application No. 29/323,408, filed on Aug. 25, 2008, now Pat. No. Des. 606,659, and a continuation-in-part of application No. 29/323,409, filed on Aug. 25, 2008, now Pat. No. Des. 621,516, said application No. 12/829,352 is a continuation-in-part of application No. 12/497,523, filed on Jul. 2, 2009, now Pat. No. 8,437,825, and a continuation-in-part of application No. 29/323,408, filed on Aug. 25, 2008, now Pat. No. Des. 606,659, and a continuation-in-part of application No. 29/323,409, filed on Aug. 25, 2008, now Pat. No. Des. 621,516.

(60) Provisional application No. 61/086,060, filed on Aug. 4, 2008, provisional application No. 61/086,108, filed on Aug. 4, 2008, provisional application No. 61/086,063, filed on Aug. 4, 2008, provisional application No. 61/086,057, filed on Aug. 4, 2008, provisional application No. 61/091,732, filed on Aug. 25, 2008, provisional application No. 61/078,228, filed on Jul. 3, 2008, provisional application No. 61/078,207, filed on Jul. 3, 2008.

(52) **U.S. Cl.**
CPC ***A61B 5/14552*** (2013.01); ***A61B 5/6816*** (2013.01); ***A61B 5/6826*** (2013.01); ***A61B 5/6829*** (2013.01); ***A61B 5/6838*** (2013.01); ***A61B 5/6843*** (2013.01); *A61B 2562/0233* (2013.01); *A61B 2562/04* (2013.01); *A61B 2562/046* (2013.01); *A61B 2562/146* (2013.01)

(58) **Field of Classification Search**
CPC . A61B 5/6843; A61B 5/6826; A61B 5/14551; A61B 5/14552; A61B 5/14532; A61B 2562/046; A61B 2562/04; A61B 2562/0233; A61B 2562/146
See application file for complete search history.

(56) **References Cited**

U.S. PATENT DOCUMENTS

3,789,601	A	2/1974	Bergey
3,910,701	A	10/1975	Henderson et al.
4,015,595	A	4/1977	Benjamin
4,114,604	A	9/1978	Shaw et al.
4,129,124	A	12/1978	Thalmann
4,224,948	A	9/1980	Cramer et al.
4,258,719	A	3/1981	Lewyn
4,267,844	A	5/1981	Yamanishi
4,409,470	A	10/1983	Shepard et al.
4,438,338	A	3/1984	Stitt
4,444,471	A	4/1984	Ford et al.
4,447,150	A	5/1984	Heinemann
4,547,075	A	10/1985	Fei
4,653,498	A	3/1987	New, Jr. et al.
4,655,225	A	4/1987	Dahne et al.
4,684,245	A	8/1987	Goldring
4,709,413	A	11/1987	Forrest
4,755,676	A	7/1988	Gaalema et al.
4,759,369	A	7/1988	Taylor
4,781,195	A	11/1988	Martin
4,782,836	A	11/1988	Alt
4,802,486	A	2/1989	Goodman et al.
4,805,623	A	2/1989	Jöbsis
4,819,860	A	4/1989	Hargrove et al.
4,825,872	A	5/1989	Tan et al.
4,859,057	A	8/1989	Taylor et al.
4,865,038	A	9/1989	Rich et al.
4,867,557	A	9/1989	Takatani et al.
4,869,253	A	9/1989	Craig, Jr. et al.
4,880,304	A	11/1989	Jaeb et al.
4,903,701	A	2/1990	Moore et al.
4,928,692	A	5/1990	Goodman et al.
4,933,545	A	6/1990	Saaski et al.
4,938,218	A	7/1990	Goodman et al.
4,941,236	A	7/1990	Sherman et al.
4,945,239	A	7/1990	Wist et al.
4,955,379	A	9/1990	Hall
4,960,128	A	10/1990	Gordon et al.
4,960,314	A	10/1990	Smith et al.
4,964,408	A	10/1990	Hink et al.
5,007,423	A	4/1991	Branstetter et al.
5,025,791	A	6/1991	Niwa
5,028,787	A	7/1991	Rosenthal et al.
5,035,243	A	7/1991	Muz
5,041,187	A	8/1991	Hink et al.
5,043,820	A	8/1991	Wyles et al.
5,069,213	A	12/1991	Polczynski
5,069,214	A	12/1991	Samaras et al.
5,069,680	A	12/1991	Grandjean
5,077,476	A	12/1991	Rosenthal
5,086,229	A	2/1992	Rosenthal et al.
5,099,842	A	3/1992	Mannheimer et al.
5,109,849	A	5/1992	Goodman et al.
D326,715	S	6/1992	Schmidt
5,122,925	A	6/1992	Inpyn
5,131,391	A	7/1992	Sakai et al.
5,137,023	A	8/1992	Mendelson et al.
5,158,082	A	10/1992	Jones
5,158,091	A	10/1992	Butterfiled et al.
5,159,929	A	11/1992	McMillen et al.
5,163,438	A	11/1992	Gordon et al.
5,176,137	A	1/1993	Erickson et al.
5,190,038	A	3/1993	Polson et al.
5,203,329	A	4/1993	Takatani et al.
5,218,962	A	6/1993	Mannheimer et al.
5,222,295	A	6/1993	Dorris, Jr.
5,222,495	A	6/1993	Clarke et al.
5,222,496	A	6/1993	Clarke et al.
5,228,449	A	7/1993	Christ et al.
5,249,576	A	10/1993	Goldberger et al.
5,250,342	A	10/1993	Lang
5,251,011	A	10/1993	Fujiwara et al.
5,254,388	A	10/1993	Melby et al.
5,254,992	A	10/1993	Keen et al.
5,273,036	A	12/1993	Kronberg et al.
5,278,627	A	1/1994	Aoyagi et al.
5,297,548	A	3/1994	Pologe
5,319,355	A	6/1994	Russek
5,333,616	A	8/1994	Mills et al.
5,337,744	A	8/1994	Branigan
5,337,745	A	8/1994	Benaron
5,341,805	A	8/1994	Stavridi et al.
5,355,242	A	10/1994	Eastmond et al.
5,358,519	A	10/1994	Grandjean
5,362,966	A	11/1994	Rosenthal et al.
D353,195	S	12/1994	Savage et al.
D353,196	S	12/1994	Savage et al.

Masimo Ex. 1041
IPR Petition - US D962,936

(56) **References Cited**

U.S. PATENT DOCUMENTS

5,372,135 A 12/1994 Mendelson et al.
5,377,676 A 1/1995 Vari et al.
D356,870 S 3/1995 Ivers et al.
D359,546 S 6/1995 Savage et al.
5,427,093 A 6/1995 Ogawa et al.
5,431,170 A 7/1995 Mathews
5,436,499 A 7/1995 Namavar et al.
D361,840 S 8/1995 Savage et al.
5,437,275 A 8/1995 Amundsen et al.
5,441,054 A 8/1995 Tsuchiya
D362,063 S 9/1995 Savage et al.
5,452,717 A 9/1995 Branigan et al.
D363,120 S 10/1995 Savage et al.
5,456,252 A 10/1995 Vari et al.
5,462,051 A 10/1995 Oka et al.
5,479,934 A 1/1996 Imran
5,482,034 A 1/1996 Lewis et al.
5,482,036 A 1/1996 Diab et al.
5,490,505 A 2/1996 Diab et al.
5,490,506 A 2/1996 Takatani et al.
5,490,523 A 2/1996 Isaacson et al.
5,494,043 A 2/1996 O'Sullivan et al.
5,497,771 A 3/1996 Rosenheimer
5,511,546 A 4/1996 Hon
5,533,511 A 7/1996 Kaspari et al.
5,534,851 A 7/1996 Russek
5,542,146 A 8/1996 Hoekstra et al.
5,551,422 A 9/1996 Simonsen et al.
5,553,614 A 9/1996 Chance
5,553,615 A 9/1996 Carim et al.
5,553,616 A 9/1996 Ham et al.
5,555,882 A 9/1996 Richardson et al.
5,561,275 A 10/1996 Savage et al.
5,562,002 A 10/1996 Lalin
5,564,429 A 10/1996 Bornn et al.
5,581,069 A 12/1996 Shepard et al.
5,584,296 A 12/1996 Cui et al.
5,590,649 A 1/1997 Caro et al.
5,601,079 A 2/1997 Wong et al.
5,601,080 A 2/1997 Oppenheimer
5,602,924 A 2/1997 Durand et al.
D378,414 S 3/1997 Allen et al.
5,623,925 A 4/1997 Swenson et al.
5,625,458 A 4/1997 Alfano et al.
5,632,272 A 5/1997 Diab et al.
5,635,700 A 6/1997 Fazekas
5,638,816 A 6/1997 Kiani-Azarbayjany et al.
5,638,818 A 6/1997 Diab et al.
5,645,440 A 7/1997 Tobler et al.
5,671,914 A 9/1997 Kalkhoran et al.
5,676,143 A 10/1997 Simonsen et al.
5,685,299 A 11/1997 Diab et al.
5,687,717 A 11/1997 Halpern et al.
5,699,808 A 12/1997 John
5,702,429 A 12/1997 King
D390,666 S 2/1998 Lagerlof
5,719,557 A 2/1998 Rattman et al.
5,726,440 A 3/1998 Kalkhoran et al.
5,729,203 A 3/1998 Oka et al.
D393,830 S 4/1998 Tobler et al.
5,743,262 A 4/1998 Lepper, Jr. et al.
5,746,206 A 5/1998 Mannheimer et al.
5,746,697 A 5/1998 Swedlow et al.
5,747,806 A 5/1998 Khalil et al.
5,750,927 A 5/1998 Baltazar
5,750,994 A 5/1998 Schlager
5,752,914 A 5/1998 Delonzor et al.
5,758,644 A 6/1998 Diab et al.
5,760,910 A 6/1998 Lepper, Jr. et al.
5,766,131 A 6/1998 Kondo et al.
5,769,785 A 6/1998 Diab et al.
5,782,757 A 7/1998 Diab et al.
5,785,659 A 7/1998 Caro et al.
5,791,347 A 8/1998 Flaherty et al.
5,792,052 A 8/1998 Isaacson et al.
5,795,300 A 8/1998 Bryars
5,797,841 A 8/1998 Delonzor et al.
5,800,348 A 9/1998 Kaestle
5,800,349 A 9/1998 Isaacson et al.
5,807,247 A 9/1998 Merchant et al.
5,810,734 A 9/1998 Caro et al.
5,817,008 A 10/1998 Rafert et al.
5,823,950 A 10/1998 Diab et al.
5,826,885 A 10/1998 Helgeland
5,830,131 A 11/1998 Caro et al.
5,830,137 A 11/1998 Scharf
5,833,618 A 11/1998 Caro et al.
D403,070 S 12/1998 Maeda et al.
5,842,982 A 12/1998 Mannheimer
5,851,178 A 12/1998 Aronow
5,854,706 A 12/1998 Alb
5,860,919 A 1/1999 Kiani-Azarbayjany et al.
5,860,932 A 1/1999 Goto et al.
5,890,929 A 4/1999 Mills et al.
5,891,022 A 4/1999 Pologe
5,893,364 A * 4/1999 Haar A61B 5/0059 356/338
5,902,235 A 5/1999 Lewis et al.
5,903,357 A 5/1999 Colak
5,904,654 A 5/1999 Wohltmann et al.
5,911,689 A 6/1999 Smith et al.
5,919,134 A 7/1999 Diab
5,923,021 A 7/1999 Dvorkis et al.
5,924,979 A 7/1999 Swedlow et al.
5,934,925 A 8/1999 Tobler et al.
5,936,986 A 8/1999 Cantatore et al.
5,940,182 A 8/1999 Lepper, Jr. et al.
5,957,840 A 9/1999 Terasawa et al.
D414,870 S 10/1999 Saltzstein et al.
5,987,343 A 11/1999 Kinast
5,991,467 A 11/1999 Kamiko
5,995,855 A 11/1999 Kiani et al.
5,997,343 A 12/1999 Mills et al.
6,002,952 A 12/1999 Diab et al.
6,010,937 A 1/2000 Karam et al.
6,011,986 A 1/2000 Diab et al.
6,018,403 A 1/2000 Shirakura et al.
6,018,673 A 1/2000 Chin et al.
6,022,321 A 2/2000 Amano et al.
6,027,452 A 2/2000 Flaherty et al.
6,031,603 A 2/2000 Fine et al.
6,035,223 A 3/2000 Baker
6,036,642 A 3/2000 Diab et al.
6,040,578 A 3/2000 Malin et al.
6,041,247 A 3/2000 Weckstrom et al.
6,045,509 A 4/2000 Caro et al.
6,049,727 A 4/2000 Crothall
6,058,331 A 5/2000 King
6,066,204 A 5/2000 Haven
6,067,462 A 5/2000 Diab et al.
6,081,735 A 6/2000 Diab et al.
6,088,607 A 7/2000 Diab et al.
6,102,856 A 8/2000 Groff et al.
6,110,522 A 8/2000 Lepper, Jr. et al.
6,115,673 A 9/2000 Malin et al.
6,122,042 A 9/2000 Wunderman et al.
6,122,536 A 9/2000 Sun et al.
6,124,597 A 9/2000 Shehada
6,126,595 A 10/2000 Amano et al.
6,128,521 A 10/2000 Marro et al.
6,129,675 A 10/2000 Jay
6,133,871 A 10/2000 Krasner
6,144,866 A 11/2000 Miesel et al.
6,144,868 A 11/2000 Parker
6,151,516 A 11/2000 Kiani-Azarbayjany et al.
6,152,754 A 11/2000 Gerhardt et al.
6,157,850 A 12/2000 Diab et al.
6,165,005 A 12/2000 Mills et al.
6,167,258 A 12/2000 Schmidt et al.
6,167,303 A 12/2000 Thompson
6,172,743 B1 1/2001 Kley et al.
6,175,752 B1 1/2001 Say et al.
6,178,343 B1 1/2001 Bindszus et al.
6,181,958 B1 1/2001 Steuer et al.

Masimo Ex. 1041
IPR Petition - US D962,936

(56) **References Cited**

U.S. PATENT DOCUMENTS

6,184,521	B1	2/2001	Coffin, IV et al.
6,185,454	B1	2/2001	Thompson
6,192,261	B1	2/2001	Gratton et al.
6,198,951	B1	3/2001	Kosuda et al.
6,198,952	B1	3/2001	Miesel et al.
6,202,930	B1	3/2001	Plesko
6,206,830	B1	3/2001	Diab et al.
6,223,063	B1	4/2001	Chaiken et al.
6,226,539	B1	5/2001	Potratz
6,229,856	B1	5/2001	Diab et al.
6,232,609	B1	5/2001	Snyder et al.
6,236,872	B1	5/2001	Diab et al.
6,241,680	B1	6/2001	Miwa
6,241,683	B1	6/2001	Macklem et al.
6,241,684	B1	6/2001	Amano et al.
6,252,977	B1	6/2001	Salganicoff et al.
6,253,097	B1	6/2001	Aronow et al.
6,255,708	B1	7/2001	Sudharsanan et al.
6,256,523	B1	7/2001	Diab et al.
6,263,222	B1	7/2001	Diab et al.
6,270,223	B1	8/2001	Del Bon et al.
6,278,522	B1	8/2001	Lepper, Jr. et al.
6,278,889	B1	8/2001	Robinson
6,280,213	B1	8/2001	Tobler et al.
6,280,381	B1	8/2001	Malin et al.
6,285,896	B1	9/2001	Tobler et al.
6,293,915	B1	9/2001	Amano et al.
6,297,906	B1	10/2001	Allen et al.
6,297,969	B1	10/2001	Mottahed
6,301,493	B1	10/2001	Marro et al.
6,304,766	B1	10/2001	Colvin, Jr.
6,308,089	B1	10/2001	von der Ruhr et al.
6,317,627	B1	11/2001	Ennen et al.
6,321,100	B1	11/2001	Parker
D452,012	S	12/2001	Phillips
6,325,761	B1	12/2001	Jay
6,334,065	B1	12/2001	Al-Ali et al.
6,343,223	B1	1/2002	Chin et al.
6,343,224	B1	1/2002	Parker
6,345,194	B1	2/2002	Nelson et al.
6,349,228	B1	2/2002	Kiani et al.
6,351,217	B1	2/2002	Kuhn
6,353,750	B1	3/2002	Kimura et al.
6,356,203	B1	3/2002	Halleck et al.
6,356,774	B1	3/2002	Bernstein et al.
6,360,113	B1	3/2002	Dettling
6,360,114	B1	3/2002	Diab et al.
6,360,115	B1	3/2002	Greenwald et al.
D455,834	S	4/2002	Donars et al.
6,368,283	B1	4/2002	Xu et al.
6,371,921	B1	4/2002	Caro et al.
6,377,829	B1	4/2002	Al-Ali
6,388,240	B2	5/2002	Schulz et al.
6,393,311	B1	5/2002	Edgar et al.
6,396,873	B1	5/2002	Goldstein et al.
6,397,091	B2	5/2002	Diab et al.
6,398,727	B1	6/2002	Bui et al.
6,402,690	B1	6/2002	Rhee et al.
6,411,373	B1	6/2002	Garside et al.
6,415,166	B1	7/2002	Van Hoy et al.
6,415,167	B1	7/2002	Blank et al.
6,430,423	B2	8/2002	DeLonzor et al.
6,430,437	B1	8/2002	Marro
6,430,525	B1	8/2002	Weber et al.
D463,561	S	9/2002	Fukatsu et al.
6,463,187	B1	10/2002	Baruch et al.
6,463,311	B1	10/2002	Diab
6,470,199	B1	10/2002	Kopotic et al.
6,470,893	B1	10/2002	Boesen
6,473,008	B2	10/2002	Kelly et al.
6,475,153	B1	11/2002	Khair et al.
6,487,429	B2	11/2002	Hockersmith et al.
RE37,922	E	12/2002	Sharan
6,491,647	B1	12/2002	Bridger et al.
6,501,975	B2	12/2002	Diab et al.
6,505,059	B1	1/2003	Kollias et al.
6,515,273	B2	2/2003	Al-Ali
6,516,289	B2	2/2003	David et al.
6,519,487	B1	2/2003	Parker
6,522,521	B2	2/2003	Mizuno et al.
6,525,386	B1	2/2003	Mills et al.
6,526,300	B1	2/2003	Kiani et al.
6,527,729	B1	3/2003	Turcott
6,534,012	B1	3/2003	Hazen et al.
6,541,756	B2	4/2003	Schulz et al.
6,542,764	B1	4/2003	Al-Ali et al.
6,553,242	B1	4/2003	Sarussi
6,556,852	B1	4/2003	Schulze et al.
6,580,086	B1	6/2003	Schulz et al.
6,584,336	B1	6/2003	Ali et al.
6,587,196	B1	7/2003	Stippick et al.
6,587,199	B1	7/2003	Luu
6,595,316	B2	7/2003	Cybulski et al.
6,596,016	B1	7/2003	Vreman et al.
6,597,932	B2	7/2003	Tian et al.
6,597,933	B2	7/2003	Kiani et al.
6,606,509	B2	8/2003	Schmitt
6,606,511	B1	8/2003	Ali et al.
D481,459	S	10/2003	Nahm
6,632,181	B2	10/2003	Flaherty et al.
6,635,559	B2	10/2003	Greenwald et al.
6,636,759	B2	10/2003	Robinson
6,639,668	B1	10/2003	Trepagnier
6,639,867	B2	10/2003	Shim
6,640,116	B2	10/2003	Diab
6,640,117	B2	10/2003	Makarewicz et al.
6,643,530	B2	11/2003	Diab et al.
6,650,917	B2	11/2003	Diab et al.
6,650,939	B2	11/2003	Takpke, II et al.
6,654,624	B2	11/2003	Diab et al.
6,658,276	B2	12/2003	Kiani et al.
6,661,161	B1	12/2003	Lanzo et al.
6,668,185	B2	12/2003	Toida
6,671,526	B1	12/2003	Aoyagi et al.
6,671,531	B2	12/2003	Al-Ali et al.
6,678,543	B2	1/2004	Diab et al.
6,681,133	B2	1/2004	Chaiken et al.
6,684,090	B2	1/2004	Ali et al.
6,684,091	B2	1/2004	Parker
6,694,157	B1	2/2004	Stone et al.
6,697,656	B1	2/2004	Al-Ali
6,697,657	B1	2/2004	Shehada et al.
6,697,658	B2	2/2004	Al-Ali
RE38,476	E	3/2004	Diab et al.
6,699,194	B1	3/2004	Diab et al.
6,714,803	B1	3/2004	Mortz
6,714,804	B2	3/2004	Al-Ali et al.
RE38,492	E	4/2004	Diab et al.
6,721,582	B2	4/2004	Trepagnier et al.
6,721,585	B1	4/2004	Parker
6,725,075	B2	4/2004	Al-Ali
6,728,560	B2	4/2004	Kollias et al.
6,735,459	B2	5/2004	Parker
6,738,652	B2	5/2004	Mattu et al.
6,745,060	B2	6/2004	Diab et al.
6,748,254	B2	6/2004	O'Neil et al.
6,751,283	B2	6/2004	van de Haar
6,760,607	B2	7/2004	Al-Ali
6,770,028	B1	8/2004	Ali et al.
6,771,994	B2	8/2004	Kiani et al.
6,785,568	B2	8/2004	Chance
6,788,965	B2	9/2004	Ruchti et al.
6,792,300	B1	9/2004	Diab et al.
6,801,799	B2	10/2004	Mendelson
6,811,535	B2	11/2004	Palti et al.
6,813,511	B2	11/2004	Diab et al.
6,816,010	B2	11/2004	Seetharaman et al.
6,816,241	B2	11/2004	Grubisic et al.
6,816,741	B2	11/2004	Diab
6,822,564	B2	11/2004	Al-Ali
6,826,419	B2	11/2004	Diab et al.
6,830,711	B2	12/2004	Mills et al.
6,831,266	B2	12/2004	Paritsky et al.
6,850,787	B2	2/2005	Weber et al.

Masimo Ex. 1041
IPR Petition - US D962,936

(56) **References Cited**

U.S. PATENT DOCUMENTS

6,850,788	B2	2/2005	Al-Ali
6,852,083	B2	2/2005	Caro et al.
6,853,304	B2	2/2005	Reisman
D502,655	S	3/2005	Huang
6,861,639	B2	3/2005	Al-Ali
6,871,089	B2	3/2005	Korzinov et al.
6,876,931	B2	4/2005	Lorenz et al.
6,882,872	B2	4/2005	Uchida et al.
6,897,788	B2	5/2005	Khair et al.
6,898,452	B2	5/2005	Al-Ali et al.
6,912,413	B2	6/2005	Rantala et al.
6,920,345	B2	7/2005	Al-Ali et al.
D508,862	S	8/2005	Behar et al.
6,931,268	B1	8/2005	Kiani-Azarbayjany et al.
6,934,570	B2	8/2005	Kiani et al.
6,939,305	B2	9/2005	Flaherty et al.
6,943,348	B1	9/2005	Coffin, IV
6,950,687	B2	9/2005	Al-Ali
D510,625	S	10/2005	Widener et al.
6,956,649	B2	10/2005	Acosta et al.
6,961,598	B2	11/2005	Diab
6,970,792	B1	11/2005	Diab
6,979,812	B2	12/2005	Al-Ali
6,985,764	B2	1/2006	Mason et al.
6,990,364	B2	1/2006	Ruchti et al.
6,993,371	B2	1/2006	Kiani et al.
D514,461	S	2/2006	Harju
6,995,400	B2	2/2006	Mizuyoshi
6,996,427	B2	2/2006	Ali et al.
6,997,879	B1	2/2006	Turcott
6,998,247	B2	2/2006	Monfre et al.
6,999,685	B1	2/2006	Kawase et al.
6,999,904	B2	2/2006	Weber et al.
7,003,338	B2	2/2006	Weber et al.
7,003,339	B2	2/2006	Diab et al.
7,015,451	B2	3/2006	Dalke et al.
7,024,233	B2	4/2006	Ali et al.
7,026,619	B2	4/2006	Cranford
7,027,849	B2	4/2006	Al-Ali
7,030,749	B2	4/2006	Al-Ali
7,031,728	B2	4/2006	Beyer, Jr.
7,039,449	B2	5/2006	Al-Ali
7,041,060	B2	5/2006	Flaherty et al.
7,044,918	B2	5/2006	Diab
7,046,347	B1	5/2006	Amend et al.
7,047,054	B2	5/2006	Benni
7,048,687	B1	5/2006	Reuss et al.
7,060,963	B2	6/2006	Maegawa et al.
7,061,595	B2	6/2006	Cabuz et al.
7,062,307	B2	6/2006	Norris et al.
7,067,893	B2	6/2006	Mills et al.
D526,719	S	8/2006	Richie, Jr. et al.
7,088,040	B1	8/2006	Ducharme et al.
7,092,735	B2	8/2006	Osann, Jr.
7,092,757	B2	8/2006	Larson et al.
7,096,052	B2	8/2006	Mason et al.
7,096,054	B2	8/2006	Abdul-Hafiz et al.
7,107,706	B1	9/2006	Bailey, Sr. et al.
7,109,490	B2	9/2006	Fuchs et al.
7,113,815	B2	9/2006	O'Neil et al.
D529,616	S	10/2006	Deros et al.
7,130,672	B2	10/2006	Pewzner et al.
7,132,641	B2	11/2006	Schulz et al.
7,133,710	B2	11/2006	Acosta et al.
7,142,901	B2	11/2006	Kiani et al.
7,149,561	B2	12/2006	Diab
D535,031	S	1/2007	Barrett et al.
D537,164	S	2/2007	Shigemori et al.
7,186,966	B2	3/2007	Al-Ali
7,190,261	B2	3/2007	Al-Ali
7,215,984	B2	5/2007	Diab
7,215,986	B2	5/2007	Diab
7,220,254	B2	5/2007	Altshuler et al.
7,221,971	B2	5/2007	Diab
7,225,006	B2	5/2007	Al-Ali et al.
7,225,007	B2	5/2007	Al-Ali
RE39,672	E	6/2007	Shehada et al.
7,227,156	B2	6/2007	Colvin, Jr. et al.
7,228,166	B1	6/2007	Kawasaki et al.
7,230,227	B2	6/2007	Wilcken et al.
D547,454	S	7/2007	Hsieh
7,239,905	B2	7/2007	Kiani-Azarbayjany et al.
7,245,953	B1	7/2007	Parker
7,251,513	B2	7/2007	Kondoh et al.
D549,830	S	8/2007	Behar et al.
7,252,639	B2	8/2007	Kimura et al.
7,254,429	B2	8/2007	Schurman et al.
7,254,431	B2	8/2007	Al-Ali
7,254,433	B2	8/2007	Diab et al.
7,254,434	B2	8/2007	Schulz et al.
D550,364	S	9/2007	Glover et al.
D551,350	S	9/2007	Lorimer et al.
7,272,425	B2	9/2007	Al-Ali
7,274,955	B2	9/2007	Kiani et al.
D553,248	S	10/2007	Nguyen
D554,263	S	10/2007	Al-Ali
7,280,858	B2	10/2007	Al-Ali et al.
7,289,835	B2	10/2007	Mansfield et al.
7,292,883	B2	11/2007	De Felice et al.
7,295,866	B2	11/2007	Al-Ali
D562,985	S	2/2008	Brefka et al.
7,328,053	B1	2/2008	Diab et al.
7,332,784	B2	2/2008	Mills et al.
7,340,287	B2	3/2008	Mason et al.
7,341,559	B2	3/2008	Schulz et al.
7,343,186	B2	3/2008	Lamego et al.
D566,282	S	4/2008	Al-Ali et al.
D567,125	S	4/2008	Okabe et al.
7,355,512	B1	4/2008	Al-Ali
7,356,365	B2	4/2008	Schurman
7,365,923	B2	4/2008	Hargis et al.
D569,001	S	5/2008	Omaki
D569,521	S	5/2008	Omaki
7,371,981	B2	5/2008	Abdul-Hafiz
7,373,193	B2	5/2008	Al-Ali et al.
7,373,194	B2	5/2008	Weber et al.
7,376,453	B1	5/2008	Diab et al.
7,377,794	B2	5/2008	Al Ali et al.
7,377,899	B2	5/2008	Weber et al.
7,383,070	B2	6/2008	Diab et al.
7,395,158	B2	7/2008	Monfre et al.
7,395,189	B2	7/2008	Qing et al.
7,415,297	B2	8/2008	Al-Ali et al.
7,428,432	B2	9/2008	Ali et al.
7,438,683	B2	10/2008	Al-Ali et al.
7,440,787	B2	10/2008	Diab
7,454,240	B2	11/2008	Diab et al.
7,467,002	B2	12/2008	Weber et al.
7,469,157	B2	12/2008	Diab et al.
7,471,969	B2	12/2008	Diab et al.
7,471,971	B2	12/2008	Diab et al.
7,483,729	B2	1/2009	Al-Ali et al.
7,483,730	B2	1/2009	Diab et al.
7,489,958	B2	2/2009	Diab et al.
7,496,391	B2	2/2009	Diab et al.
7,496,393	B2	2/2009	Diab et al.
D587,657	S	3/2009	Al-Ali et al.
7,499,741	B2	3/2009	Diab et al.
7,499,835	B2	3/2009	Weber et al.
7,500,950	B2	3/2009	Al-Ali et al.
7,509,153	B2	3/2009	Blank et al.
7,509,154	B2	3/2009	Diab et al.
7,509,494	B2	3/2009	Al-Ali
7,510,849	B2	3/2009	Schurman et al.
7,514,725	B2	4/2009	Wojtczuk et al.
7,519,327	B2	4/2009	White
7,519,406	B2	4/2009	Blank et al.
7,526,328	B2	4/2009	Diab et al.
D592,507	S	5/2009	Wachman et al.
7,530,942	B1	5/2009	Diab
7,530,949	B2	5/2009	Al Ali et al.
7,530,955	B2	5/2009	Diab et al.
7,558,622	B2	7/2009	Tran
7,563,110	B2	7/2009	Al-Ali et al.

Masimo Ex. 1041
IPR Petition - US D962,936

(56) **References Cited**

U.S. PATENT DOCUMENTS

7,593,230	B2	9/2009	Abul-Haj et al.
7,596,398	B2	9/2009	Al-Ali et al.
7,601,123	B2	10/2009	Tweed et al.
7,606,606	B2	10/2009	Laakkonen
7,606,608	B2	10/2009	Blank et al.
D603,966	S	11/2009	Jones et al.
7,613,490	B2	11/2009	Sarussi et al.
7,618,375	B2	11/2009	Flaherty
7,620,674	B2	11/2009	Ruchti et al.
D606,659	S	12/2009	Kiani et al.
7,629,039	B2	12/2009	Eckerbom et al.
7,640,140	B2	12/2009	Ruchti et al.
7,647,083	B2	1/2010	Al-Ali et al.
D609,193	S	2/2010	Al-Ali et al.
7,656,393	B2	2/2010	King et al.
7,657,294	B2	2/2010	Eghbal et al.
7,657,295	B2	2/2010	Coakley et al.
7,657,296	B2	2/2010	Raridan et al.
7,658,613	B1	2/2010	Griffin et al.
7,676,253	B2	3/2010	Raridan, Jr.
7,683,926	B2	3/2010	Schechterman et al.
D614,305	S	4/2010	Al-Ali et al.
7,697,966	B2	4/2010	Monfre et al.
7,698,105	B2	4/2010	Ruchti et al.
7,698,909	B2	4/2010	Hannula et al.
RE41,317	E	5/2010	Parker
RE41,333	E	5/2010	Blank et al.
7,726,209	B2	6/2010	Ruotoistenmaki
7,729,733	B2	6/2010	Al-Ali et al.
7,734,320	B2	6/2010	Al-Ali
7,740,588	B1	6/2010	Sciarra
7,740,589	B2	6/2010	Maschke et al.
7,761,127	B2	7/2010	Al-Ali et al.
7,761,128	B2	7/2010	Al-Ali et al.
7,764,982	B2	7/2010	Dalke et al.
7,764,983	B2	7/2010	Mannheimer et al.
D621,516	S	8/2010	Kiani et al.
7,791,155	B2	9/2010	Diab
7,801,581	B2	9/2010	Diab
7,809,418	B2	10/2010	Xu
7,822,452	B2	10/2010	Schurman et al.
RE41,912	E	11/2010	Parker
7,844,313	B2	11/2010	Kiani et al.
7,844,314	B2	11/2010	Al-Ali
7,844,315	B2	11/2010	Al-Ali
7,862,523	B2	1/2011	Ruotoistenmaki
7,865,222	B2	1/2011	Weber et al.
7,869,849	B2	1/2011	Ollerdessen et al.
7,873,497	B2	1/2011	Weber et al.
7,880,606	B2	2/2011	Al-Ali
7,880,626	B2	2/2011	Al-Ali et al.
7,884,314	B2	2/2011	Hamada
7,891,355	B2	2/2011	Al-Ali et al.
7,894,868	B2	2/2011	Al-Ali et al.
7,899,506	B2	3/2011	Xu et al.
7,899,507	B2	3/2011	Al-Ali et al.
7,899,510	B2	3/2011	Hoarau
7,899,518	B2	3/2011	Trepagnier et al.
7,904,130	B2	3/2011	Raridan, Jr.
7,904,132	B2	3/2011	Weber et al.
7,909,772	B2	3/2011	Popov et al.
7,910,875	B2	3/2011	Al-Ali
7,918,779	B2	4/2011	Haber et al.
7,919,713	B2	4/2011	Al-Ali et al.
7,937,128	B2	5/2011	Al-Ali
7,937,129	B2	5/2011	Mason et al.
7,937,130	B2	5/2011	Diab et al.
7,941,199	B2	5/2011	Kiani
7,951,086	B2	5/2011	Flaherty et al.
7,957,780	B2	6/2011	Lamego et al.
7,962,188	B2	6/2011	Kiani et al.
7,962,190	B1	6/2011	Diab et al.
7,976,472	B2	7/2011	Kiani
7,988,637	B2	8/2011	Diab
7,990,382	B2	8/2011	Kiani
7,991,446	B2	8/2011	Ali et al.
8,000,761	B2	8/2011	Al-Ali
8,008,088	B2	8/2011	Bellott et al.
RE42,753	E	9/2011	Kiani-Azarbayjany et al.
8,019,400	B2	9/2011	Diab et al.
8,028,701	B2	10/2011	Al-Ali et al.
8,029,765	B2	10/2011	Bellott et al.
8,036,727	B2	10/2011	Schurman et al.
8,036,728	B2	10/2011	Diab et al.
8,040,758	B1	10/2011	Dickinson
8,044,998	B2	10/2011	Heenan
8,046,040	B2	10/2011	Ali et al.
8,046,041	B2	10/2011	Diab et al.
8,046,042	B2	10/2011	Diab et al.
8,048,040	B2	11/2011	Kiani
8,050,728	B2	11/2011	Al-Ali et al.
8,071,935	B2	12/2011	Besko et al.
RE43,169	E	2/2012	Parker
8,118,620	B2	2/2012	Al-Ali et al.
8,126,528	B2	2/2012	Diab et al.
8,126,531	B2	2/2012	Crowley
8,128,572	B2	3/2012	Diab et al.
8,130,105	B2	3/2012	Al-Ali et al.
8,145,287	B2	3/2012	Diab et al.
8,150,487	B2	4/2012	Diab et al.
8,165,662	B2	4/2012	Cinbis et al.
8,175,672	B2	5/2012	Parker
8,177,720	B2	5/2012	Nanba et al.
8,180,420	B2	5/2012	Diab et al.
8,182,443	B1	5/2012	Kiani
8,185,180	B2	5/2012	Diab et al.
8,190,223	B2	5/2012	Al-Ali et al.
8,190,227	B2	5/2012	Diab et al.
8,203,438	B2	6/2012	Kiani et al.
8,203,704	B2	6/2012	Merritt et al.
8,204,566	B2	6/2012	Schurman et al.
8,219,170	B2	7/2012	Hausmann et al.
8,219,172	B2	7/2012	Schurman et al.
8,224,411	B2	7/2012	Al-Ali et al.
8,228,181	B2	7/2012	Al-Ali
8,229,532	B2	7/2012	Davis
8,229,533	B2	7/2012	Diab et al.
8,233,955	B2	7/2012	Al-Ali et al.
8,244,325	B2	8/2012	Al-Ali et al.
8,244,326	B2	8/2012	Ninomiya et al.
8,255,026	B1	8/2012	Al-Ali
8,255,027	B2	8/2012	Al-Ali et al.
8,255,028	B2	8/2012	Al-Ali et al.
8,260,577	B2	9/2012	Weber et al.
8,265,723	B1	9/2012	McHale et al.
8,274,360	B2	9/2012	Sampath et al.
8,280,473	B2	10/2012	Al-Ali
8,289,130	B2	10/2012	Nakajima et al.
8,301,217	B2	10/2012	Al-Ali et al.
8,306,596	B2	11/2012	Schurman et al.
8,310,336	B2	11/2012	Muhsin et al.
8,315,683	B2	11/2012	Al-Ali et al.
RE43,860	E	12/2012	Parker
8,280,469	B2	12/2012	Baker, Jr.
8,332,006	B2	12/2012	Naganuma et al.
8,337,403	B2	12/2012	Al-Ali et al.
8,343,026	B2	1/2013	Gardiner et al.
8,346,330	B2	1/2013	Lamego
8,352,003	B2 *	1/2013	Sawada A61B 5/0261 600/310
8,353,842	B2	1/2013	Al-Ali et al.
8,355,766	B2	1/2013	MacNeish, III et al.
8,359,080	B2	1/2013	Diab et al.
8,364,223	B2	1/2013	Al-Ali et al.
8,364,226	B2	1/2013	Diab et al.
8,364,389	B2	1/2013	Dorogusker et al.
8,374,665	B2	2/2013	Lamego
8,374,825	B2	2/2013	Vock et al.
8,380,272	B2	2/2013	Barrett et al.
8,385,995	B2	2/2013	Al-Ali et al.
8,385,996	B2	2/2013	Smith et al.
8,388,353	B2	3/2013	Kiani et al.
8,399,822	B2	3/2013	Al-Ali
8,401,602	B2	3/2013	Kiani

Masimo Ex. 1041
IPR Petition - US D962,936

(56) **References Cited**

U.S. PATENT DOCUMENTS

8,405,608	B2	3/2013	Al-Ali et al.
8,414,499	B2	4/2013	Al-Ali et al.
8,418,524	B2	4/2013	Al-Ali
8,421,022	B2	4/2013	Rozenfeld
8,423,106	B2	4/2013	Lamego et al.
8,428,674	B2	4/2013	Duffy et al.
8,428,967	B2	4/2013	Olsen et al.
8,430,817	B1	4/2013	Al-Ali et al.
8,437,825	B2	5/2013	Dalvi et al.
8,452,364	B2	5/2013	Hannula et al.
8,455,290	B2	6/2013	Siskavich
8,457,703	B2	6/2013	Al-Ali
8,457,707	B2	6/2013	Kiani
8,463,349	B2	6/2013	Diab et al.
8,466,286	B2	6/2013	Bellot et al.
8,471,713	B2	6/2013	Poeze et al.
8,473,020	B2	6/2013	Kiani et al.
8,483,787	B2	7/2013	Al-Ali et al.
8,487,256	B2	7/2013	Kwong et al.
8,489,364	B2	7/2013	Weber et al.
8,496,595	B2	7/2013	Jornod
8,498,684	B2	7/2013	Weber et al.
8,504,128	B2	8/2013	Blank et al.
8,509,867	B2	8/2013	Workman et al.
8,515,509	B2	8/2013	Bruinsma et al.
8,515,511	B2	8/2013	Boutelle
8,515,515	B2	8/2013	McKenna et al.
8,523,781	B2	9/2013	Al-Ali
8,529,301	B2	9/2013	Al-Ali et al.
8,532,727	B2	9/2013	Ali et al.
8,532,728	B2	9/2013	Diab et al.
D692,145	S	10/2013	Al-Ali et al.
8,547,209	B2	10/2013	Kiani et al.
8,548,548	B2	10/2013	Al-Ali
8,548,549	B2	10/2013	Schurman et al.
8,548,550	B2	10/2013	Al-Ali et al.
8,560,032	B2	10/2013	Al-Ali et al.
8,560,034	B1	10/2013	Diab et al.
8,570,167	B2	10/2013	Al-Ali
8,570,503	B2	10/2013	Vo
8,571,617	B2	10/2013	Reichgott et al.
8,571,618	B1	10/2013	Lamego et al.
8,571,619	B2	10/2013	Al-Ali et al.
8,577,431	B2	11/2013	Lamego et al.
8,581,732	B2	11/2013	Al-Ali et al.
8,584,345	B2	11/2013	Al-Ali et al.
8,588,880	B2	11/2013	Abdul-Hafiz et al.
8,591,426	B2	11/2013	Onoe et al.
8,600,467	B2	12/2013	Al-Ali et al.
8,600,494	B2	12/2013	Schroeppel et al.
8,602,971	B2	12/2013	Farr
8,606,342	B2	12/2013	Diab
8,611,095	B2	12/2013	Kwong et al.
8,615,290	B2	12/2013	Lin et al.
8,626,255	B2	1/2014	Al-Ali et al.
8,630,691	B2	1/2014	Lamego et al.
8,634,889	B2	1/2014	Al-Ali et al.
8,641,631	B2	2/2014	Sierra et al.
8,652,060	B2	2/2014	Al-Ali
8,655,004	B2	2/2014	Prest et al.
8,663,107	B2	3/2014	Kiani
8,666,468	B1	3/2014	Al-Ali
8,667,967	B2	3/2014	Al-Ali et al.
8,668,643	B2	3/2014	Kinast
8,670,811	B2	3/2014	O'Reilly
8,670,814	B2	3/2014	Diab et al.
8,676,286	B2	3/2014	Weber et al.
8,682,407	B2	3/2014	Al-Ali
RE44,823	E	4/2014	Parker
RE44,875	E	4/2014	Kiani et al.
8,688,183	B2	4/2014	Bruinsma et al.
8,690,799	B2	4/2014	Telfort et al.
8,700,111	B2	4/2014	LeBoeuf et al.
8,700,112	B2	4/2014	Kiani
8,702,627	B2	4/2014	Telfort et al.
8,706,179	B2	4/2014	Parker
8,712,494	B1	4/2014	MacNeish, III et al.
8,715,206	B2	5/2014	Telfort et al.
8,718,735	B2	5/2014	Lamego et al.
8,718,737	B2	5/2014	Diab et al.
8,718,738	B2	5/2014	Blank et al.
8,720,249	B2	5/2014	Al-Ali
8,721,541	B2	5/2014	Al-Ali et al.
8,721,542	B2	5/2014	Al-Ali et al.
8,723,677	B1	5/2014	Kiani
8,740,792	B1	6/2014	Kiani et al.
8,754,776	B2	6/2014	Poeze et al.
8,755,535	B2	6/2014	Telfort et al.
8,755,856	B2	6/2014	Diab et al.
8,755,872	B1	6/2014	Marinow
8,760,517	B2	6/2014	Sarwar et al.
8,761,850	B2	6/2014	Lamego
8,764,671	B2	7/2014	Kiani
8,768,423	B2	7/2014	Shakespeare et al.
8,768,426	B2	7/2014	Haisley et al.
8,771,204	B2	7/2014	Telfort et al.
8,777,634	B2	7/2014	Kiani et al.
8,781,543	B2	7/2014	Diab et al.
8,781,544	B2	7/2014	Al-Ali et al.
8,781,549	B2	7/2014	Al-Ali et al.
8,788,003	B2	7/2014	Schurman et al.
8,790,268	B2	7/2014	Al-Ali
8,801,613	B2	8/2014	Al-Ali et al.
8,821,397	B2	9/2014	Al-Ali et al.
8,821,415	B2	9/2014	Al-Ali et al.
8,830,449	B1	9/2014	Lamego et al.
8,831,700	B2	9/2014	Schurman et al.
8,838,210	B2	9/2014	Wood et al.
8,840,549	B2	9/2014	Al-Ali et al.
8,847,740	B2	9/2014	Kiani et al.
8,849,365	B2	9/2014	Smith et al.
8,852,094	B2	10/2014	Al-Ali et al.
8,852,994	B2	10/2014	Wojtczuk et al.
8,868,147	B2	10/2014	Stippick et al.
8,868,150	B2	10/2014	Al-Ali et al.
8,870,792	B2	10/2014	Al-Ali et al.
8,886,271	B2	11/2014	Kiani et al.
8,888,539	B2	11/2014	Al-Ali et al.
8,888,701	B2	11/2014	LeBoeuf et al.
8,888,708	B2	11/2014	Diab et al.
8,892,180	B2	11/2014	Weber et al.
8,897,847	B2	11/2014	Al-Ali
8,909,310	B2	12/2014	Lamego et al.
8,911,377	B2	12/2014	Al-Ali
8,912,909	B2	12/2014	Al-Ali et al.
8,920,317	B2	12/2014	Al-Ali et al.
8,920,332	B2	12/2014	Hong et al.
8,921,699	B2	12/2014	Al-Ali et al.
8,922,382	B2	12/2014	Al-Ali et al.
8,929,964	B2	1/2015	Al-Ali et al.
8,929,967	B2	1/2015	Mao et al.
8,942,777	B2	1/2015	Diab et al.
8,948,834	B2	2/2015	Diab et al.
8,948,835	B2	2/2015	Diab
8,965,471	B2	2/2015	Lamego
8,983,564	B2	3/2015	Al-Ali
8,989,831	B2	3/2015	Al-Ali et al.
8,996,085	B2	3/2015	Kiani et al.
8,998,809	B2	4/2015	Kiani
9,005,129	B2	4/2015	Venkatraman et al.
9,028,429	B2	5/2015	Telfort et al.
9,037,207	B2	5/2015	Al-Ali et al.
9,060,721	B2	6/2015	Reichgott et al.
9,063,160	B2	6/2015	Stamler et al.
9,066,666	B2	6/2015	Kiani
9,066,680	B1	6/2015	Al-Ali et al.
9,072,437	B2	7/2015	Paalasmaa
9,072,474	B2	7/2015	Al-Ali et al.
9,078,560	B2	7/2015	Schurman et al.
9,081,889	B2	7/2015	Ingrassia, Jr. et al.
9,084,569	B2	7/2015	Weber et al.
9,095,316	B2	8/2015	Welch et al.
9,106,038	B2	8/2015	Telfort et al.
9,107,625	B2	8/2015	Telfort et al.

Masimo Ex. 1041
IPR Petition - US D962,936

(56) **References Cited**

U.S. PATENT DOCUMENTS

9,107,626	B2	8/2015	Al-Ali et al.
9,113,831	B2	8/2015	Al-Ali
9,113,832	B2	8/2015	Al-Ali
9,119,595	B2	9/2015	Lamego
9,131,881	B2	9/2015	Diab et al.
9,131,882	B2	9/2015	Al-Ali et al.
9,131,883	B2	9/2015	Al-Ali
9,131,917	B2	9/2015	Telfort et al.
9,138,180	B1	9/2015	Coverston et al.
9,138,182	B2	9/2015	Al-Ali et al.
9,138,192	B2	9/2015	Weber et al.
9,142,117	B2	9/2015	Muhsin et al.
9,153,112	B1	10/2015	Kiani et al.
9,153,121	B2	10/2015	Kiani et al.
9,161,696	B2	10/2015	Al-Ali et al.
9,161,713	B2	10/2015	Al-Ali et al.
9,167,995	B2	10/2015	Lamego et al.
9,176,141	B2	11/2015	Al-Ali et al.
9,186,102	B2	11/2015	Bruinsma et al.
9,192,312	B2	11/2015	Al-Ali
9,192,329	B2	11/2015	Al-Ali
9,192,351	B1	11/2015	Telfort et al.
9,195,385	B2	11/2015	Al-Ali et al.
9,210,566	B2	12/2015	Ziemianska et al.
9,211,072	B2	12/2015	Kiani
9,211,095	B1	12/2015	Al-Ali
9,218,454	B2	12/2015	Kiani et al.
9,226,696	B2	1/2016	Kiani
9,241,662	B2	1/2016	Al-Ali et al.
9,245,668	B1	1/2016	Vo et al.
9,259,185	B2	2/2016	Abdul-Hafiz et al.
9,267,572	B2	2/2016	Barker et al.
9,277,880	B2	3/2016	Poeze et al.
9,289,167	B2	3/2016	Diab et al.
9,295,421	B2	3/2016	Kiani et al.
9,307,928	B1	4/2016	Al-Ali et al.
9,311,382	B2	4/2016	Varoglu et al.
9,323,894	B2	4/2016	Kiani
D755,392	S	5/2016	Hwang et al.
9,326,712	B1	5/2016	Kiani
9,333,316	B2	5/2016	Kiani
9,339,220	B2	5/2016	Lamego et al.
9,339,236	B2	5/2016	Frix et al.
9,341,565	B2	5/2016	Lamego et al.
9,351,673	B2	5/2016	Diab et al.
9,351,675	B2	5/2016	Al-Ali et al.
9,357,665	B2	5/2016	Myers et al.
9,364,181	B2	6/2016	Kiani et al.
9,368,671	B2	6/2016	Wojtczuk et al.
9,370,325	B2	6/2016	Al-Ali et al.
9,370,326	B2	6/2016	McHale et al.
9,370,335	B2	6/2016	Al-Ali et al.
9,375,185	B2	6/2016	Ali et al.
9,386,953	B2	7/2016	Al-Ali
9,386,961	B2	7/2016	Al-Ali et al.
9,392,945	B2	7/2016	Al-Ali et al.
9,397,448	B2	7/2016	Al-Ali et al.
9,408,542	B1	8/2016	Kinast et al.
9,436,645	B2	9/2016	Al-Ali et al.
9,445,759	B1	9/2016	Lamego et al.
9,466,919	B2	10/2016	Kiani et al.
9,474,474	B2	10/2016	Lamego et al.
9,480,422	B2	11/2016	Al-Ali
9,480,435	B2	11/2016	Olsen
9,489,081	B2	11/2016	Anzures et al.
9,492,110	B2	11/2016	Al-Ali et al.
9,497,534	B2	11/2016	Prest et al.
9,510,779	B2	12/2016	Poeze et al.
9,517,024	B2	12/2016	Kiani et al.
9,526,430	B2	12/2016	Srinivas et al.
9,532,722	B2	1/2017	Lamego et al.
9,538,949	B2	1/2017	Al-Ali et al.
9,538,980	B2	1/2017	Telfort et al.
9,549,696	B2	1/2017	Lamego et al.
9,553,625	B2	1/2017	Hatanaka et al.
9,554,737	B2	1/2017	Schurman et al.
9,560,996	B2	2/2017	Kiani
9,560,998	B2	2/2017	Al-Ali et al.
9,566,019	B2	2/2017	Al-Ali et al.
9,579,039	B2	2/2017	Jansen et al.
9,591,975	B2	3/2017	Dalvi et al.
9,593,969	B2	3/2017	King
9,622,692	B2	4/2017	Lamego et al.
9,622,693	B2	4/2017	Diab
D788,312	S	5/2017	Al-Ali et al.
9,636,055	B2	5/2017	Al-Ali et al.
9,636,056	B2	5/2017	Al-Ali
9,649,054	B2	5/2017	Lamego et al.
9,651,405	B1	5/2017	Gowreesunker et al.
9,662,052	B2	5/2017	Al-Ali et al.
9,668,676	B2	6/2017	Culbert
9,668,679	B2	6/2017	Schurman et al.
9,668,680	B2	6/2017	Bruinsma et al.
9,668,703	B2	6/2017	Al-Ali
9,675,286	B2	6/2017	Diab
9,681,812	B2	6/2017	Presura
9,684,900	B2	6/2017	Motoki et al.
9,687,160	B2	6/2017	Kiani
9,693,719	B2	7/2017	Al-Ali et al.
9,693,737	B2	7/2017	Al-Ali
9,697,928	B2	7/2017	Al-Ali et al.
9,699,546	B2	7/2017	Qian et al.
9,700,249	B2	7/2017	Johnson et al.
9,716,937	B2	7/2017	Qian et al.
9,717,425	B2	8/2017	Kiani et al.
9,717,448	B2	8/2017	Frix et al.
9,717,458	B2	8/2017	Lamego et al.
9,723,997	B1	8/2017	Lamego
9,724,016	B1	8/2017	Al-Ali et al.
9,724,024	B2	8/2017	Al-Ali
9,724,025	B1	8/2017	Kiani et al.
9,730,640	B2	8/2017	Diab et al.
9,743,887	B2	8/2017	Al-Ali et al.
9,749,232	B2	8/2017	Sampath et al.
9,750,442	B2	9/2017	Olsen
9,750,443	B2	9/2017	Smith et al.
9,750,461	B1	9/2017	Telfort
9,752,925	B2	9/2017	Chu et al.
9,775,545	B2	10/2017	Al-Ali et al.
9,775,546	B2	10/2017	Diab et al.
9,775,570	B2	10/2017	Al-Ali
9,778,079	B1	10/2017	Al-Ali et al.
9,781,984	B2	10/2017	Baranski et al.
9,782,077	B2	10/2017	Lamego et al.
9,782,110	B2	10/2017	Kiani
9,787,568	B2	10/2017	Lamego et al.
9,788,735	B2	10/2017	Al-Ali
9,788,768	B2	10/2017	Al-Ali et al.
9,795,300	B2	10/2017	Al-Ali
9,795,310	B2	10/2017	Al-Ali
9,795,358	B2	10/2017	Telfort et al.
9,795,739	B2	10/2017	Al-Ali et al.
9,801,556	B2	10/2017	Kiani
9,801,588	B2	10/2017	Weber et al.
9,808,188	B1	11/2017	Perea et al.
9,814,418	B2	11/2017	Weber et al.
9,820,691	B2	11/2017	Kiani
9,833,152	B2	12/2017	Kiani et al.
9,833,180	B2	12/2017	Shakespeare et al.
9,838,775	B2	12/2017	Qian et al.
9,839,379	B2	12/2017	Al-Ali et al.
9,839,381	B1	12/2017	Weber et al.
9,847,002	B2	12/2017	Kiani et al.
9,847,749	B2	12/2017	Kiani et al.
9,848,800	B1	12/2017	Lee et al.
9,848,806	B2	12/2017	Al-Ali et al.
9,848,807	B2	12/2017	Lamego
9,848,823	B2	12/2017	Raghuram et al.
9,861,298	B2	1/2018	Eckerbom et al.
9,861,304	B2	1/2018	Al-Ali et al.
9,861,305	B1	1/2018	Weber et al.
9,866,671	B1	1/2018	Thompson et al.
9,867,575	B2	1/2018	Maani et al.
9,867,578	B2	1/2018	Al-Ali et al.

Masimo Ex. 1041
IPR Petition - US D962,936

(56) **References Cited**

U.S. PATENT DOCUMENTS

9,872,623	B2	1/2018	Al-Ali
9,876,320	B2	1/2018	Coverston et al.
9,877,650	B2	1/2018	Muhsin et al.
9,877,686	B2	1/2018	Al-Ali et al.
9,891,079	B2	2/2018	Dalvi
9,891,590	B2	2/2018	Shim et al.
9,895,107	B2	2/2018	Al-Ali et al.
9,898,049	B2	2/2018	Myers et al.
9,913,617	B2	3/2018	Al-Ali et al.
9,918,646	B2	3/2018	Singh Alvarado et al.
9,924,893	B2	3/2018	Schurman et al.
9,924,897	B1	3/2018	Abdul-Hafiz
9,936,917	B2	4/2018	Poeze et al.
9,943,269	B2	4/2018	Muhsin et al.
9,949,676	B2	4/2018	Al-Ali
9,952,095	B1	4/2018	Hotelling et al.
9,955,937	B2	5/2018	Telfort
9,965,946	B2	5/2018	Al-Ali
9,980,667	B2	5/2018	Kiani et al.
D820,865	S	6/2018	Muhsin et al.
9,986,919	B2	6/2018	Lamego et al.
9,986,952	B2	6/2018	Dalvi et al.
9,989,560	B2	6/2018	Poeze et al.
9,993,207	B2	6/2018	Al-Ali et al.
10,007,758	B2	6/2018	Al-Ali et al.
D822,215	S	7/2018	Al-Ali et al.
D822,216	S	7/2018	Barker et al.
10,010,276	B2	7/2018	Al-Ali et al.
10,024,655	B2	7/2018	Raguin et al.
10,032,002	B2	7/2018	Kiani et al.
10,039,080	B2	7/2018	Miller et al.
10,039,482	B2	8/2018	Al-Ali et al.
10,039,491	B2	8/2018	Thompson et al.
10,052,037	B2	8/2018	Kinast et al.
10,055,121	B2	8/2018	Chaudhri et al.
10,058,275	B2	8/2018	Al-Ali et al.
10,064,562	B2	9/2018	Al-Ali
10,066,970	B2	9/2018	Gowreesunker et al.
10,076,257	B2	9/2018	Lin et al.
10,078,052	B2	9/2018	Ness et al.
10,086,138	B1	10/2018	Novak, Jr.
10,092,200	B2	10/2018	Al-Ali et al.
10,092,244	B2	10/2018	Chuang et al.
10,092,249	B2	10/2018	Kiani et al.
10,098,550	B2	10/2018	Al-Ali et al.
10,098,591	B2	10/2018	Al-Ali et al.
10,098,610	B2	10/2018	Al-Ali et al.
10,111,591	B2	10/2018	Dyell et al.
D833,624	S	11/2018	Dejong et al.
10,117,587	B2	11/2018	Han
10,123,726	B2	11/2018	Al-Ali et al.
10,123,729	B2	11/2018	Dyell et al.
10,130,289	B2	11/2018	Al-Ali et al.
10,130,291	B2	11/2018	Schurman et al.
D835,282	S	12/2018	Barker et al.
D835,283	S	12/2018	Barker et al.
D835,284	S	12/2018	Barker et al.
D835,285	S	12/2018	Barker et al.
10,149,616	B2	12/2018	Al-Ali et al.
10,154,815	B2	12/2018	Al-Ali et al.
10,159,412	B2	12/2018	Lamego et al.
10,165,954	B2	1/2019	Lee
10,188,296	B2	1/2019	Al-Ali et al.
10,188,331	B1	1/2019	Kiani et al.
10,188,348	B2	1/2019	Al-Ali et al.
RE47,218	E	2/2019	Ali-Ali
RE47,244	E	2/2019	Kiani et al.
RE47,249	E	2/2019	Kiani et al.
10,194,847	B2	2/2019	Al-Ali
10,194,848	B1	2/2019	Kiani et al.
10,201,286	B2	2/2019	Waydo
10,201,298	B2	2/2019	Al-Ali et al.
10,205,272	B2	2/2019	Kiani et al.
10,205,291	B2	2/2019	Scruggs et al.
10,213,108	B2	2/2019	Al-Ali
10,215,698	B2	2/2019	Han et al.
10,219,706	B2	3/2019	Al-Ali
10,219,746	B2	3/2019	McHale et al.
10,219,754	B1	3/2019	Lamego
10,226,187	B2	3/2019	Al-Ali et al.
10,226,576	B2	3/2019	Kiani
10,231,657	B2	3/2019	Al-Ali et al.
10,231,670	B2	3/2019	Blank et al.
10,231,676	B2	3/2019	Al-Ali et al.
RE47,353	E	4/2019	Kiani et al.
10,247,670	B2	4/2019	Ness et al.
10,251,585	B2	4/2019	Al-Ali et al.
10,251,586	B2	4/2019	Lamego
10,255,994	B2	4/2019	Sampath et al.
10,258,265	B1	4/2019	Poeze et al.
10,258,266	B1	4/2019	Poeze et al.
10,265,024	B2	4/2019	Lee et al.
10,271,748	B2	4/2019	Al-Ali
10,278,626	B2	5/2019	Schurman et al.
10,278,648	B2	5/2019	Al-Ali et al.
10,279,247	B2	5/2019	Kiani
10,285,626	B1	5/2019	Kestelli et al.
10,292,628	B1	5/2019	Poeze et al.
10,292,657	B2	5/2019	Abdul-Hafiz et al.
10,292,664	B2	5/2019	Al-Ali
10,299,708	B1	5/2019	Poeze et al.
10,299,709	B2	5/2019	Perea et al.
10,299,720	B2	5/2019	Brown et al.
10,305,775	B2	5/2019	Lamego et al.
10,307,111	B2	6/2019	Muhsin et al.
10,325,681	B2	6/2019	Sampath et al.
10,327,337	B2	6/2019	Triman et al.
10,327,713	B2	6/2019	Barker et al.
10,332,630	B2	6/2019	Al-Ali
10,335,033	B2	7/2019	Al-Ali
10,335,068	B2	7/2019	Poeze et al.
10,335,072	B2	7/2019	Al-Ali et al.
10,342,470	B2	7/2019	Al-Ali et al.
10,342,487	B2	7/2019	Al-Ali et al.
10,342,497	B2	7/2019	Al-Ali et al.
10,349,895	B2	7/2019	Telfort et al.
10,349,898	B2	7/2019	Al-Ali et al.
10,354,504	B2	7/2019	Kiani et al.
10,357,206	B2	7/2019	Weber et al.
10,357,209	B2	7/2019	Al-Ali
10,366,787	B2	7/2019	Sampath et al.
10,368,787	B2	8/2019	Reichgott et al.
10,376,190	B1	8/2019	Poeze et al.
10,376,191	B1	8/2019	Poeze et al.
10,383,520	B2	8/2019	Wojtczuk et al.
10,388,120	B2	8/2019	Muhsin et al.
10,388,527	B2	8/2019	Togawa et al.
10,390,716	B2	8/2019	Shimuta
10,398,320	B2	9/2019	Kiani et al.
10,398,383	B2	9/2019	van Dinther et al.
10,405,804	B2	9/2019	Al-Ali
10,406,445	B2	9/2019	Vock et al.
10,413,666	B2	9/2019	Al-Ali et al.
10,416,079	B2	9/2019	Magnussen et al.
10,420,493	B2	9/2019	Al-Ali et al.
D864,120	S	10/2019	Forrest et al.
10,433,776	B2	10/2019	Al-Ali
10,441,181	B1	10/2019	Telfort et al.
10,441,196	B2	10/2019	Eckerbom et al.
10,448,844	B2	10/2019	Al-Ali et al.
10,448,871	B2	10/2019	Al-Ali
10,456,038	B2	10/2019	Lamego et al.
10,463,284	B2	11/2019	Al-Ali et al.
10,463,340	B2	11/2019	Telfort et al.
10,470,695	B2	11/2019	Al-Ali
10,471,159	B1	11/2019	Lapotko et al.
10,478,107	B2	11/2019	Kiani et al.
10,503,379	B2	12/2019	Al-Ali et al.
10,505,311	B2	12/2019	Al-Ali et al.
10,512,436	B2	12/2019	Muhsin et al.
10,524,671	B2	1/2020	Lamego
10,524,706	B2	1/2020	Telfort et al.
10,524,738	B2	1/2020	Olsen
10,531,811	B2	1/2020	Al-Ali et al.

Masimo Ex. 1041
IPR Petition - US D962,936

(56) **References Cited**

U.S. PATENT DOCUMENTS

10,531,819	B2	1/2020	Diab et al.
10,531,835	B2	1/2020	Al-Ali et al.
10,532,174	B2	1/2020	Al-Ali
10,537,285	B2	1/2020	Shreim et al.
10,542,903	B2	1/2020	Al-Ali et al.
10,548,561	B2	2/2020	Telfort et al.
10,555,678	B2	2/2020	Dalvi et al.
10,568,514	B2	2/2020	Wojtczuk et al.
10,568,553	B2	2/2020	O'Neil et al.
RE47,882	E	3/2020	Al-Ali
10,575,779	B2	3/2020	Poeze et al.
10,582,886	B2	3/2020	Poeze et al.
10,588,518	B2	3/2020	Kiani
10,588,553	B2	3/2020	Poeze et al.
10,588,554	B2	3/2020	Poeze et al.
10,588,556	B2	3/2020	Kiani et al.
10,595,747	B2	3/2020	Al-Ali et al.
10,608,817	B2	3/2020	Haider et al.
D880,477	S	4/2020	Forrest et al.
10,610,138	B2	4/2020	Poeze et al.
10,617,302	B2	4/2020	Al-Ali et al.
10,617,335	B2	4/2020	Al-Ali et al.
10,617,338	B2	4/2020	Poeze et al.
10,624,563	B2	4/2020	Poeze et al.
10,624,564	B1	4/2020	Poeze et al.
10,631,765	B1	4/2020	Poeze et al.
10,637,181	B2	4/2020	Al-Ali et al.
10,638,961	B2	5/2020	Al-Ali
10,646,146	B2	5/2020	Al-Ali
D887,548	S	6/2020	Abdul-Hafiz et al.
D887,549	S	6/2020	Abdul-Hafiz et al.
10,667,764	B2	6/2020	Ahmed et al.
10,687,743	B1	6/2020	Al-Ali
10,687,744	B1	6/2020	Al-Ali
10,687,745	B1	6/2020	Al-Ali
D890,708	S	7/2020	Forrest et al.
10,702,194	B1	7/2020	Poeze et al.
10,702,195	B1	7/2020	Poeze et al.
10,709,366	B1	7/2020	Poeze et al.
10,721,785	B2	7/2020	Al-Ali
10,722,159	B2	7/2020	Al-Ali
10,736,518	B2	8/2020	Al-Ali et al.
10,750,984	B2	8/2020	Pauley et al.
10,779,098	B2	9/2020	Iswanto et al.
2001/0034477	A1	10/2001	Mansfield et al.
2001/0034479	A1	10/2001	Ring et al.
2001/0039483	A1	11/2001	Brand et al.
2001/0056243	A1	12/2001	Ohsaki et al.
2002/0010401	A1	1/2002	Bushmakin et al.
2002/0045836	A1	4/2002	Alkawwas
2002/0058864	A1	5/2002	Mansfield et al.
2002/0099279	A1	7/2002	Pfeiffer et al.
2002/0111546	A1	8/2002	Cook et al.
2002/0133080	A1	9/2002	Apruzzese et al.
2002/0188210	A1	12/2002	Aizawa
2003/0013975	A1	1/2003	Kiani
2003/0018243	A1	1/2003	Gerhardt et al.
2003/0036690	A1	2/2003	Geddes et al.
2003/0078504	A1	4/2003	Rowe
2003/0088162	A1	5/2003	Yamamoto et al.
2003/0098969	A1	5/2003	Katz et al.
2003/0100840	A1	5/2003	Sugiura et al.
2003/0144582	A1	7/2003	Cohen et al.
2003/0156288	A1	8/2003	Barnum et al.
2003/0158501	A1	8/2003	Uchida et al.
2003/0212312	A1	11/2003	Coffin, IV et al.
2004/0054290	A1	3/2004	Chance
2004/0054291	A1	3/2004	Schulz et al.
2004/0106163	A1	6/2004	Workman, Jr. et al.
2004/0114783	A1	6/2004	Spycher et al.
2004/0132197	A1	7/2004	Zahniser et al.
2004/0133081	A1	7/2004	Teller et al.
2004/0138568	A1	7/2004	Lo et al.
2004/0152957	A1	8/2004	Stivoric et al.
2004/0220738	A1	11/2004	Nissila
2005/0020927	A1	1/2005	Blondeau et al.
2005/0054940	A1	3/2005	Almen
2005/0055276	A1	3/2005	Kiani et al.
2005/0075548	A1	4/2005	Al-Ali et al.
2005/0075553	A1	4/2005	Sakai et al.
2005/0116820	A1	6/2005	Goldreich
2005/0192490	A1	9/2005	Yamamoto et al.
2005/0197555	A1	9/2005	Mouradian et al.
2005/0234317	A1	10/2005	Kiani
2005/0276164	A1	12/2005	Amron
2005/0288592	A1	12/2005	Yamamoto
2006/0005944	A1	1/2006	Wang et al.
2006/0009607	A1	1/2006	Lutz et al.
2006/0009688	A1	1/2006	Lamego et al.
2006/0020180	A1	1/2006	Al-Ali
2006/0025659	A1	2/2006	Kiguchi et al.
2006/0041198	A1	2/2006	Kondoh et al.
2006/0073719	A1	4/2006	Kiani
2006/0089557	A1	4/2006	Grajales et al.
2006/0161054	A1	7/2006	Reuss et al.
2006/0182659	A1	8/2006	Unlu et al.
2006/0189871	A1	8/2006	Al-Ali et al.
2006/0217608	A1	9/2006	Fein et al.
2006/0226992	A1	10/2006	Al-Ali et al.
2006/0247531	A1	11/2006	Pogue et al.
2006/0253010	A1	11/2006	Brady et al.
2006/0258928	A1	11/2006	Ortner et al.
2006/0270919	A1	11/2006	Brenner
2007/0038049	A1	2/2007	Huang
2007/0055119	A1	3/2007	Lash et al.
2007/0073116	A1	3/2007	Kiani et al.
2007/0073117	A1	3/2007	Raridan
2007/0093786	A1	4/2007	Goldsmith et al.
2007/0100222	A1	5/2007	Mastrototaro et al.
2007/0106172	A1	5/2007	Abreu
2007/0145255	A1	6/2007	Nishikawa et al.
2007/0149864	A1	6/2007	Laakkonen
2007/0180140	A1	8/2007	Welch et al.
2007/0191691	A1	8/2007	Polanco
2007/0197886	A1	8/2007	Naganuma et al.
2007/0208395	A1	9/2007	Leclerc et al.
2007/0238955	A1	10/2007	Tearney et al.
2007/0244377	A1	10/2007	Cozad et al.
2007/0249916	A1	10/2007	Pesach et al.
2007/0260130	A1	11/2007	Chin
2007/0282178	A1	12/2007	Scholler et al.
2007/0293792	A1	12/2007	Sliwa et al.
2008/0004513	A1	1/2008	Walker et al.
2008/0015424	A1	1/2008	Bernreuter
2008/0031497	A1	2/2008	Kishigami et al.
2008/0064965	A1	3/2008	Jay et al.
2008/0076980	A1	3/2008	Hoarau
2008/0076993	A1	3/2008	Ostrowski
2008/0081966	A1	4/2008	Debreczeny
2008/0094228	A1	4/2008	Welch et al.
2008/0097172	A1	4/2008	Sawada et al.
2008/0122796	A1	5/2008	Jobs et al.
2008/0130232	A1	6/2008	Yamamoto
2008/0139908	A1	6/2008	Kurth
2008/0190436	A1	8/2008	Jaffe et al.
2008/0194932	A1	8/2008	Ayers et al.
2008/0221418	A1	9/2008	Al-Ali et al.
2008/0221426	A1	9/2008	Baker et al.
2008/0221463	A1	9/2008	Baker
2008/0242958	A1	10/2008	Al-Ali et al.
2008/0262325	A1	10/2008	Lamego
2008/0319290	A1	12/2008	Mao et al.
2009/0024013	A1	1/2009	Soller
2009/0030327	A1	1/2009	Chance
2009/0036759	A1	2/2009	Ault et al.
2009/0043180	A1	2/2009	Tschautscher et al.
2009/0093687	A1	4/2009	Telfort et al.
2009/0095926	A1	4/2009	MacNeish, III
2009/0129102	A1	5/2009	Xiao et al.
2009/0156918	A1	6/2009	Davis et al.
2009/0163775	A1	6/2009	Barrett et al.
2009/0163783	A1	6/2009	Mannheimer et al.
2009/0163787	A1	6/2009	Mannheimer et al.
2009/0177097	A1	7/2009	Ma et al.

Masimo Ex. 1041
IPR Petition - US D962,936

(56) **References Cited**

U.S. PATENT DOCUMENTS

2009/0187085 A1 7/2009 Pay
2009/0234206 A1 9/2009 Gaspard et al.
2009/0247885 A1 10/2009 Suzuki et al.
2009/0247984 A1 10/2009 Lamego et al.
2009/0259114 A1 10/2009 Johnson et al.
2009/0270699 A1 10/2009 Scholler et al.
2009/0275813 A1 11/2009 Davis
2009/0275844 A1 11/2009 Al-Ali
2009/0306487 A1 12/2009 Crowe et al.
2009/0326346 A1 12/2009 Kracker et al.
2010/0004518 A1 1/2010 Vo et al.
2010/0030040 A1 2/2010 Poeze et al.
2010/0030043 A1 2/2010 Kuhn
2010/0099964 A1 4/2010 O'Reilly et al.
2010/0113948 A1 5/2010 Yang et al.
2010/0130841 A1 5/2010 Ozawa et al.
2010/0210925 A1 8/2010 Holley et al.
2010/0234718 A1 9/2010 Sampath et al.
2010/0270257 A1 10/2010 Wachman et al.
2010/0305416 A1 12/2010 Bedard et al.
2011/0001605 A1 1/2011 Kiani et al.
2011/0003665 A1 1/2011 Burton et al.
2011/0004079 A1 1/2011 Al-Ali et al.
2011/0004106 A1 1/2011 Iwamiya et al.
2011/0028806 A1 2/2011 Merritt et al.
2011/0028809 A1 2/2011 Goodman
2011/0040197 A1 2/2011 Welch et al.
2011/0082711 A1 4/2011 Poeze et al.
2011/0085721 A1 4/2011 Guyon et al.
2011/0087081 A1 4/2011 Kiani et al.
2011/0105854 A1 5/2011 Kiani et al.
2011/0105865 A1 5/2011 Yu et al.
2011/0118561 A1 5/2011 Tari et al.
2011/0137297 A1 6/2011 Kiani et al.
2011/0172498 A1 7/2011 Olsen et al.
2011/0208015 A1 8/2011 Welch et al.
2011/0213212 A1 9/2011 Al-Ali
2011/0230733 A1 9/2011 Al-Ali
2011/0237911 A1 9/2011 Lamego et al.
2011/0245697 A1 10/2011 Miettinen
2012/0059267 A1 3/2012 Lamego et al.
2012/0078069 A1 3/2012 Melker
2012/0123231 A1 5/2012 O'Reilly
2012/0150052 A1 6/2012 Buchheim et al.
2012/0165629 A1 6/2012 Merritt et al.
2012/0179006 A1 7/2012 Jansen et al.
2012/0197093 A1 8/2012 LeBoeuf et al.
2012/0197137 A1 8/2012 Jeanne et al.
2012/0209084 A1 8/2012 Olsen et al.
2012/0226117 A1 9/2012 Lamego et al.
2012/0227739 A1 9/2012 Kiani
2012/0283524 A1 11/2012 Kiani et al.
2012/0296178 A1 11/2012 Lamego et al.
2012/0319816 A1 12/2012 Al-Ali
2012/0330112 A1 12/2012 Lamego et al.
2013/0018233 A1 1/2013 Cinbis et al.
2013/0023775 A1 1/2013 Lamego et al.
2013/0041591 A1 2/2013 Lamego
2013/0045685 A1 2/2013 Kiani
2013/0046204 A1 2/2013 Lamego et al.
2013/0060147 A1 3/2013 Welch et al.
2013/0085346 A1 4/2013 Lin et al.
2013/0096405 A1 4/2013 Garfio
2013/0096936 A1 4/2013 Sampath et al.
2013/0131474 A1 5/2013 Gu et al.
2013/0190581 A1 7/2013 Al-Ali et al.
2013/0197328 A1 8/2013 Diab et al.
2013/0204112 A1 8/2013 White et al.
2013/0211214 A1 8/2013 Olsen
2013/0243021 A1 9/2013 Siskavich
2013/0296672 A1 11/2013 O'Neil et al.
2013/0324808 A1 12/2013 Al-Ali et al.
2013/0331670 A1 12/2013 Kiani
2013/0338461 A1 12/2013 Lamego et al.
2013/0345921 A1 12/2013 Al-Ali et al.
2014/0012100 A1 1/2014 Al-Ali et al.
2014/0034353 A1 2/2014 Al-Ali et al.
2014/0051953 A1 2/2014 Lamego et al.
2014/0051955 A1 2/2014 Tiao et al.
2014/0058230 A1 2/2014 Abdul-Hafiz et al.
2014/0073887 A1 3/2014 Petersen et al.
2014/0073960 A1 3/2014 Rodriguez-Llorente et al.
2014/0077956 A1 3/2014 Sampath et al.
2014/0081100 A1 3/2014 Muhsin et al.
2014/0081175 A1 3/2014 Telfort
2014/0094667 A1 4/2014 Schurman et al.
2014/0100434 A1 4/2014 Diab et al.
2014/0107493 A1 4/2014 Yuen et al.
2014/0114199 A1 4/2014 Lamego et al.
2014/0120564 A1 5/2014 Workman et al.
2014/0121482 A1 5/2014 Merritt et al.
2014/0121483 A1 5/2014 Kiani
2014/0127137 A1 5/2014 Bellott et al.
2014/0129702 A1 5/2014 Lamego et al.
2014/0135588 A1 5/2014 Al-Ali et al.
2014/0142401 A1 5/2014 Al-Ali et al.
2014/0163344 A1 6/2014 Al-Ali
2014/0163402 A1 6/2014 Lamego et al.
2014/0166076 A1 6/2014 Kiani et al.
2014/0171146 A1 6/2014 Ma et al.
2014/0171763 A1 6/2014 Diab
2014/0180154 A1 6/2014 Sierra et al.
2014/0180160 A1 6/2014 Brown et al.
2014/0187973 A1 7/2014 Brown et al.
2014/0192177 A1 7/2014 Bartula et al.
2014/0194709 A1 7/2014 Al-Ali et al.
2014/0194711 A1 7/2014 Al-Ali
2014/0194766 A1 7/2014 Al-Ali et al.
2014/0206954 A1 7/2014 Yuen et al.
2014/0206963 A1 7/2014 Al-Ali
2014/0213864 A1 7/2014 Abdul-Hafiz et al.
2014/0221854 A1 8/2014 Wai
2014/0243627 A1 8/2014 Diab et al.
2014/0266790 A1 9/2014 Al-Ali et al.
2014/0275808 A1 9/2014 Poeze et al.
2014/0275871 A1 9/2014 Lamego et al.
2014/0275872 A1 9/2014 Merritt et al.
2014/0275881 A1 9/2014 Lamego et al.
2014/0276013 A1 9/2014 Muehlemann et al.
2014/0276116 A1 9/2014 Takahashi et al.
2014/0288400 A1 9/2014 Diab et al.
2014/0296664 A1 10/2014 Bruinsma et al.
2014/0303520 A1 10/2014 Telfort et al.
2014/0316217 A1 10/2014 Purdon et al.
2014/0316218 A1 10/2014 Purdon et al.
2014/0316228 A1 10/2014 Blank et al.
2014/0323825 A1 10/2014 Al-Ali et al.
2014/0323897 A1 10/2014 Brown et al.
2014/0323898 A1 10/2014 Purdon et al.
2014/0330098 A1 11/2014 Merritt et al.
2014/0330099 A1 11/2014 Al-Ali et al.
2014/0333440 A1 11/2014 Kiani
2014/0336481 A1 11/2014 Shakespeare et al.
2014/0343436 A1 11/2014 Kiani
2014/0357966 A1 12/2014 Al-Ali et al.
2014/0361147 A1 12/2014 Fei
2014/0378844 A1 12/2014 Fei
2015/0005600 A1 1/2015 Blank et al.
2015/0011907 A1 1/2015 Purdon et al.
2015/0018650 A1 1/2015 Al-Ali et al.
2015/0032029 A1 1/2015 Al-Ali et al.
2015/0065889 A1 3/2015 Gandelman et al.
2015/0073235 A1 3/2015 Kateraas et al.
2015/0073241 A1 3/2015 Lamego
2015/0080754 A1 3/2015 Purdon et al.
2015/0087936 A1 3/2015 Al-Ali et al.
2015/0094546 A1 4/2015 Al-Ali
2015/0099950 A1 4/2015 Al-Ali et al.
2015/0101844 A1 4/2015 Al-Ali et al.
2015/0106121 A1 4/2015 Muhsin et al.
2015/0119725 A1 4/2015 Martin et al.
2015/0173671 A1 6/2015 Paalasmaa et al.
2015/0196249 A1 7/2015 Brown et al.
2015/0216459 A1 8/2015 Al-Ali et al.

Masimo Ex. 1041
IPR Petition - US D962,936

(56) **References Cited**

U.S. PATENT DOCUMENTS

2015/0255001 A1 9/2015 Haughav et al.
2015/0257689 A1 9/2015 Al-Ali et al.
2015/0281424 A1 10/2015 Vock et al.
2015/0318100 A1 11/2015 Rothkopf et al.
2015/0351697 A1 11/2015 Weber et al.
2015/0351704 A1 12/2015 Kiani et al.
2015/0366472 A1 12/2015 Kiani
2015/0366507 A1 12/2015 Blank
2015/0374298 A1 12/2015 Al-Ali et al.
2015/0380875 A1 12/2015 Coverston et al.
2016/0000362 A1 1/2016 Diab et al.
2016/0007930 A1 1/2016 Weber et al.
2016/0019360 A1 1/2016 Pahwa et al.
2016/0022160 A1 1/2016 Pi et al.
2016/0023245 A1 1/2016 Zadesky et al.
2016/0029932 A1 2/2016 Al-Ali
2016/0029933 A1 2/2016 Al-Ali et al.
2016/0038045 A1 2/2016 Shapiro
2016/0041531 A1 2/2016 Mackie et al.
2016/0045118 A1 2/2016 Kiani
2016/0051157 A1 2/2016 Waydo
2016/0051158 A1 2/2016 Silva
2016/0051205 A1 2/2016 Al-Ali et al.
2016/0058302 A1 3/2016 Raghuram et al.
2016/0058309 A1 3/2016 Han
2016/0058310 A1 3/2016 Iijima
2016/0058312 A1 3/2016 Han et al.
2016/0058338 A1 3/2016 Schurman et al.
2016/0058356 A1 3/2016 Raghuram et al.
2016/0058370 A1 3/2016 Raghuram et al.
2016/0066823 A1 3/2016 Al-Ali et al.
2016/0066824 A1 3/2016 Al-Ali et al.
2016/0066879 A1 3/2016 Telfort et al.
2016/0071392 A1 3/2016 Hankey et al.
2016/0072429 A1 3/2016 Kiani et al.
2016/0073967 A1 3/2016 Lamego et al.
2016/0106367 A1 4/2016 Jorov et al.
2016/0113527 A1 4/2016 Al-Ali et al.
2016/0143548 A1 5/2016 Al-Ali
2016/0154950 A1 6/2016 Nakajima et al.
2016/0157780 A1 6/2016 Rimminen et al.
2016/0166210 A1 6/2016 Al-Ali
2016/0192869 A1 7/2016 Kiani et al.
2016/0196388 A1 7/2016 Lamego
2016/0197436 A1 7/2016 Barker et al.
2016/0213281 A1 7/2016 Eckerbom et al.
2016/0213309 A1 7/2016 Sannholm et al.
2016/0256058 A1 9/2016 Pham et al.
2016/0256082 A1 9/2016 Ely et al.
2016/0267238 A1 9/2016 Nag
2016/0270735 A1 9/2016 Diab et al.
2016/0283665 A1 9/2016 Sampath et al.
2016/0287107 A1 10/2016 Szabados et al.
2016/0287181 A1 10/2016 Han et al.
2016/0287786 A1 10/2016 Kiani
2016/0296173 A1 10/2016 Culbert
2016/0296174 A1 10/2016 Isikman et al.
2016/0310027 A1 10/2016 Han
2016/0314260 A1 10/2016 Kiani
2016/0327984 A1 11/2016 Al-Ali et al.
2016/0367173 A1 12/2016 Dalvi et al.
2016/0378069 A1 12/2016 Rothkopf
2016/0378071 A1 12/2016 Rothkopf
2017/0007183 A1 1/2017 Dusan et al.
2017/0010858 A1 1/2017 Prest et al.
2017/0014083 A1 1/2017 Diab et al.
2017/0024748 A1 1/2017 Haider
2017/0042488 A1 2/2017 Muhsin
2017/0055896 A1 3/2017 Al-Ali et al.
2017/0074897 A1 3/2017 Mermel et al.
2017/0084133 A1 3/2017 Cardinali et al.
2017/0086689 A1 3/2017 Shui et al.
2017/0086742 A1 3/2017 Harrison-Noonan et al.
2017/0086743 A1 3/2017 Bushnell et al.
2017/0094450 A1 3/2017 Tu et al.
2017/0143281 A1 5/2017 Olsen
2017/0147774 A1 5/2017 Kiani
2017/0164884 A1 6/2017 Culbert et al.
2017/0172435 A1 6/2017 Presura
2017/0172476 A1 6/2017 Schilthuizen
2017/0173632 A1 6/2017 Al-Ali
2017/0196464 A1 7/2017 Jansen et al.
2017/0196470 A1 7/2017 Lamego et al.
2017/0202505 A1 7/2017 Kirenko et al.
2017/0209095 A1 7/2017 Wagner et al.
2017/0228516 A1 8/2017 Sampath et al.
2017/0245790 A1 8/2017 Al-Ali et al.
2017/0248446 A1 8/2017 Gowreesunker et al.
2017/0251974 A1 9/2017 Shreim et al.
2017/0273619 A1 9/2017 Alvarado et al.
2017/0281024 A1 10/2017 Narasimhan et al.
2017/0293727 A1 10/2017 Klaassen et al.
2017/0311891 A1 11/2017 Kiani et al.
2017/0325698 A1 11/2017 Allec et al.
2017/0325744 A1 11/2017 Allec et al.
2017/0340209 A1 11/2017 Klaassen et al.
2017/0340219 A1 11/2017 Sullivan et al.
2017/0340293 A1 11/2017 Al-Ali et al.
2017/0347885 A1 12/2017 Tan et al.
2017/0354332 A1 12/2017 Lamego
2017/0354795 A1 12/2017 Blahnik et al.
2017/0358239 A1 12/2017 Arney et al.
2017/0358240 A1 12/2017 Blahnik et al.
2017/0358242 A1 12/2017 Thompson et al.
2017/0360306 A1 12/2017 Narasimhan et al.
2017/0366657 A1 12/2017 Thompson et al.
2018/0008146 A1 1/2018 Al-Ali et al.
2018/0014781 A1 1/2018 Clavelle et al.
2018/0025287 A1 1/2018 Mathew et al.
2018/0042556 A1 2/2018 Shahparnia et al.
2018/0049694 A1 2/2018 Singh Alvarado et al.
2018/0050235 A1 2/2018 Tan et al.
2018/0055375 A1 3/2018 Martinez et al.
2018/0055390 A1 3/2018 Kiani
2018/0055439 A1 3/2018 Pham et al.
2018/0056129 A1 3/2018 Narasimha Rao et al.
2018/0064381 A1 3/2018 Shakespeare et al.
2018/0070867 A1 3/2018 Smith et al.
2018/0078151 A1 3/2018 Allec et al.
2018/0078182 A1 3/2018 Chen et al.
2018/0082767 A1 3/2018 Al-Ali et al.
2018/0085068 A1 3/2018 Telfort
2018/0087937 A1 3/2018 Al-Ali et al.
2018/0103874 A1 4/2018 Lee et al.
2018/0103905 A1 4/2018 Kiani
2018/0110469 A1 4/2018 Maani et al.
2018/0125368 A1 5/2018 Lamego et al.
2018/0125430 A1 5/2018 Al-Ali et al.
2018/0132769 A1 5/2018 Weber et al.
2018/0146901 A1 5/2018 Al-Ali et al.
2018/0146902 A1 5/2018 Kiani et al.
2018/0153418 A1 6/2018 Sullivan et al.
2018/0153442 A1 6/2018 Eckerbom et al.
2018/0153446 A1 6/2018 Kiani
2018/0153448 A1 6/2018 Weber et al.
2018/0164853 A1 6/2018 Myers et al.
2018/0168491 A1 6/2018 Al-Ali et al.
2018/0184917 A1 7/2018 Kiani
2018/0192924 A1 7/2018 Al-Ali
2018/0192953 A1 7/2018 Shreim et al.
2018/0196514 A1 7/2018 Allec et al.
2018/0199871 A1 7/2018 Pauley et al.
2018/0206795 A1 7/2018 Al-Ali
2018/0206815 A1 7/2018 Telfort
2018/0213583 A1 7/2018 Al-Ali
2018/0214090 A1 8/2018 Al-Ali et al.
2018/0216370 A1 8/2018 Ishiguro et al.
2018/0218792 A1 8/2018 Muhsin et al.
2018/0225960 A1 8/2018 Al-Ali et al.
2018/0228414 A1 8/2018 Shao et al.
2018/0238718 A1 8/2018 Dalvi
2018/0238734 A1 8/2018 Hotelling et al.
2018/0242853 A1 8/2018 Al-Ali
2018/0242923 A1 8/2018 Al-Ali et al.

Masimo Ex. 1041
IPR Petition - US D962,936

(56) **References Cited**

U.S. PATENT DOCUMENTS

2018/0242926	A1	8/2018	Muhsin et al.
2018/0247353	A1	8/2018	Al-Ali et al.
2018/0247712	A1	8/2018	Muhsin et al.
2018/0256087	A1	9/2018	Al-Ali et al.
2018/0279956	A1	10/2018	Waydo et al.
2018/0285094	A1	10/2018	Housel et al.
2018/0296161	A1	10/2018	Shreim et al.
2018/0300919	A1	10/2018	Muhsin et al.
2018/0310822	A1	11/2018	Lndorf et al.
2018/0310823	A1	11/2018	Al-Ali et al.
2018/0317826	A1	11/2018	Muhsin
2018/0317841	A1	11/2018	Novak, Jr.
2018/0333055	A1	11/2018	Lamego et al.
2018/0333087	A1	11/2018	Al-Ali
2019/0000317	A1	1/2019	Muhsin et al.
2019/0015023	A1	1/2019	Monfre
2019/0029574	A1	1/2019	Schurman et al.
2019/0029578	A1	1/2019	Al-Ali et al.
2019/0058280	A1	2/2019	Al-Ali et al.
2019/0069813	A1	3/2019	Al-Ali
2019/0076028	A1	3/2019	Al-Ali et al.
2019/0082979	A1	3/2019	Al-Ali et al.
2019/0090760	A1	3/2019	Kinast et al.
2019/0090764	A1	3/2019	Al-Ali
2019/0117070	A1	4/2019	Muhsin et al.
2019/0117139	A1	4/2019	Al-Ali et al.
2019/0117141	A1	4/2019	Al-Ali
2019/0117930	A1	4/2019	Al-Ali
2019/0122763	A1	4/2019	Sampath et al.
2019/0133525	A1	5/2019	Al-Ali et al.
2019/0142283	A1	5/2019	Lamego et al.
2019/0142344	A1	5/2019	Telfort et al.
2019/0150856	A1	5/2019	Kiani et al.
2019/0167161	A1	6/2019	Al-Ali et al.
2019/0175019	A1	6/2019	Al-Ali et al.
2019/0192076	A1	6/2019	McHale et al.
2019/0200941	A1	7/2019	Chandran et al.
2019/0201623	A1	7/2019	Kiani
2019/0209025	A1	7/2019	Al-Ali
2019/0214778	A1	7/2019	Scruggs et al.
2019/0216319	A1	7/2019	Poeze et al.
2019/0216379	A1	7/2019	Al-Ali et al.
2019/0221966	A1	7/2019	Kiani et al.
2019/0223804	A1	7/2019	Blank et al.
2019/0231199	A1	8/2019	Al-Ali et al.
2019/0231241	A1	8/2019	Al-Ali et al.
2019/0231270	A1	8/2019	Abdul-Hafiz et al.
2019/0239787	A1	8/2019	Pauley et al.
2019/0239824	A1	8/2019	Muhsin et al.
2019/0254578	A1	8/2019	Lamego
2019/0261857	A1	8/2019	Al-Ali
2019/0269370	A1	9/2019	Al-Ali et al.
2019/0274627	A1	9/2019	Al-Ali et al.
2019/0274635	A1	9/2019	Al-Ali et al.
2019/0290136	A1	9/2019	Dalvi et al.
2019/0298270	A1	10/2019	Al-Ali et al.
2019/0304601	A1	10/2019	Sampath et al.
2019/0304605	A1	10/2019	Al-Ali
2019/0307377	A1	10/2019	Perea et al.
2019/0320906	A1	10/2019	Olsen
2019/0320959	A1	10/2019	Al-Ali
2019/0320988	A1	10/2019	Ahmed et al.
2019/0325722	A1	10/2019	Kiani et al.
2019/0350506	A1	11/2019	Al-Ali
2019/0357813	A1	11/2019	Poeze et al.
2019/0357823	A1	11/2019	Reichgott et al.
2019/0357824	A1	11/2019	Al-Ali
2019/0358524	A1	11/2019	Kiani
2019/0365294	A1	12/2019	Poeze et al.
2019/0374139	A1	12/2019	Kiani et al.
2019/0374173	A1	12/2019	Kiani et al.
2019/0374713	A1	12/2019	Kiani et al.
2019/0386908	A1	12/2019	Lamego et al.
2019/0388039	A1	12/2019	Al-Ali
2020/0000338	A1	1/2020	Lamego et al.
2020/0000415	A1	1/2020	Barker et al.
2020/0015716	A1	1/2020	Poeze et al.
2020/0021930	A1	1/2020	Iswanto et al.
2020/0037453	A1	1/2020	Triman et al.
2020/0037891	A1	2/2020	Kiani et al.
2020/0037966	A1	2/2020	Al-Ali
2020/0046257	A1	2/2020	Eckerbom et al.
2020/0054253	A1	2/2020	Al-Ali et al.
2020/0060591	A1	2/2020	Diab et al.
2020/0060628	A1	2/2020	Al-Ali et al.
2020/0060629	A1	2/2020	Muhsin et al.
2020/0060869	A1	2/2020	Telfort et al.
2020/0074819	A1	3/2020	Muhsin et al.
2020/0111552	A1	4/2020	Ahmed
2020/0113435	A1	4/2020	Muhsin
2020/0113488	A1	4/2020	Al-Ali et al.
2020/0113496	A1	4/2020	Scruggs et al.
2020/0113497	A1	4/2020	Triman et al.
2020/0113520	A1	4/2020	Abdul-Hafiz et al.
2020/0138288	A1	5/2020	Al-Ali et al.
2020/0138368	A1	5/2020	Kiani et al.
2020/0163597	A1	5/2020	Dalvi et al.
2020/0196877	A1	6/2020	Vo et al.
2020/0196882	A1	6/2020	Kiani et al.
2020/0221980	A1	7/2020	Poeze et al.
2020/0253474	A1	8/2020	Muhsin et al.
2020/0253544	A1	8/2020	Belur Nagaraj et al.
2020/0275841	A1	9/2020	Telfort et al.
2020/0288983	A1	9/2020	Telfort et al.

FOREIGN PATENT DOCUMENTS

CN	101564290	10/2009
CN	101484065	11/2011
CN	103906468	7/2014
EP	0102816	3/1984
EP	0419223	3/1991
EP	0630208	12/1994
EP	0665727	1/1997
EP	0760223	3/1997
EP	0770349	5/1997
EP	0781527	7/1997
EP	0880936	12/1998
EP	0922432	6/1999
EP	0985373	3/2000
EP	1518494	3/2005
EP	1526805	5/2005
EP	1124609	8/2006
EP	1860989	12/2007
EP	1875213	1/2008
EP	1880666	1/2008
EP	2165196	3/2010
EP	2277440	1/2011
GB	2243691	11/1991
JP	05-325705	12/1993
JP	08-185864	7/1996
JP	H09-173322	7/1997
JP	H 09257508	10/1997
JP	H 10314133	12/1998
JP	H 1170086	3/1999
JP	29193262	7/1999
JP	H11-197127	7/1999
JP	H 11235320	8/1999
JP	2001-066990	3/2001
JP	2001-087250	4/2001
JP	2002-500908	1/2002
JP	2003-024276	1/2003
JP	2003-508104	3/2003
JP	2003-265444	9/2003
JP	2004-329406	11/2004
JP	2004-344668	12/2004
JP	2005-160641	6/2005
JP	2005-270543	10/2005
JP	37411472	2/2006
JP	2006-102164	4/2006
JP	2006-177837	7/2006
JP	2006-198321	8/2006
JP	38033512	8/2006
JP	2006-296564	11/2006

Masimo Ex. 1041
IPR Petition - US D962,936

(56) **References Cited**

FOREIGN PATENT DOCUMENTS

JP	2007-389463	11/2007
JP	2007-319232	12/2007
JP	2008-099222	4/2008
JP	2009-106373	5/2009
JP	2011-147746	8/2011
JP	2013-515528	5/2013
JP	5756752	6/2015
KR	20070061122	6/2007
KR	100755079	9/2007
KR	20100091592	8/2010
WO	WO 93/012712	7/1993
WO	WO 94/23643	10/1994
WO	WO 1995/000070	1/1995
WO	WO 1996/27325	9/1996
WO	WO 1996/41566	12/1996
WO	WO 1997/009923	3/1997
WO	WO 99/000053	1/1999
WO	WO 99/001704	7/1999
WO	WO 1999/063883	12/1999
WO	WO 00/18290	4/2000
WO	WO 00/25112	5/2000
WO	WO 2000/028892	5/2000
WO	WO 01/09589	2/2001
WO	WO 01/50433	7/2001
WO	WO 2002/062213	8/2002
WO	WO 2005/094667	10/2005
WO	WO 2006/016366	2/2006
WO	WO 2006/017117	2/2006
WO	WO 2006/060949	6/2006
WO	WO 2006/079862	8/2006
WO	WO 2006/090371	8/2006
WO	WO 2006/113070	10/2006
WO	WO 2007/004083	1/2007
WO	WO 2007/017266	2/2007
WO	WO 2007/048039	4/2007
WO	WO 2007/144817	12/2007
WO	WO 2008/002405	1/2008
WO	WO 2008/107238	9/2008
WO	WO 2008/149081	12/2008
WO	WO 2009/001988	12/2008
WO	WO 2009/137524	11/2009
WO	WO 2010/003134	1/2010
WO	WO 2011/051888	5/2011
WO	WO 2011/069122	6/2011
WO	WO 2013/030744	3/2013
WO	WO 2013/106607	7/2013
WO	WO 2013/181368	12/2013
WO	WO 2014/115075	7/2014
WO	WO 2014/149781	9/2014
WO	WO 2014/153200	9/2014
WO	WO 2014/158820	10/2014
WO	WO 2014/178793	11/2014
WO	WO 2014/184447	11/2014
WO	WO 2015/187732	12/2015
WO	WO 2016/066312	5/2016

OTHER PUBLICATIONS

A. C. M. Dassel et al., "Reflectance Pulse Oximetry at the Forehead Improves by Pressure on the Probe," Journal of Clinical Monitoring, vol. 11, No. 4, Jul. 1995, pp. 237-244.

A. Tura et al., "A Wearable Device with Wireless Bluetooth-based Data Transmission," Measurement Science Review, vol. 3, Sec. 2, 2003, pp. 1-4.

Akira Sakane et al., "Estimating Arterial Wall Impedance using a Plethysmogram," IEEE 2003, pp. 580-585.

B. McGarry et al., "Reflections on a candidate design of the user-interface for a wireless vital-signs monitor," Proceedings of DARE 2000 on Designing Augmented Reality Environments, Jan. 2000, pp. 33-40.

B.-H. Yang et al., "Development of the ring sensor for healthcare automation," Robotics and Autonomous Systems, 2000, pp. 273-281.

B-H. Yang et al., "A Twenty-Four Hour Tele-Nursing System Using a Ringer Sensor," Proceedings of 1998 IEEE International Conference on Robotics and Automation, May 16-20, 1998, 6 pages.

B-S. Lin et al., "RTWPMS: A Real-Time Wireless Physiological Monitoring System," IEEE Transactions on Information Technology in Biomedicine, vol. 10, No. 4, Oct. 2006, pp. 647-656.

Burritt, Mary F.; Current Analytical Approaches to Measuring Blood Analytes; vol. 36; No. 8(B); 1990.

C. J. Pujary, "Investigation of Photodetector Optimization in Reducing Power Consumption by a Noninvasive Pulse Oximeter Sensor," Worcester Polytechnic Institute, Jan. 16, 2004, 133 pages.

C. Pujary et al.,"Photodetector Size Considerations in the Design of a Noninvasive Reflectance Pulse Oximeter for Telemedicine Applications," Proceedings of IEEE Annual Northeast Bioengineering Conference, 2003, pp. 148-149.

C. W. Mundt et al., "A Multiparameter Wearable Physiologic Monitoring System for Space and Terrestrial Applications," IEEE Transactions on Information Technology in Biomedicine, vol. 9, No. 3, Sep. 2005, pp. 382-391.

D. C. Zheng and Y. T. Zhang, "A ring-type device for the noninvasive measurement of arterial blood pressure," Proceedings of the 25th Annual International Conference of the IEEE Engineering in Medicine and Biology Society (IEEE Cat. No. 03CH37439), Sep. 17-21, 2003, Cancun, pp. 3184-3187 vol. 4.

D. Konstantas et al., "Mobile Patient Monitoring: The MobiHealth System," In Proceedings of International Conference on Medical and Care Compunetics, NCC'04, Feb. 2004, 8 pages.

D. Marculescu et al., "Ready to Ware," IEEE Spectrum, vol. 40, Issue 10, Oct. 2003, pp. 28-32.

E. Higurashi et al., "An integrated laser blood flowmeter," Journal of Lightwave Technology, vol. 21, No. 3, pp. 591-595, Mar. 2003.

Eiji Higurashi et al., "Hybrid integration technologies for optical micro-systems", Proc. SPIE 5604, Optomechatronic Micro/Nano Components, Devices, and Systems, Oct. 25, 2004, pp. 67-73.

European Office Action issued in Application No. 09791157.2, dated Jun. 20, 2016.

European Office Action issued in application No. 10763901.5 dated Jan. 11, 2013.

European Office Action issued in application No. 10763901.5 dated Aug. 6, 2015.

European Office Action issued in application No. 10763901.5 dated Aug. 27, 2014.

Fabio Buttussi et al.,"MOPET: A context-aware and user-adaptive wearable system for fitness training," Artificial Intelligence in Medicine 42, 2008, pp. 153-163.

G. Comtois et al., "A Noise Reference Input to an Adaptive Filter Algorithm for Signal Processing in a Wearable Pulse Oximeter," IEEE, 2007, pp. 106-107.

G. Comtois, "A Comparative Evaluation of Adaptive Noise Cancellation Algorithms for Minimizing Motion Artifacts in a Forehead-Mounted Wearable Pulse Oximeter," Proceedings of the 29th Annual international Conference of the IEEE EMBS, Aug. 23-26, 2007, pp. 1528-1531.

G. Tamannagari, "Power Efficient Design of Finder-Ring Sensor for Patient Monitoring," Master of Science in Electrical Engineering, The University of Texas at San Antonio, College of Engineering, Department of Electrical Engineering, Dec. 2008, 74 pages.

H.H. Asada et al., "Mobile Monitoring with Wearable Photoplethysmographic Biosensors," IEEE Engineering in Medicine and Biology Magazine, May/Jun. 2003, pp. 28-40.

Hall, et al., Jeffrey W.; Near-Infrared Spectrophotometry: A New Dimension in Clinical Chemistry; vol. 38; No. 9; 1992.

http://amivital.ugr.es/blog/?tag+spo2; Monitorizacion de la hemoglobina...y mucho mas, printed on Aug. 20, 2009.

http://blogderoliveira.blogspot.com/2008_02_01_archive.html; Ricardo Oliveira, printed on Aug. 20, 2009.

http://www.masimo.com/generalFloor/system.htm; Masimo Patient SafetyNet System at a Glance, printed on Aug. 20, 2009.

http://www.masimo.com/partners/GRASEBY.htm; Graseby Medical Limited, printed on Aug. 20, 2009.

http://www.masimo.com/PARTNERS/WELCHALLYN.htm; Welch Allyn Expands Patient Monitor Capabilities with Masimo Pulse Oximetry Technology, printed on Aug. 20, 2009.

Masimo Ex. 1041
IPR Petition - US D962,936

(56) **References Cited**

OTHER PUBLICATIONS

http://www.masimo.com/pulseOximeter/PPO.htm; Masimo Personal Pulse Oximeter, printed on Aug. 20, 2009.
http://www.masimo.com/pulseOximeter/Rad5.htm; Signal Extraction Pulse Oximeter, printed on Aug. 20, 2009.
http://www.masimo.com/rad-57/; Noninvasive Measurement of Methemoglobin, Carboxyhemoglobin and Oxyhemoglobin in the blood. Printed on Aug. 20, 2009.
http://www.masimo.com/rainbow/pronto.htm Noninvasive & Immediate Hemoglobin Testing, printed on Aug. 20, 2009.
http://www.masimo.com/spco/; Carboxyhemoglobin Noninvasive > Continuous > Immediate, printed on Aug. 20, 2009.
International Preliminary Report on Patentability and Written Opinion for International Application No. PCT/US2016/040190, dated Jan. 2, 2018, in 7 pages.
International Preliminary Report on Patentability and Written Opinion of the International Searching Authority issued in Application No. PCT US2009/049638, dated Jan. 5, 2011 in 9 pages.
International Preliminary Report on Patentability and Written Opinion of the International Searching Authority issued in Application No. PCT/US2009/052756, dated Feb. 8, 2011 in 8 pages.
International Search Report and Written Opinion for PCT/US2009/049638, dated Jan. 7, 2010.
International Search Report issued in Application No. PCT/US2009/052756, dated Feb. 10, 2009 in 14 pages.
International Search Report, App. No. PCT/US2010/047899, Date of Actual Completion of Search: Jan. 26, 2011, 4 pages.
J Kraitl et al., "An optical device to measure blood components by a photoplethysmographic method," Journal of Optics A: Pure and Applied Optics. 7, 2005, pp. S318-S324.
J. A. Tamada et al., "Noninvasive Glucose Monitoring: Comprehensive Clinical Results," JAMA, Nov. 17, 1999, vol. 282, No. 19, pp. 1839-1844.
J. C. D. Conway et al., "Wearable computer as a multi-parametric monitor for physiological signals," Proceedings IEEE International Symposium on Bio-Informatics and Biomedical Engineering, Arlington, VA, USA, 2000, pp. 236-242.
Japanese Notice of Allowance, re JP Application No. 2011-516895, dated May 12, 2015, no translation.
Japanese Office Action, re JP Application No. 2011-516895, dated Sep. 2, 2014, with translation.
K. Nakajima et al., "Monitoring of heart and respiratory rates by photoplethysmography using digital filtering technique," Med. Eng. Phy. vol. 18, No. 5, pp. 365-372, 1996.
Kanukurthy et al., "Data Acquisition Unit for an Implantable Multi-Channel Optical Glucose Sensor", Electro/Information Technology Conference, Chicago, IL, USA, May 17-20, 2007, pp. 1-6.
Konig et al., "Reflectance Pulse Oximetry—Principles and Obstetric Application in the Zurich System", Journal of Clinical Monitoring and Computing, vol. 14, No. 6, Aug. 1998, pp. 403-412.
Kuenstner, et al., J. Todd; Measurement of Hemoglobin in Unlysed Blood by Near-Infrared Spectroscopy; vol. 48; No. 4, 1994.
L. Grajales et al., "Wearable multisensor heart rate monitor," International Workshop on Wearable and Implantable Body Sensor Networks (BSN'06), Cambridge, MA, 2006, pp. 4-157.
L. Xu et al., "An integrated wrist-worn routine monitoring system for the elderly using BSN," 2008 5th International Summer School and Symposium on Medical Devices and Biosensors, Hong Kong, 2008, pp. 45-48.
Laukkanen RM et al., "Heart Rate Monitors: State of the Art," Journal of Sports Science, Jan. 1998, pp. S3-S7.
M. Savage et al., "Optimizing Power Consumption in the Design of a Wearable Wireless Telesensor: Comparison of Pulse Oximeter Modes," Proceedings of IEEE 29th Annual Nonheust Bioengineering Conference, 2003, pp. 150-151.
M. Yamashita etal., "Development of a Ring-Type Vital Sign Telemeter," Biotelemetry XIII, Mar. 26-31, 1995, pp. 145-150.
Manzke, et al., B., Multi Wavelength Pulse Oximetry in the Measurement of Hemoglobin Fractions; SPIE, vol. 2676, Apr. 24, 1996.
Mendelson et al., "A Mobile PDA-Based Wireless Pulse Oximeter," Proceedings of the IASTED International Conference Telehealth, Jul. 19-21, 2005, pp. 1-6.
Mendelson et al., "A Wearable Reflectance Pulse Oximeter for Remote Physiological Monitoring," Proceedings of the 28th IEEE EMBS Annual International Conference, Aug. 30-Sep. 3, 2006, pp. 912-915.
Mendelson et al., "Accelerometery-Based Adaptive Noise Cancellation for Remote Physiological Monitoring by a Wearable Pulse Oximeter," Proceedings of the 3rd IASTED International Conference TELEHEALTH, May 31-Jun. 1, 2007, pp. 28-33.
Mendelson et al., "Measurement Site and Photodetector Size Considerations in Optimizing Power Consumption of a Wearable Reflectance Pulse Oximeter," Proceedings of the 25th Annual International Conference of the IEEE EMBS, Sep. 17-21, 2003, pp. 3016-3019.
Mendelson et al., "Minimization of LED Power Consumption in the Design of a Wearable Pulse Oximeter," Proceedings of the IASTED International Conference Biomedical Engineering, Jun. 25-27, 2003, 6 pages.
N. Townsend, "Pulse Oximetry," Medical Electronics, 2001, pp. 32-42.
Naumenko, E. K.; Choice of Wavelengths for Stable Determination of Concentrations of Hemoglobin Derivatives from Absorption Spectra of Erythrocytes; vol. 63; No. 1; pp. 60-66 Jan.-Feb. 1996; Original article submitted Nov. 3, 1994.
Nonin Medical, Inc., "Operator's Manual—Models 8600F0 and 8600F0M Pulse Oximeters," 2005, 25 pages.
Nuria Oliver et al., "HealthGear: A Real-time Wearable System for Monitoring and Analyzing Physiological Signals," Proceedings of the International Workshop on Wearable and Implantable Body Sensor Networks 2006 IEEE, pp. 1-4.
P. Branche et al., "Signal Quality and Power Consumption of a New Prototype Reflectance Pulse Oximeter Sensor," Proceeding of the 31th Annual Northeast Bioengineering Conference, Hoboken, NJ, IEEE, 2005, pp. 1-2.
P. C. Branche et al., "Measurement Reproducibility and Sensor Placement Considerations in Designing a Wearable Pulse Oximeter for Military Applications," IEEE, 2004, pp. 216-217.
P. Celka et al., "Motion Resistant Earphone Located Infrared Based Hearth Rate Measurement Device," In Proceeding of the 2nd International Conference on Biomedical Engineering, Innsbruck, Austria, Feb. 16-18, 2004, pp. 582-585.
P. Lukowicz et al., "AMON: A Wearable Medical Computer for High Risk Patient," Proceedings of the 6th International Symposium on Wearable Computers (ISWC'02), 2002, pp. 1-2.
P. Lukowicz et al., "The WearARM Modular, Low-Power Computing Core," IEEE Micro, May-Jun. 2001, pp. 16-28.
P. Renevey et al., "Wrist-Located Pulse Detection Using IR Signals, Activity and Nonlinear Artifact Cancellation," Proceedings of the 23rd Annual EMBS International Conference, Oct. 25-28, 2001, pp. 3030-3033.
P. Shaltis et al., "Novel Design for a Wearable, Rapidly Depolyable, Wireless Noninvasive Triage Sensor," Proceedings of the 2005 IEEE, Engineering in Medicine and Biology 27th Annual Conference, Sep. 1-4, 2005, pp. 3567-3570.
P. T. Gibbs et al., "Active Motion Artifact Cancellation for Wearable Health Monitoring Sensors Using Collocated MEMS Accelerometers," Proceedings of SPIE Smart Structures and Materials: Sensors and Smart Structures Technologies for Civil, Mechanical, and Aerospace Systems, May 17, 2005, pp. 811-819.
P.S. Pandian et al., "Smart Vest: Wearable Multi-Parameter Remote Physiological Monitoring System," Medical Engineering & Physics 30, 2008. pp. 466-477.
R. Fensli et al., "A Wireless ECG System for Continuous Event Recording and Communication to a Clinical Alarm Station," Conf Proc IEEE Eng Med Biol Soc, 2004, pp. 1-4.
R. P. Dresher et al., "A New Reflectance Pulse Oximeter Housing to Reduce Contact Pressure Effects," IEEE, 2006, pp. 49-50.
R. P. Dresher et al., "Reflectance Forehead Pulse Oximetry: Effects on Contact Pressure During Walking," Proceedings of the 28th IEEE EMBS Annual International Conference, Aug. 30-Sep. 3, 2006, pp. 3529-3532.

Masimo Ex. 1041
IPR Petition - US D962,936

(56) **References Cited**

OTHER PUBLICATIONS

R. Paradiso, "Wearable Health Care System for Vital Signs Monitoring," In Proceedings of IEEE International Conference on Information Technology Applications in Biomedicine, May 2003, pp. 283-286.
Russell Dresher, "Wearable Forehead Pulse Oximetry: Minimization of Motion and Pressure Artifacts," May 3, 2006, 93 pages.
S. Pentland, "Healthwear: Medical Technology Becomes Wearable," IEEE Computer Society, vol. 37, Issue 5, May 2004, pp. 34-41.
S. Rhee et al., "Artifact-Resistant, Power Efficient Design of Finger-Ring Plethysmographic Sensors, Part I: Design and Analysis," 22st Annual International Conference IEEE Engineering in Medicine and Biology Society, Jul. 23-28, 2000, pp. 2792-2795.
S. Rhee et al., "Design of a Artifact-Free Wearable Plethysmographic Sensor," 21st Annual International Conferemce IEEE Engineering in Medicine and Biology Society, Oct. 13-16, 1999, p. 786.
S. Rhee et al., "The Ring Sensor: a New Ambulatory Wearable Sensor for Twenty-Four Hour Patient Monitoring," Proceedings of the 20th Annual International Conference of the IEEE Engineering in Medicine and Biology Society, Oct. 29-Nov. 1, 1998, 4 pages.
S. Warren et al., "Designing Smart Health Care Technology into the Home of the Future," Workshops on Future Medical Devices: Home Care Technologies for the 21st Century, Apr. 1999, 19 pages.
Schmitt, et al., Joseph M.; Measurement of Blood Hematocrit by Dual-Wavelength near-IR Photoplethysmography; vol. 1641; 1992.
Schmitt, Joseph M.; Simple Photon Diffusion Anaylsis of the Effects of Multiple Scattering on Pulse Oximetry; Mar. 14, 1991; revised Aug. 30, 1991.
Schnapp, et al., L.M.; Pulse Oximetry. Uses and Abuses.; Chest 1990; 98; 1244-1250 DOI 10.1378/Chest.98.5.1244.
Small et al., "Data Handling Issues for Near-Infrared Glucose Measurements", http://www.ieee.org/organizations/pubs/newsletters/leos/apr98/datahandling.htm, accessed Nov. 27, 2007.
Smith, "The Pursuit of Noninvasive Glucose: 'Hunting the Deceitful Turkey'", 2006.
Sokwoo Rhee et al., "Artifact-Resistant Power-Efficient Design of Finger-Ring Plethysmographic Sensors," IEEE Transactions on Biomedical Engineering, Jul. 2001, pp. 795-805, vol. 48, No. 7.
Sonnia Maria López Silva et al., "Near-infrared transmittance pulse oximetry with laser diodes," Journal of Biomedical Optics vol. 8 No. 3, Jul. 2003, pp. 525-533.
Stephen A. Mascaro et al., "Measurement of Finger Posture and Three-Axis Fingertip Touch Force Using Fingernail Sensors," IEEE International Conference on Robotics and Automation, 2002, pp. 1-11.
Stephen A. Mascaro et al., "Photoplethysmograph Fingernail Sensors for Measuring Finger Forces Without Haptic Obstruction," IEEE Transactions on Robotics and Automation, vol. 17, No. 5, Oct. 2001, pp. 698-708.
T. Kiyokura et al., "Wearable Laser Blood Flowmeter for Ubiquitous Healthcare Service," 2007 IEEE/LEOS International Conference on Optical MEMS and Nanophotonics, Hualien, 2007, pp. 4-5.
T. Martin et al., "Issues in Wearable Computing for Medical Montioring Applications: A Case Study of a Wearable ECG Monitoring Device," In Proceedings of International Symposium of Wearable Computers (ISWC'00), Feb. 2000, pp. 43-49.
T. Torfs et al., "Body-Heat Powered Autonomous Pulse Oximeter," IEEE Sensors 2006, EXCO, Oct. 22-25, 2006, pp. 427-430.
Takumi Morita et al., "Integrated Blood Flowmeter Using Micromachining Technology," Dec. 2004, pp. 77-80.
Anliker et al., "AMON: A Wearable Multiparameter Medical Monitoring and Alert System," IEEE Transactions on Information Technology in Biomedicine, Jan. 2005, pp. 1-11.
W. Johnston et al., "Extracting Heart Rate Variability from a Wearable Reflectance Pulse Oximeter," IEEE, 2005, pp. 1-2.
W. S. Johnston et al., "Extracting Breathing Rate Information from a Wearable Reflectance Pulse Oximeter Sensor," Proceedings of the 26th Annual International Conference of the IEEE EMBS, Sep. 1-5, 2004, pp. 5388-5391.
W. S. Johnston et al., "Investigation of Signal Processing Algorithms for an Embedded Microcontroller-Based Wearable Pulse Oximeter," Proceedings of the 28th IEEE EMBS Annual International Conference, Aug. 30-Sep. 3, 2006, pp. 5888-5891.
Y-S. Yan et al., An Efficient Motion-Resistant Method for Wearable Pulse Oximeter, IEEE Transactions on Information Technology in Biomedicine, vol. 12, No. 3, May 2008, pp. 399-405.
Yuan-Hsiang Lin et al., "A wireless PDA-based physiological monitoring system for patient transport," IEEE Transactions on Information Technology in Biomedicine, vol. 8, No. 4, pp. 439-447, Dec. 2004.
Jan. 9, 2020 Complaint for (1) Patent Infringement (2) Trade Secret Misappropriation and (3) Ownership of Patents and Demand for Jury Trial, *Masimo Corporation and Cercacor Laboratories, Inc.* v. *Apple Inc.*, Case No. 8:20-cv-00048, 64 pages.
Mar. 25, 2020 First Amended Complaint for (1) Patent Infringement (2) Trade Secret Misappropriation (3) Correction of Inventorship and (4) Ownership of Patents and Demand for Jury Trial, and including Exhibits 13-24 (Exhibits 1-12 and 25-31 comprise copies of publicly available U.S. patents and U.S. patent application publications, and are not included herein for ease of transmission), *Masimo Corporation and Cercacor Laboratories, Inc.* v. *Apple Inc.*, Case No. 8:20-cv-00048, pp. 1-94, 983-1043 (total of 156 pages).
Jul. 24, 2020 Second Amended Complaint for (1) Patent Infringement (2) Trade Secret Misappropriation (3) Correction of Inventorship and (4) Ownership of Patents and Demand for Jury Trial, and including Exhibit 1, *Masimo Corporation and Cercacor Laboratories, Inc.* v. *Apple Inc.*, Case No. 8:20-cv-00048, 182 pages.
Jul. 27, 2020 Plaintiffs' Infringement Contentions, and including Exhibit 1 and Appendices A-P, *Masimo Corporation and Cercacor Laboratories, Inc.* v. *Apple Inc.*, Case No. 8:20-cv-00048, 305 pages.
Sep. 8, 2020 Apple's Preliminary Invalidity Contentions, and including Exhibits A-G, *Masimo Corporation and Cercacor Laboratories, Inc.* v. *Apple Inc.*, Case No. 8:20-cv-00048, 3960 pages. [uploaded in 15 parts].
Petition for Inter Partes Review of U.S. Pat. No. 10,258,265, *Apple Inc.* v. *Masimo Corporation*, Inter Partes Review No. IPR2020-01520, dated Aug. 31, 2020, in 114 pages.
Declaration of Thomas W. Kenny, Ph.D., in support of Petition for Inter Partes Review of U.S. Pat. No. 10,258,265, Ex. 1003, *Apple Inc.* v. *Masimo Corporation*, Inter Partes Review No. IPR2020-01520, dated Aug. 31, 2020, in 138 pages.
Petition for Inter Partes Review of U.S. Pat. No. 10,588,553, *Apple Inc.* v. *Masimo Corporation*, Inter Partes Review No. IPR2020-01536, dated Aug. 31, 2020, in 114 pages.
Declaration of Thomas W. Kenny, Ph.D., in support of Petition for Inter Partes Review of U.S. Pat. No. 10,588,553, Ex. 1003, *Apple Inc.* v. *Masimo Corporation*, Inter Partes Review No. IPR2020-01536, dated Aug. 31, 2020, in 173 pages.
Petition for Inter Partes Review of U.S. Pat. No. 10,588,553, *Apple Inc.* v. *Masimo Corporation*, Inter Partes Review No. IPR2020-01537, dated Aug. 31, 2020, in 114 pages.
Declaration of Thomas W. Kenny, Ph.D., in support of Petition for Inter Partes Review of U.S. Pat. No. 10,588,553, Ex. 1003, *Apple Inc.* v. *Masimo Corporation*, Inter Partes Review No. IPR2020-01537, dated Aug. 31, 2020, in 181 pages.
Petition for Inter Partes Review of U.S. Pat. No. 10,292,628, *Apple Inc.* v. *Masimo Corporation*, Inter Partes Review No. IPR2020-01521, dated Sep. 2, 2020, in 107 pages.
Declaration of Thomas W. Kenny, Ph.D., in support of Petition for Inter Partes Review of U.S. Pat. No. 10,292,628, Ex. 1003, *Apple Inc.* v. *Masimo Corporation*, Inter Partes Review No. IPR2020-01521, dated Sep. 2, 2020, in 133 pages.
Petition for Inter Partes Review of U.S. Pat. No. 10,588,554, *Apple Inc.* v. *Masimo Corporation*, Inter Partes Review No. IPR2020-01538, dated Sep. 2, 2020, in 108 pages.
Declaration of Thomas W. Kenny, Ph.D., in support of Petition for Inter Partes Review of U.S. Pat. No. 10,588,554, Ex. 1003, *Apple Inc.* v. *Masimo Corporation*, Inter Partes Review No. IPR2020-01538, dated Sep. 2, 2020, in 151 pages.

Masimo Ex. 1041
IPR Petition - US D962,936

(56) **References Cited**

OTHER PUBLICATIONS

Petition for Inter Partes Review of U.S. Pat. No. 10,588,554, *Apple Inc.* v. *Masimo Corporation*, Inter Partes Review No. IPR2020-01539, dated Sep. 2, 2020, in 111 pages.
Declaration of Thomas W. Kenny, Ph.D., in support of Petition for Inter Partes Review of U.S. Pat. No. 10,588,554, Ex. 1003, *Apple Inc.* v. *Masimo Corporation*, Inter Partes Review No. IPR2020-01539, dated Sep. 2, 2020, in 170 pages.
Petition for Inter Partes Review of U.S. Pat. No. 10,624,564, *Apple Inc.* v. *Masimo Corporation*, Inter Partes Review No. IPR2020-01713, dated Sep. 30, 2020, in 117 pages.
Declaration of Thomas W. Kenny, Ph.D., in support of Petition for Inter Partes Review of U.S. Pat. No. 10,624,564, Ex. 1003, *Apple Inc.* v. *Masimo Corporation*, Inter Partes Review No. IPR2020-01713, dated Sep. 30, 2020, in 159 pages.
Petition for Inter Partes Review of U.S. Pat. No. 10,631,765, *Apple Inc.* v. *Masimo Corporation*, Inter Partes Review No. IPR2020-01714, dated Sep. 30, 2020, in 113 pages.
Declaration of Thomas W. Kenny, Ph.D., in support of Petition for Inter Partes Review of U.S. Pat. No. 10,631,765, Ex. 1003, *Apple Inc.* v. *Masimo Corporation*, Inter Partes Review No. IPR2020-01714, dated Sep. 30, 2020, in 122 pages.
Petition for Inter Partes Review of U.S. Pat. No. 10,631,765, *Apple Inc.* v. *Masimo Corporation*, Inter Partes Review No. IPR2020-01715, dated Sep. 30, 2020, in 114 pages.
Declaration of Thomas W. Kenny, Ph.D., in support of Petition for Inter Partes Review of U.S. Pat. No. 10,631,765, Ex. 1003, *Apple Inc.* v. *Masimo Corporation*, Inter Partes Review No. IPR2020-01715, dated Sep. 30, 2020, in 117 pages.
Petition for Inter Partes Review of U.S. Pat. No. 10,702,194, *Apple Inc.* v. *Masimo Corporation*, Inter Partes Review No. IPR2020-01716, dated Sep. 30, 2020, in 100 pages.
Declaration of Thomas W. Kenny, Ph.D., in support of Petition for Inter Partes Review of U.S. Pat. No. 10,702,194, Ex. 1003, *Apple Inc.* v. *Masimo Corporation*, Inter Partes Review No. IPR2020-01716, dated Sep. 30, 2020, in 109 pages.
Petition for Inter Partes Review of U.S. Pat. No. 10,702,195, *Apple Inc.* v. *Masimo Corporation*, Inter Partes Review No. IPR2020-01733, dated Sep. 30, 2020, in 105 pages.
Declaration of Thomas W. Kenny, Ph.D., in support of Petition for Inter Partes Review of U.S. Pat. No. 10,702,195, Ex. 1003, *Apple Inc.* v. *Masimo Corporation*, Inter Partes Review No. IPR2020-01733, dated Sep. 30, 2020, in 108 pages.
Petition for Inter Partes Review of U.S. Pat. No. 10,709,366, *Apple Inc.* v. *Masimo Corporation*, Inter Partes Review No. IPR2020-01737, dated Sep. 30, 2020, in 104 pages.
Declaration of Thomas W. Kenny, Ph.D., in support of Petition for Inter Partes Review of U.S. Pat. No. 10,709,366, Ex. 1003, *Apple Inc.* v. *Masimo Corporation*, Inter Partes Review No. IPR2020-01737, dated Sep. 30, 2020, in 110 pages.
D. Thompson et al., "Pulse Oximeter Improvement with an ADC-DAC Feedback Loop and a Radical Reflectance Sensor," Proceedings of the 28th IEEE EMBS Annual International Conference, 2006, pp. 815-818.
Service Manual: NPB-40 Handheld Pulse Oximeter, Nellcor Puritan Bennett, Inc., Copyright 2001, 55 pages.
J. Bronzino et al., Tthe Biomedical Engineering Handbook, Second Edition, CRC Press LLC, 2000, 21 pages.
J. Bronzino et al., Medical Devices and Systems, The Biomedical Engineering Handbook, Third Edition, Taylor & Francis Group, LLC, Apr. 2006, 20 pages.
J. Webster et al., Nanoparticles—Radiotherapy Accessories, Encyclopedia of Medical Devices and Instrumentation, Second Edition, vol. 5, Wiley-Interscience, 2006, 42 pages.
S. LeGare et al., "A Device to Assess the Severity of Peripheral Edema," IEEE 33rd Annual Northeast Bioengineering Conference, 2007, pp. 257-258.
M. Corcoran et al., "A Humidifier for Olfaction Studies During Functional Magnetic Resonance Imaging," Proceedings of the IEEE 31st Annual Northeast Bioengineering Conference, 2005, pp. 1-2.
Y. Mendelson et al., "A Multiwavelength VIS-NIR Spectrometer for Pulsatile Measurement of Hemoglobin Derivatives in Whole Blood," 18th Annual International Conference of the IEEE Engineering in Medicine and Biology Society, 1996, pp. 134-135.
H. DiSpirito et al., "A Neural Stimulation System Model to Enhance Neural Integrated Circuit Design," 29th Southern Biomedical Engineering Conference, 2013, pp. 9-10.
D. Sen et al., "A New Vision for Preventing Pressure Ulcers: Wearable Wireless Devices Could Help Solve a Common-and Serious-Problem," IEEE Pulse, vol. 9, No. 6, Nov. 2018, pp. 28-31.
N. Selvaraj et al., "A Novel Approach Using Time—Frequency Analysis of Pulse-Oximeter Data to Detect Progressive Hypovolemia in Spontaneously Breathing Healthy Subjects," IEEE Transactions on Biomedical Engineering, vol. 58, No. 8, Aug. 2011, pp. 2272-2279.
S. Salehizadeh et al., "A Novel Time-Varying Spectral Filtering Algorithm for Reconstruction of Motion Artifact Corrupted Heart Rate Signals During Intense Physical Activities Using a Wearable Photoplethysmogram Sensor," Sensors 2016, vol. 16, No. 1, Dec. 2015, pp. 1-20.
A. Gendler et al., "A PAB-Based Multi-Prefetcher Mechanism," International Journal of Parallel Programming, vol. 34, No. 2, Apr. 2006, pp. 171-188.
J. Harvey et al., "A Portable Sensor for Skin Bioimpedance Measurements," International Journal of Sensors and Sensor Networks, vol. 7, No. 1, Aug. 2019, pp. 1-8.
D. Traviglia et al., "A Portable Setup for Comparing Transmittance and Reflectance Pulse Oximeters for Field Testing Applications," Proceedings of the IEEE 30th Annual Northeast Bioengineering Conference, 2004, pp. 212-213.
S. Xie et al., "A Predictive Model for Force-Sensing Resistor Nonlinearity for Pressure Measurement in a Wearable Wireless Sensor Patch," IEEE 61st International Midwest Symposium on Circuits and Systems, 2018, pp. 476-479.
P. Muller et al., "A Preliminary In-Vitro Evaluation and Comparative Study of Various Tissue pH Sensors," Proceedings of the 18th IEEE Annual Northeast Bioengineering Conference, 1992, pp. 158-159.
D. Dao et al., "A Robust Motion Artifact Detection Algorithm for Accurate Detection of Heart Rates From Photoplethysmographic Signals Using Time-Frequency Spectral Features," IEEE Journal of Biomedical and Health Informatics, vol. 21, No. 5, Sep. 2017, pp. 1242-1253.
G. Comtois et al., "A Wearable Wireless Reflectance Pulse Oximeter for Remote Triage Applications," Proceedings of the IEEE 32nd Annual Northeast Bioengineering Conference, 2006, pp. 53-54.
S. Djamasbi et al., "Affect Feedback during Crisis and Its Role in Improving IS Utilization," Proceedings of the 7th International Conference on Information Systems for Crisis Response and Management (ISCRAM), 2010, pp. 1-4.
B. Odegard et al., "An Analysis of Racewalking Styles Using a 2-Dimensional Mathematical Knee Model," Proceedings of the IEEE 23rd Northeast Bioengineering Conference, 1997, pp. 73-74.
S. Patrick et al., "An Electromyogram Simulator for Myoelectric Prosthesis Testing," Proceedings of the IEEE 36th Annual Northeast Bioengineering Conference (NEBEC), 2010, pp. 1-2.
Y. Mendelson et al., "An In Vitro Tissue Model for Evaluating the Effect of Carboxyhemoglobin Concentration on Pulse Oximetry," IEEE Transactions on Biomedical Engineering, vol. 36, No. 6, Jun. 1989, pp. 625-627.
C. Tamanaha et al., "An Inorganic Membrane Filter to Support Biomembrane-Mimetic Structures," Proceedings of 17th International Conference of the Engineering in Medicine and Biology Society, Sep. 1995, pp. 1559-1560.
A. Lader et al., "An Investigative Study of Membrane-Based Biosensors," Proceedings of the IEEE 17th Annual Northeast Bioengineering Conference, 1991, pp. 253-254.
N. Reljin et al., "Automatic Detection of Dehydration using Support Vector Machines," 14th Symposium on Neural Networks and Applications (NEUREL), Nov. 2018, pp. 1-6.
Y. Mendelson et al., Chapter 9: Biomedical Sensors, Introduction to Biomedical Engineering, Second Edition, Apr. 2005, pp. 505-548.

Masimo Ex. 1041
IPR Petition - US D962,936

(56) **References Cited**

OTHER PUBLICATIONS

R. Peura et al, "Biotechnology for Biomedical Engineers," IEEE Engineering in Medicine and Biology, vol. 14, No. 2, Apr. 1995, pp. 199-200.
Y. Mendelson et al., "Blood Glucose Measurement by Multiple Attenuated Total Reflection and Infrared Absorption Spectroscopy," IEEE Transactions on Biomedical Engineering, vol. 37, No. 5, May 1990, pp. 458-465.
Y. Mendelson et al., "Carbon dioxide laser based multiple ATR technique for measuring glucose in aqueous solutions," Applied Optics, vol. 27, No. 24, Dec. 1988, pp. 5077-5081.
J. Harvey et al., "Correlation of bioimpedance changes after compressive loading of murine tissues in vivo," Physiological Measurement, vol. 40, No. 10, Oct. 2019, pp. 1-13.
B. Yocum et al., "Design of a Reflectance Pulse Oximeter Sensor and its Evaluation in Swine," Proceedings of the 15th Annual Northeast Bioengineering Conference, IEEE, 1989, pp. 239-240.
E. Tuite et al., "Design of Individual Balance Control Device Utilized during the Sit-to-Stand Task," ISB 2011 Brussels, 2011, pp. 1-2.
C. E. Darling et al., "Detecting Blood Loss With a Wearable Photoplethysmography Device," Annals of Emergency Medicine, vol. 68, No. 45, Oct. 2016, p. S116.
N. Reljin et al., "Detection of Blood Loss in Trauma Patients using Time-Frequency Analysis of Photoplethysmographic Signal," IEEE-EMBS International Conference on Biomedical and Health Informatics (BHI), 2016, pp. 118-121.
Y. Xu et al., "Drowsiness Control Center by Photoplethysmogram," 38th Annual Northeast Bioengineering Conference (NECBEC), IEEE, 2012, pp. 430-431.
M. Last et al., Chapter 14: Early Warning from Car Warranty Data using a Fuzzy Logic Technique, Scalable Fuzzy Algorithms for Data Management and Analysis: Methods and Design, 2009, pp. 347-364.
W. Johnston et al., "Effects of Motion Artifacts on Helmet-Mounted Pulse Oximeter Sensors," Proceedings of the IEEE 30th Annual Northeast Bioengineering Conference, 2014, pp. 214-215.
A. Nagre et al., "Effects of Motion Artifacts on Pulse Oximeter Readings from Different Facial Regions," Proceedings of the IEEE 31st Annual Northeast Bioengineering Conference, 2005, pp. 1-3.
R. Kasbekar et al., "Evaluation of key design parameters for mitigating motion artefact in the mobile reflectance PPG signal to improve estimation of arterial oxygenation," Physiological Measurement, vol. 39, No. 7, Jul. 2018, pp. 1-12.
Y. Mendelson et al., "Evaluation of the Datascope ACCUSAT Pulse Oximeter in Healthy Adults," Journal of Clinical Monitoring, vol. 4, No. 1, Jan. 1988, pp. 59-63.
C. Tamanaha et al., "Feasibility Study of an Inorganic Membrane Filter as a Support for Biomembrane-Mimetic Structures," Proceedings of the IEEE 21st Annual Northeast Bioengineering Conference, 1995, pp. 99-101.
J. McNeill et al., "Flexible Sensor for Measurement of Skin Pressure and Temperature in a Clinical Setting," 2016 IEEE Sensors, Nov. 2016, pp. 1-3.
P. Bhandare et al., "Glucose determination in simulated blood serum solutions by Fourier transforms infrared spectroscopy: investigation of spectral interferences," Vibrational Spectroscopy, vol. 6, No. 3, Mar. 1994, pp. 363-378.
P. Bhandare et al. "Glucose Determination in Simulated Plasma Solutions Using Infrared Spectrophotometry," 14th Annual International Conference of the IEEE Engineering in Medicine and Biology Society, Nov. 1992, pp. 163-164.
C. Tamanaha et al., "Humidity and Cation Dependency of Purple Membrane Based Biosensors," Proceedings of the 18th IEEE Annual Northeast Bioengineering Conference, Mar. 1992, pp. 107-108.
K. M. Warren et al., "Improving Pulse Rate Measurements during Random Motion Using a Wearable Multichannel Reflectance Photoplethysmograph," Sensors (Basel), vol. 16, No. 3, Mar. 2016, p. 1-18.
P. Bhandare et al., "IR Spectrophotometric Measurement of Glucose in Phosphate Buffered Saline Solutions: Effects of Temperature and pH," Proceedings of the 18th IEEE Annual Northeast Bioengineering Conference, 1992, pp. 103-104.
Y. Mendelson et al., "Multi-channel pulse oximetry for wearable physiological monitoring," IEEE International Conference on Body Sensor Networks, 2013, pp. 1-6.
P. Bhandare et al., "Multivariate Determination of Glucose in Whole Blood Using Partial Least-Squares and Artificial Neural Networks Based on Mid-Infrared Spectroscopy," Society for Applied Spectroscopy, vol. 47, No. 8, 1993, pp. 1214-1221.
E. Morillo et al., "Multiwavelength Transmission Spectrophotometry in the Pulsatile Measurement of Hemoglobin Derivatives in Whole Blood," Proceedings of the IEEE 23rd Northeast Bioengineering Conference, 1997, pp. 5-6.
P. Bhandare et al., "Neural Network Based Spectral Analysis of Multicomponent Mixtures for Glucose Determination," Proceedings of the IEEE, 17th Annual Northeast Bioengineering Conference, 1991, pp. 249-250.
Y. Mendelson et al., "Noninvasive Transcutaneous Monitoring of Arterial Blood Gases," IEEE Transactions on Biomedical Engineering, vol. BME-31, No. 12, Dec. 1984, pp. 792-800.
J. Harvey et al., "OxiMA: A Frequency-Domain Approach to Address Motion Artifacts in Photoplethysmograms for Improved Estimation of Arterial Oxygen Saturation and Pulse Rate," IEEE Transactions on Biomedical Engineering, vol. 66, No. 2, Feb. 2019, pp. 311-318.
J. Chong et al., "Photoplethysmograph Signal Reconstruction Based on a Novel Hybrid Motion Artifact Detection—Reduction Approach. Part I: Motion and Noise Artifact Detection," Annals of Biomedical Engineering, vol. 42, No. 11, Nov. 2014, pp. 2238-2250.
S. M. A. Salehizadeh et al., "Photoplethysmograph Signal Reconstruction based on a Novel Motion Artifact Detection-Reduction Approach. Part II: Motion and Noise Artifact Removal," Annals of Biomedical Engineering, vol. 42, May 2014, pp. 2251-2263.
C. G. Scully et al., "Physiological Parameter Monitoring from Optical Recordings With a Mobile Phone," IEEE Transactions on Biomedical Engineering, vol. 59, No. 2, Feb. 2012, pp. 303-306.
D. Sen et al., "Pressure Ulcer Prevention System: Validation in a Clinical Setting," IEEE Life Sciences Conference (LSC), 2018, pp. 105-108.
Y. Mendelson et al., Pulse Oximetry: Theory and Applications for Noninvasive Monitoring, Clinical Chemistry, vol. 38, No. 9, 1992, pp. 1601-1607.
Y. Mendelson, Pulse Oximetry, PowerPoint, UMass Center for Clinical and Translational Science Research Retreat, 2017, 22 pages.
E. Stohr et al., "Quantitative FT-IR Spectrometry of Blood Constituents," 14th Annual International Conference of the IEEE Engineering in Medicine and Biology Society, 1992, pp. 173-174.
E. Stohr et al., "Quantitative FTIR Spectrophotometry of Cholesterol and Other Blood Constituents and their Interference with the In-Vitro Measurement of Blood Glucose," Proceedings of the 18th IEEE Annual Northeast Bioengineering Conference, 1992, pp. 105-106.
N. Selvaraj et al., "Statistical Approach for the Detection of Motion/Noise Artifacts in Photoplethysmogram," 33rd Annual International Conference of the IEEE EMBS, Sep. 2011, pp. 4972-4975.
C. Tamanaha et al., "Surface Modification of γ-Al_2O_3 Filters by Chemisorption of Alkyltrichlorosilane Molecules," 18th Annual International Conference of the IEEE Engineering in Medicine and Biology Society, 1996, pp. 2069-2070.
D. Sen et al., "Time-Domain-Based Measurement Technique for Pressure Measurement in a Wearable Wireless Sensor Patch," IEEE International Symposium on Circuits and Systems (ISCAS), 2018, pp. 1-5.
N. Reljin et al., "Using support vector machines on photoplethysmographic signals to discriminate between hypovolemia and euvolemia," PLoS One, vol. 13, No. 3, Mar. 2018, pp. 1-14.
Y. Mendelson et al., "Variations in Optical Absorption Spectra of Adult and Fetal Hemoglobins and Its Effect on Pulse Oximetry," IEEE Transactions on Biomedical Engineering, vol. 36, No. 8, Aug. 1989, pp. 844-848.

Masimo Ex. 1041
IPR Petition - US D962,936

(56) **References Cited**

OTHER PUBLICATIONS

K. Chon et al., "Wearable Wireless Sensor for Multi-Scale Physiological Monitoring," Worcester Polytechnic Institute, Oct. 2014, 82 pages.
K. Chon et al., "Wearable Wireless Sensor for Multi-Scale Physiological Monitoring," Worcester Polytechnic Institute, Oct. 2015, 142 pages.
J. McNeill et al., "Wearable Wireless Sensor Patch for Continuous Monitoring of Skin Temperature, Pressure, and Relative Humidity," IEEE International Symposium on Circuits and Systems (ISCAS), 2017, pp. 1-4.
D. Sen et al., "Wireless Sensor Patch Suitable for Continuous Monitoring of Contact Pressure in a Clinical Setting," 16th IEEE International New Circuits and Systems Conference (NEWCAS), 2018, pp. 91-95.
K. Hickle et al., "Wireless Pressure Ulcer Sensor," Annals of Plastic Surgery, vol. 82, Supplement 3, Apr. 2019, pp. S215-S221.
Y. Mendelson, et al., "Design and Evaluation of a New Reflectance Pulse Oximeter Sensor", Worcester Polytechnic Institute, Biomedical Engineering Program, Worcester, MA 01609, Association for the Advancement of Medical Instrumentation, vol. 22, No. 4, 1988, pp. 167-173.
Definition of "gap", excerpt from Merriam-Webster's Collegiate Dictionary (11th ed.), 2005, 3 pages.
"Acrylic: Strong, stiff, clear plastic available in variety of brilliant colors", Copyright 2020. available at http://www.curbellplastics.com/Research-Solutions/Materials/Acrylic, 5 pages.
QuickSpecs, Version 3, Nov. 20, 2003, HP iPAQ Pocket PC h4150 Series, 8 pages.
"Universal asynchronous receiver-transmitter", Wikipedia, available at https://en.wikipedia.org/wiki/Universal_asynchronous_receiver-transmitter, accessed Aug. 27, 2020, 10 pages.
Y. Mendelson, et al., "Skin Reflectance Pulse Oximetry: In Vivo Measurements from the Forearm and Calf", Journal of Clinical Monitoring, vol. 7, No. 1, Jan. 1991, pp. 7-12.
Design of Pulse Oximeters, J.G. Webster, Institution of Physics Publishing, IOP Publishing Ltd, 1997, 262 pages (uploaded in three parts).
McPherson, "How to Do Everything with Windows Mobile", McGraw Hill, 2006, 431 pages (uploaded in three parts).
B. Landon et al., "Master Visually Windows Mobile 2003", Wiley Publishing, Inc., 2004, 335 pages (uploaded in two parts).
J. Yao, et al., "Stimulating Student Learning with a Novel 'In-House' Pulse Oximeter Design", Proceedings of the 2005 American Society for Engineering Education Annual Conference & Exposition, 2005, 14 pages.
National Instruments LabVIEW User Manual, National Instruments Corporation, Nov. 2001 Edition, Part No. 320999D-01, 293 pages.
Definition of "processor", excerpt from Merriam-Webster's Collegiate Dictionary (10th ed.), 1999, 6 pages.
Y. Mendelson et al., "Noninvasive Pulse Oximetry Utilizing Skin Reflectance Photoplethysmography", IEEE Transactions on Biomedical Engineering, vol. 35, No. 10, Oct. 1988, pp. 798-805.
Oct. 20, 2020 Letter from B. K. Andrea to J. Re et al., Re: *Masimo Corp, et al.* v. *Apple, Inc.*, C.A. 8:20-cv-00048 (C.D. Cal.), 19 pages.
3 pages of images, identified by bates Nos. "APL-MAS_00057600", "APL-MAS_00057601", and "APL-MAS_00057602". Undated.
2 pages of images, identified by bates Nos. "APL-MAS_00057598" and "APL-MAS_00057599". Undated.
Y. Mendelson et al., A Wearable Reflectance Pulse Oximeter for Remote Physiological Monitoring, PowerPoint, The Bioengineering Institute, Worcester Polytechnic Institute, 18 pages. Undated.
P. C. Branche et al., "A Wearable Wireless Reflectance Pulse Oximeter with Automatic and Remote On-Demand Activation," Annual Fall Meeting of the BMES, 2004, p. 1.
A Wireless Wearable Reflectance Pulse Oximeter Printout, The Bioengineering Institute, Worcester Polytechnic Institute, 1 page. Undated.
Y. Mendelson et al., A Wireless Wearable Reflectance-Based Forehead Pulse Oximeter, PowerPoint, The Bioengineering Institute, Worcester Polytechnic Institute, 8 pages. Undated.
R. J. Duckworth et al., Field Testing of a Wireless Wearable Reflectance Pulse Oximeter Printout, Department of Electrical and Computer Engineering and Department of Biomedical Engineering, Worcester Polytechnic Institute, 1 page. Undated.
V. Floroff, "PDA Interface for the WPI Wireless Physiological Monitor," Directed research, Department of Biomedical Engineering, Worcester Polytechnic Institute, Mar. 2006, 42 pages.
Wireless Wearable Reflectance Pulse Oximeter, PowerPoint, The Bioengineering Institute, Worcester Polytechnic Institute, TATRC, 10 pages. Undated.
V. Floroff, "Remote Pulse Oximetry: The wireless side of the TATRC project." Thesis, Worcester Polytechnic Institute, Feb. 2005, pp. 1-20.
Y. Mendelson et al., "The Feasibility of Measuring SpO_2 from the Head Using a Reflectance Pulse Oximeter: Effect of Motion Artifacts," Proceeding of the 3rd European Medical & Biological Engineering Conference, 2005, 5 pages.
Y. Mendelson, "Wearable, Wireless, Noninvasive Physiological Sensing," The Bioengineering Institute, Worcester Polytechnic Institute, 2005, 2 pages.
Y. Mendelson et al., "Wireless Reflectance Pulse Oximetery for Remote Triage Application," Worcester Polytechnic Institute, 1 page. Undated.
Nov. 12, 2020 Third Amended Complaint for (1) Patent Infringement (2) Trade Secret Misappropriation (3) Correction of Inventorship and (4) Ownership of Patents and Demand for Jury Trial, and including Exhibit 1,*Masimo Corporation and Cercacor Laboratories, Inc.* v. *Apple Inc.*, Case No. 8:20-cv-00048, 196 pages. [uploaded in 2 parts].
K. Self, Application Note 78—Using Power Management with High-Speed Microcontrollers, Maxim Integrated Products, Inc., Mar. 29, 2001, 25 pages.
Service Manual: Nellcor Symphony N-3000 Pulse Oximeter, Nellcor Puritan Bennett, Inc., Copyright 1996, 110 pages.
Home Use Guide: Nellcor Symphony N-3000 Pulse Oximeter, Nellcor Puritan Bennett, Inc., Copyright 1996, 50 pages.
Operator's Manual: Nellcor N-200 Pulse Oximeter, Nellcor Incorporated, Copyright 2003, 96 pages.
S. Kastle et al., "A New Family of Sensors for Pulse Oximetry," Hewlett-Packard Journal, Article 7, Feb. 1997, pp. 1-17.
M. Nogawa et al., "A Novel Hybrid Reflectance Pulse Oximeter Sensor with Improved Linearity and General Applicability to Various Portions of the Body," Proceedings of the 20th Annual International Conference of the IEEE Engineering in Medicine and Biology Society, vol. 20, No. 4, 1998, pp. 1858-1861.
J. Hodby, "A ratio-measuring detection system for use in pulsed spectroscopic measurements," Journal of Physics E: Scientific Instruments, vol. 3, 1970, pp. 229-233.
K. Li et al., "A Wireless Reflectance Pulse Oximeter with Digital Baseline Control for Unfiltered Photoplethysmograms," IEEE Transactions on Biomedical Circuits and Systems, Nov. 2011, pp. 1-11.
D. Thompson et al., "A Small, High-Fidelity Reflectance Pulse Oximeter," American Society for Engineering Education, 2007, 14 pages.
K. Li et al., "A High-Performance Wireless Reflectance Pulse Oximeter for Photo-Plethysmogram Acquisition and Analysis in the Classroom," American Society for Engineering Education, 2010, 12 pages.
M. J. Hayes, "Artefact Reduction in Photoplethysmography," Doctoral thesis, Department of Electronic and Electrical Engineering, Loughborough University, Nov. 1998, 195 pages. (uploaded in 2 parts).
A. C. M. Dassel et al., "Effect of location of the sensor on reflectance pulse oximetry," British Journal of Obstetrics and Gynaecology, vol. 104, Aug. 1997, pp. 910-916.
RF Cafe, Electronic Warfare and Radar Systems Engineering Handbook, Duty Cycle, available at https://www.rfcafe.com/references/electrical/ew-radar-handbook/duty-cycle.htm, retrieved Jul. 11, 2020, 3 pages.

Masimo Ex. 1041
IPR Petition - US D962,936

(56) **References Cited**

OTHER PUBLICATIONS

Y. Shimada et al., "Evaluation of a new reflectance pulse oximeter for clinical applications," Medical & Biological Engineering & Computing, vol. 29, No. 5, Sep. 1991, pp. 557-561.
S. Takatani et al., "Experimental and Clinical Evaluation of a Noninvasive Reflectance Pulse Oximeter Sensor," Journal of Clinical Monitoring, vol. 8, No. 4, Oct. 1992, pp. 257-266.
K. Ono et al., "Fiber optic reflectance spectrophotometry system for in vivo tissue diagnosis," Applied Optics, vol. 30, No. 1, Jan. 1991, pp. 98-105.
M. Barr, "Introduction to Pulse Width Modulation (PWM)," Barr Group, Embedded Systems Programming, Sep. 2001, pp. 1-3.
P. P. Vaidyanathan, "Multirate Digital Filters, Filter Banks, Polyphase Networks, and Applications: A Tutorial," Proceedings of the IEEE, vol. 78, No. 1, Jan. 1990, pp. 56-93.
S. Oshima et al., "Optical Measurement of Blood Hematocrit on Medical Tubing with Dual Wavelength and Detector Model," 31st Annual International Conference of the IEEE EMBS, Sep. 2009, pp. 5891-5896.
Optoelectronics, Data Book 1990, Siemens Components, Inc., 770 pages. (uploaded in 7 parts).
OxiplexTS Near Infrared, Non-Invasive, Tissue Spectrometer Brochure, ISS, Inc., Copyright 2001, 6 pages.
J. A. Pologe, "Pulse Oximetry: Technical Aspects of Machine Design," International Anesthesiology Clinics, vol. 25, No. 3, 1987, pp. 137-153.
B. F. Koegh et al., "Recent findings in the use of reflectance oximetry: a critical review," Current Opinion in Anaesthesiology, vol. 18, 2005, pp. 649-654.
K. Faisst et al., "Reflectance pulse oximetry in neonates," European Journal of Obstetrics & Gynecology and Reproductive Biology, vol. 61, No. 2, Aug. 1995, pp. 117-122.
V. Konig et al., "Reflexions-Pulsoximetrie—Untersuchungen mit eigenem Mess-System," Biomedical Engineering, Biomedizinische Technik, vol. 37. No. s2, 1992, pp. 39-40.
Petition for Inter Partes Review of U.S. Pat. No. 10,299,708, *Apple Inc.* v. *Masimo Corporation*, Inter Partes Review No. IPR2021-00193, dated Nov. 20, 2020, in 107 pages.
Declaration of Thomas W. Kenny, Ph.D., in support of Petition for Inter Partes Review of U.S. Pat. No. 10,299,708, Ex. 1003, *Apple Inc.* v. *Masimo Corporation*, Inter Partes Review No. IPR2021-00193, dated Nov. 20, 2020, in 136 pages.
Petition for Inter Partes Review of U.S. Pat. No. 10,376,190, *Apple Inc.* v. *Masimo Corporation*, Inter Partes Review No. IPR2021-00195, dated Nov. 20, 2020, in 109 pages.
Declaration of Thomas W. Kenny, Ph.D., in support of Petition for Inter Partes Review of U.S. Pat. No. 10,376,190, Ex. 1003, *Apple Inc.* v. *Masimo Corporation*, Inter Partes Review No. IPR2021-00195, dated Nov. 20, 2020, in 139 pages.
Petition for Inter Partes Review of U.S. Pat. No. 10,258,266, *Apple Inc.* v. *Masimo Corporation*, Inter Partes Review No. IPR2021-00208, dated Nov. 20, 2020, in 80 pages.
Declaration of Thomas W. Kenny, Ph.D., in support of Petition for Inter Partes Review of U.S. Pat. No. 10,258,266, Ex. 1003, *Apple Inc.* v. *Masimo Corporation*, Inter Partes Review No. IPR2021-00208, dated Nov. 20, 2020, in 96 pages.
Petition for Inter Partes Review of U.S. Pat. No. 10,376,191, *Apple Inc.* v. *Masimo Corporation*, Inter Partes Review No. IPR2021-00209, dated Nov. 20, 2020, in 79 pages.
Declaration of Thomas W. Kenny, Ph.D., in support of Petition for Inter Partes Review of U.S. Pat. No. 10,376,191, Ex. 1003, *Apple Inc.* v. *Masimo Corporation*, Inter Partes Review No. IPR2021-00209, dated Nov. 20, 2020, in 96 pages.
J. Schmitt et al., "An Integrated Circuit-Based Optical Sensor for In Vivo Measurement of Blood Oxygenation," IEEE Transactions on Biomedical Engineering, vol. BME-33, No. 2, Feb. 1986, pp. 98-107.
C. Gutierrez et al, "Non-Invasive Functional Mapping of the Brain Using Cerebral Oximeter," Proceedings of the Second Joint EMBS/BMES Conference, Oct. 2002, pp. 947-948.
R. Gupta et al., "Design and Development of Pulse Oximeter," Proceedings RC IEEE-EMBS & 14th BMESI, 1995, pp. 1.13-1.16.
S. Duun et al., "A Novel Ring Shaped Photodiode for Reflectance Pulse Oximetry in Wireless Applications," IEEE Sensors Conference, 2007, pp. 596-599.

* cited by examiner

Masimo Ex. 1041
IPR Petition - US D962,936

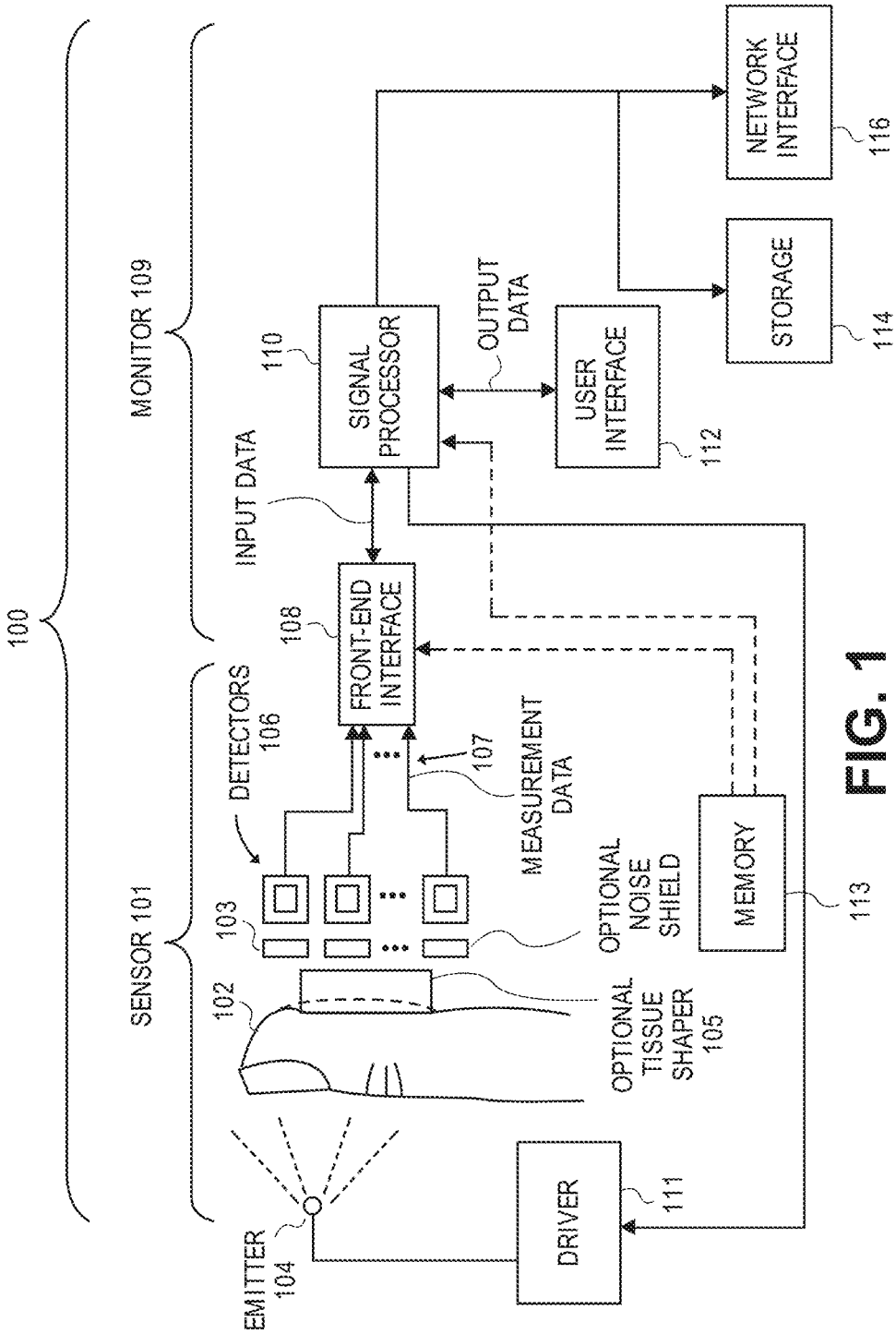

FIG. 1

Masimo Ex. 1041
IPR Petition - US D962,936

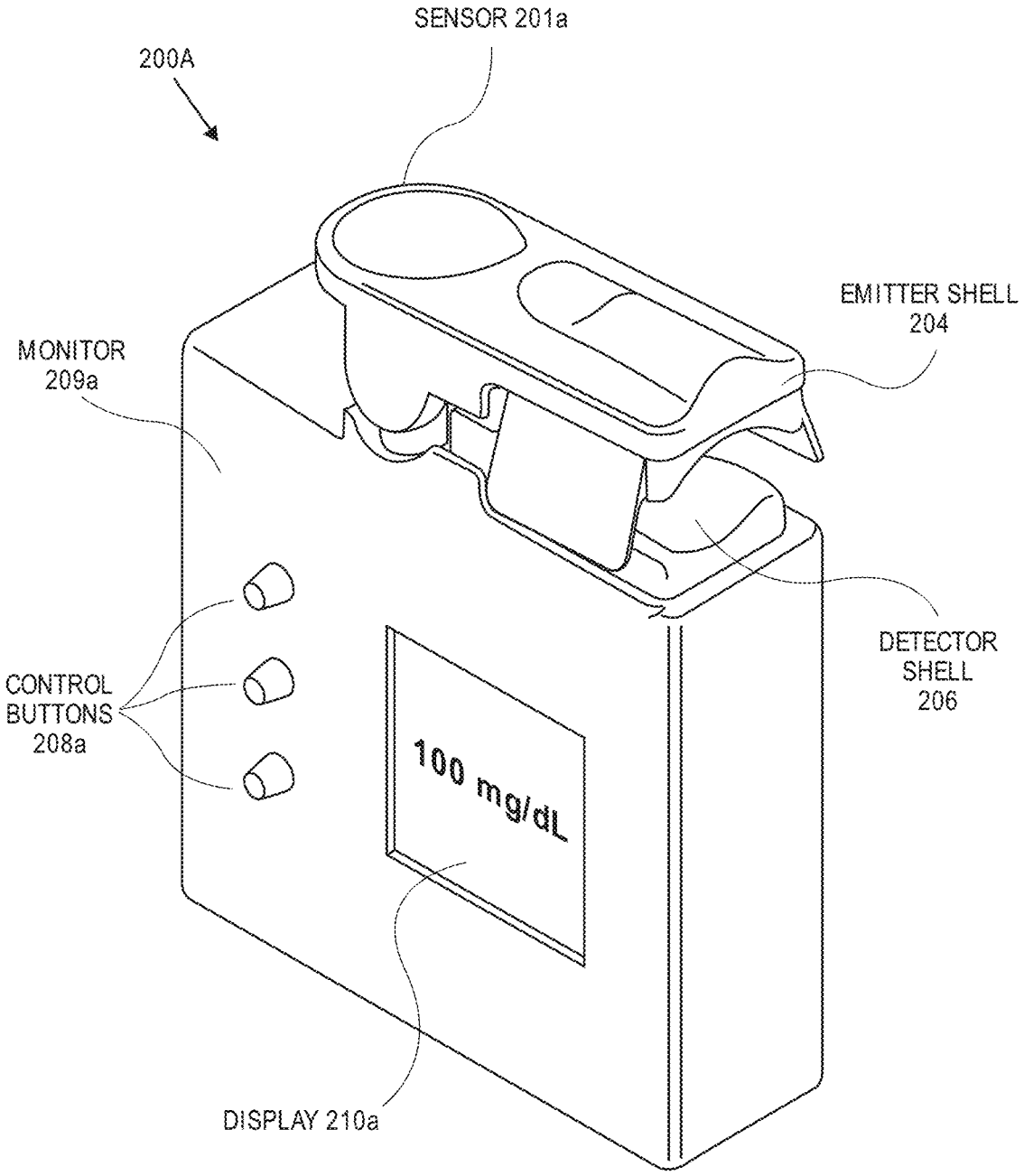
SENSOR 201a
200A
EMITTER SHELL
204
MONITOR
209a
DETECTOR
SHELL
206
CONTROL
BUTTONS
208a
100 mg/dL
DISPLAY 210a

FIG. 2A

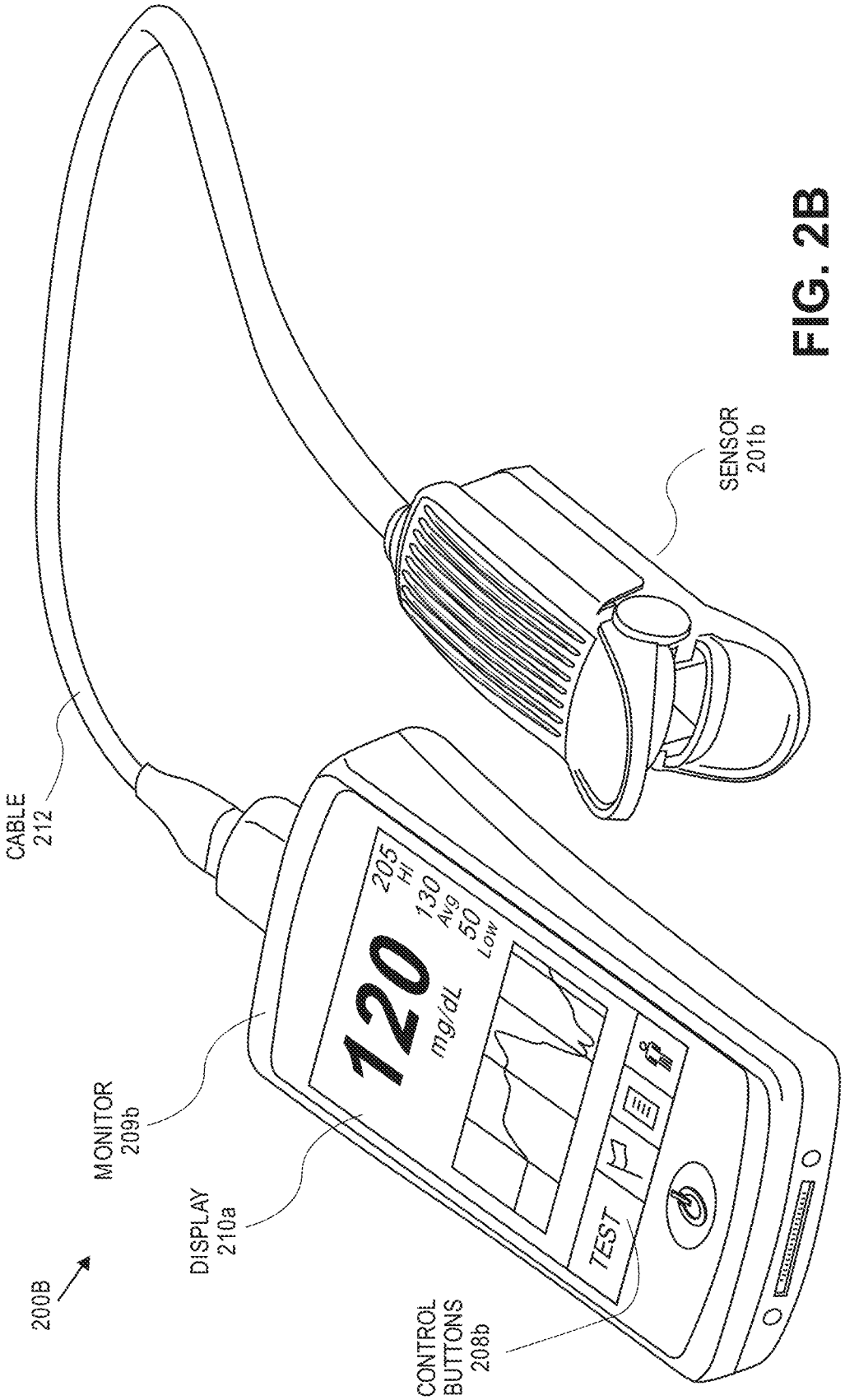

FIG. 2B

Masimo Ex. 1041
IPR Petition - US D962,936

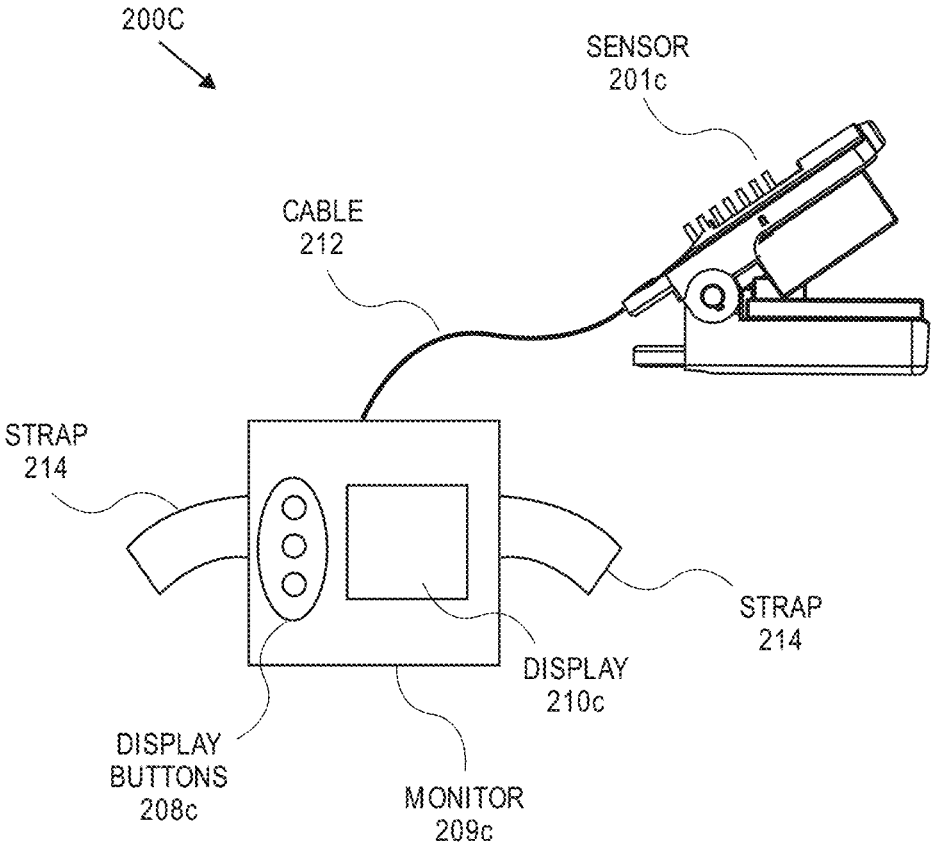
200C
SENSOR
201c
CABLE
212
STRAP
214
STRAP
214
DISPLAY
210c
DISPLAY
BUTTONS
208c
MONITOR
209c

FIG. 2C

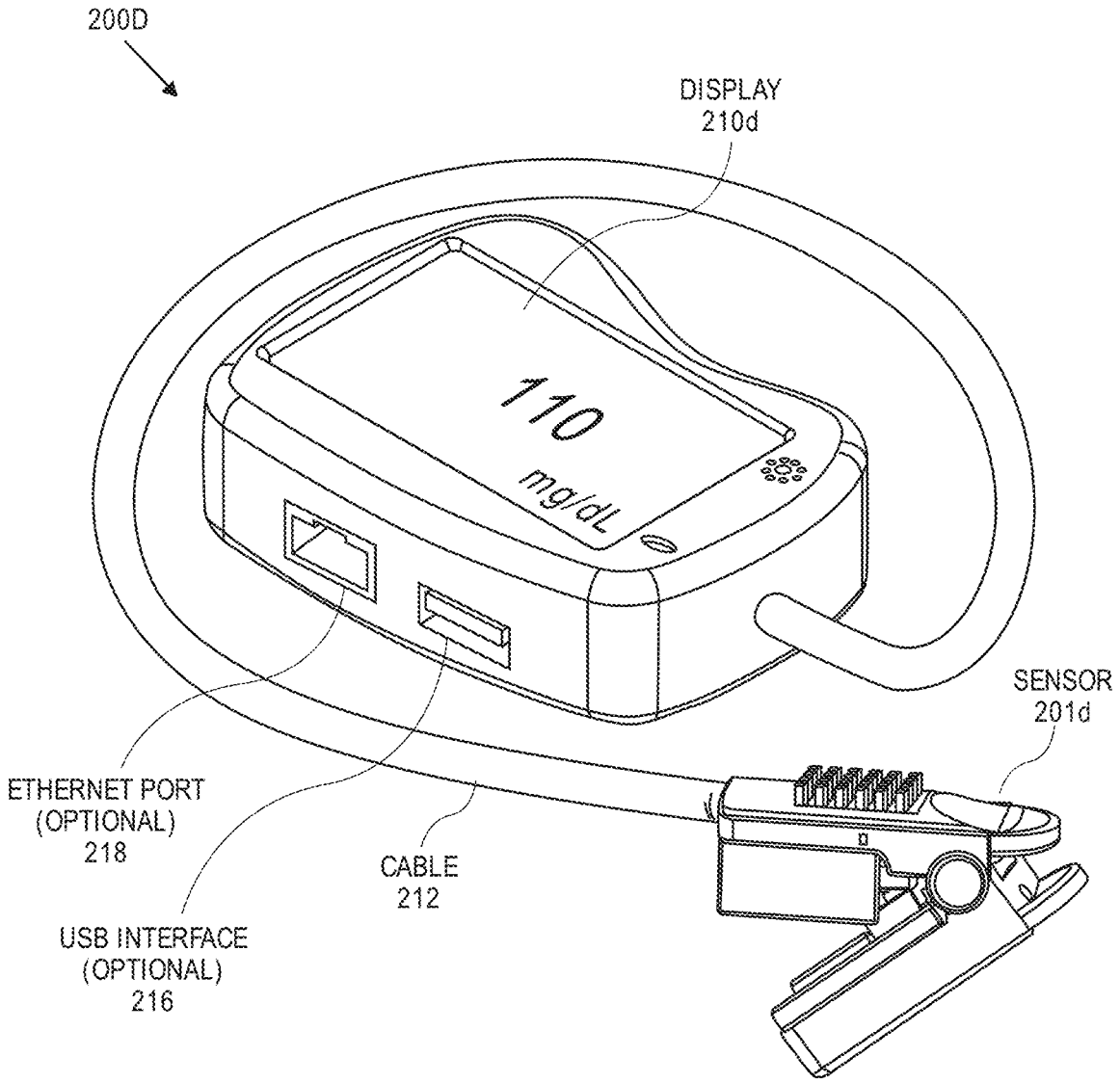

FIG. 2D

Masimo Ex. 1041
IPR Petition - US D962,936

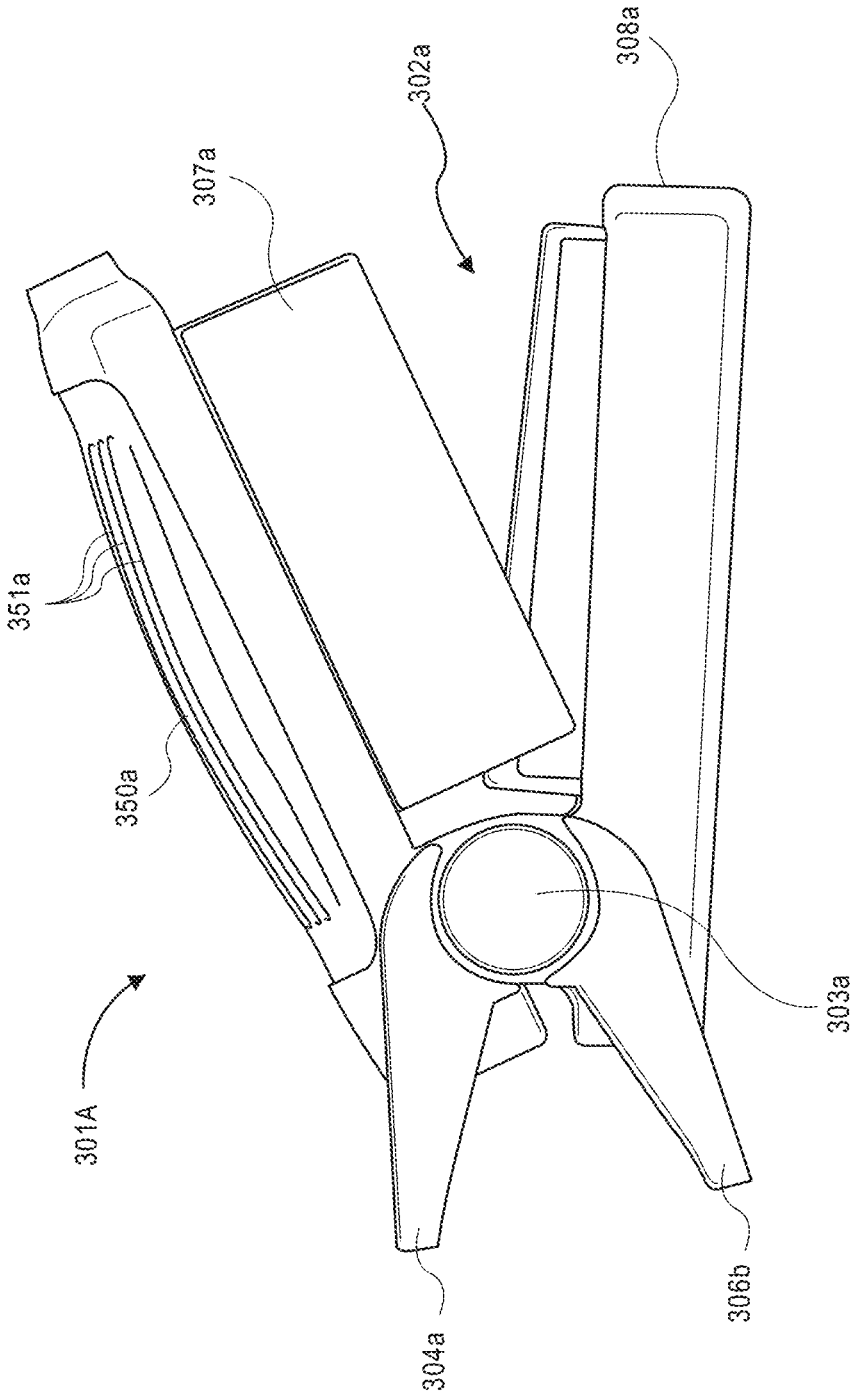

FIG. 3A

Masimo Ex. 1041
IPR Petition - US D962,936

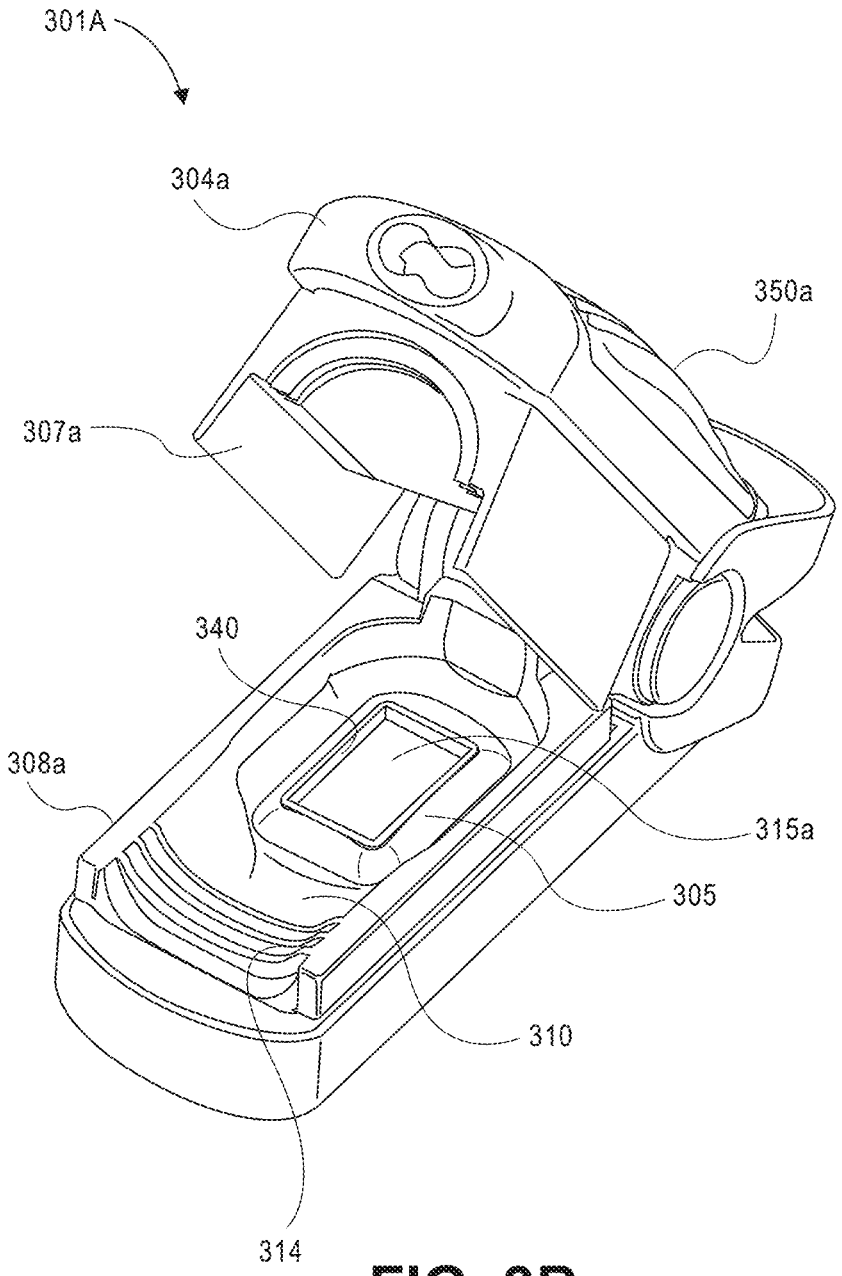

FIG. 3B

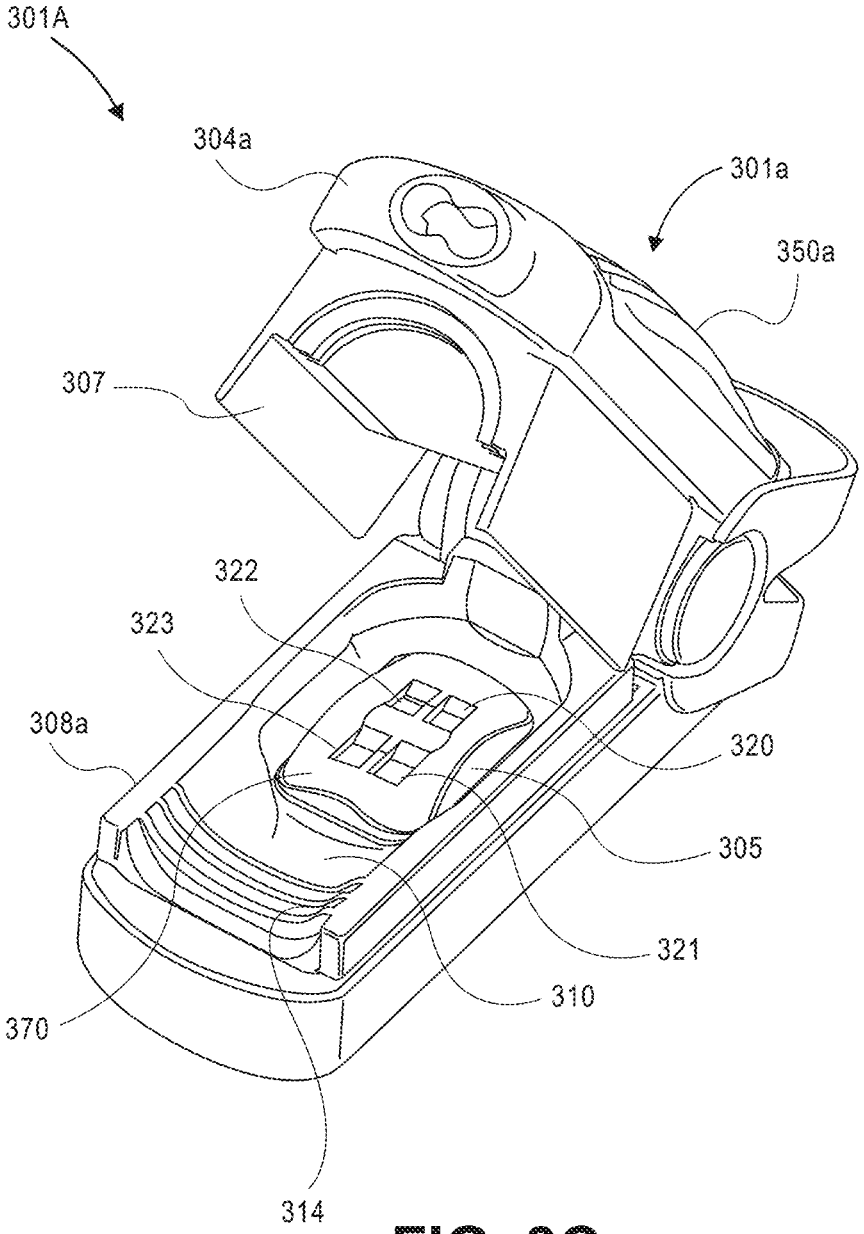

FIG. 3C

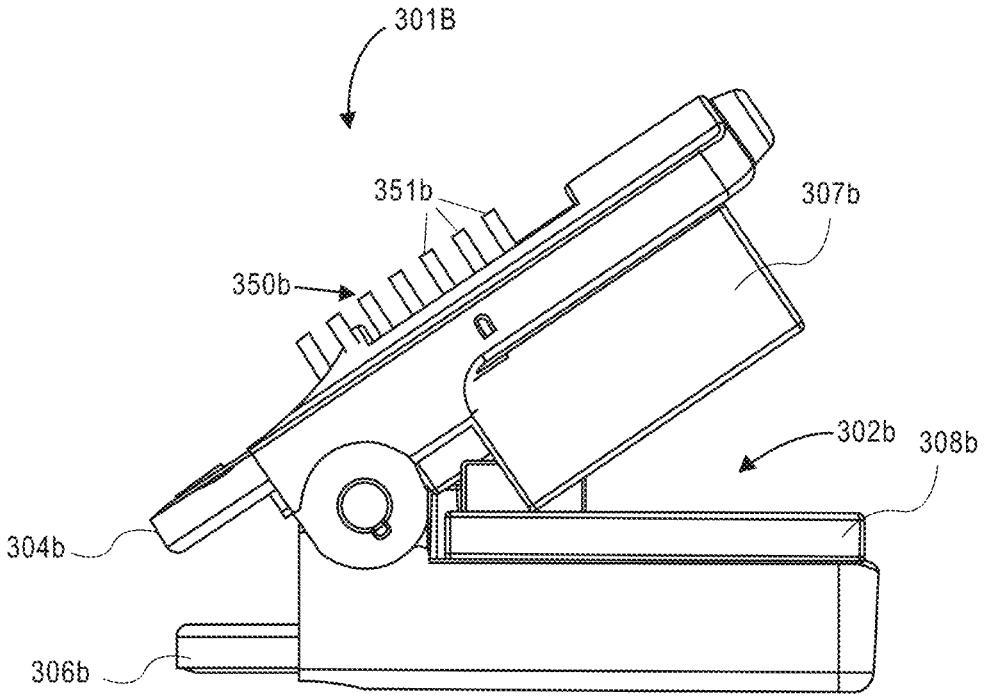

FIG. 3D

Masimo Ex. 1041
IPR Petition - US D962,936

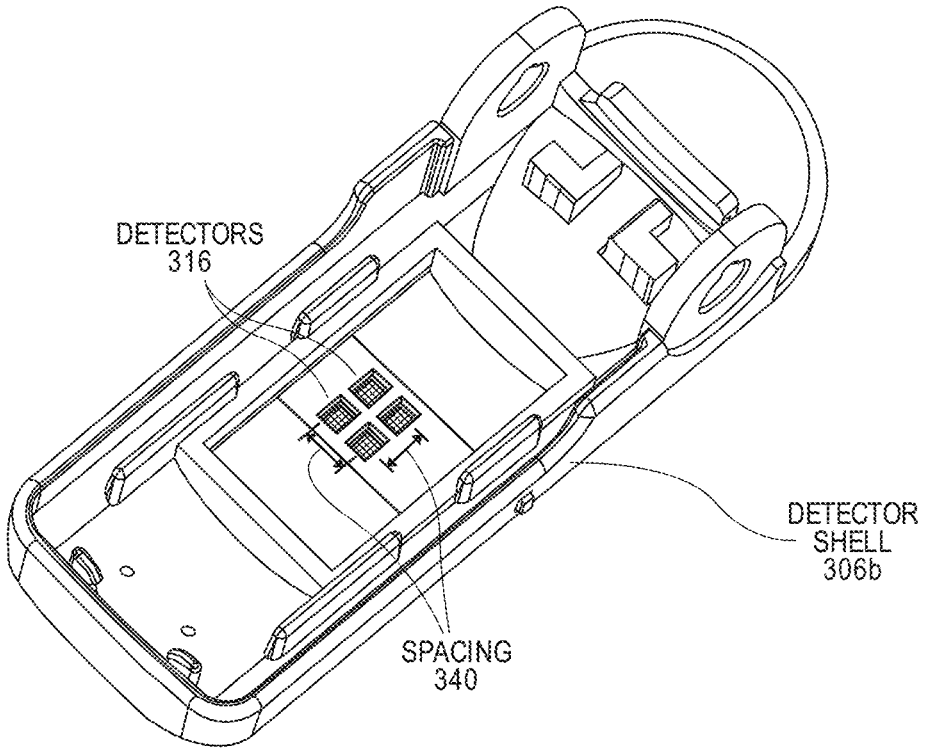

FIG. 3E

Masimo Ex. 1041
IPR Petition - US D962,936

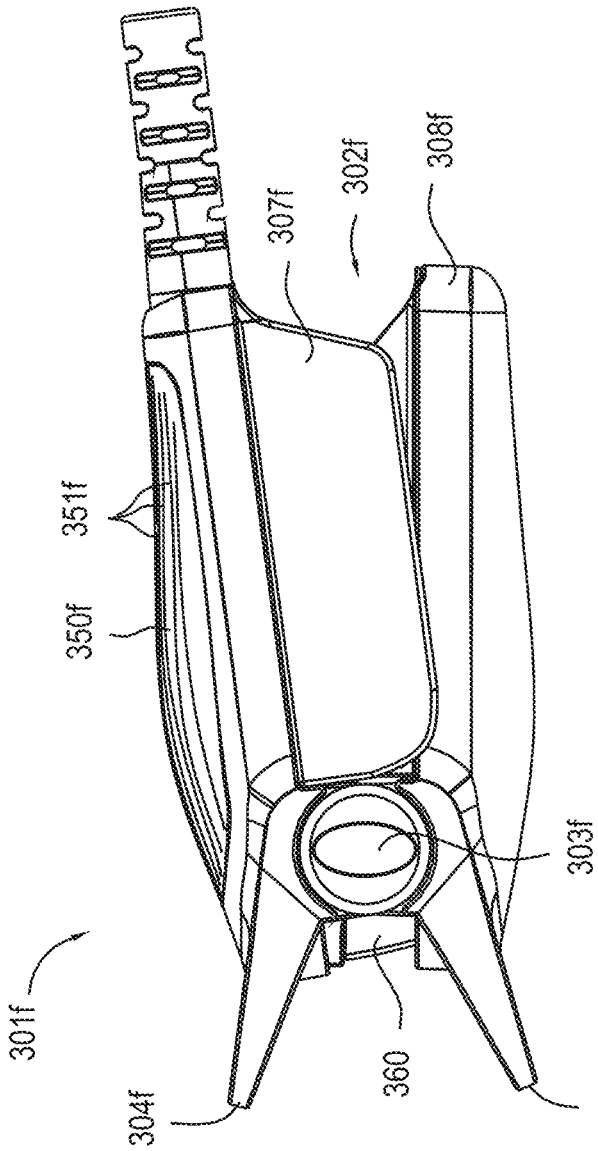

FIG. 3F

Masimo Ex. 1041
IPR Petition - US D962,936

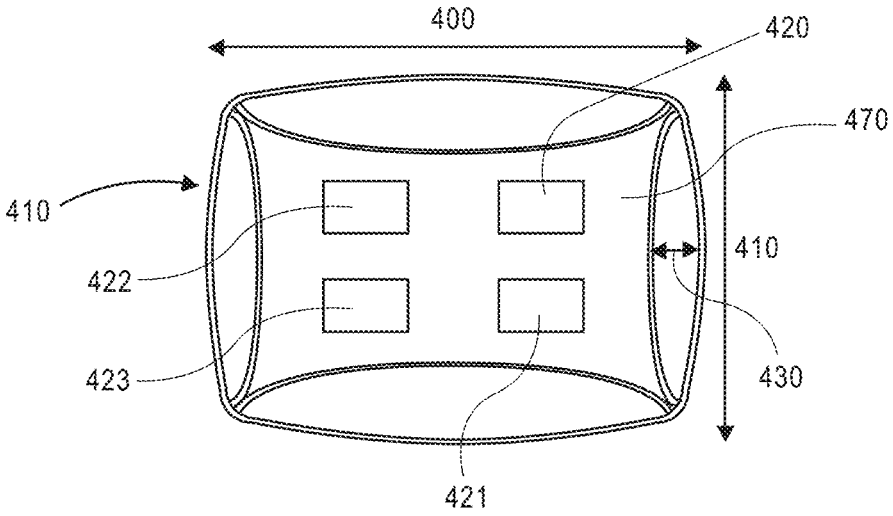

FIG. 4A

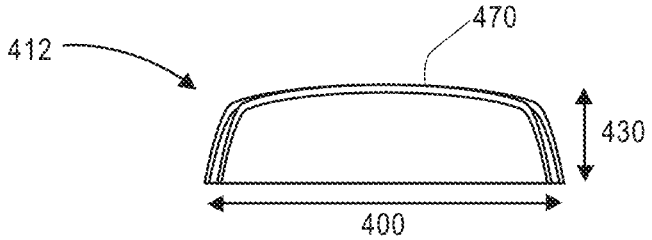

FIG. 4B

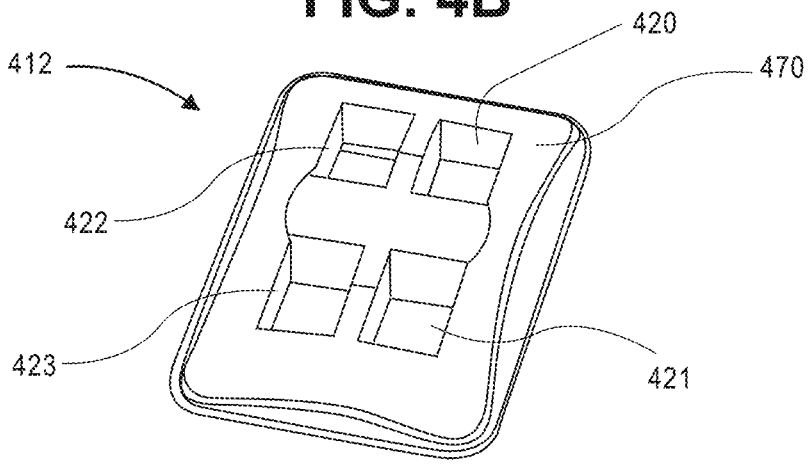

FIG. 4C

Masimo Ex. 1041
IPR Petition - US D962,936

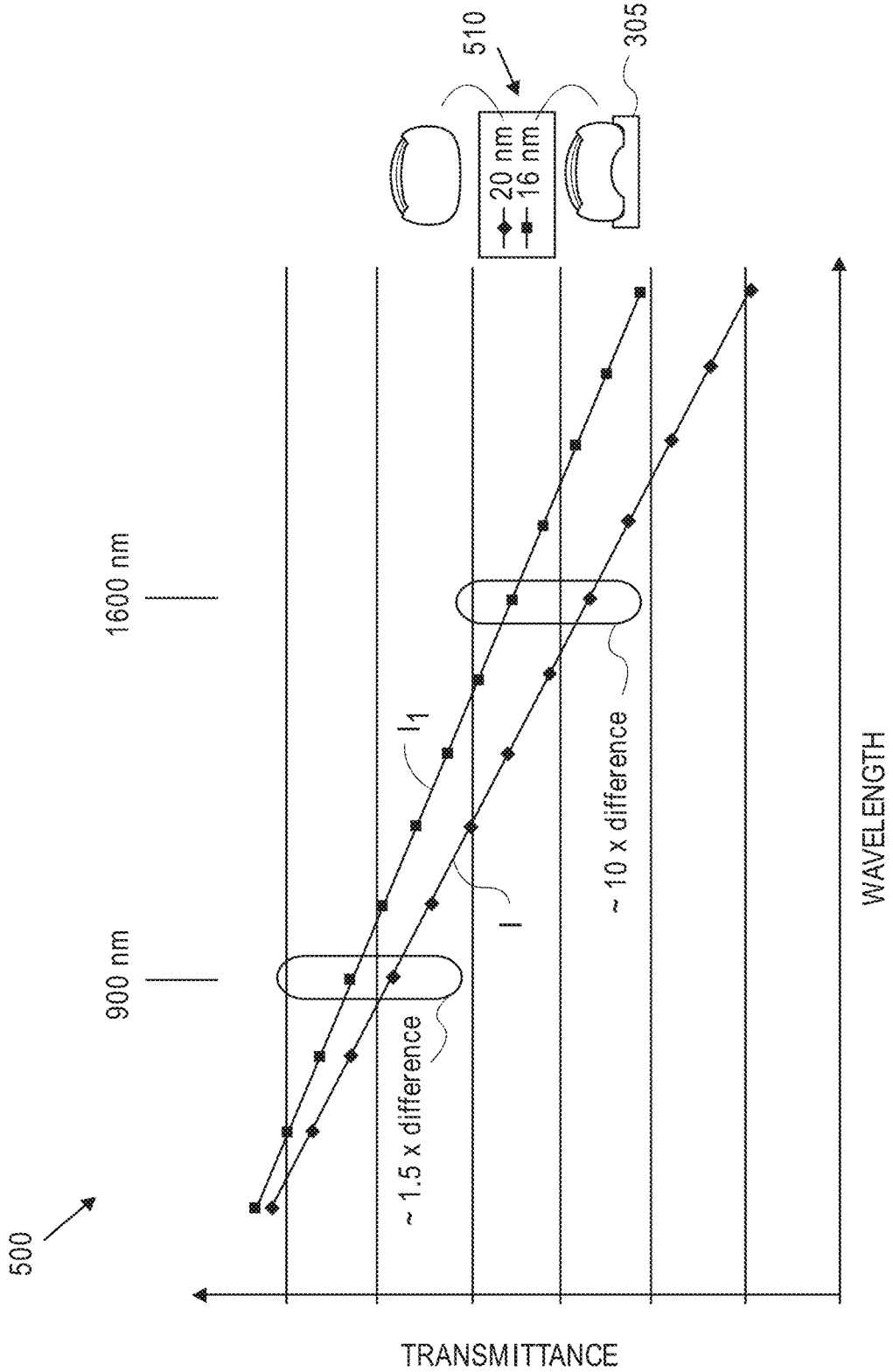

FIG. 5

Masimo Ex. 1041
IPR Petition - US D962,936

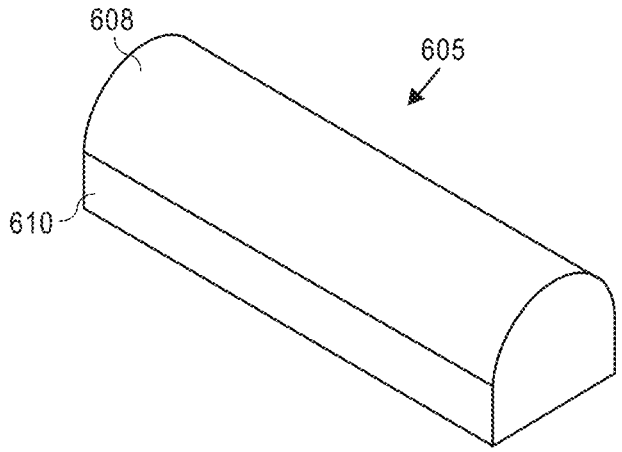

FIG. 6A

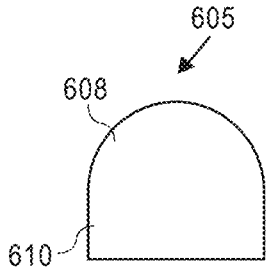

FIG. 6B

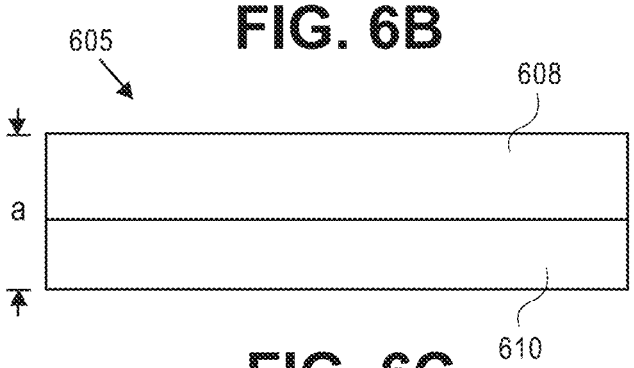

FIG. 6C

FIG. 6D

Masimo Ex. 1041
IPR Petition - US D962,936

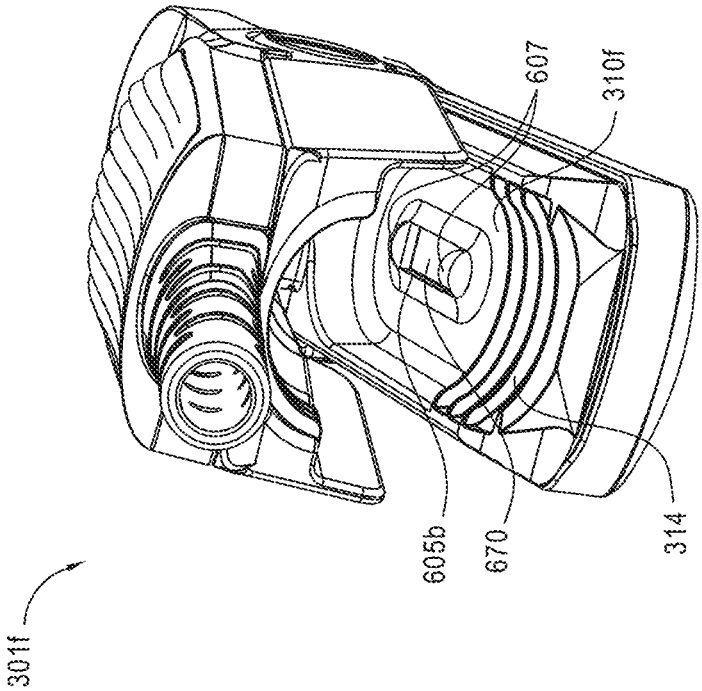

FIG. 6E

Masimo Ex. 1041
IPR Petition - US D962,936

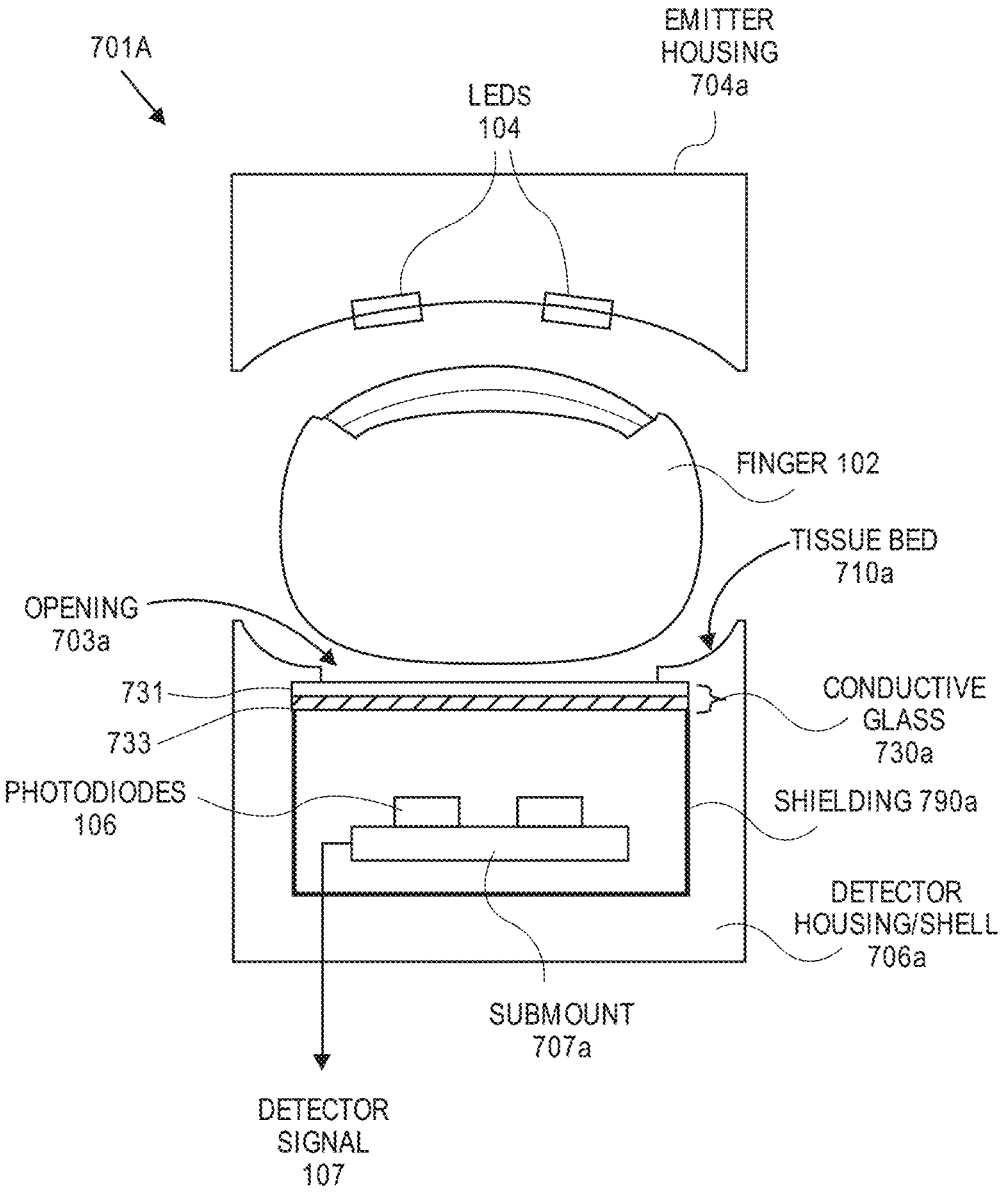

FIG. 7A

Masimo Ex. 1041
IPR Petition - US D962,936

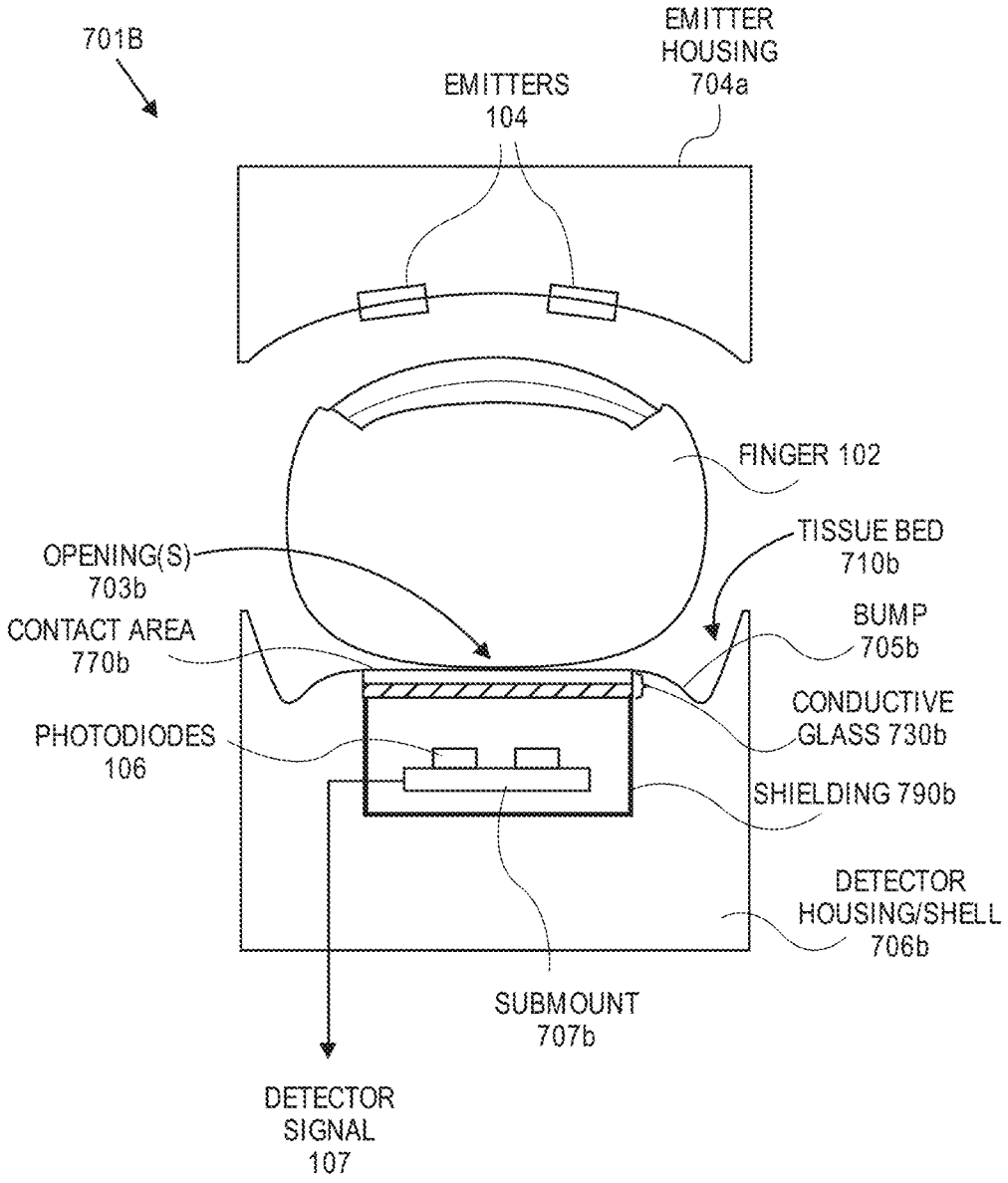

FIG. 7B

Masimo Ex. 1041
IPR Petition - US D962,936

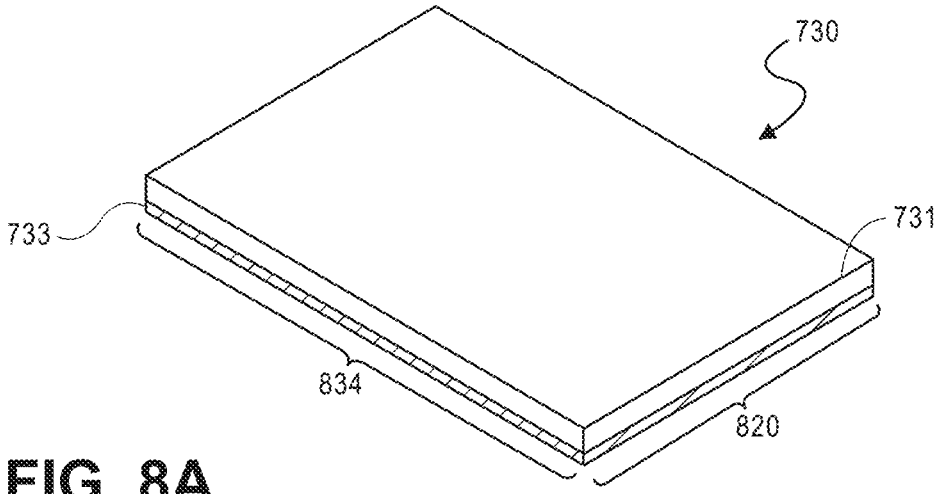

FIG. 8A

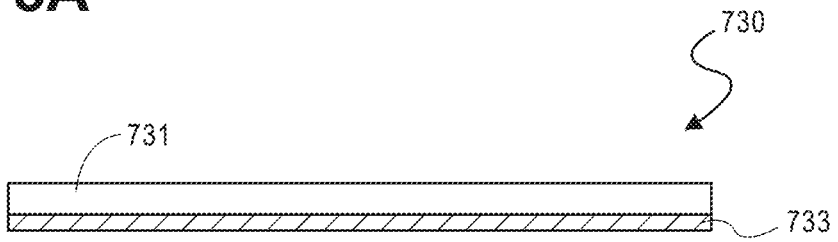

FIG. 8B

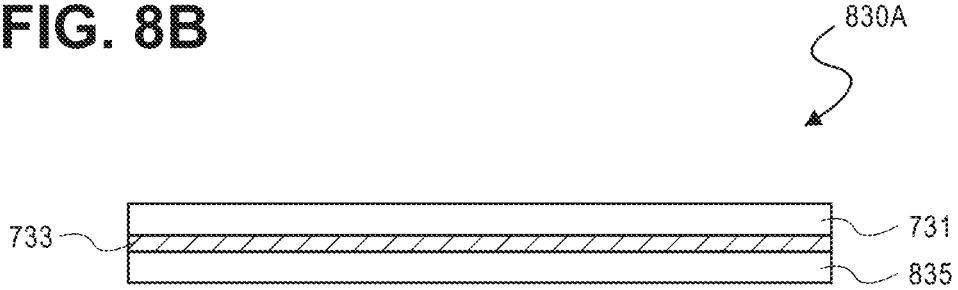

FIG. 8C

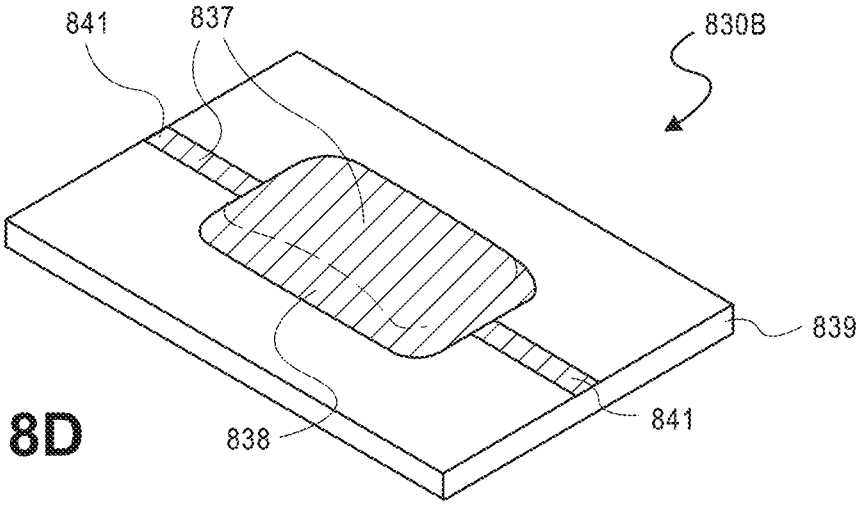

FIG. 8D

Masimo Ex. 1041
IPR Petition - US D962,936

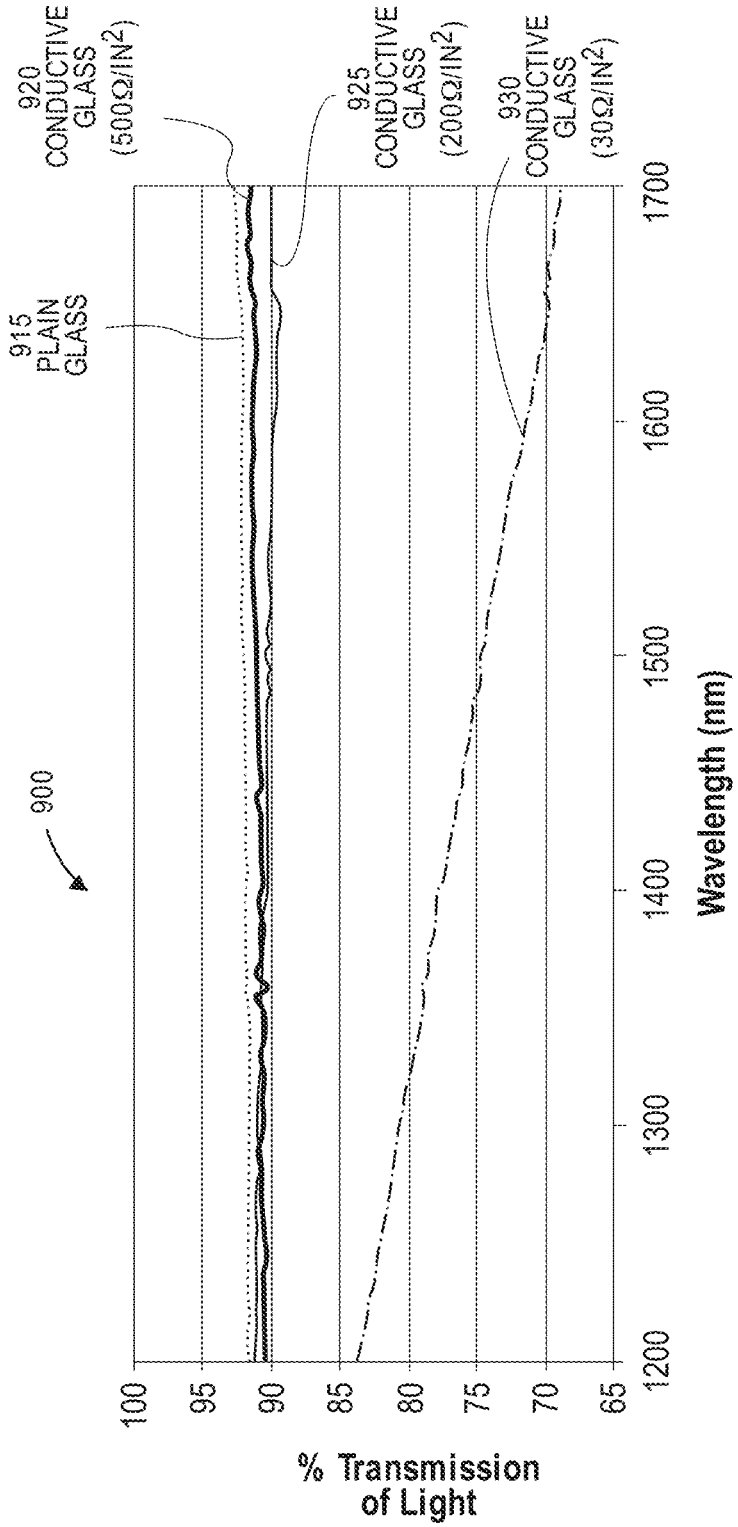

FIG. 9

Masimo Ex. 1041
IPR Petition - US D962,936

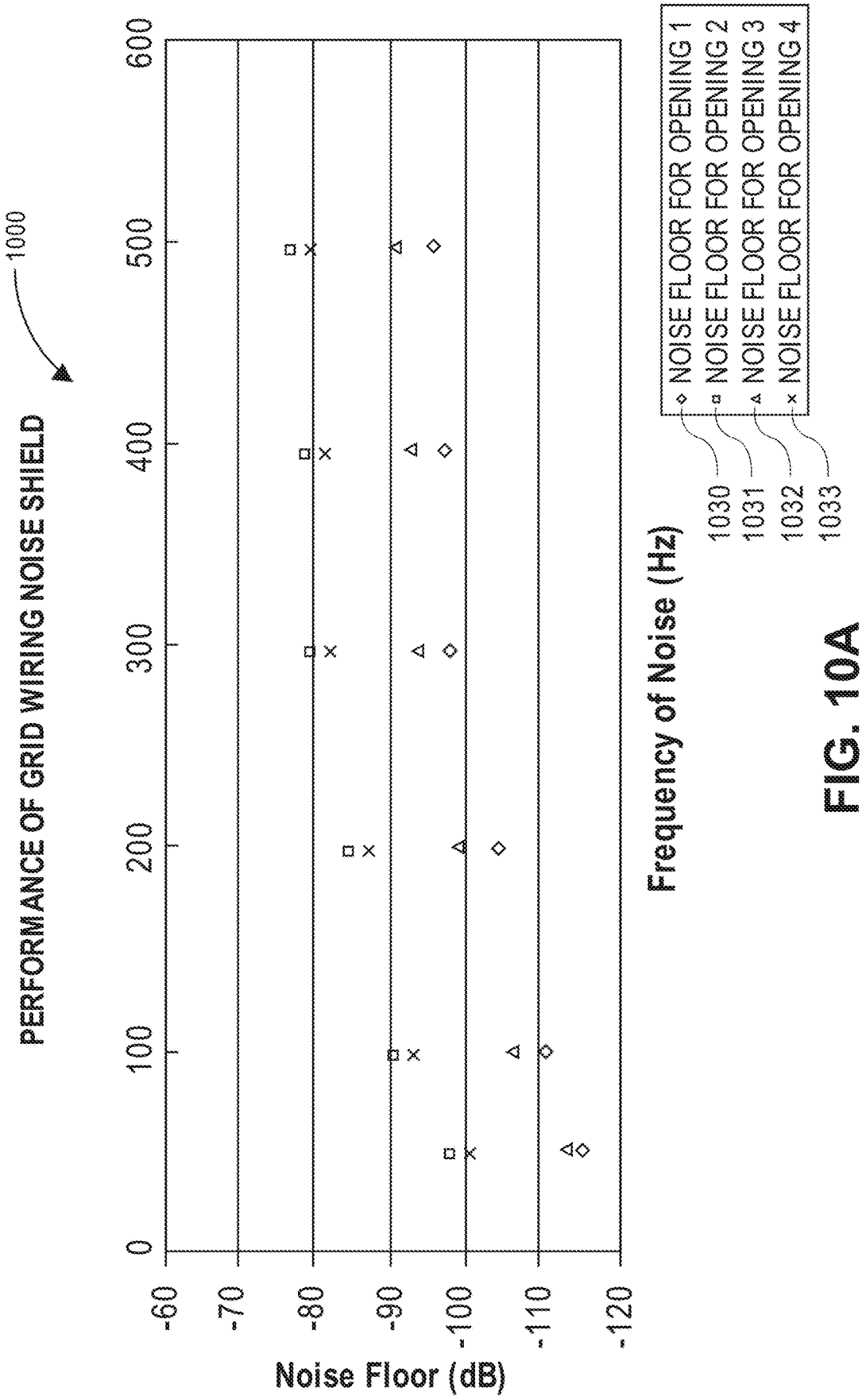

FIG. 10A

Masimo Ex. 1041
IPR Petition - US D962,936

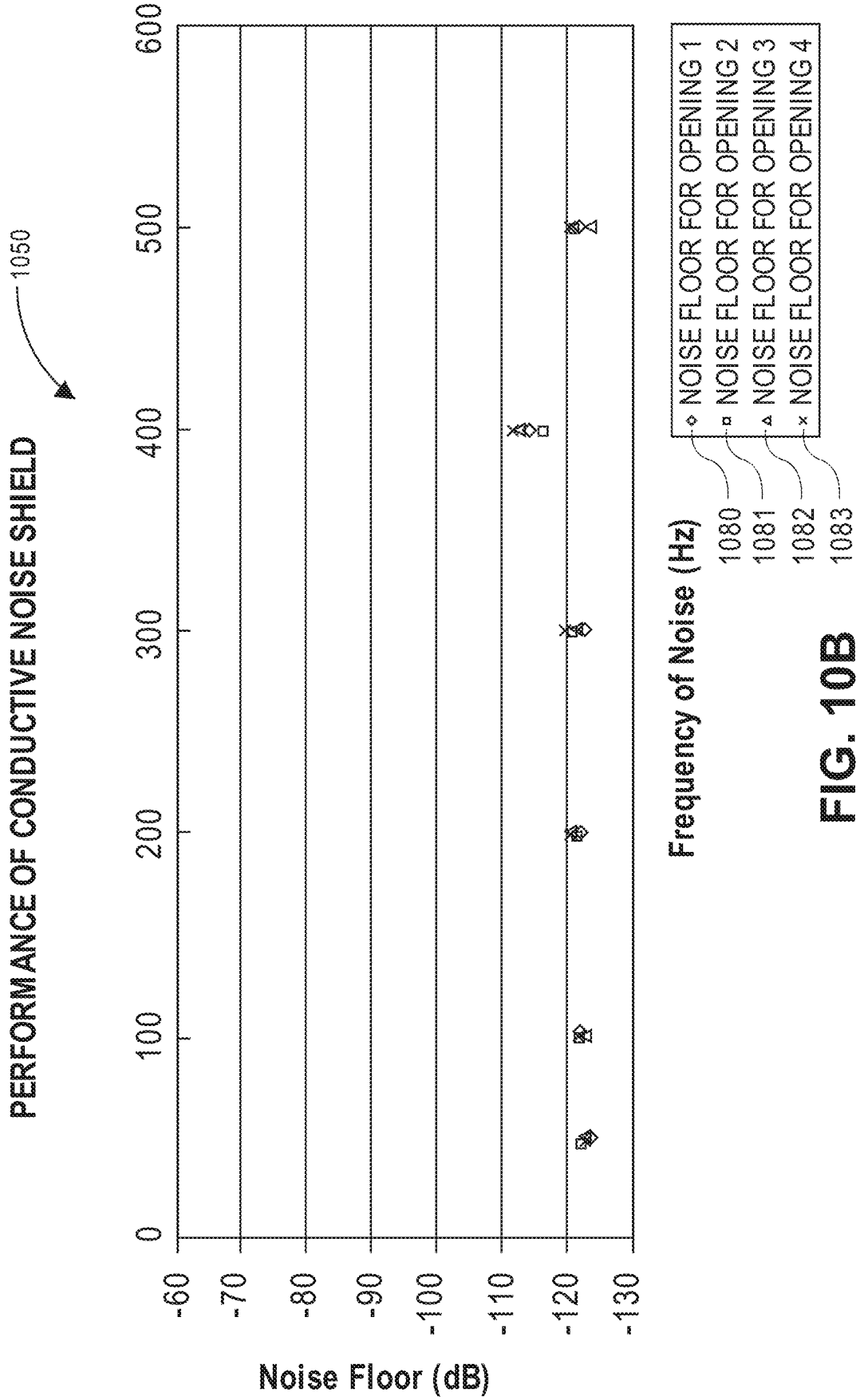
PERFORMANCE OF CONDUCTIVE NOISE SHIELD
1050
Noise Floor (dB)
-60
-70
-80
-90
-100
-110
-120
-130
0
100
200
300
400
500
600
Frequency of Noise (Hz)
NOISE FLOOR FOR OPENING 1
NOISE FLOOR FOR OPENING 2
NOISE FLOOR FOR OPENING 3
NOISE FLOOR FOR OPENING 4
1080
1081
1082
1083

FIG. 10B

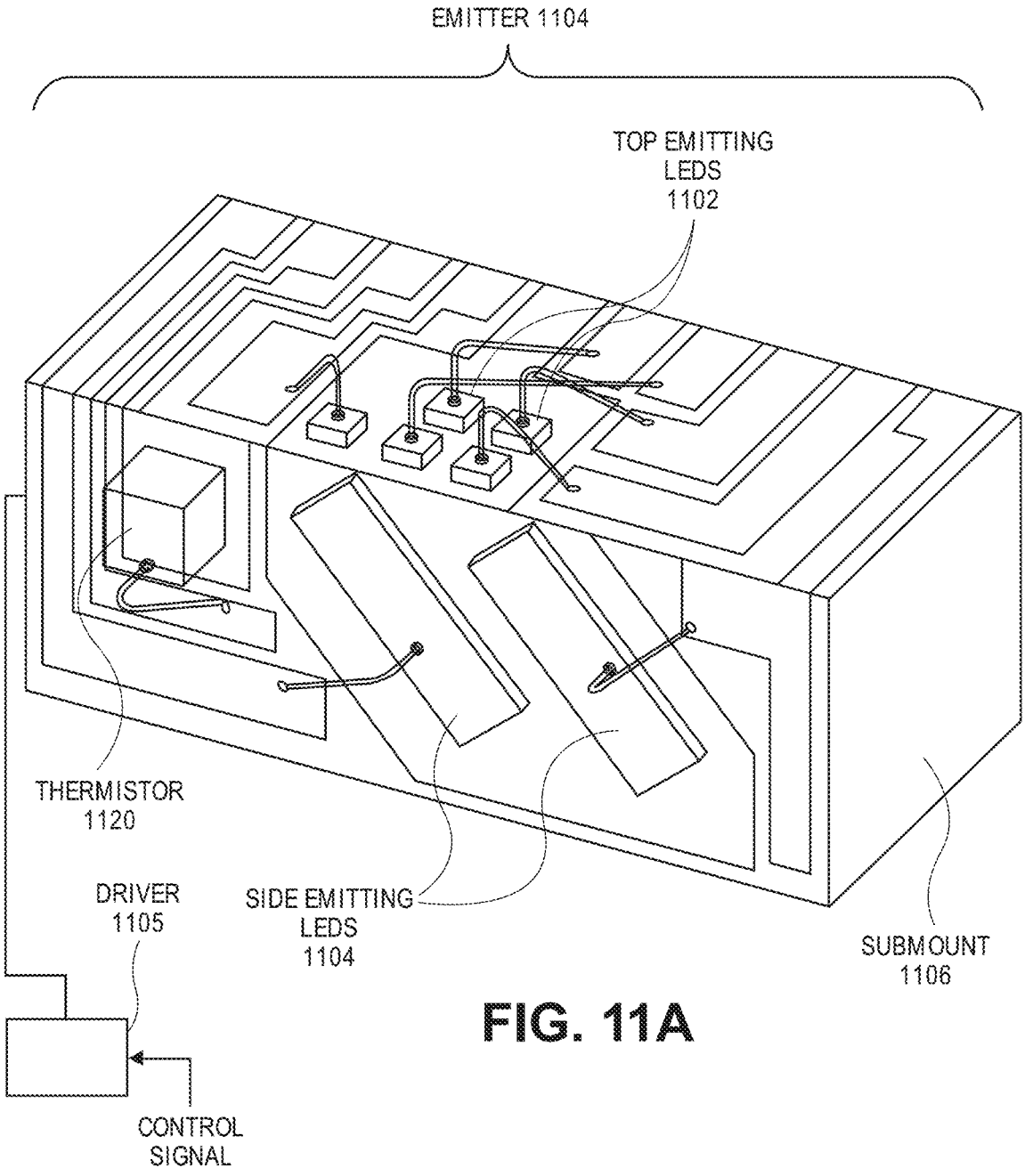

FIG. 11A

Masimo Ex. 1041
IPR Petition - US D962,936

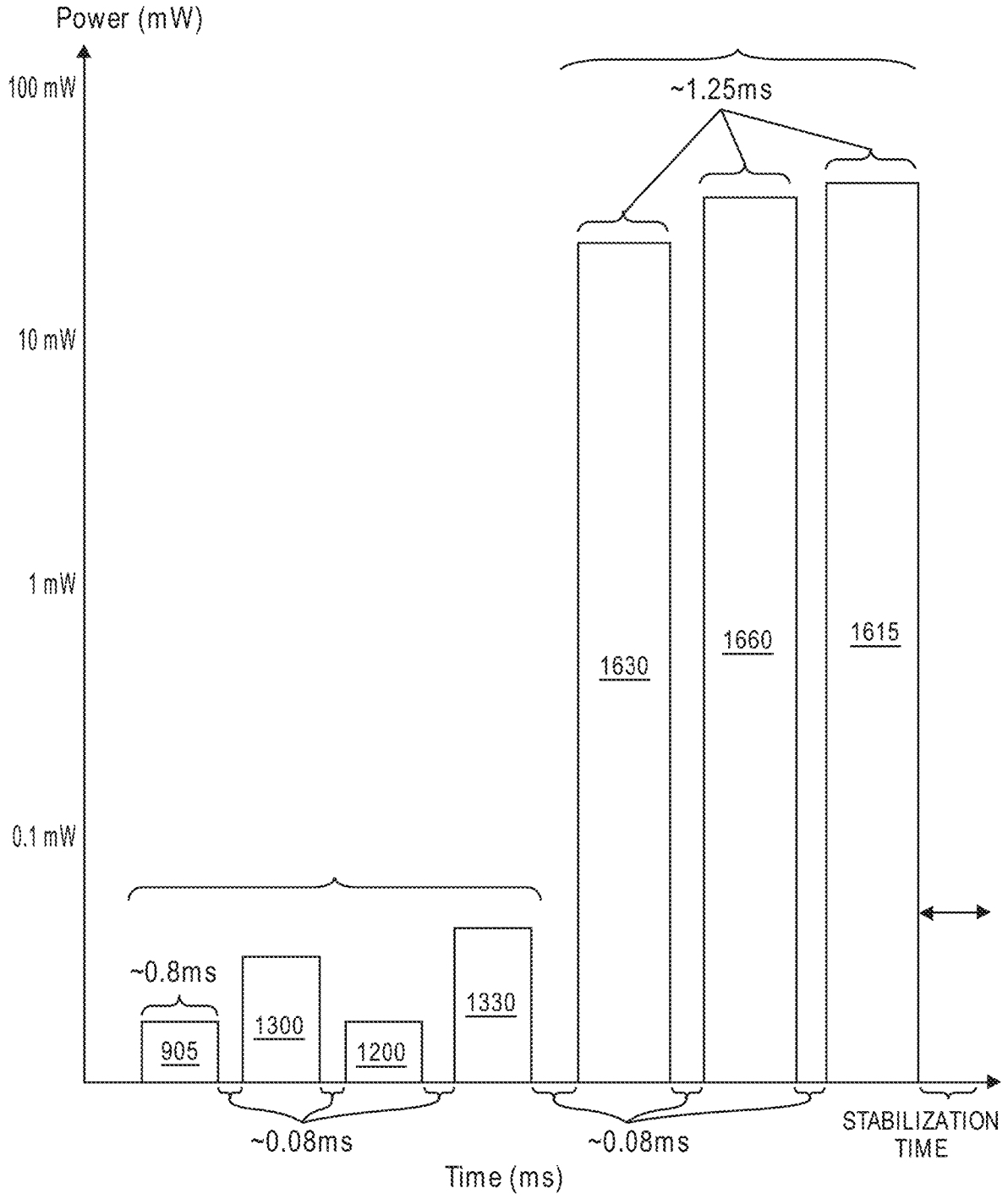

FIG. 11B

Masimo Ex. 1041
IPR Petition - US D962,936

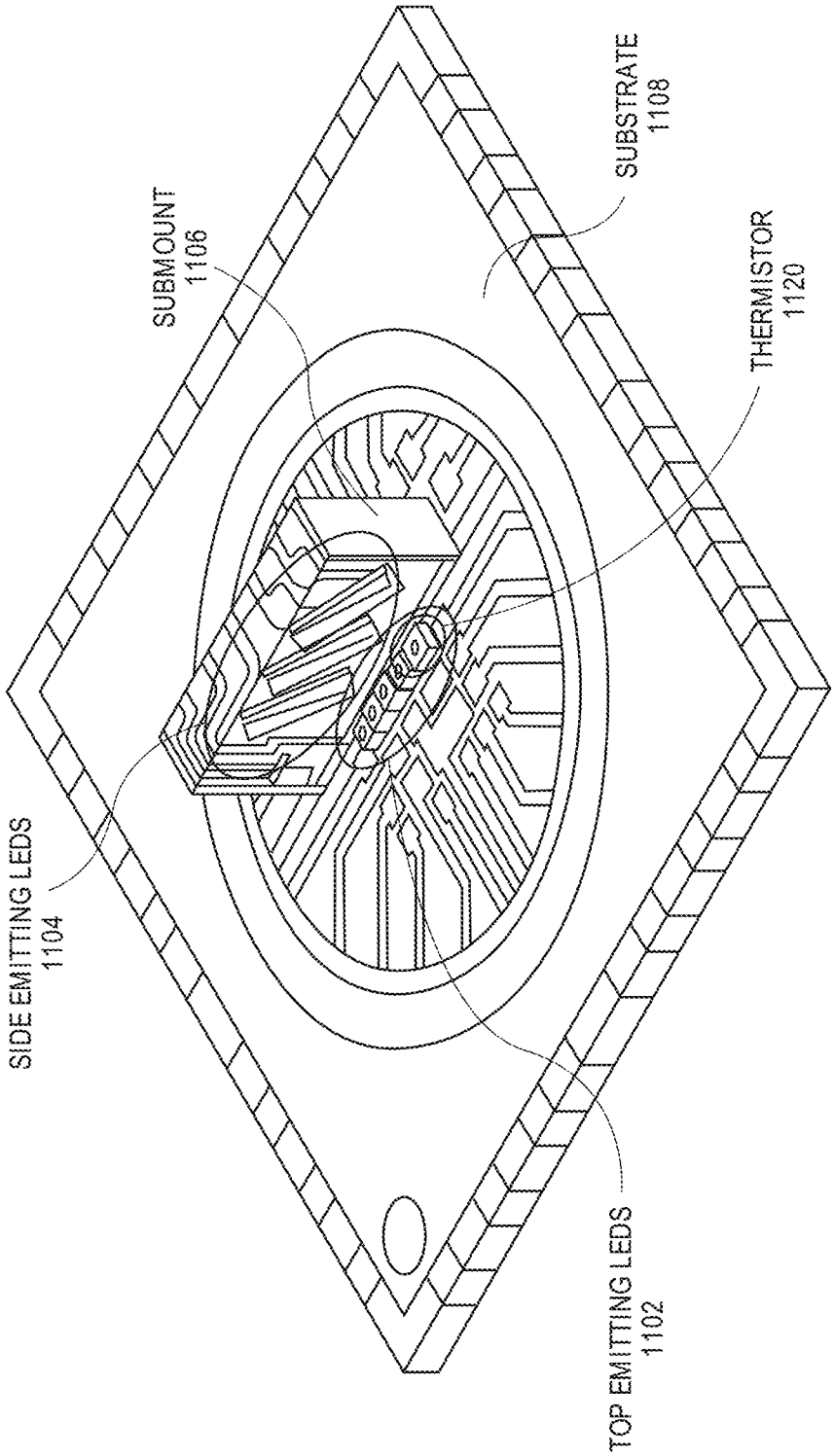

FIG. 11C

Masimo Ex. 1041
IPR Petition - US D962,936

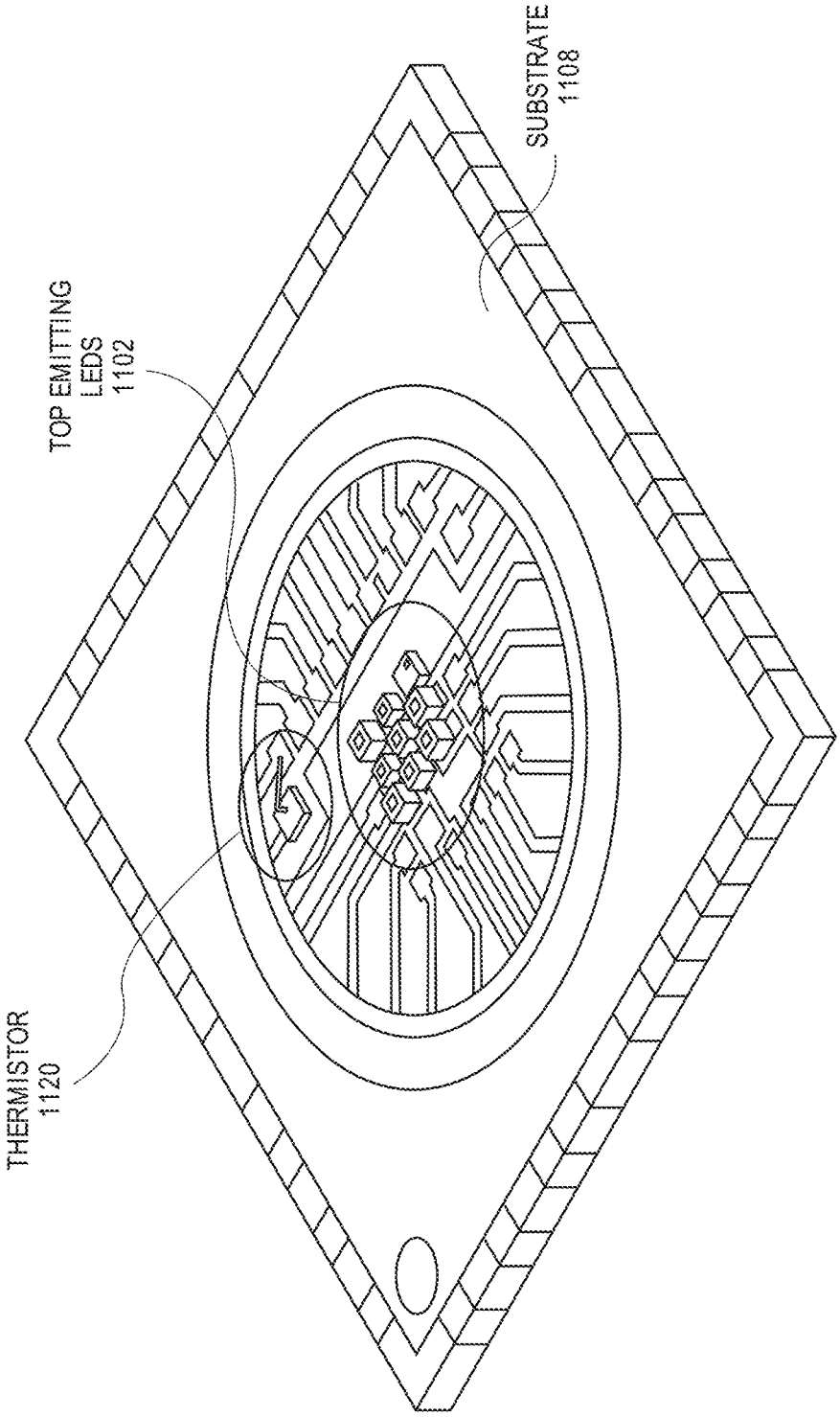

FIG. 11D

Masimo Ex. 1041
IPR Petition - US D962,936

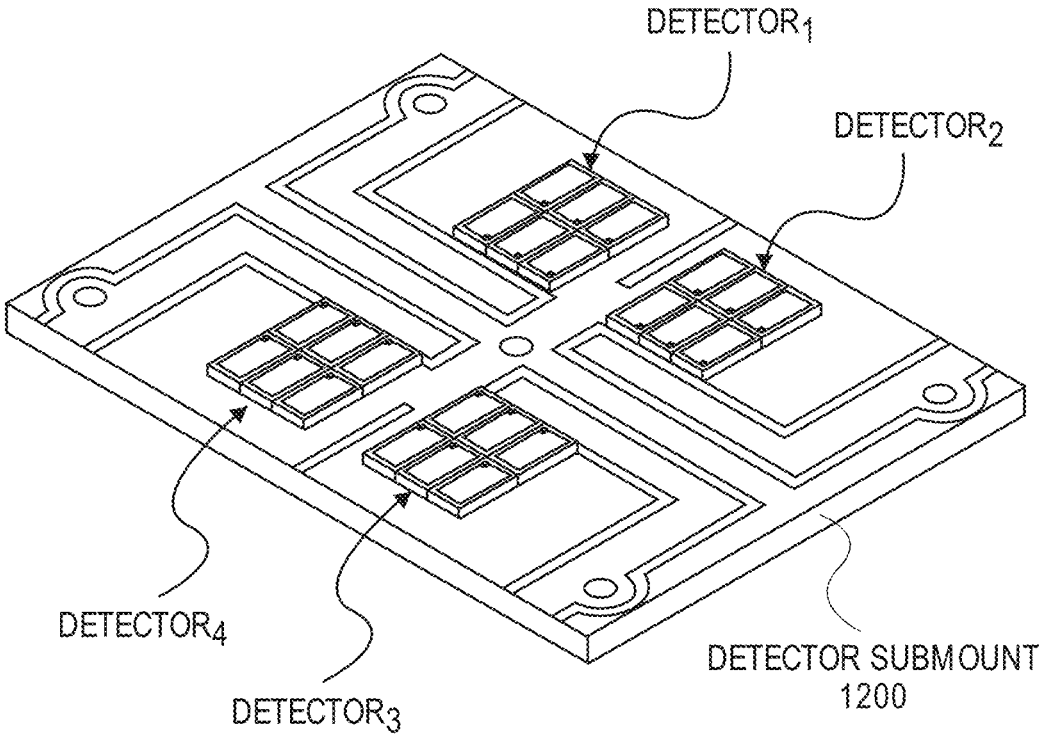
DETECTOR$_1$
DETECTOR$_2$
DETECTOR$_4$
DETECTOR$_3$
DETECTOR SUBMOUNT
1200

FIG. 12A

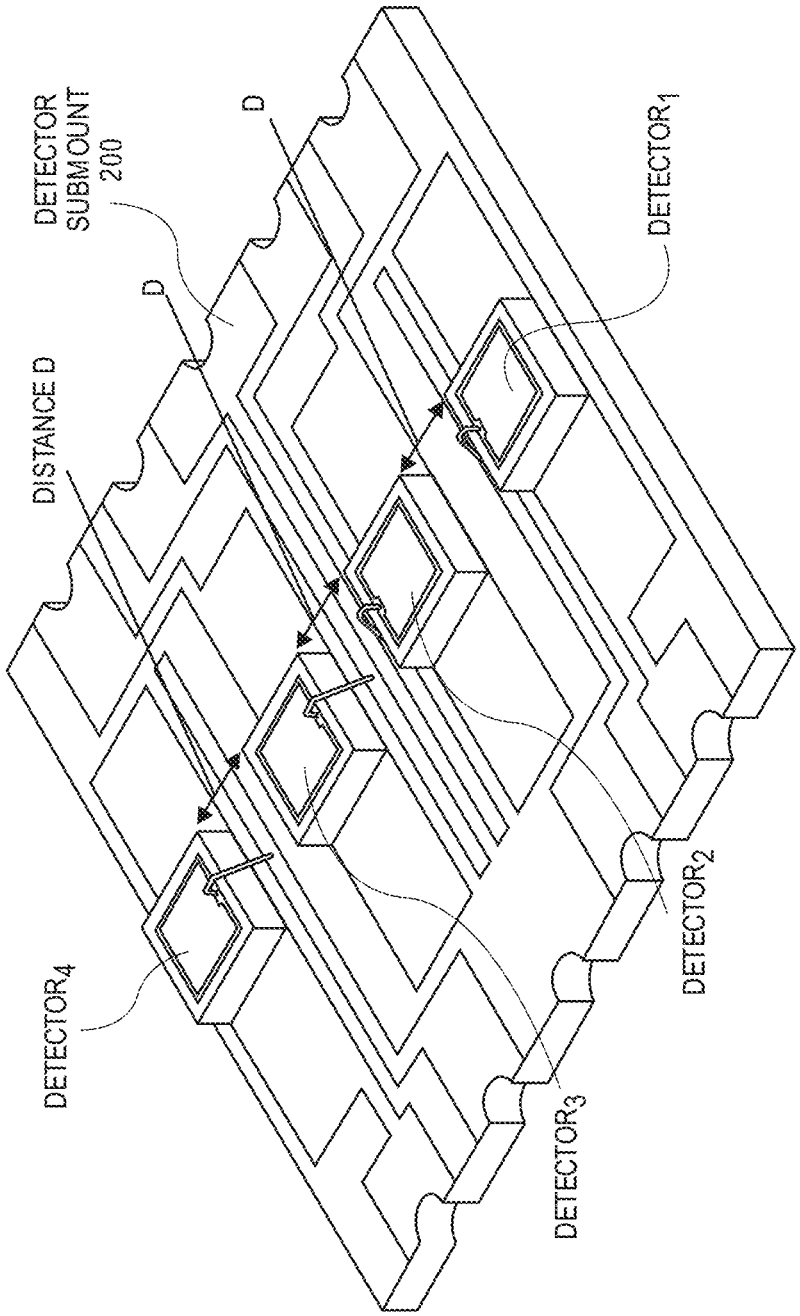

FIG. 12B

Masimo Ex. 1041
IPR Petition - US D962,936

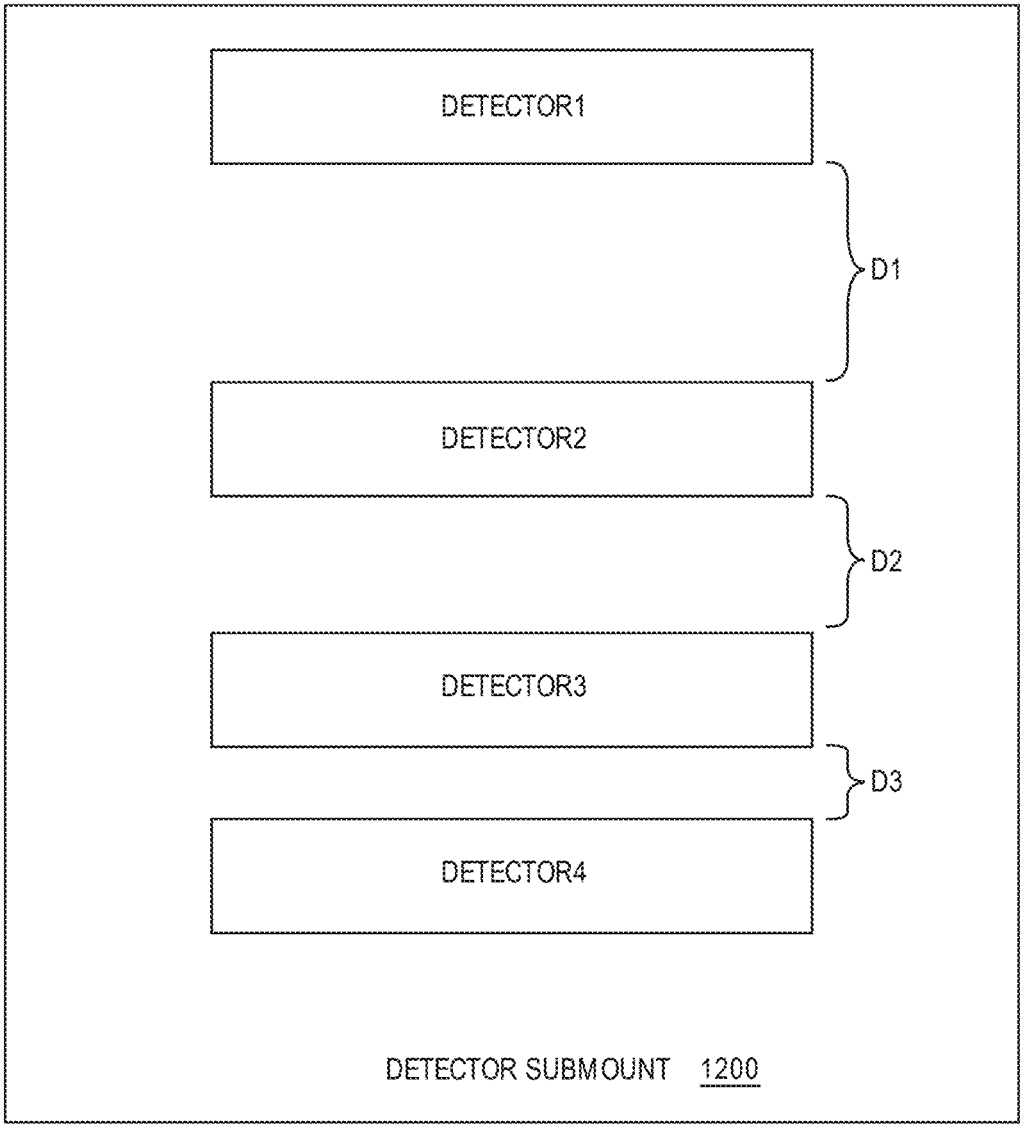

FIG. 12C

Masimo Ex. 1041
IPR Petition - US D962,936

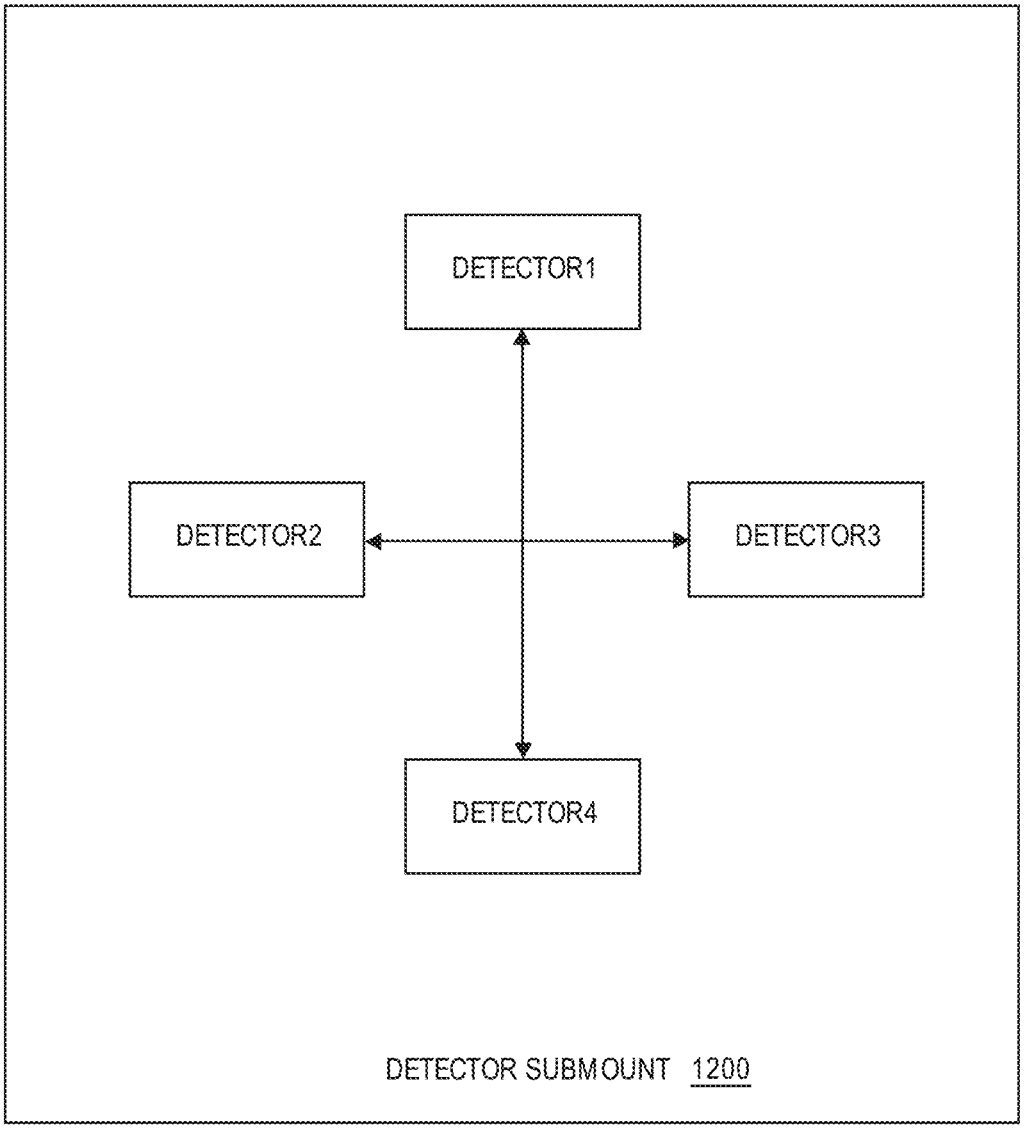
DETECTOR1
DETECTOR2
DETECTOR3
DETECTOR4
DETECTOR SUBMOUNT 1200

FIG. 12D

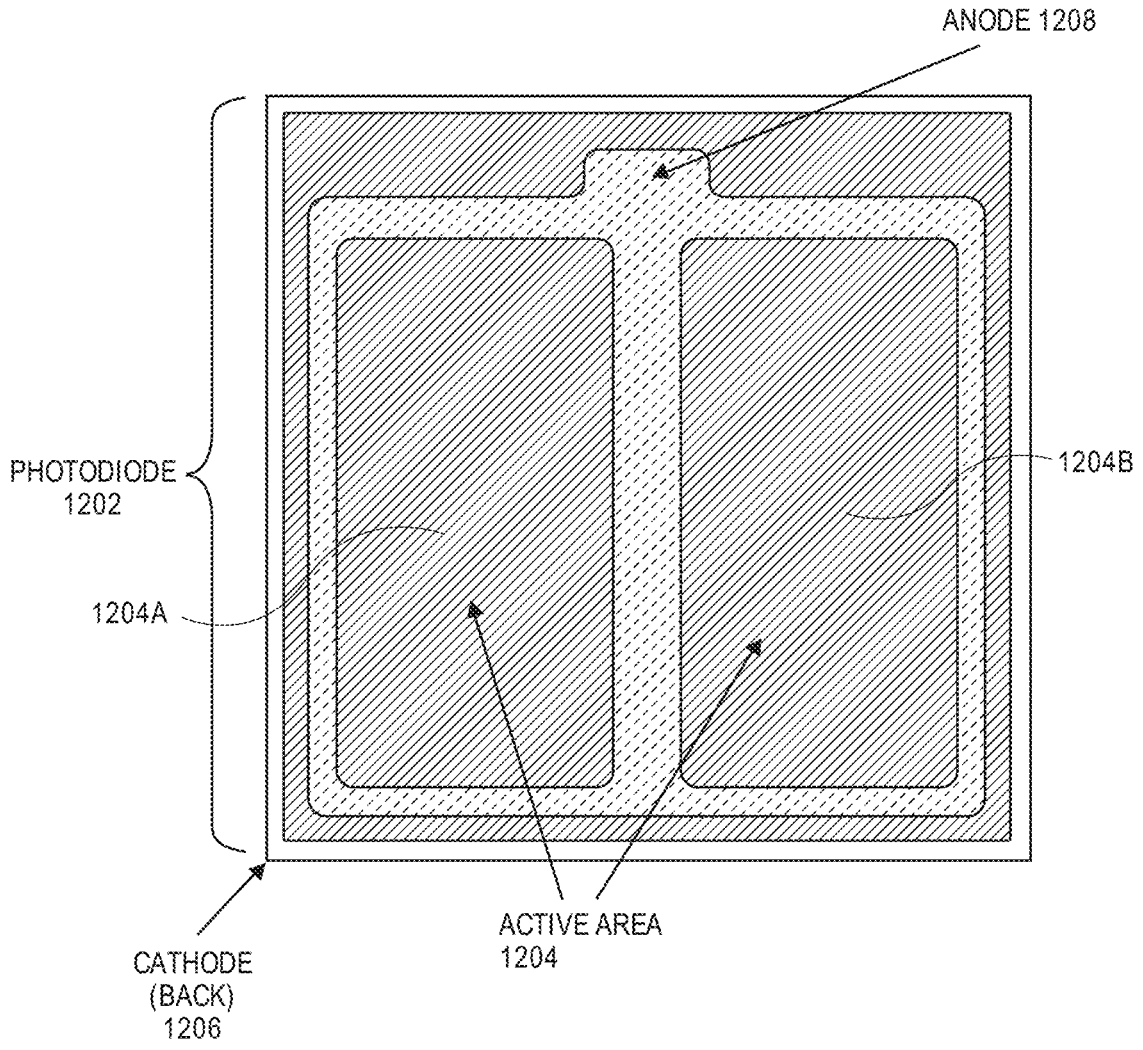

FIG. 12E

Masimo Ex. 1041
IPR Petition - US D962,936

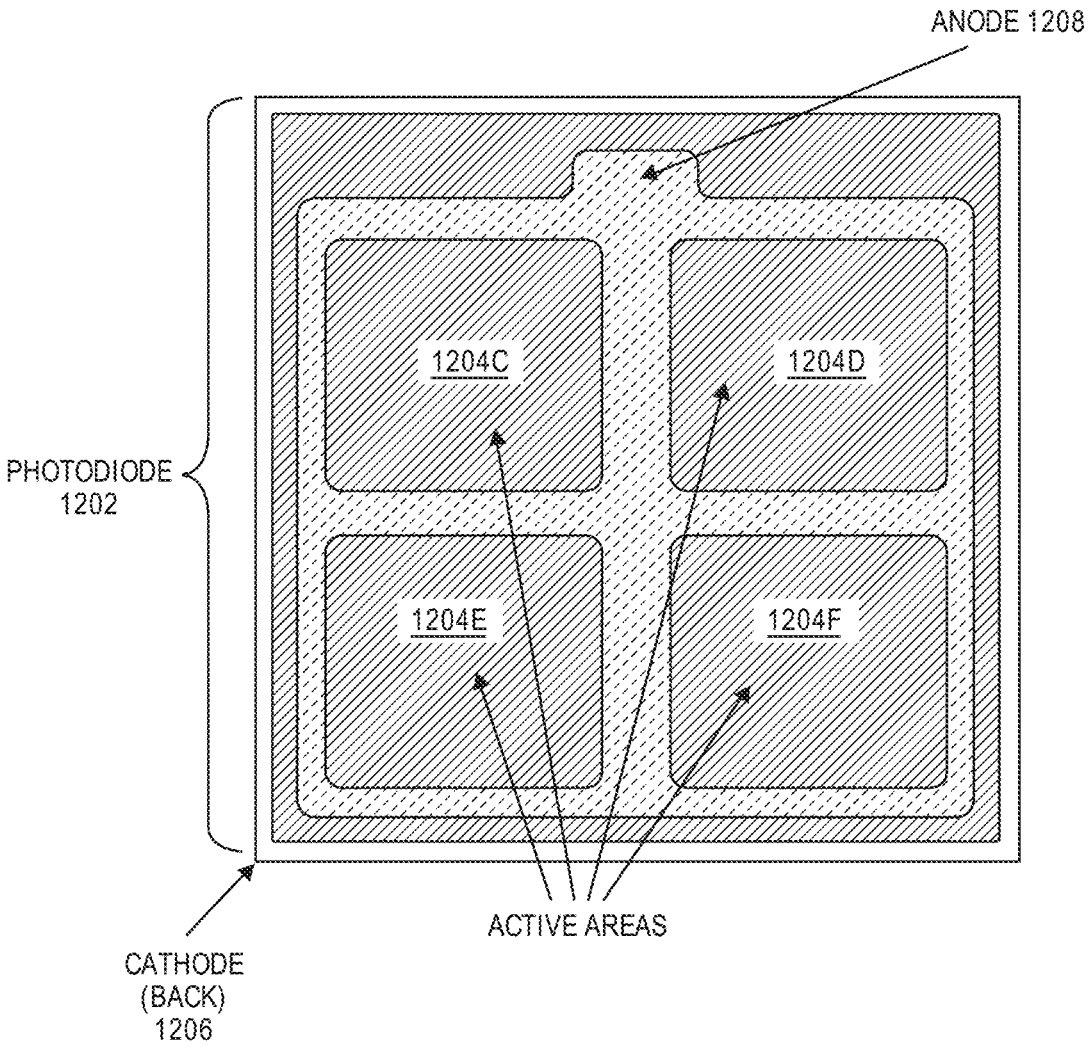

FIG. 12F

Masimo Ex. 1041
IPR Petition - US D962,936

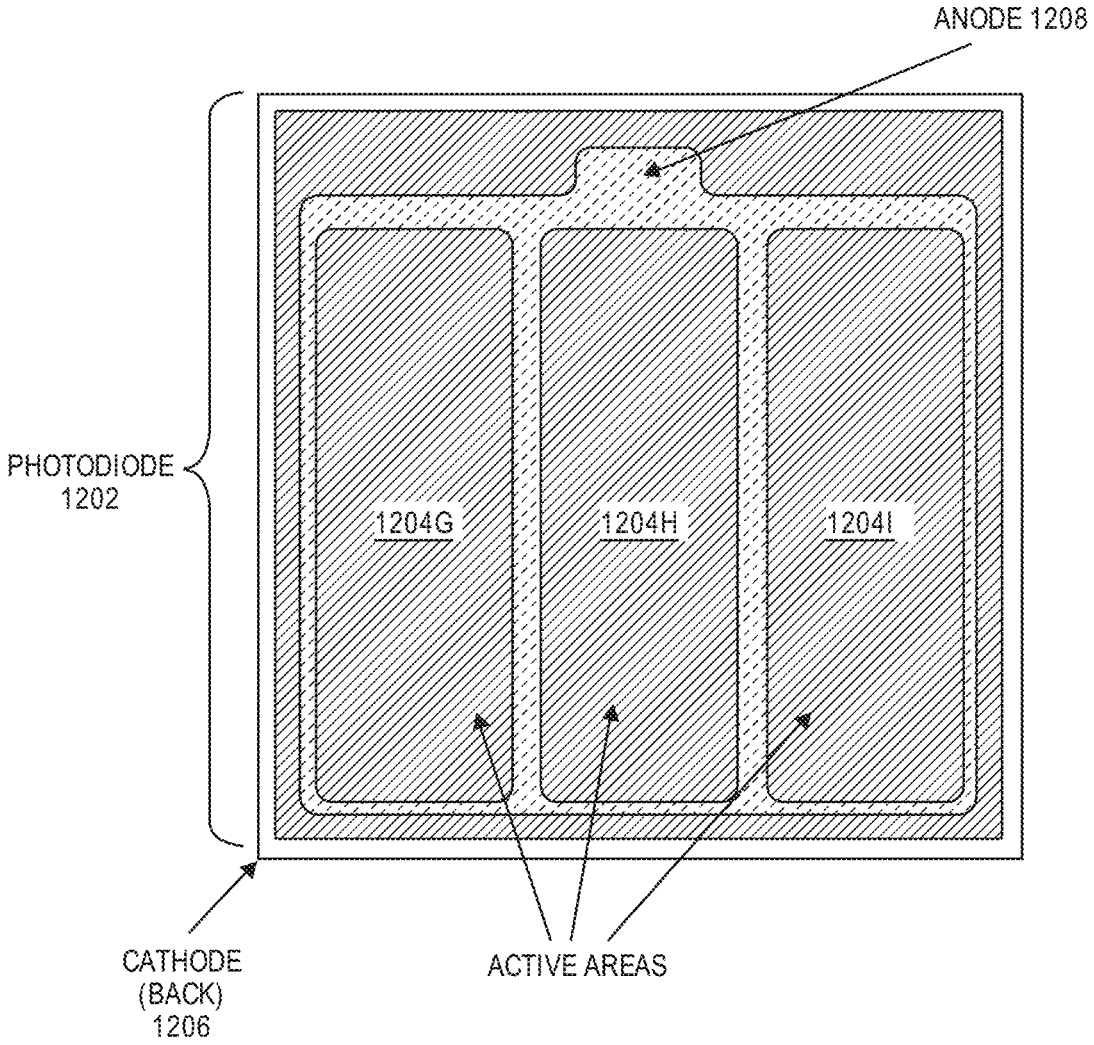

FIG. 12G

Masimo Ex. 1041
IPR Petition - US D962,936

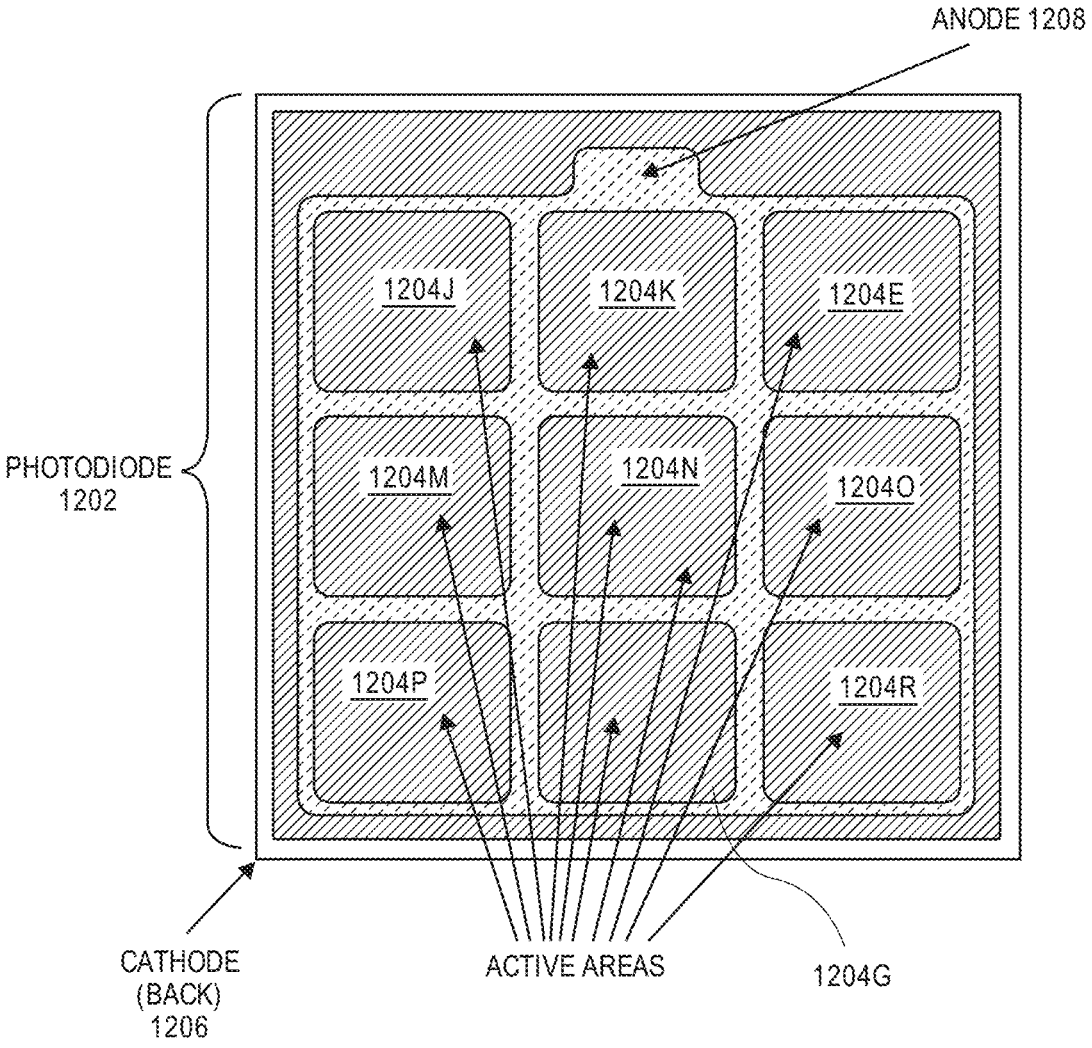

FIG. 12H

Masimo Ex. 1041
IPR Petition - US D962,936

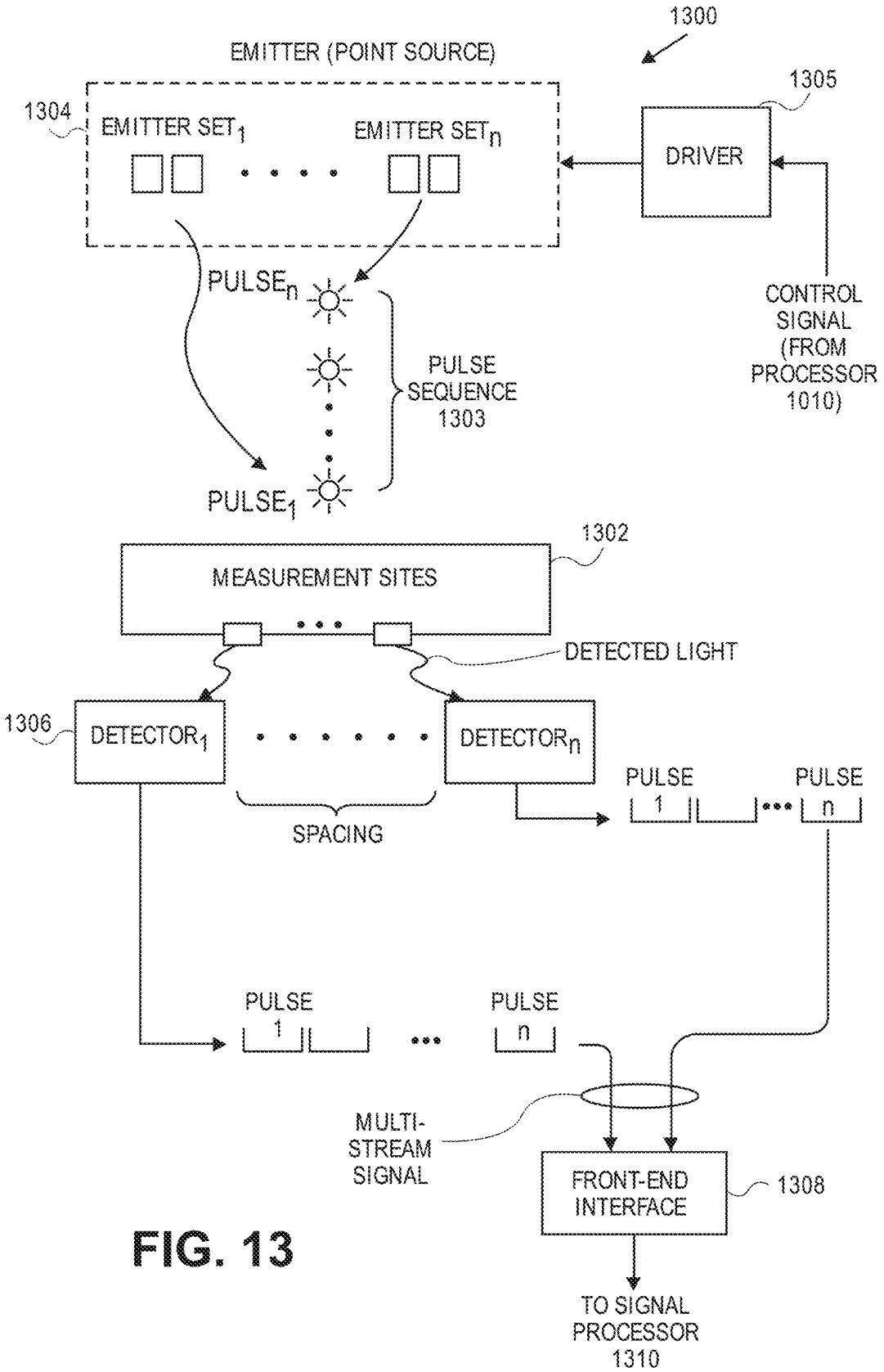

FIG. 13

Masimo Ex. 1041
IPR Petition - US D962,936

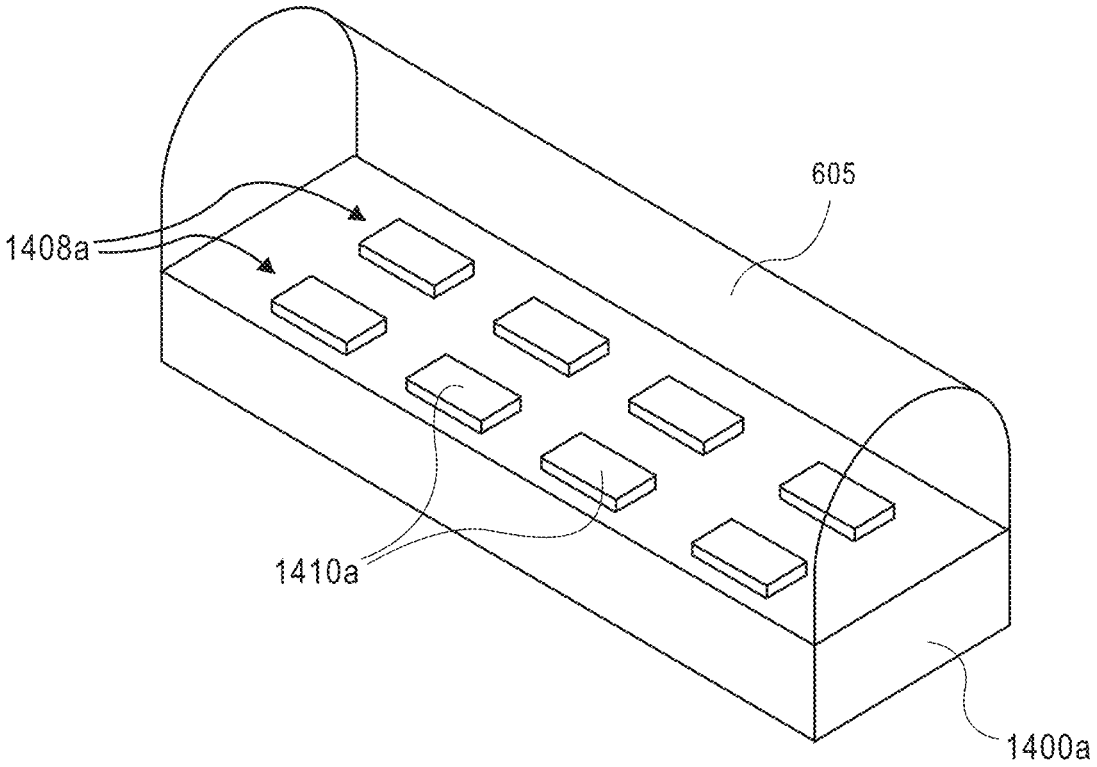

FIG. 14A

Masimo Ex. 1041
IPR Petition - US D962,936

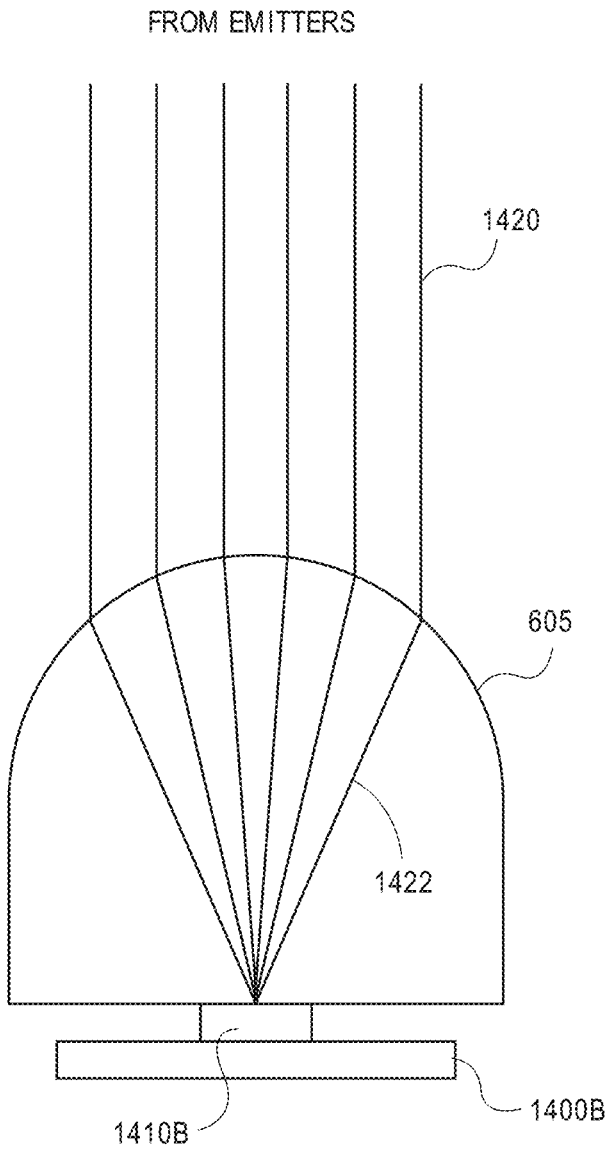

FIG. 14B

Masimo Ex. 1041
IPR Petition - US D962,936

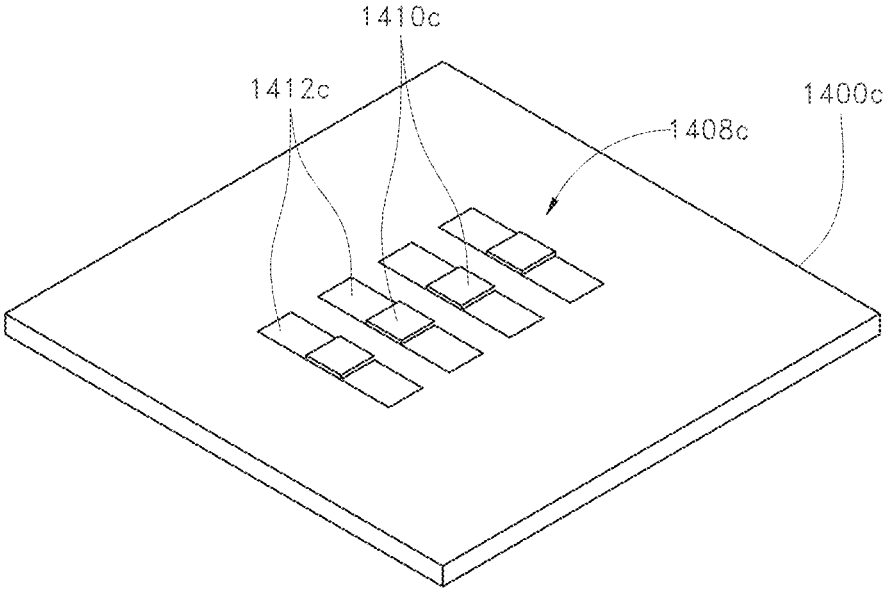

FIG. 14C

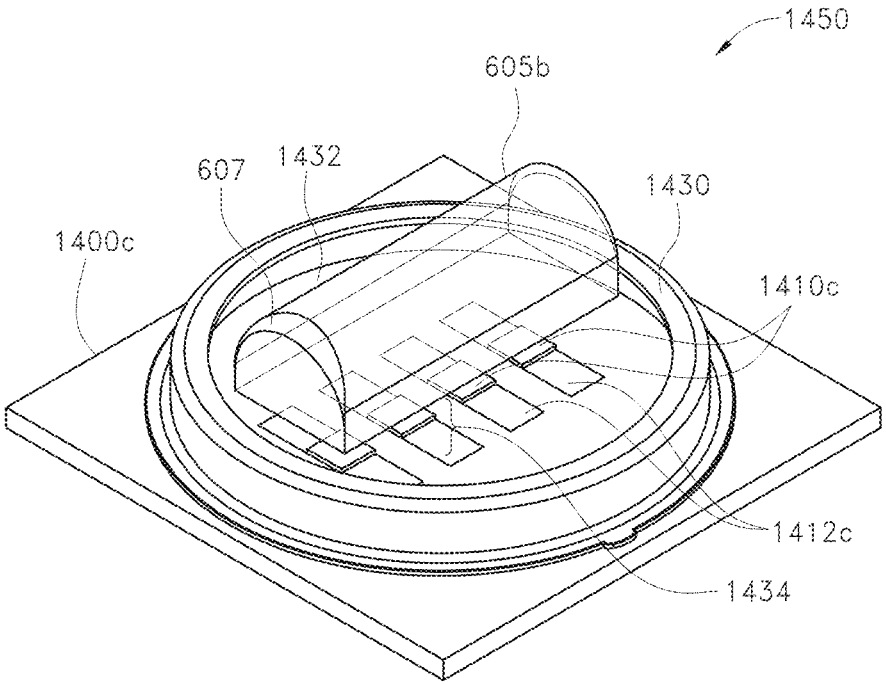

FIG. 14D

Masimo Ex. 1041
IPR Petition - US D962,936

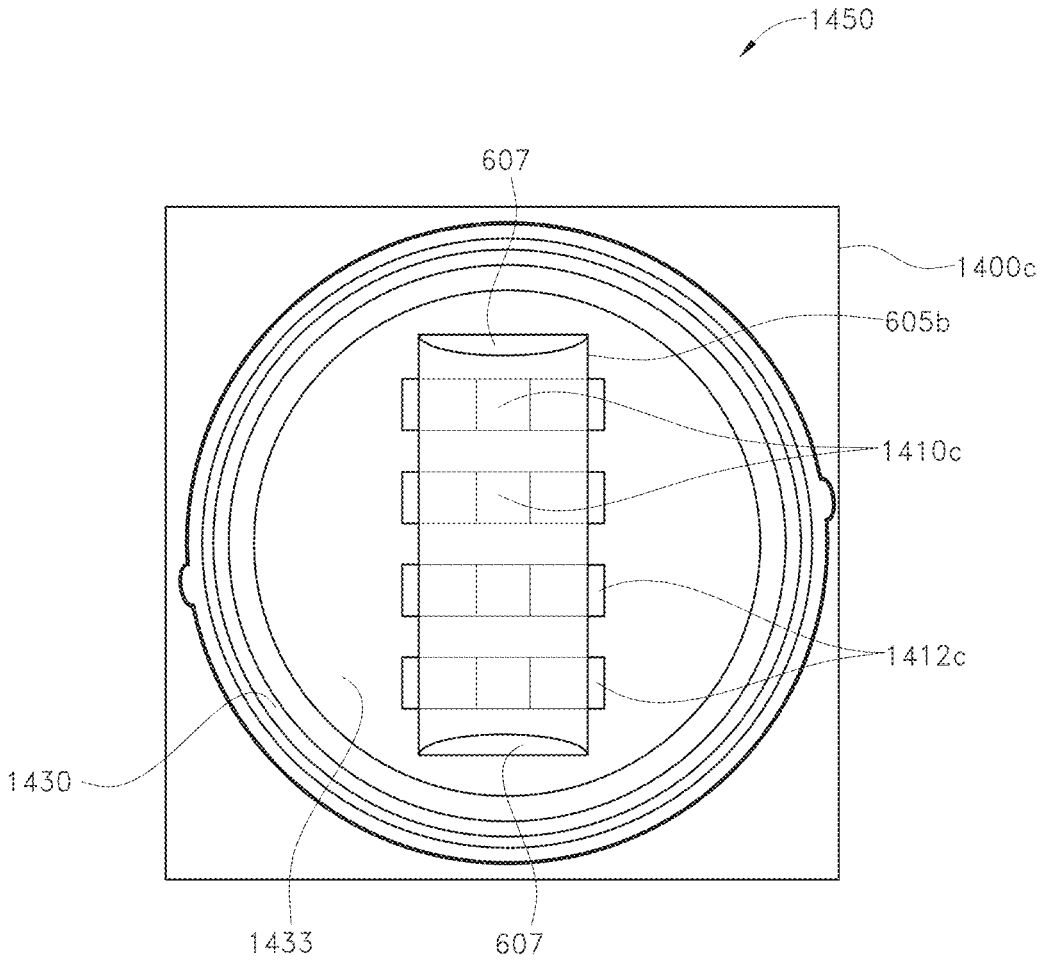

FIG. 14E

Masimo Ex. 1041
IPR Petition - US D962,936

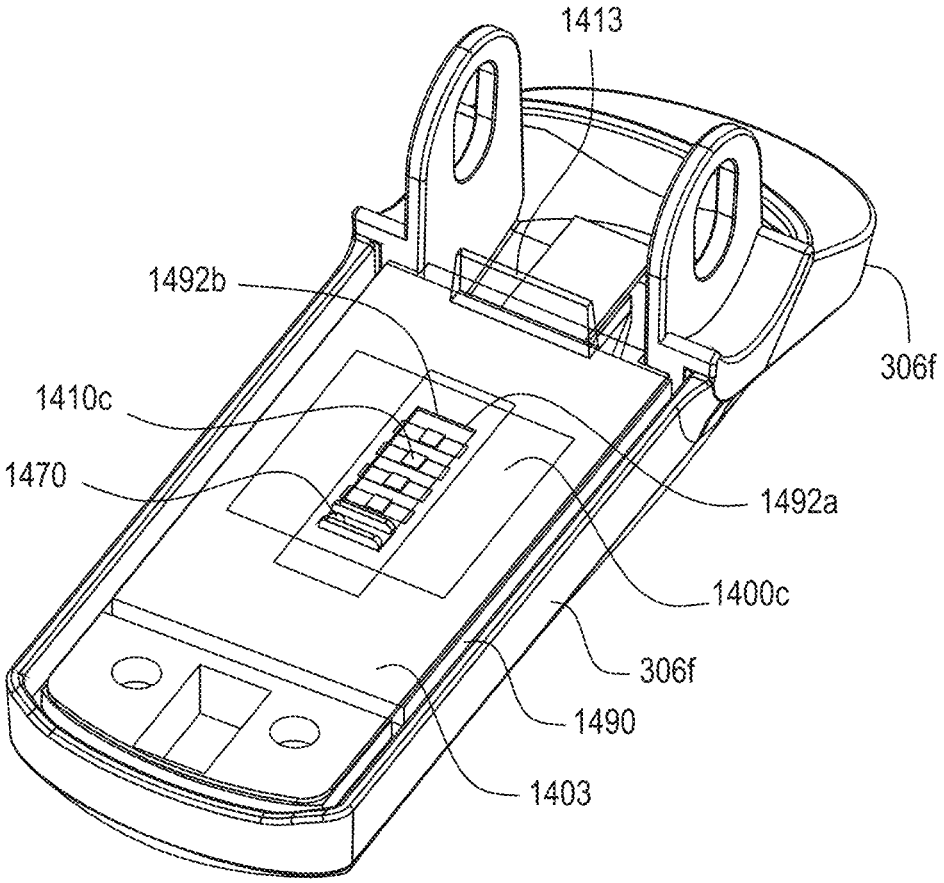

FIG. 14F

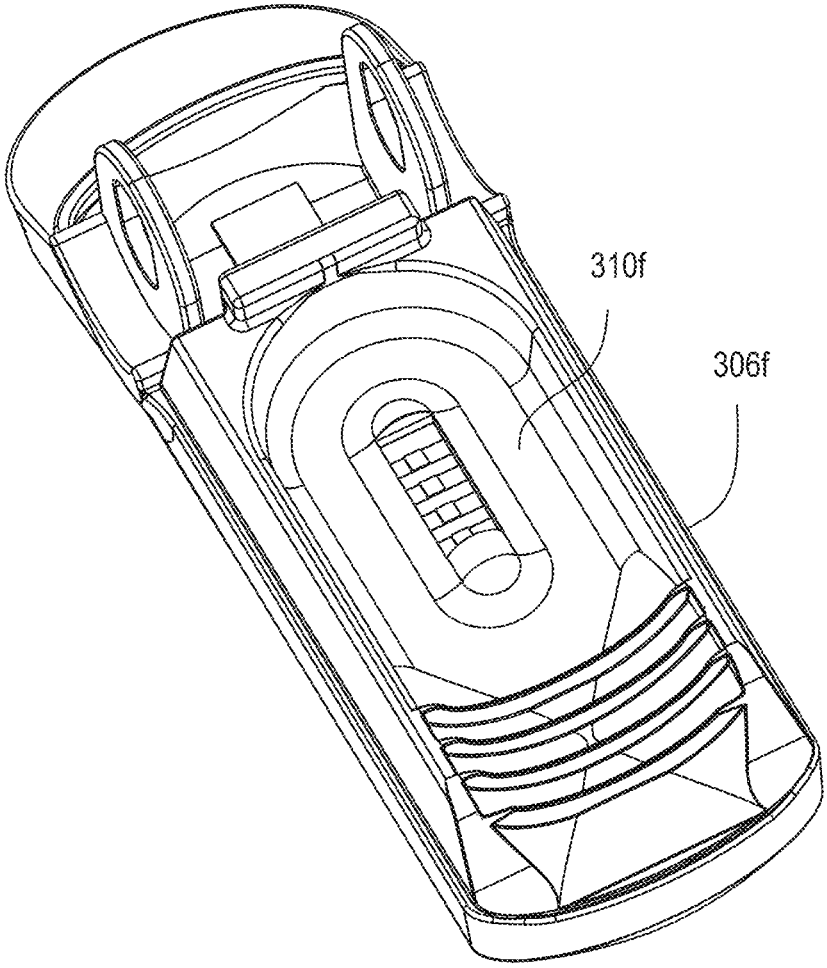

FIG. 14G

Masimo Ex. 1041
IPR Petition - US D962,936

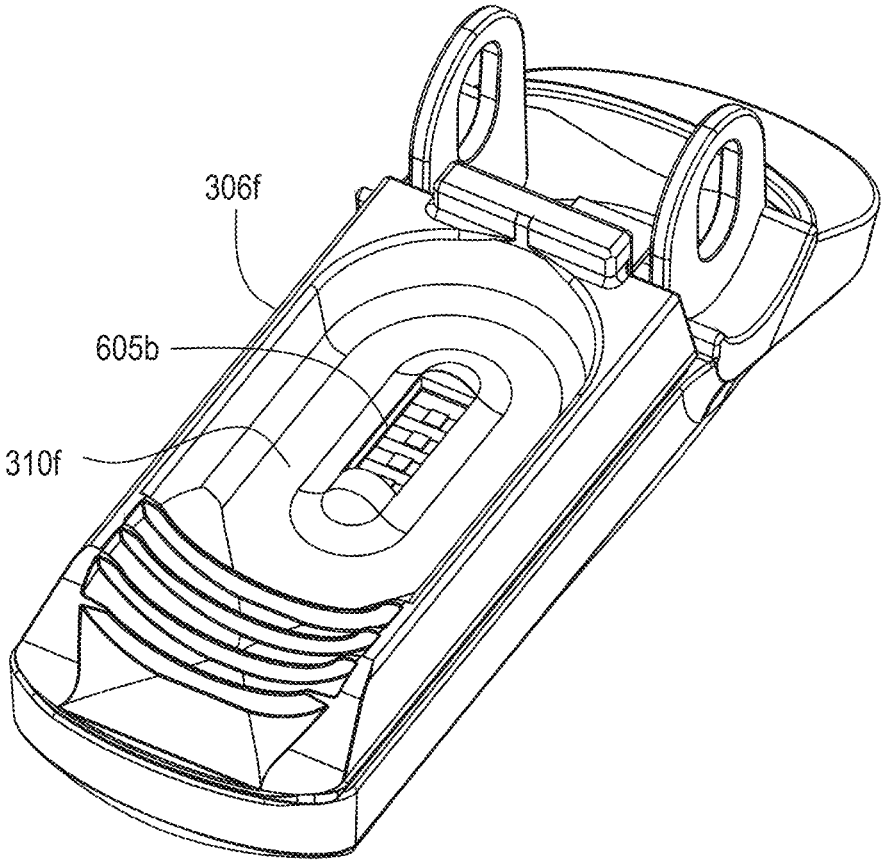

FIG. 14H

Masimo Ex. 1041
IPR Petition - US D962,936

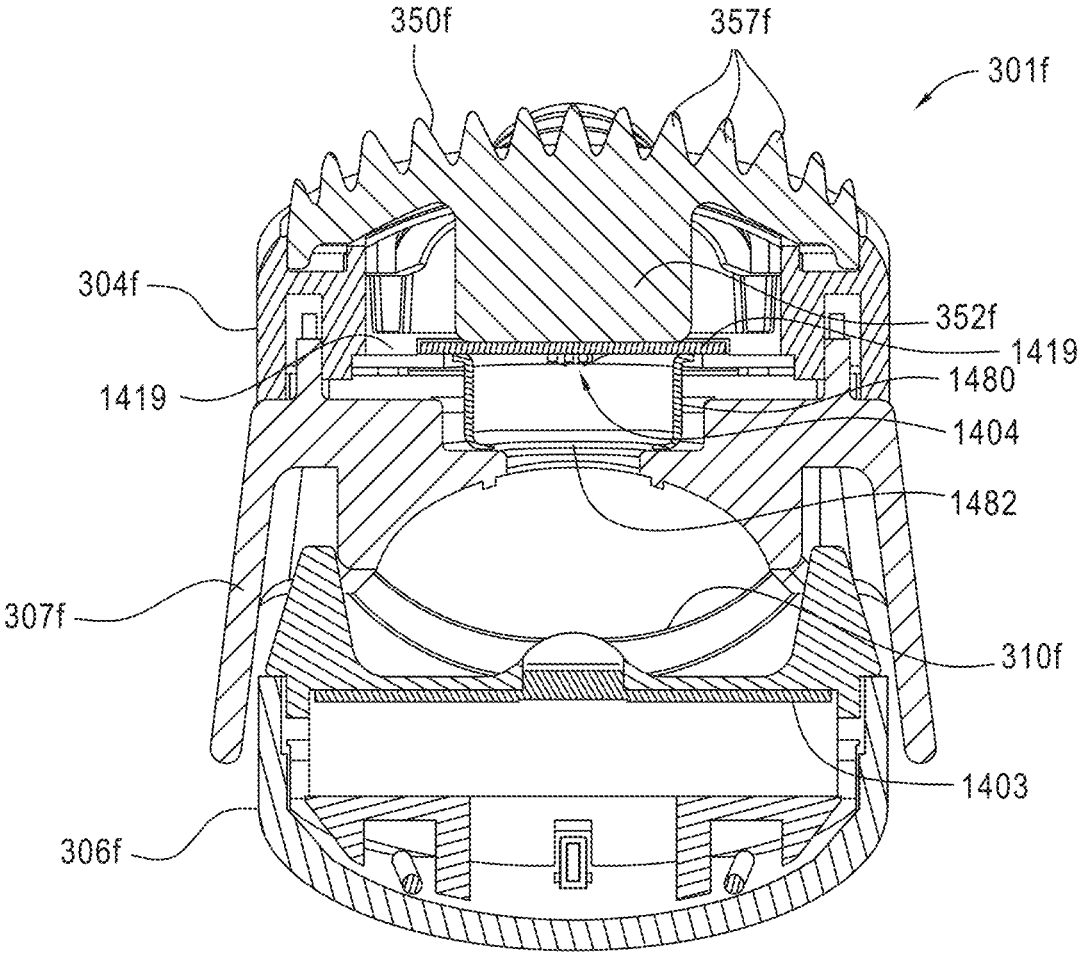
350f
357f
301f
304f
352f
1419
1419
1480
1404
1482
307f
310f
1403
306f

FIG. 14I

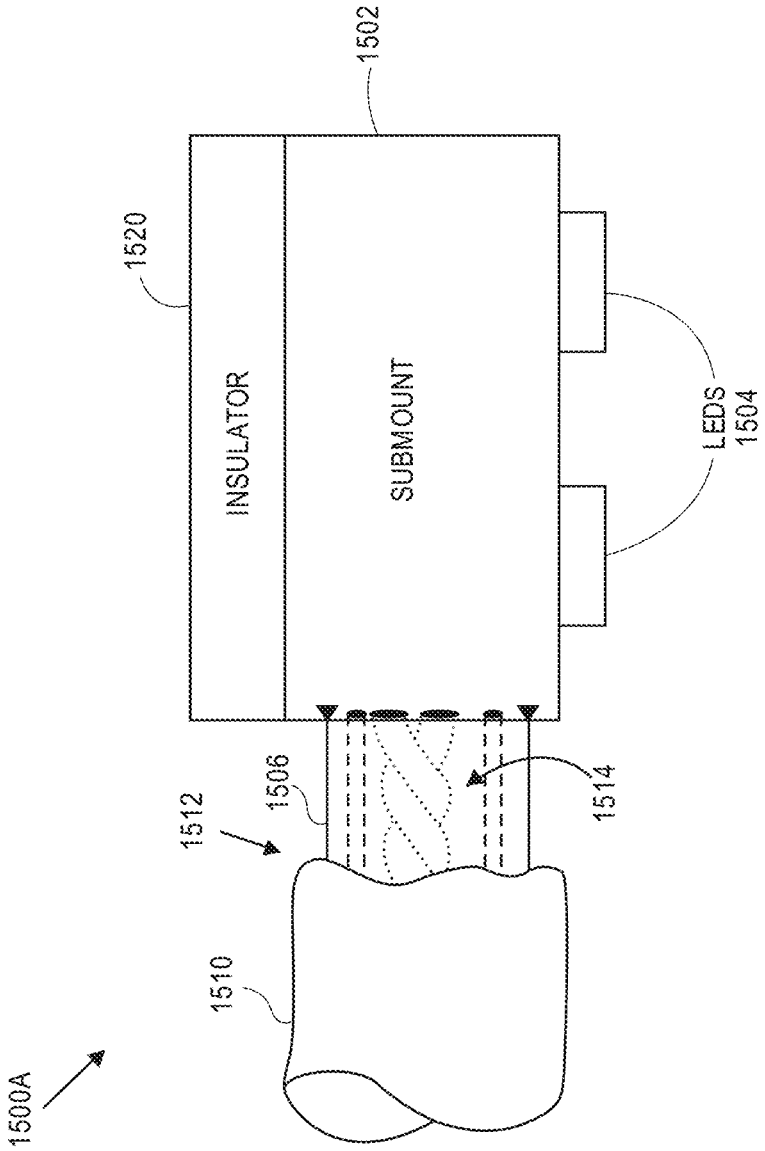

FIG. 15A

Masimo Ex. 1041
IPR Petition - US D962,936

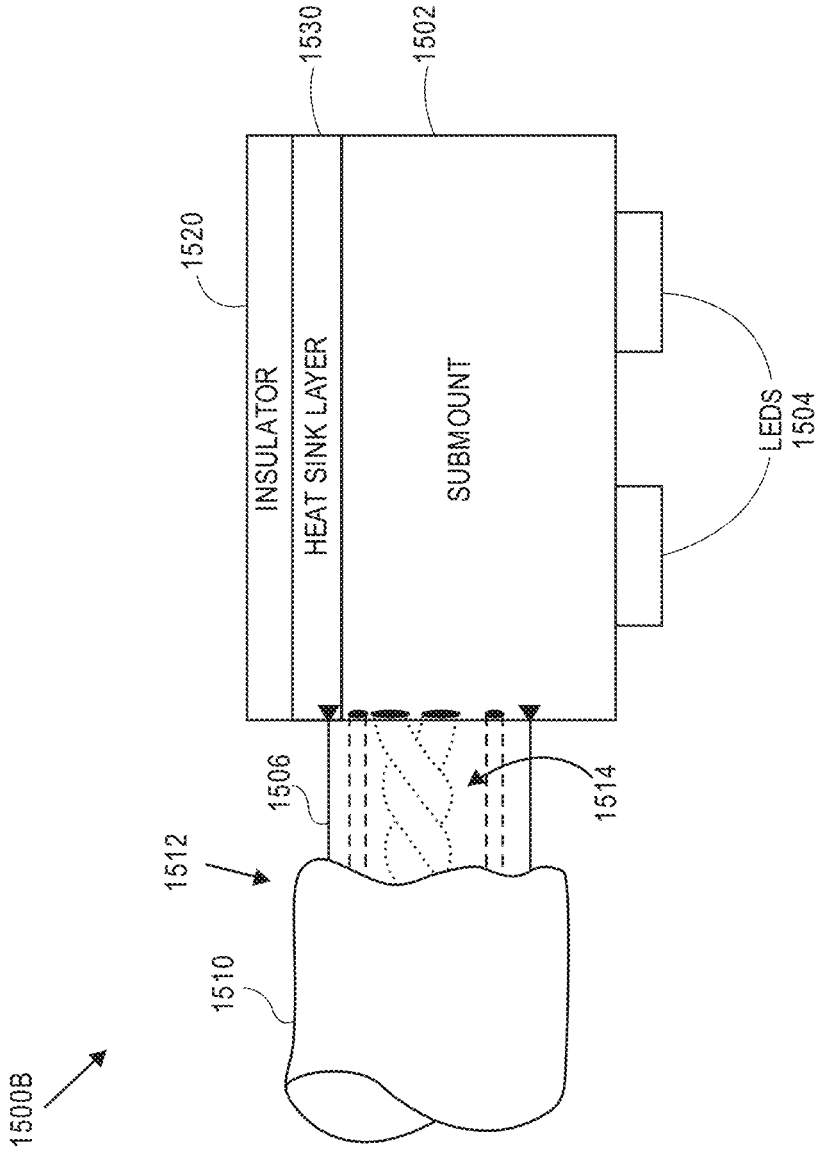

FIG. 15B

Masimo Ex. 1041
IPR Petition - US D962,936

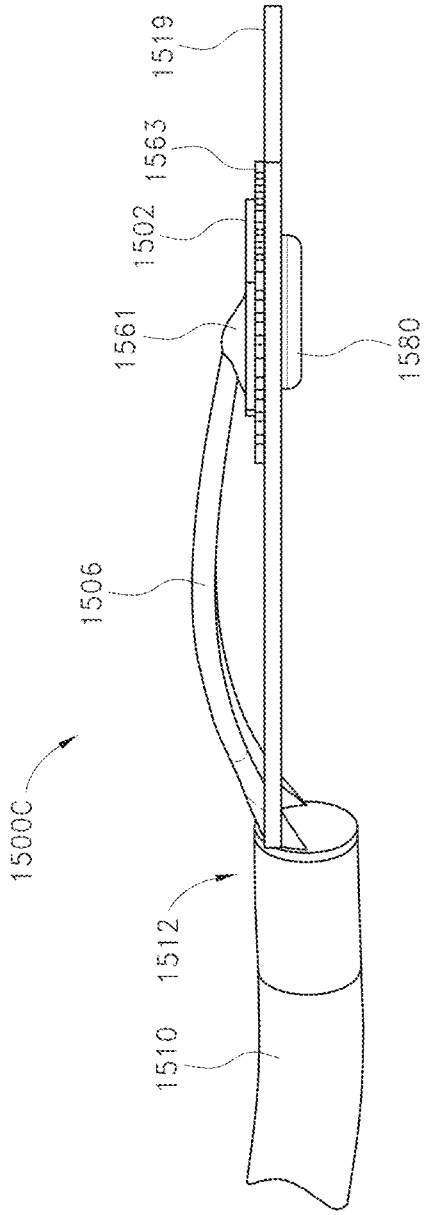

FIG. 15C

Masimo Ex. 1041
IPR Petition - US D962,936

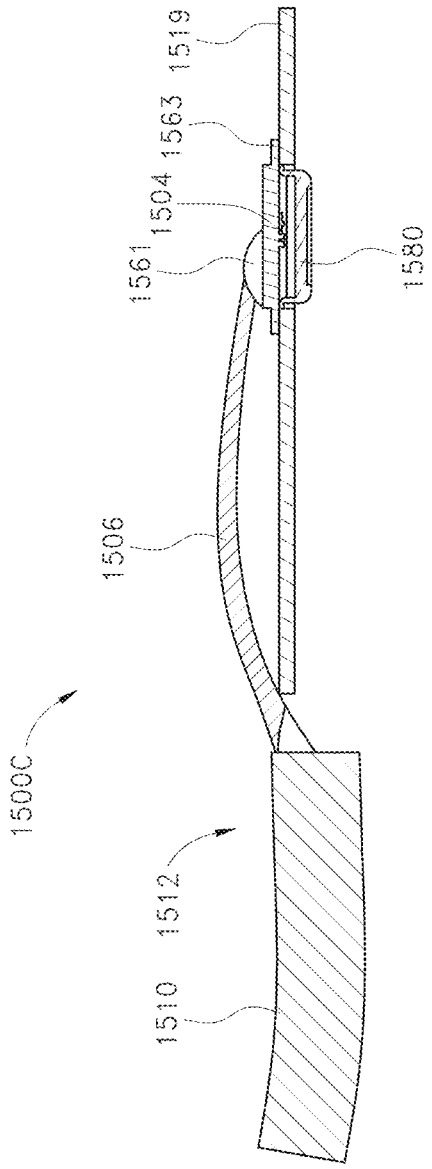

FIG. 15D

Masimo Ex. 1041
IPR Petition - US D962,936

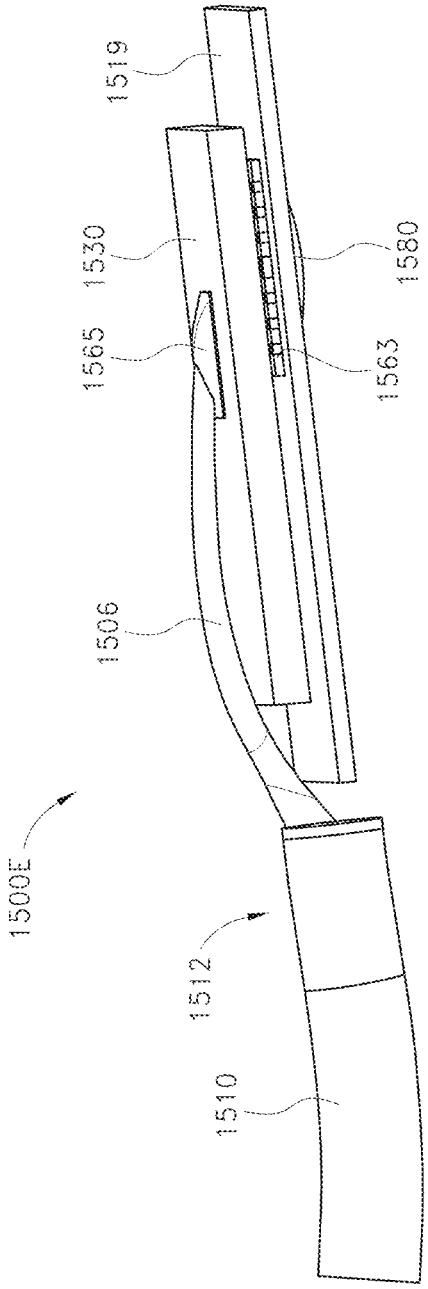

FIG. 15E

Masimo Ex. 1041
IPR Petition - US D962,936

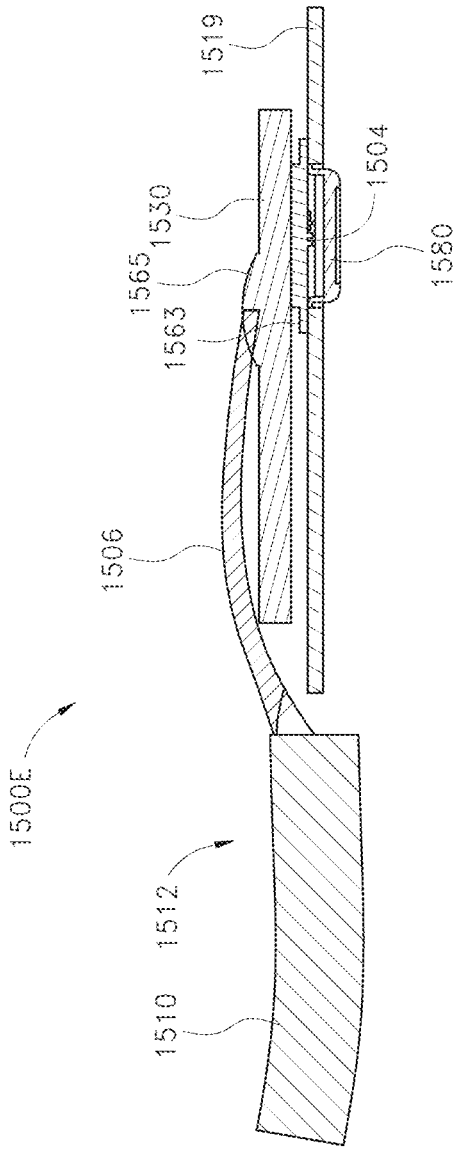

FIG. 15F

Masimo Ex. 1041
IPR Petition - US D962,936

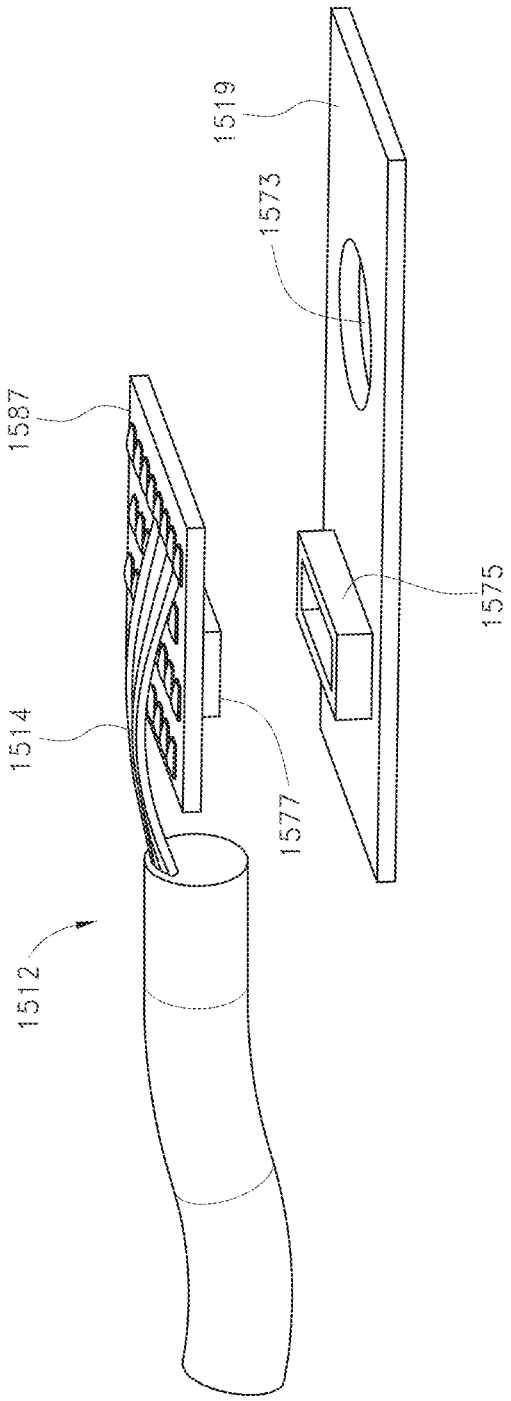

FIG. 15G

Masimo Ex. 1041
IPR Petition - US D962,936

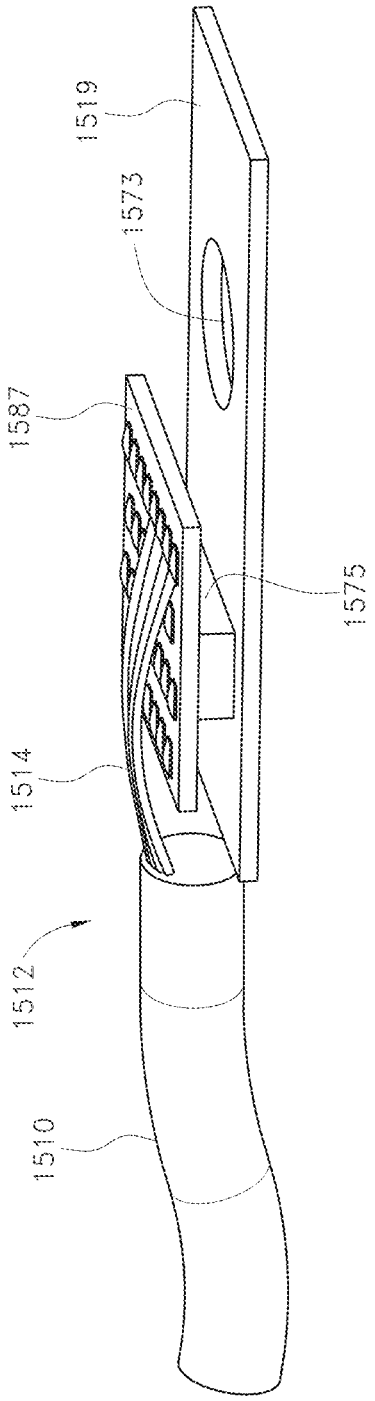

FIG. 15H

Masimo Ex. 1041
IPR Petition - US D962,936

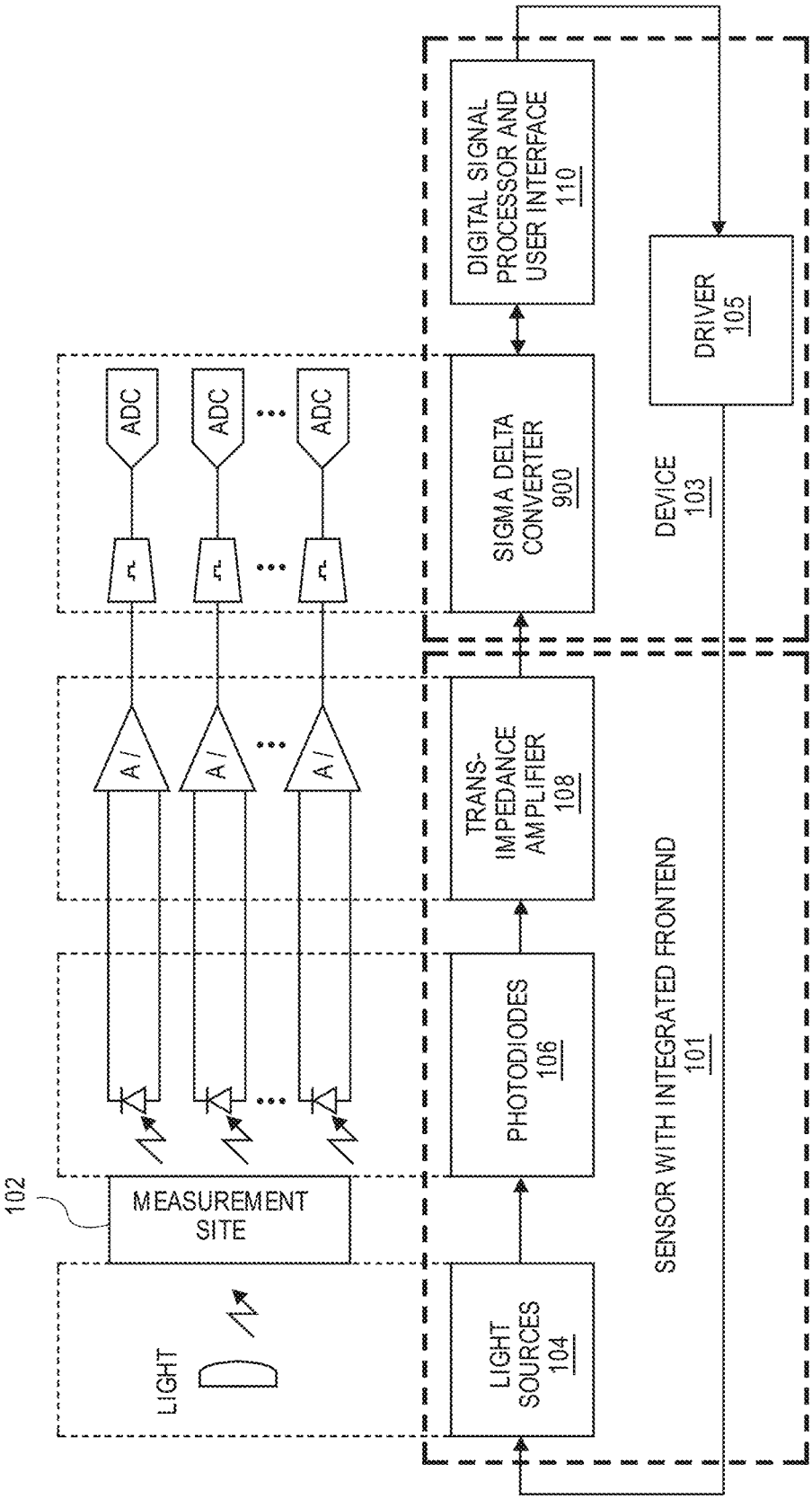

FIG. 15I

Masimo Ex. 1041
IPR Petition - US D962,936

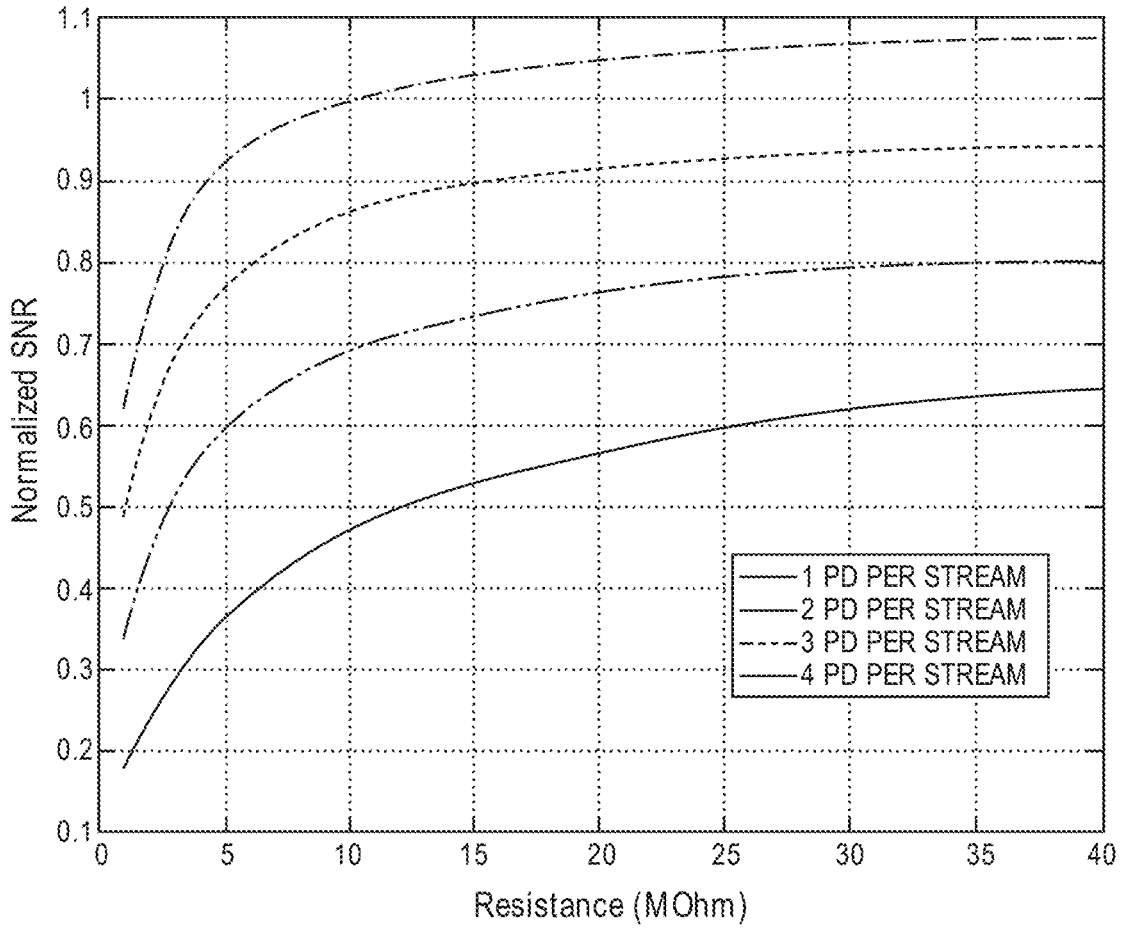
1.1
1
0.9
0.8
0.7
0.6
0.5
0.4
0.3
0.2
0.1
Normalized SNR
0
5
10
15
20
25
30
35
40
Resistance (MOhm)
1 PD PER STREAM
2 PD PER STREAM
3 PD PER STREAM
4 PD PER STREAM

FIG. 15J

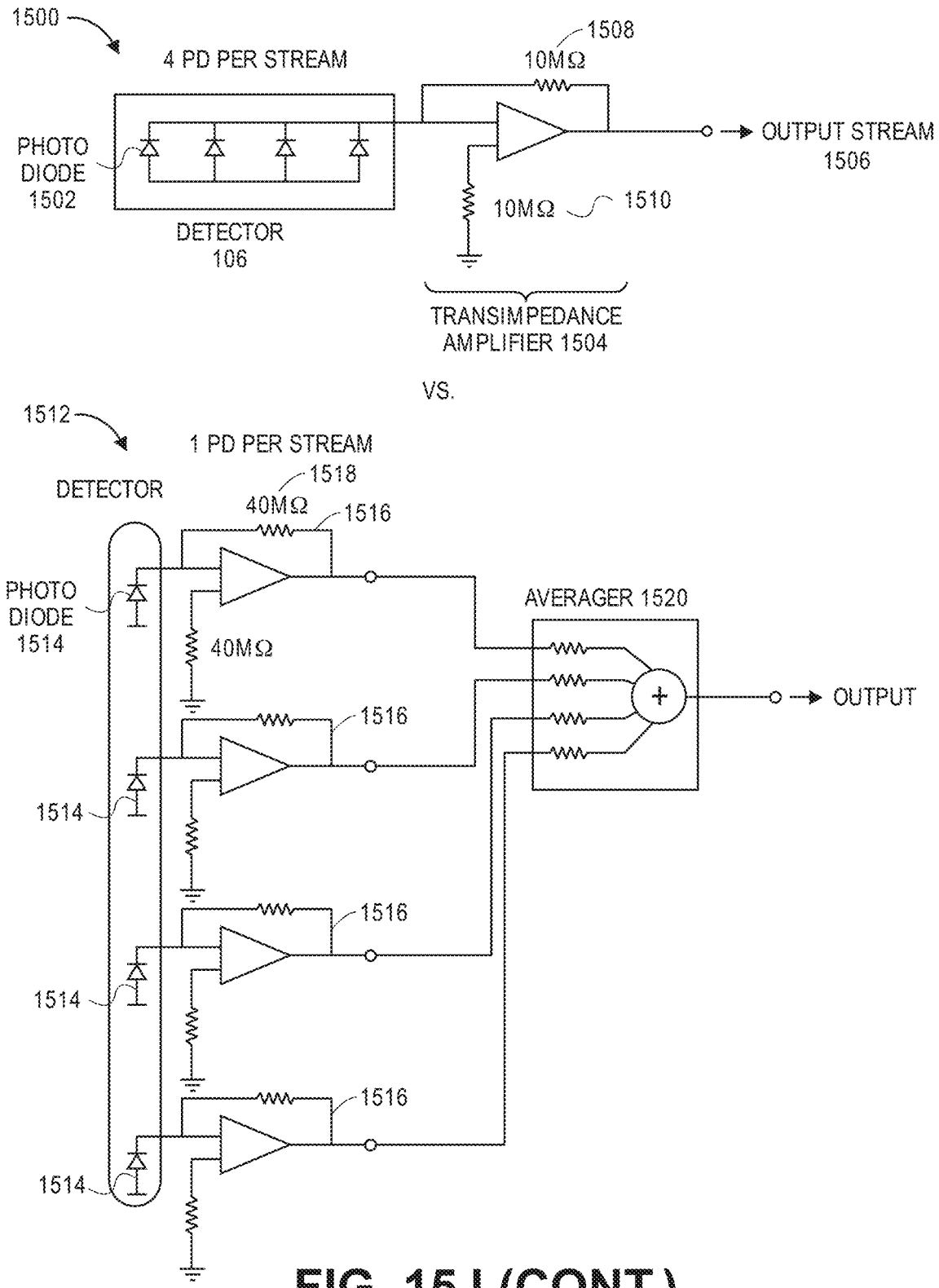

FIG. 15J (CONT.)

Masimo Ex. 1041
IPR Petition - US D962,936

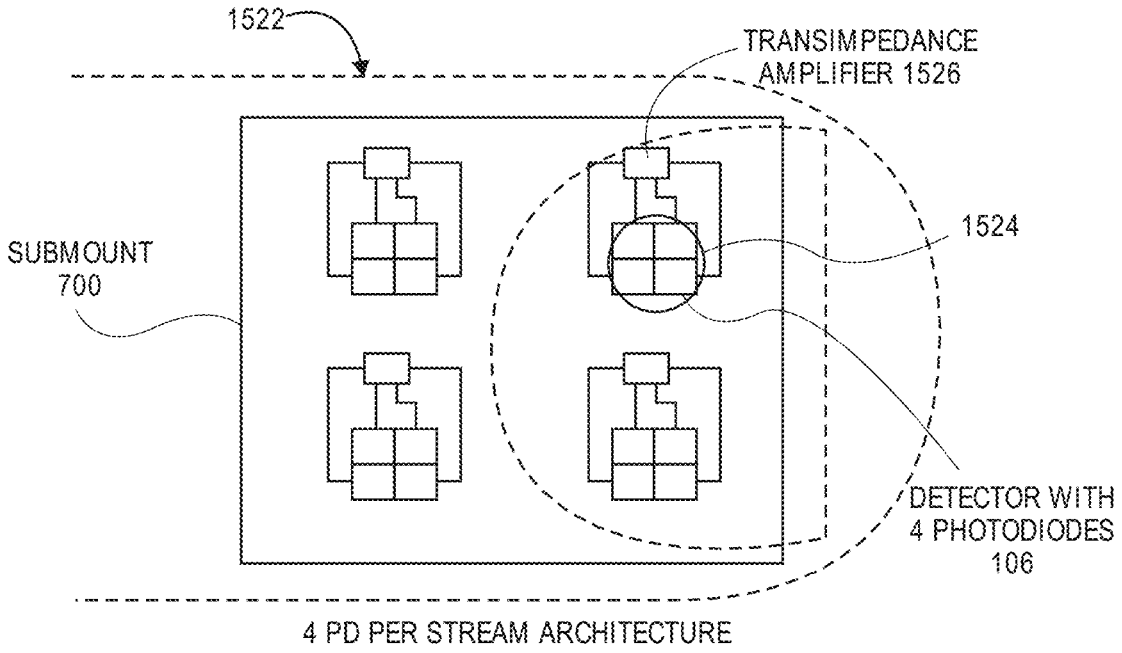

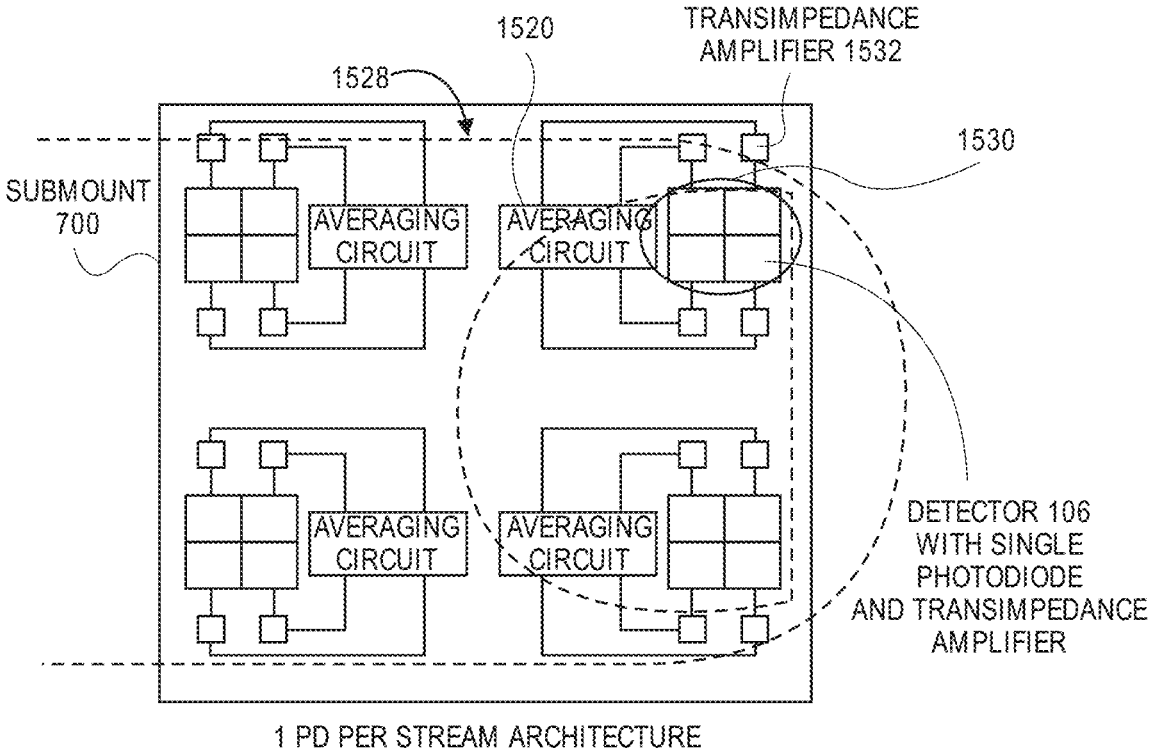

FIG. 15K

Masimo Ex. 1041
IPR Petition - US D962,936

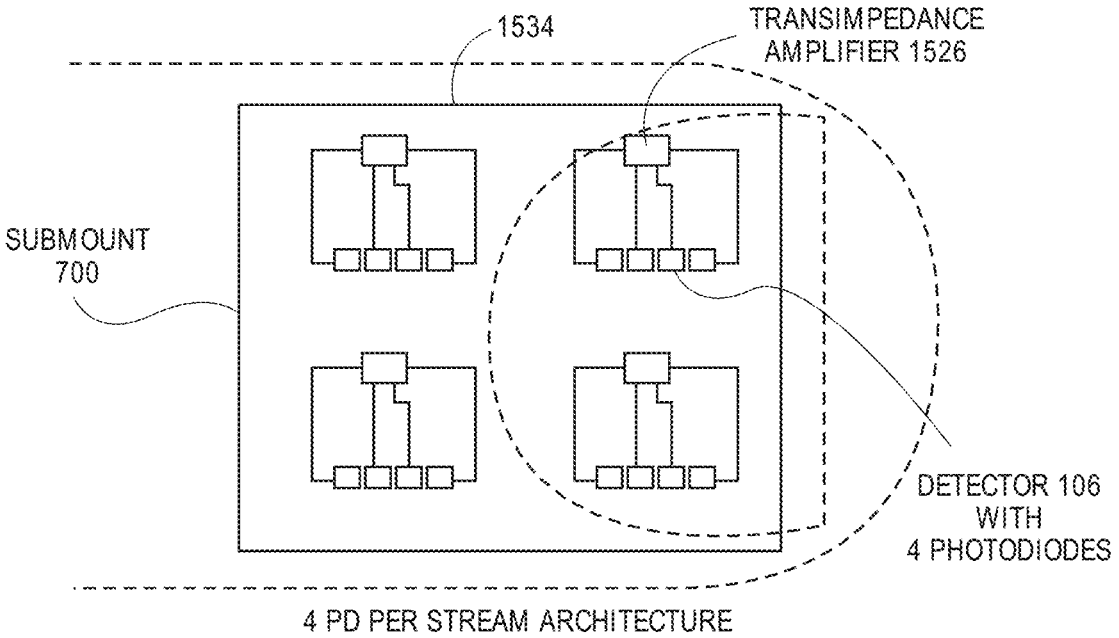

4 PD PER STREAM ARCHITECTURE

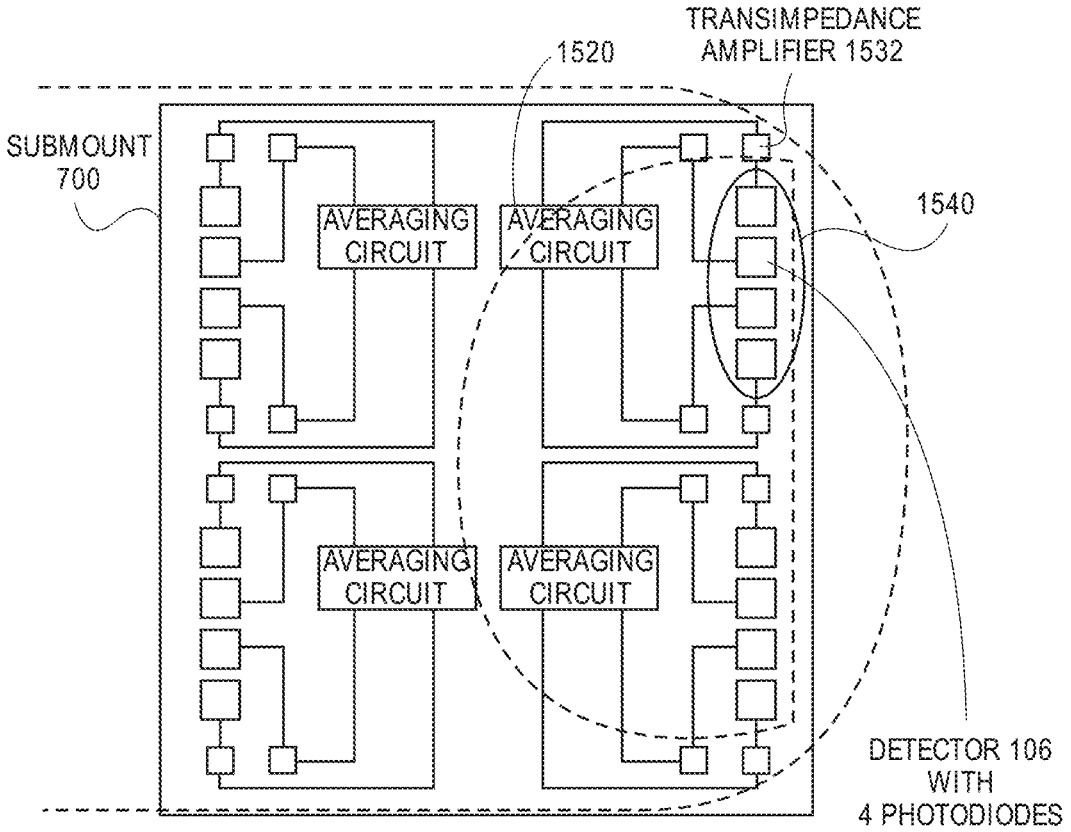

1 PD PER STREAM ARCHITECTURE

FIG. 15K (CONT.)

Masimo Ex. 1041
IPR Petition - US D962,936

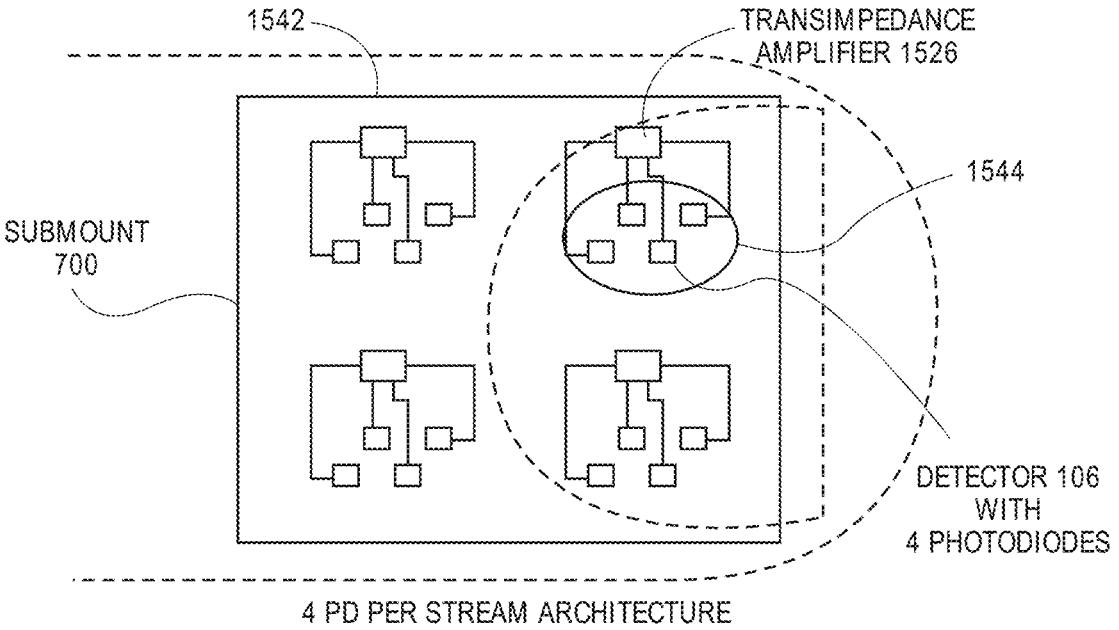

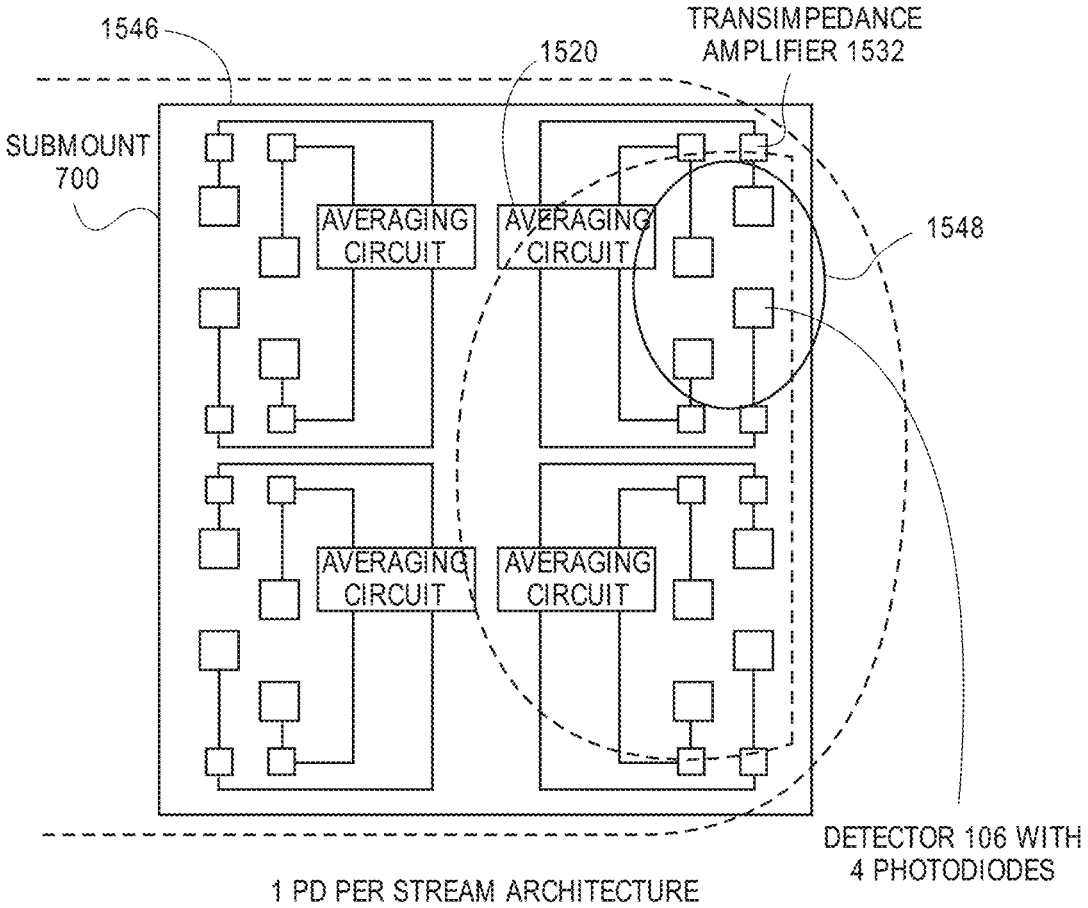

FIG. 15K (CONT.)

Masimo Ex. 1041
IPR Petition - US D962,936

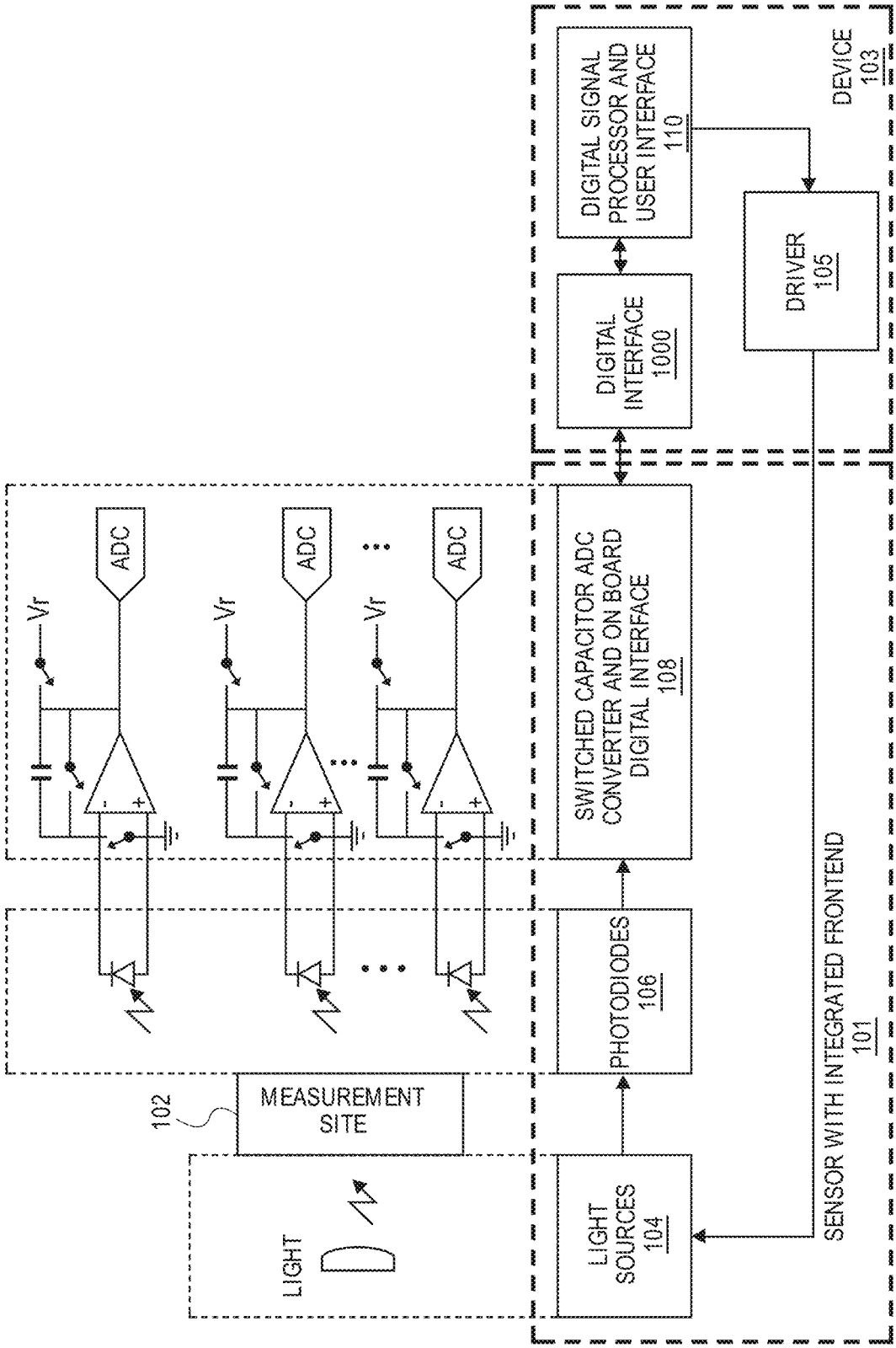

FIG. 15L

Masimo Ex. 1041
IPR Petition - US D962,936

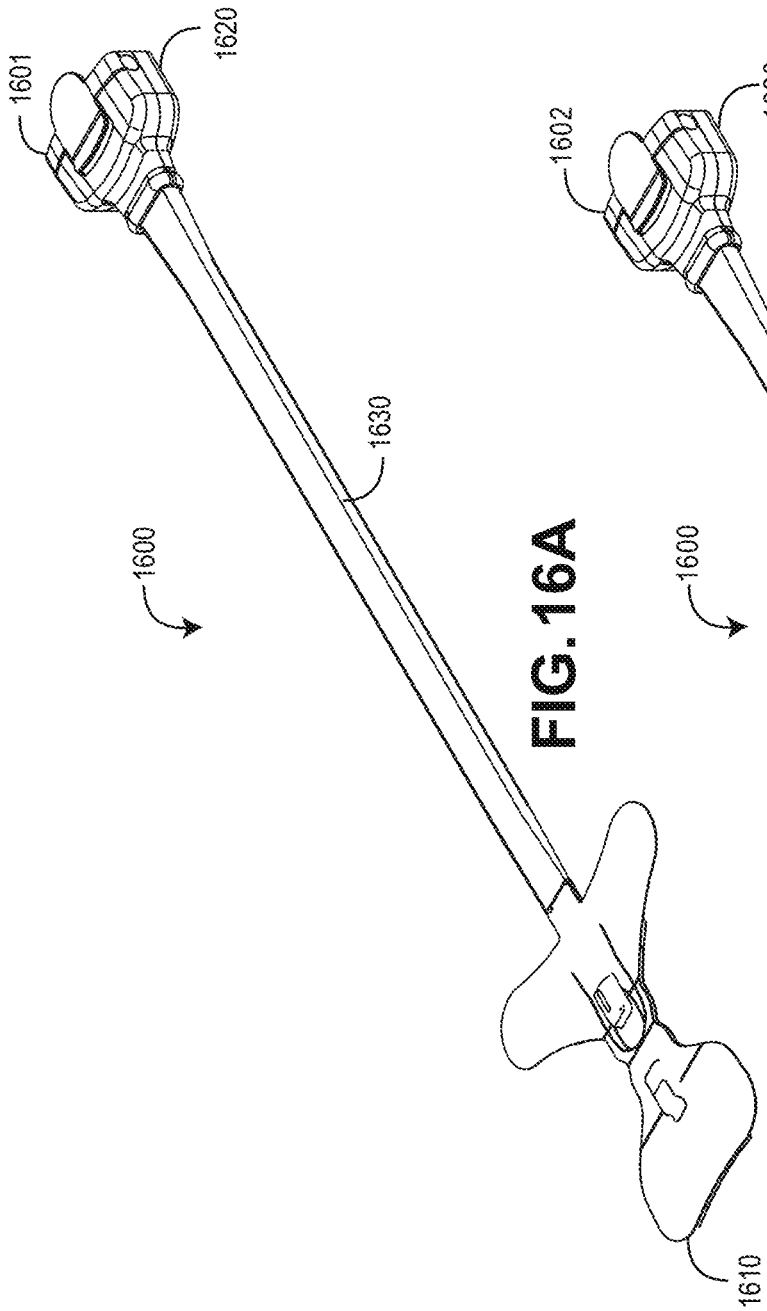

FIG. 16A

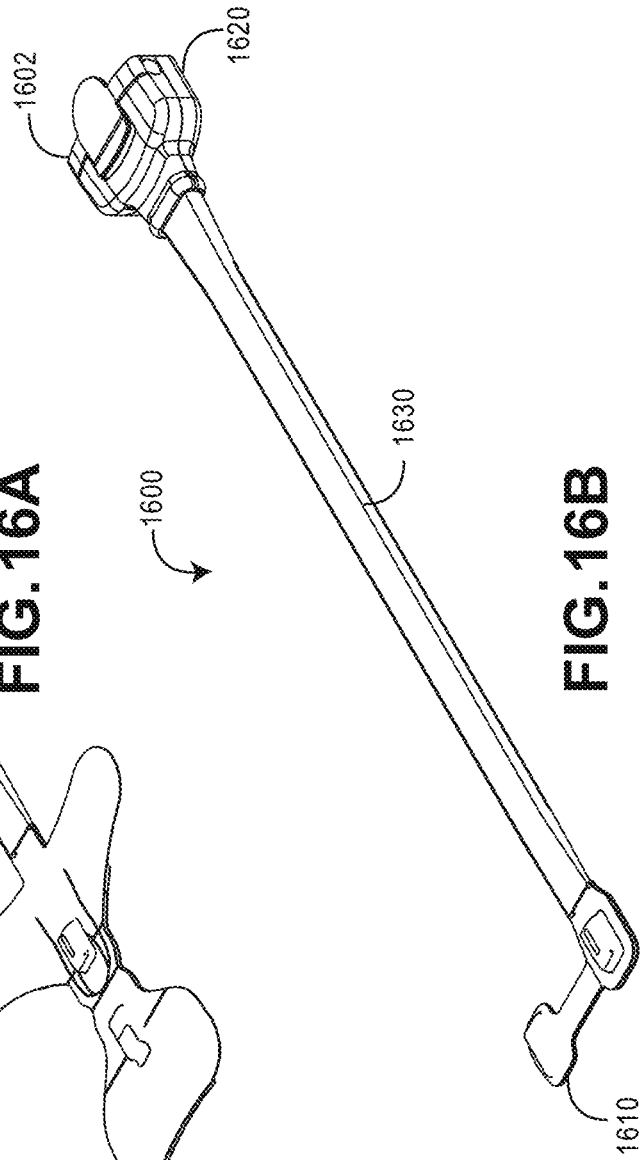

FIG. 16B

Masimo Ex. 1041
IPR Petition - US D962,936

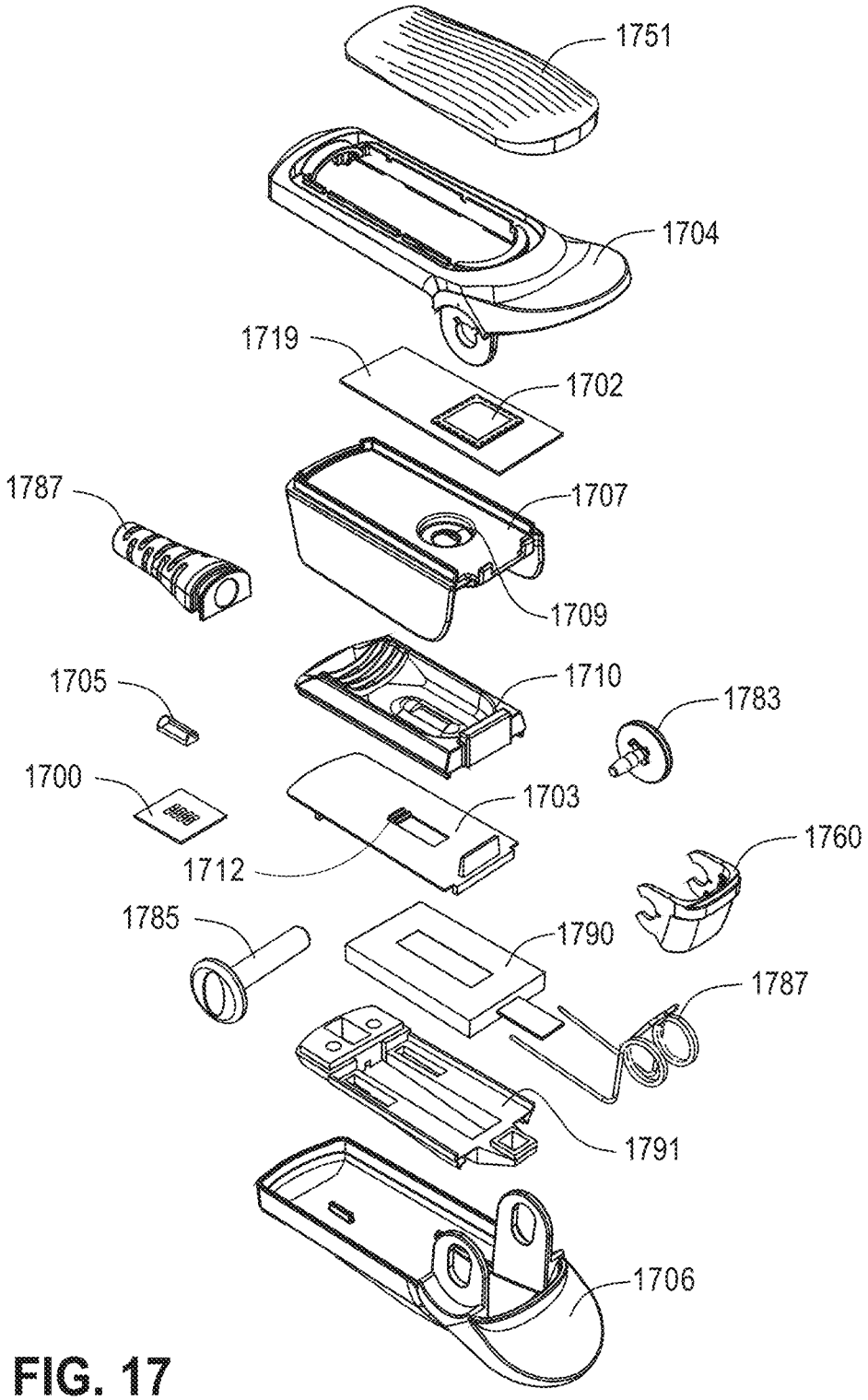
1751
1704
1719
1702
1787
1707
1709
1705
1710
1783
1700
1703
1760
1712
1785
1790
1787
1791
1706

FIG. 17

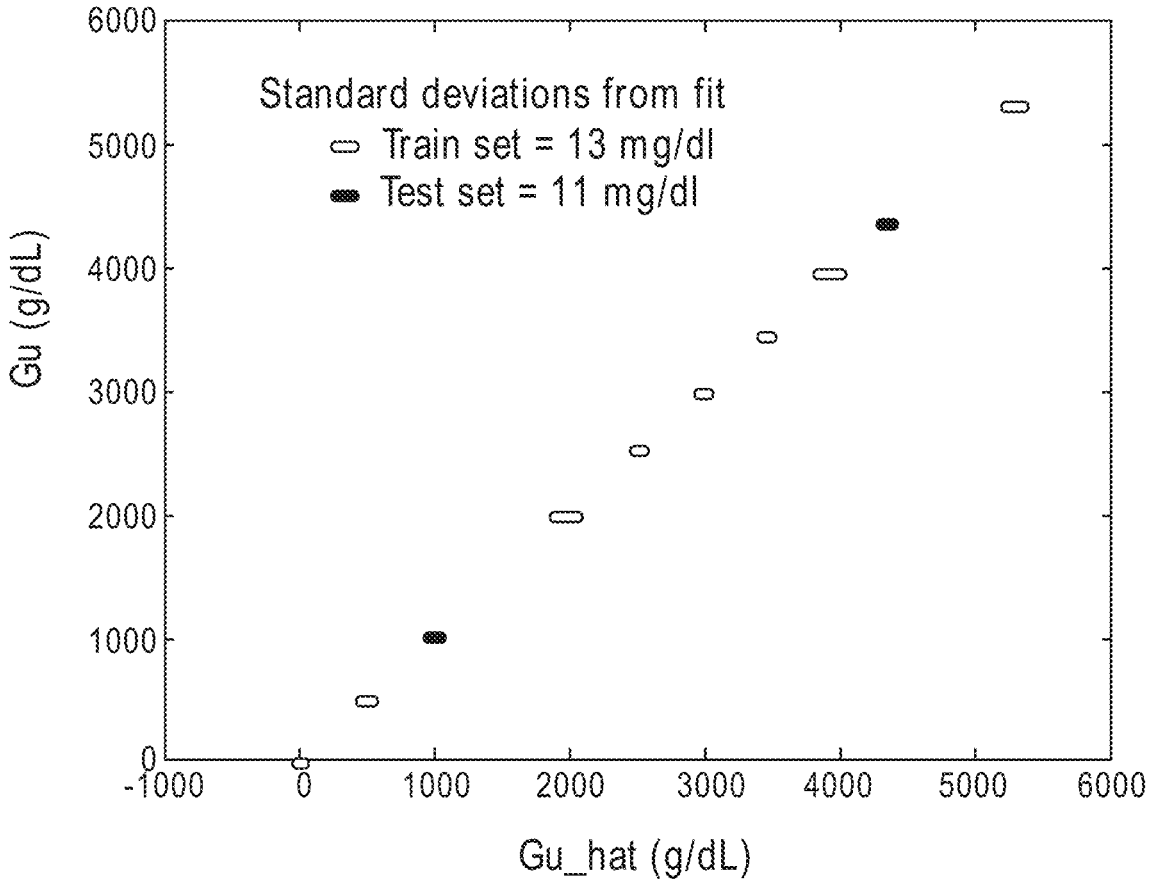

FIG. 18

Masimo Ex. 1041
IPR Petition - US D962,936

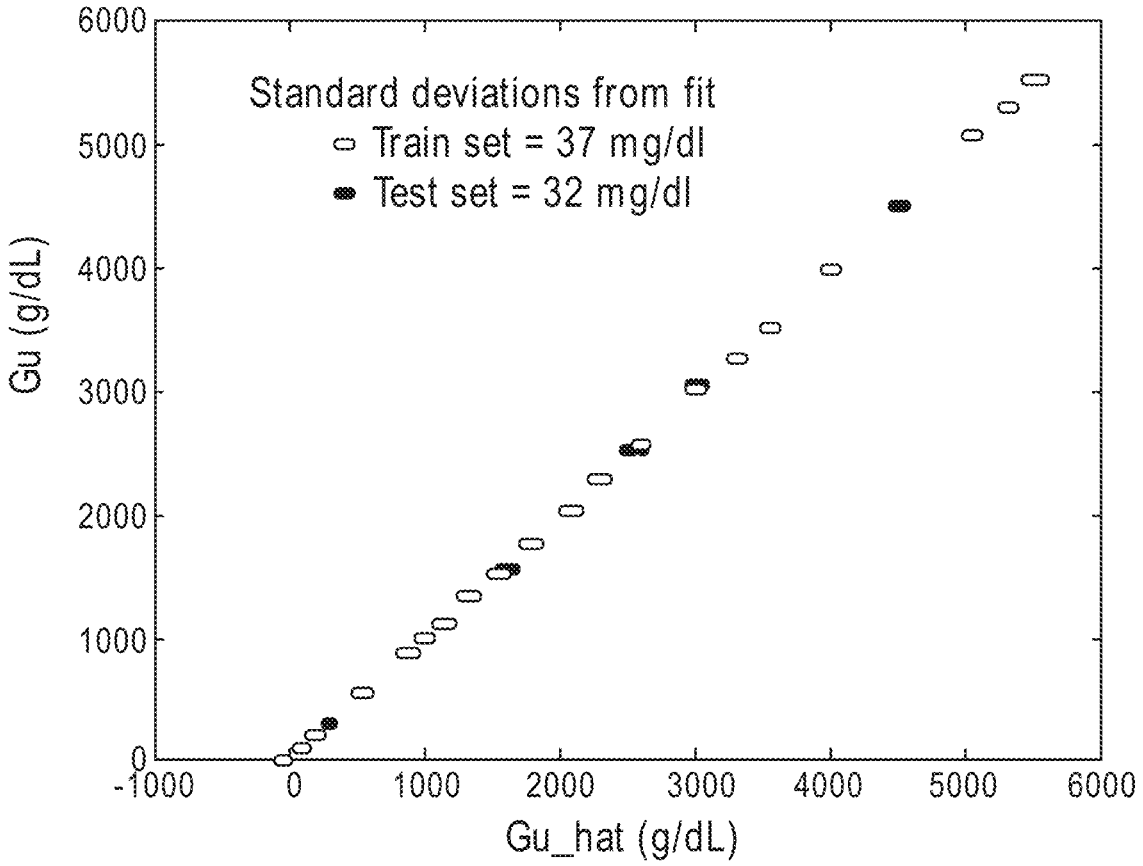

FIG. 19

Masimo Ex. 1041
IPR Petition - US D962,936

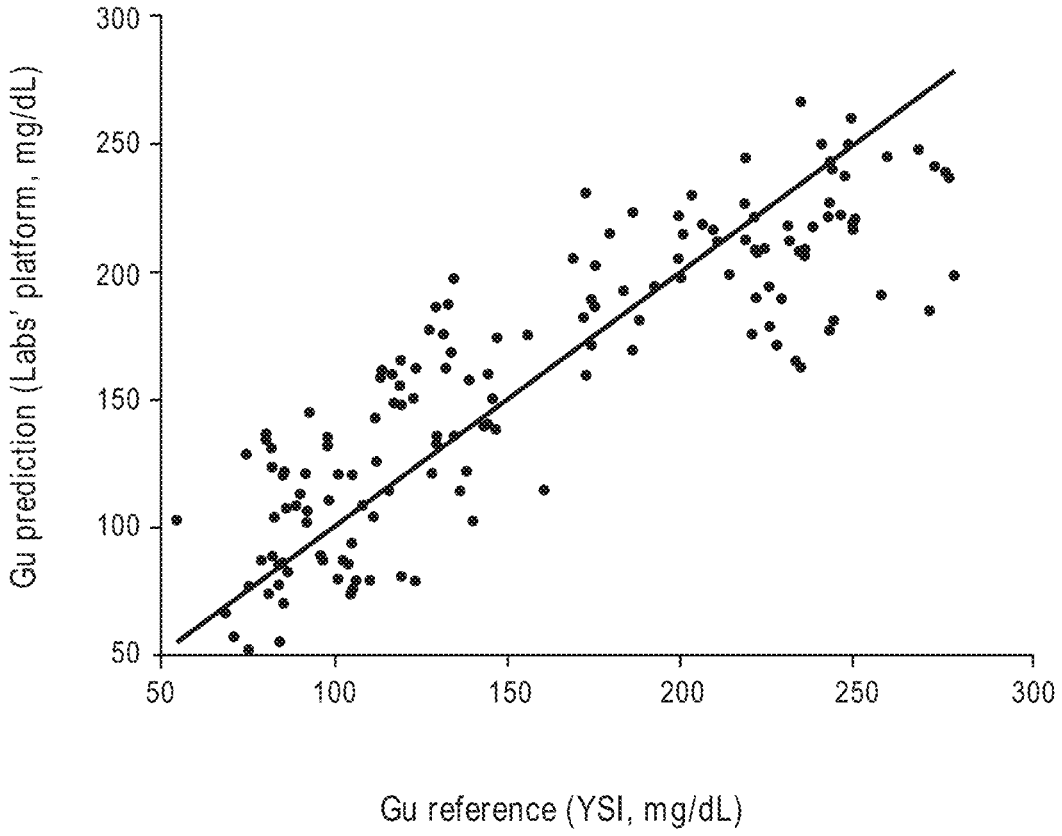

FIG. 20

Masimo Ex. 1041
IPR Petition - US D962,936

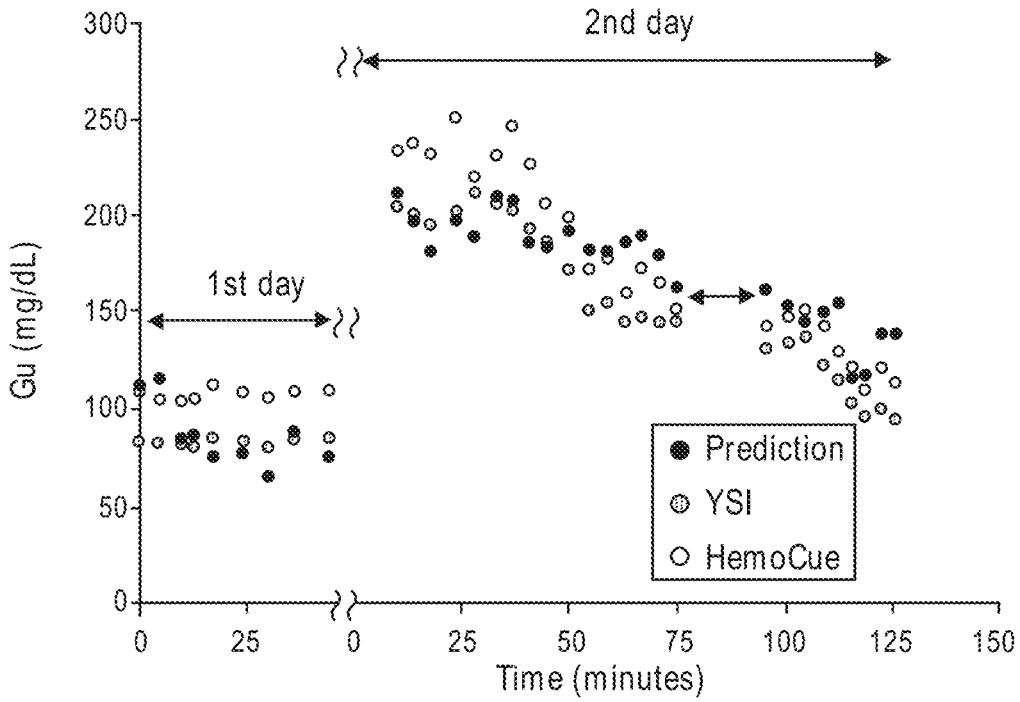

FIG. 21

Masimo Ex. 1041
IPR Petition - US D962,936

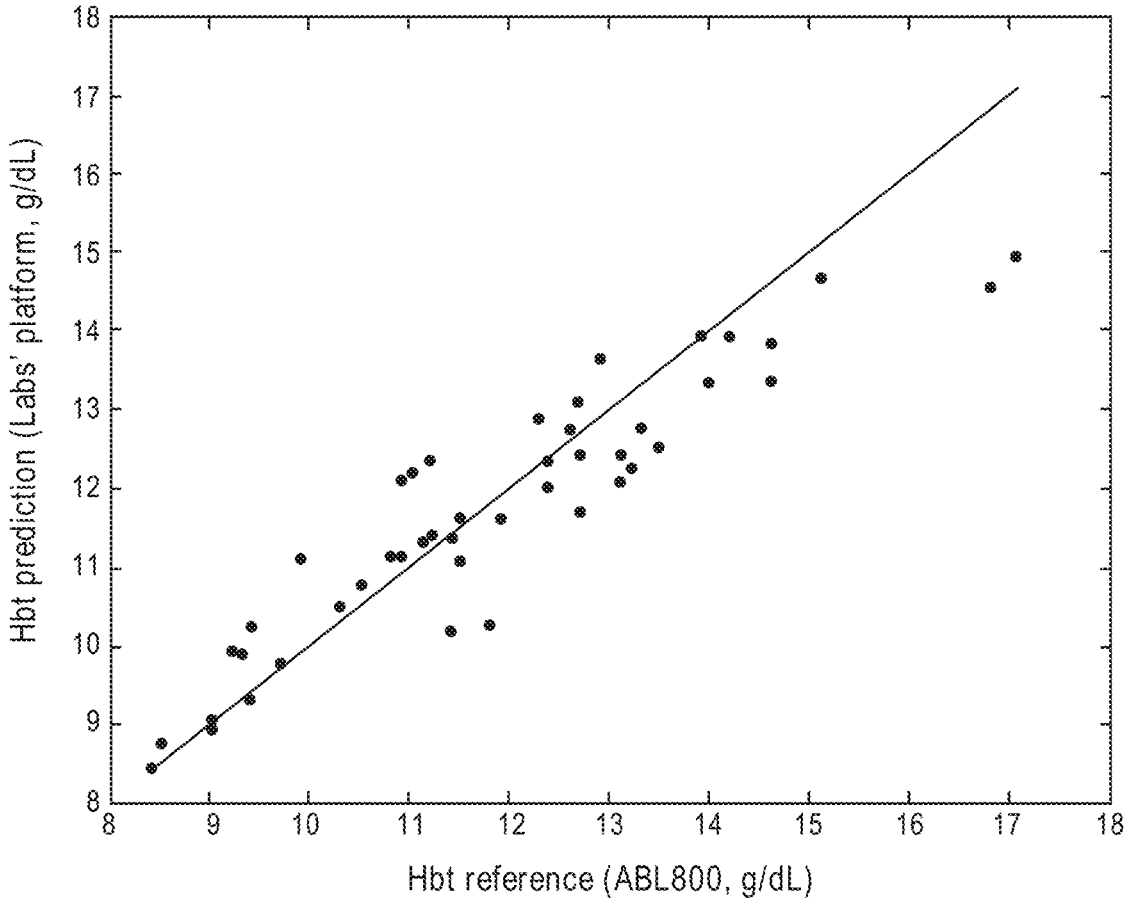

FIG. 22

Masimo Ex. 1041
IPR Petition - US D962,936

USER-WORN DEVICE FOR NONINVASIVELY MEASURING A PHYSIOLOGICAL PARAMETER OF A USER

RELATED APPLICATIONS

This application is a continuation of U.S. patent application Ser. No. 16/834,538, filed Mar. 30, 2020, which is a continuation of U.S. patent application Ser. No. 16/725,292, filed Dec. 23, 2019, which is a continuation of U.S. patent application Ser. No. 16/534,949, filed Aug. 7, 2019, which is a continuation of U.S. patent application Ser. No. 16/409,515, filed May 10, 2019, which is a continuation of U.S. patent application Ser. No. 16/261,326, filed Jan. 29, 2019, which is a continuation of U.S. patent application Ser. No. 16/212,537, filed Dec. 6, 2018, which is a continuation of U.S. patent application Ser. No. 14/981,290 filed Dec. 28, 2015, which is a continuation of U.S. patent application Ser. No. 12/829,352 filed Jul. 1, 2010, which is a continuation of U.S. patent application Ser. No. 12/534,827 filed Aug. 3, 2009, which claims the benefit of priority under 35 U.S.C. § 119(e) of the following U.S. Provisional Patent Application Nos. 61/086,060 filed Aug. 4, 2008, 61/086,108 filed Aug. 4, 2008, 61/086,063 filed Aug. 4, 2008, 61/086,057 filed Aug. 4, 2008, and 61/091,732 filed Aug. 25, 2008. U.S. patent application Ser. No. 12/829,352 is also a continuation-in-part of U.S. patent application Ser. No. 12/497,528 filed Jul. 2, 2009, which claims the benefit of priority under 35 U.S.C. § 119(e) of the following U.S. Provisional Patent Application Nos. 61/086,060 filed Aug. 4, 2008, 61/086,108 filed Aug. 4, 2008, 61/086,063 filed Aug. 4, 2008, 61/086,057 filed Aug. 4, 2008, 61/078,228 filed Jul. 3, 2008, 61/078,207 filed Jul. 3, 2008, and 61/091,732 filed Aug. 25, 2008. U.S. patent application Ser. No. 12/497,528 also claims the benefit of priority under 35 U.S.C. § 120 as a continuation-in-part of the following U.S. Design patent application Ser. No. 29/323,409 filed Aug. 25, 2008 and Ser. No. 29/323,408 filed Aug. 25, 2008. U.S. patent application Ser. No. 12/829,352 is also a continuation-in-part of U.S. patent application Ser. No. 12/497,523 filed Jul. 2, 2009, which claims the benefit of priority under 35 U.S.C. § 119(e) of the following U.S. Provisional Patent Application Nos. 61/086,060 filed Aug. 4, 2008, 61/086,108 filed Aug. 4, 2008, 61/086,063 filed Aug. 4, 2008, 61/086,057 filed Aug. 4, 2008, 61/078,228 filed Jul. 3, 2008, 61/078,207 filed Jul. 3, 2008, and 61/091,732 filed Aug. 25, 2008. U.S. patent application Ser. No. 12/497,523 also claims the benefit of priority under 35 U.S.C. § 120 as a continuation-in-part of the following U.S. Design patent application Ser. No. 29/323,409 filed Aug. 25, 2008 and Ser. No. 29/323,408 filed Aug. 25, 2008.

This application is related to the following U.S. patent applications:

App. No.	Filing Date	Title
12/497,528	Jul. 2, 2009	Noise Shielding for Noninvasive Device
12/497,523	Jul. 2, 2009	Contoured Protrusion for Improving Spectroscopic Measurement of Blood Constituents
12/497,506	Jul. 2, 2009	Heat Sink for Noninvasive Medical Sensor
12/534,812	Aug. 3, 2009	Multi-Stream Sensor Front Ends for Non-Invasive Measurement of Blood Constituents

-continued

App. No.	Filing Date	Title
12/534,823	Aug. 3, 2009	Multi-Stream Sensor for Non-Invasive Measurement of Blood Constituents
12/534,825	Aug. 3, 2009	Multi-Stream Emitter for Non-Invasive Measurement of Blood Constituents

The foregoing applications are hereby incorporated by reference in their entirety.

BACKGROUND

The standard of care in caregiver environments includes patient monitoring through spectroscopic analysis using, for example, a pulse oximeter. Devices capable of spectroscopic analysis generally include a light source(s) transmitting optical radiation into or reflecting off a measurement site, such as, body tissue carrying pulsing blood. After attenuation by tissue and fluids of the measurement site, a photodetection device(s) detects the attenuated light and outputs a detector signal(s) responsive to the detected attenuated light. A signal processing device(s) process the detector(s) signal (s) and outputs a measurement indicative of a blood constituent of interest, such as glucose, oxygen, met hemoglobin, total hemoglobin, other physiological parameters, or other data or combinations of data useful in determining a state or trend of wellness of a patient.

In noninvasive devices and methods, a sensor is often adapted to position a finger proximate the light source and light detector. For example, noninvasive sensors often include a clothespin-shaped housing that includes a contoured bed conforming generally to the shape of a finger.

SUMMARY

This disclosure describes embodiments of noninvasive methods, devices, and systems for measuring a blood constituent or analyte, such as oxygen, carbon monoxide, methemoglobin, total hemoglobin, glucose, proteins, glucose, lipids, a percentage thereof (e.g., saturation) or for measuring many other physiologically relevant patient characteristics. These characteristics can relate, for example, to pulse rate, hydration, trending information and analysis, and the like.

In an embodiment, the system includes a noninvasive sensor and a patient monitor communicating with the non-invasive sensor. The non-invasive sensor may include different architectures to implement some or all of the disclosed features. In addition, an artisan will recognize that the non-invasive sensor may include or may be coupled to other components, such as a network interface, and the like. Moreover, the patient monitor may include a display device, a network interface communicating with any one or combination of a computer network, a handheld computing device, a mobile phone, the Internet, or the like. In addition, embodiments may include multiple optical sources that emit light at a plurality of wavelengths and that are arranged from the perspective of the light detector(s) as a point source.

In an embodiment, a noninvasive device is capable of producing a signal responsive to light attenuated by tissue at a measurement site. The device may comprise an optical source and a plurality of photodetectors. The optical source is configured to emit optical radiation at least at wavelengths between about 1600 nm and about 1700 nm. The photodetectors are configured to detect the optical radiation from

said optical source after attenuation by the tissue of the measurement site and each output a respective signal stream responsive to the detected optical radiation.

In an embodiment, a noninvasive, physiological sensor is capable of outputting a signal responsive to a blood analyte present in a monitored patient. The sensor may comprise a sensor housing, an optical source, and photodetectors. The optical source is positioned by the housing with respect to a tissue site of a patient when said housing is applied to the patient. The photodetectors are positioned by the housing with respect to said tissue site when the housing is applied to the patient with a variation in path length among at least some of the photodetectors from the optical source. The photodetectors are configured to detect a sequence of optical radiation from the optical source after attenuation by tissue of the tissue site. The photodetectors may be each configured to output a respective signal stream responsive to the detected sequence of optical radiation. An output signal responsive to one or more of the signal streams is then usable to determine the blood analyte based at least in part on the variation in path length.

In an embodiment, a method of measuring an analyte based on multiple streams of optical radiation measured from a measurement site is provided. A sequence of optical radiation pulses is emitted to the measurement site. At a first location, a first stream of optical radiation is detected from the measurement site. At least at one additional location different from the first location, an additional stream of optical radiation is detected from the measurement site. An output measurement value indicative of the analyte is then determined based on the detected streams of optical radiation.

In various embodiments, the present disclosure relates to an interface for a noninvasive sensor that comprises a front-end adapted to receive an input signals from optical detectors and provide corresponding output signals. In an embodiment, the front-end is comprised of switched-capacitor circuits that are capable of handling multiple streams of signals from the optical detectors. In another embodiment, the front-end comprises transimpedance amplifiers that are capable of handling multiple streams of input signals. In addition, the transimpedance amplifiers may be configured based on the characteristics of the transimpedance amplifier itself, the characteristics of the photodiodes, and the number of photodiodes coupled to the transimpedance amplifier.

In disclosed embodiments, the front-ends are employed in noninvasive sensors to assist in measuring and detecting various analytes. The disclosed noninvasive sensor may also include, among other things, emitters and detectors positioned to produce multi-stream sensor information. An artisan will recognize that the noninvasive sensor may have different architectures and may include or be coupled to other components, such as a display device, a network interface, and the like. An artisan will also recognize that the front-ends may be employed in any type of noninvasive sensor.

In an embodiment, a front-end interface for a noninvasive, physiological sensor comprises: a set of inputs configured to receive signals from a plurality of detectors in the sensor; a set of transimpedance amplifiers configured to convert the signals from the plurality of detectors into an output signal having a stream for each of the plurality of detectors; and an output configured to provide the output signal.

In an embodiment, a front-end interface for a noninvasive, physiological sensor comprises: a set of inputs configured to receive signals from a plurality of detectors in the sensor; a set of switched capacitor circuits configured to convert the signals from the plurality of detectors into a digital output signal having a stream for each of the plurality of detectors; and an output configured to provide the digital output signal.

In an embodiment, a conversion processor for a physiological, noninvasive sensor comprises: a multi-stream input configured to receive signals from a plurality of detectors in the sensor, wherein the signals are responsive to optical radiation from a tissue site; a modulator that converts the multi-stream input into a digital bit-stream; and a signal processor that produces an output signal from the digital bit-stream.

In an embodiment, a front-end interface for a noninvasive, physiological sensor comprises: a set of inputs configured to receive signals from a plurality of detectors in the sensor; a set of respective transimpedance amplifiers for each detector configured to convert the signals from the plurality of detectors into an output signal having a stream for each of the plurality of detectors; and an output configured to provide the output signal.

In certain embodiments, a noninvasive sensor interfaces with tissue at a measurement site and deforms the tissue in a way that increases signal gain in certain desired wavelengths.

In some embodiments, a detector for the sensor may comprise a set of photodiodes that are arranged in a spatial configuration. This spatial configuration may allow, for example, signal analysis for measuring analytes like glucose. In various embodiments, the detectors can be arranged across multiple locations in a spatial configuration. The spatial configuration provides a geometry having a diversity of path lengths among the detectors. For example, the detector in the sensor may comprise multiple detectors that are arranged to have a sufficient difference in mean path length to allow for noise cancellation and noise reduction.

In an embodiment, a physiological, noninvasive detector is configured to detect optical radiation from a tissue site. The detector comprises a set of photodetectors and a conversion processor. The set of photodetectors each provide a signal stream indicating optical radiation from the tissue site. The set of photodetectors are arranged in a spatial configuration that provides a variation in path lengths between at least some of the photodetectors. The conversion processor that provides information indicating an analyte in the tissue site based on ratios of pairs of the signal streams.

The present disclosure, according to various embodiments, relates to noninvasive methods, devices, and systems for measuring a blood analyte, such as glucose. In the present disclosure, blood analytes are measured noninvasively based on multi-stream infrared and near-infrared spectroscopy. In some embodiments, an emitter may include one or more sources that are configured as a point optical source. In addition, the emitter may be operated in a manner that allows for the measurement of an analyte like glucose. In embodiments, the emitter may comprise a plurality of LEDs that emit a sequence of pulses of optical radiation across a spectrum of wavelengths. In addition, in order to achieve the desired SNR for detecting analytes like glucose, the emitter may be driven using a progression from low power to higher power. The emitter may also have its duty cycle modified to achieve a desired SNR.

In an embodiment, a multi-stream emitter for a noninvasive, physiological device configured to transmit optical radiation in a tissue site comprises: a set of optical sources arranged as a point optical source; and a driver configured to drive the at least one light emitting diode and at least one optical source to transmit near-infrared optical radiation at

sufficient power to measure an analyte in tissue that responds to near-infrared optical radiation.

In an embodiment, an emitter for a noninvasive, physiological device configured to transmit optical radiation in a tissue site comprises: a point optical source comprising an optical source configured to transmit infrared and near-infrared optical radiation to a tissue site; and a driver configured to drive the point optical source at a sufficient power and noise tolerance to effectively provide attenuated optical radiation from a tissue site that indicates an amount of glucose in the tissue site.

In an embodiment, a method of transmitting a stream of pulses of optical radiation in a tissue site is provided. At least one pulse of infrared optical radiation having a first pulse width is transmitted at a first power. At least one pulse of near-infrared optical radiation is transmitted at a power that is higher than the first power.

In an embodiment, a method of transmitting a stream of pulses of optical radiation in a tissue site is provided. At least one pulse of infrared optical radiation having a first pulse width is transmitted at a first power. At least one pulse of near-infrared optical radiation is then transmitted, at a second power that is higher than the first power.

For purposes of summarizing the disclosure, certain aspects, advantages and novel features of the inventions have been described herein. It is to be understood that not necessarily all such advantages can be achieved in accordance with any particular embodiment of the inventions disclosed herein. Thus, the inventions disclosed herein can be embodied or carried out in a manner that achieves or optimizes one advantage or group of advantages as taught herein without necessarily achieving other advantages as can be taught or suggested herein.

BRIEF DESCRIPTION OF THE DRAWINGS

Throughout the drawings, reference numbers can be reused to indicate correspondence between referenced elements. The drawings are provided to illustrate embodiments of the inventions described herein and not to limit the scope thereof.

FIG. **1** illustrates a block diagram of an example data collection system capable of noninvasively measuring one or more blood analytes in a monitored patient, according to an embodiment of the disclosure;

FIGS. **2**A-**2**D illustrate an exemplary handheld monitor and an exemplary noninvasive optical sensor of the patient monitoring system of FIG. **1**, according to embodiments of the disclosure;

FIGS. **3**A-**3**C illustrate side and perspective views of an exemplary noninvasive sensor housing including a finger bed protrusion and heat sink, according to an embodiment of the disclosure;

FIG. **3**D illustrates a side view of another example noninvasive sensor housing including a heat sink, according to an embodiment of the disclosure;

FIG. **3**E illustrates a perspective view of an example noninvasive sensor detector shell including example detectors, according to an embodiment of the disclosure;

FIG. **3**F illustrates a side view of an example noninvasive sensor housing including a finger bed protrusion and heat sink, according to an embodiment of the disclosure;

FIGS. **4**A through **4**C illustrate top elevation, side and top perspective views of an example protrusion, according to an embodiment of the disclosure;

FIG. **5** illustrates an example graph depicting possible effects of a protrusion on light transmittance, according to an embodiment of the disclosure;

FIGS. **6**A through **6**D illustrate perspective, front elevation, side and top views of another example protrusion, according to an embodiment of the disclosure;

FIG. **6**E illustrates an example sensor incorporating the protrusion of FIGS. **6**A through **6**D, according to an embodiment of the disclosure;

FIGS. **7**A through **7**B illustrate example arrangements of conductive glass that may be employed in the system of FIG. **1**, according to embodiments of the disclosure;

FIGS. **8**A through **8**D illustrate an example top elevation view, side views, and a bottom elevation view of the conductive glass that may be employed in the system of FIG. **1**, according to embodiments of the disclosure;

FIG. **9** shows example comparative results obtained by an embodiment of a sensor;

FIGS. **10**A and **10**B illustrate comparative noise floors of various embodiments of the present disclosure;

FIG. **11**A illustrates an exemplary emitter that may be employed in the sensor, according to an embodiment of the disclosure;

FIG. **11**B illustrates a configuration of emitting optical radiation into a measurement site for measuring blood constituents, according to an embodiment of the disclosure;

FIG. **11**C illustrates another exemplary emitter that may be employed in the sensor according to an embodiment of the disclosure;

FIG. **11**D illustrates another exemplary emitter that may be employed in the sensor according to an embodiment of the disclosure;

FIG. **12**A illustrates an example detector portion that may be employed in an embodiment of a sensor, according to an embodiment of the disclosure;

FIGS. **12**B through **12**D illustrate exemplary arrangements of detectors that may be employed in an embodiment of the sensor, according to some embodiments of the disclosure;

FIGS. **12**E through **12**H illustrate exemplary structures of photodiodes that may be employed in embodiments of the detectors, according to some embodiments of the disclosure;

FIG. **13** illustrates an example multi-stream operation of the system of FIG. **1**, according to an embodiment of the disclosure;

FIG. **14**A illustrates another example detector portion having a partially cylindrical protrusion that can be employed in an embodiment of a sensor, according to an embodiment of the disclosure;

FIG. **14**B depicts a front elevation view of the partially cylindrical protrusion of FIG. **14**A;

FIGS. **14**C through **14**E illustrate embodiments of a detector submount;

FIGS. **14**F through **14**H illustrate embodiment of portions of a detector shell;

FIG. **14**I illustrates a cutaway view of an embodiment of a sensor;

FIGS. **15**A through **15**F illustrate embodiments of sensors that include heat sink features;

FIGS. **15**G and **15**H illustrate embodiments of connector features that can be used with any of the sensors described herein;

FIG. **15**I illustrates an exemplary architecture for a transimpedance-based front-end that may be employed in any of the sensors described herein;

FIG. **15**J illustrates an exemplary noise model for configuring the transimpedance-based front-ends shown in FIG. **15**I;

FIG. **15**K shows different architectures and layouts for various embodiments of a sensor and its detectors;

FIG. **15**L illustrates an exemplary architecture for a switched-capacitor-based front-end that may be employed in any of the sensors described herein;

FIGS. **16**A and **16**B illustrate embodiments of disposable optical sensors;

FIG. **17** illustrates an exploded view of certain components of an example sensor; and

FIGS. **18** through **22** illustrate various results obtained by an exemplary sensor of the disclosure.

DETAILED DESCRIPTION

The present disclosure generally relates to non-invasive medical devices. In the present disclosure, a sensor can measure various blood constituents or analytes noninvasively using multi-stream spectroscopy. In an embodiment, the multi-stream spectroscopy can employ visible, infrared and near infrared wavelengths. As disclosed herein, the sensor is capable of noninvasively measuring blood analytes or percentages thereof (e.g., saturation) based on various combinations of features and components.

In various embodiments, the present disclosure relates to an interface for a noninvasive glucose sensor that comprises a front-end adapted to receive an input signals from optical detectors and provide corresponding output signals. The front-end may comprise, among other things, switched capacitor circuits or transimpedance amplifiers. In an embodiment, the front-end may comprise switched capacitor circuits that are configured to convert the output of sensor's detectors into a digital signal. In another embodiment, the front-end may comprise transimpedance amplifiers. These transimpedance amplifiers may be configured to match one or more photodiodes in a detector based on a noise model that accounts for characteristics, such as the impedance, of the transimpedance amplifier, characteristics of each photodiode, such as the impedance, and the number of photodiodes coupled to the transimpedance amplifier.

In the present disclosure, the front-ends are employed in a sensor that measures various blood analytes noninvasively using multi-stream spectroscopy. In an embodiment, the multi-stream spectroscopy can employ visible, infrared and near infrared wavelengths. As disclosed herein, the sensor is capable of noninvasively measuring blood analytes, such as glucose, total hemoglobin, methemoglobin, oxygen content, and the like, based on various combinations of features and components.

In an embodiment, a physiological sensor includes a detector housing that can be coupled to a measurement site, such as a patient's finger. The sensor housing can include a curved bed that can generally conform to the shape of the measurement site. In addition, the curved bed can include a protrusion shaped to increase an amount of light radiation from the measurement site. In an embodiment, the protrusion is used to thin out the measurement site. This allows the light radiation to pass through less tissue, and accordingly is attenuated less. In an embodiment, the protrusion can be used to increase the area from which attenuated light can be measured. In an embodiment, this is done through the use of a lens which collects attenuated light exiting the measurement site and focuses onto one or more detectors. The protrusion can advantageously include plastic, including a hard opaque plastic, such as a black or other colored plastic, helpful in reducing light noise. In an embodiment, such light noise includes light that would otherwise be detected at a photodetector that has not been attenuated by tissue of the measurement site of a patient sufficient to cause the light to adequately included information indicative of one or more physiological parameters of the patient. Such light noise includes light piping.

In an embodiment, the protrusion can be formed from the curved bed, or can be a separate component that is positionable with respect to the bed. In an embodiment, a lens made from any appropriate material is used as the protrusion. The protrusion can be convex in shape. The protrusion can also be sized and shaped to conform the measurement site into a flat or relatively flat surface. The protrusion can also be sized to conform the measurement site into a rounded surface, such as, for example, a concave or convex surface. The protrusion can include a cylindrical or partially cylindrical shape. The protrusion can be sized or shaped differently for different types of patients, such as an adult, child, or infant. The protrusion can also be sized or shaped differently for different measurement sites, including, for example, a finger, toe, hand, foot, ear, forehead, or the like. The protrusion can thus be helpful in any type of noninvasive sensor. The external surface of the protrusion can include one or more openings or windows. The openings can be made from glass to allow attenuated light from a measurement site, such as a finger, to pass through to one or more detectors. Alternatively, some of all of the protrusion can be a lens, such as a partially cylindrical lens.

The sensor can also include a shielding, such as a metal enclosure as described below or embedded within the protrusion to reduce noise. The shielding can be constructed from a conductive material, such as copper, in the form of a metal cage or enclosure, such as a box. The shielding can include a second set of one or more openings or windows. The second set of openings can be made from glass and allow light that has passed through the first set of windows of the external surface of the protrusion to pass through to one or more detectors that can be enclosed, for example, as described below.

In various embodiments, the shielding can include any substantially transparent, conductive material placed in the optical path between an emitter and a detector. The shielding can be constructed from a transparent material, such as glass, plastic, and the like. The shielding can have an electrically conductive material or coating that is at least partially transparent. The electrically conductive coating can be located on one or both sides of the shielding, or within the body of the shielding. In addition, the electrically conductive coating can be uniformly spread over the shielding or may be patterned. Furthermore, the coating can have a uniform or varying thickness to increase or optimize its shielding effect. The shielding can be helpful in virtually any type of noninvasive sensor that employs spectroscopy.

In an embodiment, the sensor can also include a heat sink. In an embodiment, the heat sink can include a shape that is functional in its ability to dissipate excess heat and aesthetically pleasing to the wearer. For example, the heat sink can be configured in a shape that maximizes surface area to allow for greater dissipation of heat. In an embodiment, the heat sink includes a metalicized plastic, such as plastic including carbon and aluminum to allow for improved thermal conductivity and diffusivity. In an embodiment, the heat sink can advantageously be inexpensively molded into desired shapes and configurations for aesthetic and functional purposes. For example, the shape of the heat sink can

Masimo Ex. 1041
IPR Petition - US D962,936

be a generally curved surface and include one or more fins, undulations, grooves or channels, or combs.

The sensor can include photocommunicative components, such as an emitter, a detector, and other components. The emitter can include a plurality of sets of optical sources that, in an embodiment, are arranged together as a point source. The various optical sources can emit a sequence of optical radiation pulses at different wavelengths towards a measurement site, such as a patient's finger. Detectors can then detect optical radiation from the measurement site. The optical sources and optical radiation detectors can operate at any appropriate wavelength, including, as discussed herein, infrared, near infrared, visible light, and ultraviolet. In addition, the optical sources and optical radiation detectors can operate at any appropriate wavelength, and such modifications to the embodiments desirable to operate at any such wavelength will be apparent to those skilled in the art.

In certain embodiments, multiple detectors are employed and arranged in a spatial geometry. This spatial geometry provides a diversity of path lengths among at least some of the detectors and allows for multiple bulk and pulsatile measurements that are robust. Each of the detectors can provide a respective output stream based on the detected optical radiation, or a sum of output streams can be provided from multiple detectors. In some embodiments, the sensor can also include other components, such as one or more heat sinks and one or more thermistors.

The spatial configuration of the detectors provides a geometry having a diversity of path lengths among the detectors. For example, a detector in the sensor may comprise multiple detectors that are arranged to have a sufficient difference in mean path length to allow for noise cancellation and noise reduction. In addition, walls may be used to separate individual photodetectors and prevent mixing of detected optical radiation between the different locations on the measurement site. A window may also be employed to facilitate the passing of optical radiation at various wavelengths for measuring glucose in the tissue.

In the present disclosure, a sensor may measure various blood constituents or analytes noninvasively using spectroscopy and a recipe of various features. As disclosed herein, the sensor is capable of non-invasively measuring blood analytes, such as, glucose, total hemoglobin, methemoglobin, oxygen content, and the like. In an embodiment, the spectroscopy used in the sensor can employ visible, infrared and near infrared wavelengths. The sensor may comprise an emitter, a detector, and other components. In some embodiments, the sensor may also comprise other components, such as one or more heat sinks and one or more thermistors.

In various embodiments, the sensor may also be coupled to one or more companion devices that process and/or display the sensor's output. The companion devices may comprise various components, such as a sensor front-end, a signal processor, a display, a network interface, a storage device or memory, etc.

A sensor can include photocommunicative components, such as an emitter, a detector, and other components. The emitter is configured as a point optical source that comprises a plurality of LEDs that emit a sequence of pulses of optical radiation across a spectrum of wavelengths. In some embodiments, the plurality of sets of optical sources may each comprise at least one top-emitting LED and at least one super luminescent LED. In some embodiments, the emitter comprises optical sources that transmit optical radiation in the infrared or near-infrared wavelengths suitable for detecting blood analytes like glucose. In order to achieve the desired SNR for detecting analytes like glucose, the emitter may be driven using a progression from low power to higher power. In addition, the emitter may have its duty cycle modified to achieve a desired SNR.

The emitter may be constructed of materials, such as aluminum nitride and may include a heat sink to assist in heat dissipation. A thermistor may also be employed to account for heating effects on the LEDs. The emitter may further comprise a glass window and a nitrogen environment to improve transmission from the sources and prevent oxidative effects.

The sensor can be coupled to one or more monitors that process and/or display the sensor's output. The monitors can include various components, such as a sensor front end, a signal processor, a display, etc.

The sensor can be integrated with a monitor, for example, into a handheld unit including the sensor, a display and user controls. In other embodiments, the sensor can communicate with one or more processing devices. The communication can be via wire(s), cable(s), flex circuit(s), wireless technologies, or other suitable analog or digital communication methodologies and devices to perform those methodologies. Many of the foregoing arrangements allow the sensor to be attached to the measurement site while the device is attached elsewhere on a patient, such as the patient's arm, or placed at a location near the patient, such as a bed, shelf or table. The sensor or monitor can also provide outputs to a storage device or network interface.

Reference will now be made to the Figures to discuss embodiments of the present disclosure.

FIG. **1** illustrates an example of a data collection system **100**. In certain embodiments, the data collection system **100** noninvasively measure a blood analyte, such as oxygen, carbon monoxide, methemoglobin, total hemoglobin, glucose, proteins, glucose, lipids, a percentage thereof (e.g., saturation) or for measuring many other physiologically relevant patient characteristics. The system **100** can also measure additional blood analytes and/or other physiological parameters useful in determining a state or trend of wellness of a patient.

The data collection system **100** can be capable of measuring optical radiation from the measurement site. For example, in some embodiments, the data collection system **100** can employ photodiodes defined in terms of area. In an embodiment, the area is from about 1 mm^2-5 mm^2 (or higher) that are capable of detecting about 100 nanoamps (nA) or less of current resulting from measured light at full scale. In addition to having its ordinary meaning, the phrase "at full scale" can mean light saturation of a photodiode amplifier (not shown). Of course, as would be understood by a person of skill in the art from the present disclosure, various other sizes and types of photodiodes can be used with the embodiments of the present disclosure.

The data collection system **100** can measure a range of approximately about 2 nA to about 100 nA full scale. The data collection system **100** can also include sensor front-ends that are capable of processing and amplifying current from the detector(s) at signal-to-noise ratios (SNRs) of about 100 decibels (dB) or more, such as about 120 dB in order to measure various desired analytes. The data collection system **100** can operate with a lower SNR if less accuracy is desired for an analyte like glucose.

The data collection system **100** can measure analyte concentrations, including glucose, at least in part by detecting light attenuated by a measurement site **102**. The measurement site **102** can be any location on a patient's body, such as a finger, foot, ear lobe, or the like. For convenience, this disclosure is described primarily in the context of a

finger measurement site **102**. However, the features of the embodiments disclosed herein can be used with other measurement sites **102**.

In the depicted embodiment, the system **100** includes an optional tissue thickness adjuster or tissue shaper **105**, which can include one or more protrusions, bumps, lenses, or other suitable tissue-shaping mechanisms. In certain embodiments, the tissue shaper **105** is a flat or substantially flat surface that can be positioned proximate the measurement site **102** and that can apply sufficient pressure to cause the tissue of the measurement site **102** to be flat or substantially flat. In other embodiments, the tissue shaper **105** is a convex or substantially convex surface with respect to the measurement site **102**. Many other configurations of the tissue shaper **105** are possible. Advantageously, in certain embodiments, the tissue shaper **105** reduces thickness of the measurement site **102** while preventing or reducing occlusion at the measurement site **102**. Reducing thickness of the site can advantageously reduce the amount of attenuation of the light because there is less tissue through which the light must travel. Shaping the tissue in to a convex (or alternatively concave) surface can also provide more surface area from which light can be detected.

The embodiment of the data collection system **100** shown also includes an optional noise shield **103**. In an embodiment, the noise shield **103** can be advantageously adapted to reduce electromagnetic noise while increasing the transmittance of light from the measurement site **102** to one or more detectors **106** (described below). For example, the noise shield **103** can advantageously include a conductive coated glass or metal grid electrically communicating with one or more other shields of the sensor **101** or electrically grounded. In an embodiment where the noise shield **103** includes conductive coated glass, the coating can advantageously include indium tin oxide. In an embodiment, the indium tin oxide includes a surface resistivity ranging from approximately 30 ohms per square inch to about 500 ohms per square inch. In an embodiment, the resistivity is approximately 30, 200, or 500 ohms per square inch. As would be understood by a person of skill in the art from the present disclosure, other resistivities can also be used which are less than about 30 ohms or more than about 500 ohms. Other conductive materials transparent or substantially transparent to light can be used instead.

In some embodiments, the measurement site **102** is located somewhere along a non-dominant arm or a non-dominant hand, e.g., a right-handed person's left arm or left hand. In some patients, the non-dominant arm or hand can have less musculature and higher fat content, which can result in less water content in that tissue of the patient. Tissue having less water content can provide less interference with the particular wavelengths that are absorbed in a useful manner by blood analytes like glucose. Accordingly, in some embodiments, the data collection system **100** can be used on a person's non-dominant hand or arm.

The data collection system **100** can include a sensor **101** (or multiple sensors) that is coupled to a processing device or physiological monitor **109**. In an embodiment, the sensor **101** and the monitor **109** are integrated together into a single unit. In another embodiment, the sensor **101** and the monitor **109** are separate from each other and communicate one with another in any suitable manner, such as via a wired or wireless connection. The sensor **101** and monitor **109** can be attachable and detachable from each other for the convenience of the user or caregiver, for ease of storage, sterility issues, or the like. The sensor **101** and the monitor **109** will now be further described.

In the depicted embodiment shown in FIG. **1**, the sensor **101** includes an emitter **104**, a tissue shaper **105**, a set of detectors **106**, and a front-end interface **108**. The emitter **104** can serve as the source of optical radiation transmitted towards measurement site **102**. As will be described in further detail below, the emitter **104** can include one or more sources of optical radiation, such as LEDs, laser diodes, incandescent bulbs with appropriate frequency-selective filters, combinations of the same, or the like. In an embodiment, the emitter **104** includes sets of optical sources that are capable of emitting visible and near-infrared optical radiation.

In some embodiments, the emitter **104** is used as a point optical source, and thus, the one or more optical sources of the emitter **104** can be located within a close distance to each other, such as within about a 2 mm to about 4 mm. The emitters **104** can be arranged in an array, such as is described in U.S. Publication No. 2006/0211924, filed Sep. 21, 2006, titled "Multiple Wavelength Sensor Emitters," the disclosure of which is hereby incorporated by reference in its entirety. In particular, the emitters **104** can be arranged at least in part as described in paragraphs [0061] through [0068] of the aforementioned publication, which paragraphs are hereby incorporated specifically by reference. Other relative spatial relationships can be used to arrange the emitters **104**.

For analytes like glucose, currently available non-invasive techniques often attempt to employ light near the water absorbance minima at or about 1600 nm. Typically, these devices and methods employ a single wavelength or single band of wavelengths at or about 1600 nm. However, to date, these techniques have been unable to adequately consistently measure analytes like glucose based on spectroscopy.

In contrast, the emitter **104** of the data collection system **100** can emit, in certain embodiments, combinations of optical radiation in various bands of interest. For example, in some embodiments, for analytes like glucose, the emitter **104** can emit optical radiation at three (3) or more wavelengths between about 1600 nm to about 1700 nm. In particular, the emitter **104** can emit optical radiation at or about 1610 nm, about 1640 nm, and about 1665 nm. In some circumstances, the use of three wavelengths within about 1600 nm to about 1700 nm enable sufficient SNRs of about 100 dB, which can result in a measurement accuracy of about 20 mg/dL or better for analytes like glucose.

In other embodiments, the emitter **104** can use two (2) wavelengths within about 1600 nm to about 1700 nm to advantageously enable SNRs of about 85 dB, which can result in a measurement accuracy of about 25-30 mg/dL or better for analytes like glucose. Furthermore, in some embodiments, the emitter **104** can emit light at wavelengths above about 1670 nm. Measurements at these wavelengths can be advantageously used to compensate or confirm the contribution of protein, water, and other non-hemoglobin species exhibited in measurements for analytes like glucose conducted between about 1600 nm and about 1700 nm. Of course, other wavelengths and combinations of wavelengths can be used to measure analytes and/or to distinguish other types of tissue, fluids, tissue properties, fluid properties, combinations of the same or the like.

For example, the emitter **104** can emit optical radiation across other spectra for other analytes. In particular, the emitter **104** can employ light wavelengths to measure various blood analytes or percentages (e.g., saturation) thereof. For example, in one embodiment, the emitter **104** can emit optical radiation in the form of pulses at wavelengths about 905 nm, about 1050 nm, about 1200 nm, about 1300 nm, about 1330 nm, about 1610 nm, about 1640 nm, and about

1665 nm. In another embodiment, the emitter **104** can emit optical radiation ranging from about 860 nm to about 950 nm, about 950 nm to about 1100 nm, about 1100 nm to about 1270 nm, about 1250 nm to about 1350 nm, about 1300 nm to about 1360 nm, and about 1590 nm to about 1700 nm. Of course, the emitter **104** can transmit any of a variety of wavelengths of visible or near-infrared optical radiation.

Due to the different responses of analytes to the different wavelengths, certain embodiments of the data collection system **100** can advantageously use the measurements at these different wavelengths to improve the accuracy of measurements. For example, the measurements of water from visible and infrared light can be used to compensate for water absorbance that is exhibited in the near-infrared wavelengths.

As briefly described above, the emitter **104** can include sets of light-emitting diodes (LEDs) as its optical source. The emitter **104** can use one or more top-emitting LEDs. In particular, in some embodiments, the emitter **104** can include top-emitting LEDs emitting light at about 850 nm to 1350 nm.

The emitter **104** can also use super luminescent LEDs (SLEDs) or side-emitting LEDs. In some embodiments, the emitter **104** can employ SLEDs or side-emitting LEDs to emit optical radiation at about 1600 nm to about 1800 nm. Emitter **104** can use SLEDs or side-emitting LEDs to transmit near infrared optical radiation because these types of sources can transmit at high power or relatively high power, e.g., about 40 mW to about 100 mW. This higher power capability can be useful to compensate or overcome the greater attenuation of these wavelengths of light in tissue and water. For example, the higher power emission can effectively compensate and/or normalize the absorption signal for light in the mentioned wavelengths to be similar in amplitude and/or effect as other wavelengths that can be detected by one or more photodetectors after absorption. However, the embodiments of the present disclosure do not necessarily require the use of high power optical sources. For example, some embodiments may be configured to measure analytes, such as total hemoglobin (tHb), oxygen saturation (SpO_2), carboxyhemoglobin, methemoglobin, etc., without the use of high power optical sources like side emitting LEDs. Instead, such embodiments may employ other types of optical sources, such as top emitting LEDs. Alternatively, the emitter **104** can use other types of sources of optical radiation, such as a laser diode, to emit near-infrared light into the measurement site **102**.

In addition, in some embodiments, in order to assist in achieving a comparative balance of desired power output between the LEDs, some of the LEDs in the emitter **104** can have a filter or covering that reduces and/or cleans the optical radiation from particular LEDs or groups of LEDs. For example, since some wavelengths of light can penetrate through tissue relatively well, LEDs, such as some or all of the top-emitting LEDs can use a filter or covering, such as a cap or painted dye. This can be useful in allowing the emitter **104** to use LEDs with a higher output and/or to equalize intensity of LEDs.

The data collection system **100** also includes a driver **111** that drives the emitter **104**. The driver **111** can be a circuit or the like that is controlled by the monitor **109**. For example, the driver **111** can provide pulses of current to the emitter **104**. In an embodiment, the driver **111** drives the emitter **104** in a progressive fashion, such as in an alternating manner. The driver **111** can drive the emitter **104** with a series of pulses of about 1 milliwatt (mW) for some wavelengths that can penetrate tissue relatively well and from about 40 mW to about 100 mW for other wavelengths that tend to be significantly absorbed in tissue. A wide variety of other driving powers and driving methodologies can be used in various embodiments.

The driver **111** can be synchronized with other parts of the sensor **101** and can minimize or reduce jitter in the timing of pulses of optical radiation emitted from the emitter **104**. In some embodiments, the driver **111** is capable of driving the emitter **104** to emit optical radiation in a pattern that varies by less than about 10 parts-per-million.

The detectors **106** capture and measure light from the measurement site **102**. For example, the detectors **106** can capture and measure light transmitted from the emitter **104** that has been attenuated or reflected from the tissue in the measurement site **102**. The detectors **106** can output a detector signal **107** responsive to the light captured or measured. The detectors **106** can be implemented using one or more photodiodes, phototransistors, or the like.

In addition, the detectors **106** can be arranged with a spatial configuration to provide a variation of path lengths among at least some of the detectors **106**. That is, some of the detectors **106** can have the substantially, or from the perspective of the processing algorithm, effectively, the same path length from the emitter **104**. However, according to an embodiment, at least some of the detectors **106** can have a different path length from the emitter **104** relative to other of the detectors **106**. Variations in path lengths can be helpful in allowing the use of a bulk signal stream from the detectors **106**. In some embodiments, the detectors **106** may employ a linear spacing, a logarithmic spacing, or a two or three dimensional matrix of spacing, or any other spacing scheme in order to provide an appropriate variation in path lengths.

The front end interface **108** provides an interface that adapts the output of the detectors **106**, which is responsive to desired physiological parameters. For example, the front end interface **108** can adapt a signal **107** received from one or more of the detectors **106** into a form that can be processed by the monitor **109**, for example, by a signal processor **110** in the monitor **109**. The front end interface **108** can have its components assembled in the sensor **101**, in the monitor **109**, in connecting cabling (if used), combinations of the same, or the like. The location of the front end interface **108** can be chosen based on various factors including space desired for components, desired noise reductions or limits, desired heat reductions or limits, and the like.

The front end interface **108** can be coupled to the detectors **106** and to the signal processor **110** using a bus, wire, electrical or optical cable, flex circuit, or some other form of signal connection. The front end interface **108** can also be at least partially integrated with various components, such as the detectors **106**. For example, the front end interface **108** can include one or more integrated circuits that are on the same circuit board as the detectors **106**. Other configurations can also be used.

The front end interface **108** can be implemented using one or more amplifiers, such as transimpedance amplifiers, that are coupled to one or more analog to digital converters (ADCs) (which can be in the monitor **109**), such as a sigma-delta ADC. A transimpedance-based front end interface **108** can employ single-ended circuitry, differential circuitry, and/or a hybrid configuration. A transimpedance-based front end interface **108** can be useful for its sampling rate capability and freedom in modulation/demodulation algorithms. For example, this type of front end interface **108**

can advantageously facilitate the sampling of the ADCs being synchronized with the pulses emitted from the emitter **104**.

The ADC or ADCs can provide one or more outputs into multiple channels of digital information for processing by the signal processor **110** of the monitor **109**. Each channel can correspond to a signal output from a detector **106**.

In some embodiments, a programmable gain amplifier (PGA) can be used in combination with a transimpedance-based front end interface **108**. For example, the output of a transimpedance-based front end interface **108** can be output to a PGA that is coupled with an ADC in the monitor **109**. A PGA can be useful in order to provide another level of amplification and control of the stream of signals from the detectors **106**. Alternatively, the PGA and ADC components can be integrated with the transimpedance-based front end interface **108** in the sensor **101**.

In another embodiment, the front end interface **108** can be implemented using switched-capacitor circuits. A switched-capacitor-based front end interface **108** can be useful for, in certain embodiments, its resistor-free design and analog averaging properties. In addition, a switched-capacitor-based front end interface **108** can be useful because it can provide a digital signal to the signal processor **110** in the monitor **109**.

As shown in FIG. **1**, the monitor **109** can include the signal processor **110** and a user interface, such as a display **112**. The monitor **109** can also include optional outputs alone or in combination with the display **112**, such as a storage device **114** and a network interface **116**. In an embodiment, the signal processor **110** includes processing logic that determines measurements for desired analytes, such as glucose, based on the signals received from the detectors **106**. The signal processor **110** can be implemented using one or more microprocessors or subprocessors (e.g., cores), digital signal processors, application specific integrated circuits (ASICs), field programmable gate arrays (FPGAs), combinations of the same, and the like.

The signal processor **110** can provide various signals that control the operation of the sensor **101**. For example, the signal processor **110** can provide an emitter control signal to the driver **111**. This control signal can be useful in order to synchronize, minimize, or reduce jitter in the timing of pulses emitted from the emitter **104**. Accordingly, this control signal can be useful in order to cause optical radiation pulses emitted from the emitter **104** to follow a precise timing and consistent pattern. For example, when a transimpedance-based front end interface **108** is used, the control signal from the signal processor **110** can provide synchronization with the ADC in order to avoid aliasing, cross-talk, and the like. As also shown, an optional memory **113** can be included in the front-end interface **108** and/or in the signal processor **110**. This memory **113** can serve as a buffer or storage location for the front-end interface **108** and/or the signal processor **110**, among other uses.

The user interface **112** can provide an output, e.g., on a display, for presentation to a user of the data collection system **100**. The user interface **112** can be implemented as a touch-screen display, an LCD display, an organic LED display, or the like. In addition, the user interface **112** can be manipulated to allow for measurement on the non-dominant side of patient. For example, the user interface **112** can include a flip screen, a screen that can be moved from one side to another on the monitor **109**, or can include an ability to reorient its display indicia responsive to user input or device orientation. In alternative embodiments, the data collection system **100** can be provided without a user interface **112** and can simply provide an output signal to a separate display or system.

A storage device **114** and a network interface **116** represent other optional output connections that can be included in the monitor **109**. The storage device **114** can include any computer-readable medium, such as a memory device, hard disk storage, EEPROM, flash drive, or the like. The various software and/or firmware applications can be stored in the storage device **114**, which can be executed by the signal processor **110** or another processor of the monitor **109**. The network interface **116** can be a serial bus port (RS-232/RS-485), a Universal Serial Bus (USB) port, an Ethernet port, a wireless interface (e.g., WiFi such as any 802.1x interface, including an internal wireless card), or other suitable communication device(s) that allows the monitor **109** to communicate and share data with other devices. The monitor **109** can also include various other components not shown, such as a microprocessor, graphics processor, or controller to output the user interface **112**, to control data communications, to compute data trending, or to perform other operations.

Although not shown in the depicted embodiment, the data collection system **100** can include various other components or can be configured in different ways. For example, the sensor **101** can have both the emitter **104** and detectors **106** on the same side of the measurement site **102** and use reflectance to measure analytes. The data collection system **100** can also include a sensor that measures the power of light emitted from the emitter **104**.

FIGS. **2**A through **2**D illustrate example monitoring devices **200** in which the data collection system **100** can be housed. Advantageously, in certain embodiments, some or all of the example monitoring devices **200** shown can have a shape and size that allows a user to operate it with a single hand or attach it, for example, to a patient's body or limb. Although several examples are shown, many other monitoring device configurations can be used to house the data collection system **100**. In addition, certain of the features of the monitoring devices **200** shown in FIGS. **2**A through **2**D can be combined with features of the other monitoring devices **200** shown.

Referring specifically to FIG. **2**A, an example monitoring device **200**A is shown, in which a sensor **201***a* and a monitor **209***a* are integrated into a single unit. The monitoring device **200**A shown is a handheld or portable device that can measure glucose and other analytes in a patient's finger. The sensor **201***a* includes an emitter shell **204***a* and a detector shell **206***a*. The depicted embodiment of the monitoring device **200**A also includes various control buttons **208***a* and a display **210***a*.

The sensor **201***a* can be constructed of white material used for reflective purposes (such as white silicone or plastic), which can increase the usable signal at the detector **106** by forcing light back into the sensor **201***a*. Pads in the emitter shell **204***a* and the detector shell **206***a* can contain separated windows to prevent or reduce mixing of light signals, for example, from distinct quadrants on a patient's finger. In addition, these pads can be made of a relatively soft material, such as a gel or foam, in order to conform to the shape, for example, of a patient's finger. The emitter shell **204***a* and the detector shell **206***a* can also include absorbing black or grey material portions to prevent or reduce ambient light from entering into the sensor **201***a*.

In some embodiments, some or all portions of the emitter shell **204***a* and/or detector shell **206***a* can be detachable and/or disposable. For example, some or all portions of the

shells **204***a* and **206***a* can be removable pieces. The removability of the shells **204***a* and **206***a* can be useful for sanitary purposes or for sizing the sensor **201***a* to different patients. The monitor **209***a* can include a fitting, slot, magnet, or other connecting mechanism to allow the sensor **201***c* to be removably attached to the monitor **209***a*.

The monitoring device **200***a* also includes optional control buttons **208***a* and a display **210***a* that can allow the user to control the operation of the device. For example, a user can operate the control buttons **208***a* to view one or more measurements of various analytes, such as glucose. In addition, the user can operate the control buttons **208***a* to view other forms of information, such as graphs, histograms, measurement data, trend measurement data, parameter combination views, wellness indications, and the like. Many parameters, trends, alarms and parameter displays could be output to the display **210***a*, such as those that are commercially available through a wide variety of noninvasive monitoring devices from Masimo® Corporation of Irvine, Calif.

Furthermore, the controls **208***a* and/or display **210***a* can provide functionality for the user to manipulate settings of the monitoring device **200***a*, such as alarm settings, emitter settings, detector settings, and the like. The monitoring device **200***a* can employ any of a variety of user interface designs, such as frames, menus, touch-screens, and any type of button.

FIG. **2**B illustrates another example of a monitoring device **200**B. In the depicted embodiment, the monitoring device **200**B includes a finger clip sensor **201***b* connected to a monitor **209***b* via a cable **212**. In the embodiment shown, the monitor **209***b* includes a display **210***b*, control buttons **208***b* and a power button. Moreover, the monitor **209***b* can advantageously include electronic processing, signal processing, and data storage devices capable of receiving signal data from said sensor **201***b*, processing the signal data to determine one or more output measurement values indicative of one or more physiological parameters of a monitored patient, and displaying the measurement values, trends of the measurement values, combinations of measurement values, and the like.

The cable **212** connecting the sensor **201***b* and the monitor **209***b* can be implemented using one or more wires, optical fiber, flex circuits, or the like. In some embodiments, the cable **212** can employ twisted pairs of conductors in order to minimize or reduce cross-talk of data transmitted from the sensor **201***b* to the monitor **209***b*. Various lengths of the cable **212** can be employed to allow for separation between the sensor **201***b* and the monitor **209***b*. The cable **212** can be fitted with a connector (male or female) on either end of the cable **212** so that the sensor **201***b* and the monitor **209***b* can be connected and disconnected from each other. Alternatively, the sensor **201***b* and the monitor **209***b* can be coupled together via a wireless communication link, such as an infrared link, radio frequency channel, or any other wireless communication protocol and channel.

The monitor **209***b* can be attached to the patient. For example, the monitor **209***b* can include a belt clip or straps (see, e.g., FIG. **2**C) that facilitate attachment to a patient's belt, arm, leg, or the like. The monitor **209***b* can also include a fitting, slot, magnet, LEMO snap-click connector, or other connecting mechanism to allow the cable **212** and sensor **201***b* to be attached to the monitor **209**B.

The monitor **209***b* can also include other components, such as a speaker, power button, removable storage or memory (e.g., a flash card slot), an AC power port, and one or more network interfaces, such as a universal serial bus interface or an Ethernet port. For example, the monitor **209***b* can include a display **210***b* that can indicate a measurement for glucose, for example, in mg/dL. Other analytes and forms of display can also appear on the monitor **209***b*.

In addition, although a single sensor **201***b* with a single monitor **209***b* is shown, different combinations of sensors and device pairings can be implemented. For example, multiple sensors can be provided for a plurality of differing patient types or measurement sites or even patient fingers.

FIG. **2**C illustrates yet another example of monitoring device **200**C that can house the data collection system **100**. Like the monitoring device **200**B, the monitoring device **200**C includes a finger clip sensor **201***c* connected to a monitor **209***c* via a cable **212**. The cable **212** can have all of the features described above with respect to FIG. **2**B. The monitor **209***c* can include all of the features of the monitor **200**B described above. For example, the monitor **209***c* includes buttons **208***c* and a display **210***c*. The monitor **209***c* shown also includes straps **214***c* that allow the monitor **209***c* to be attached to a patient's limb or the like.

FIG. **2**D illustrates yet another example of monitoring device **200**D that can house the data collection system **100**. Like the monitoring devices **200**B and **200**C, the monitoring device **200**D includes a finger clip sensor **201***d* connected to a monitor **209***d* via a cable **212**. The cable **212** can have all of the features described above with respect to FIG. **2**B. In addition to having some or all of the features described above with respect to FIGS. **2**B and **2**C, the monitoring device **200**D includes an optional universal serial bus (USB) port **216** and an Ethernet port **218**. The USB port **216** and the Ethernet port **218** can be used, for example, to transfer information between the monitor **209***d* and a computer (not shown) via a cable. Software stored on the computer can provide functionality for a user to, for example, view physiological data and trends, adjust settings and download firmware updates to the monitor **209***b*, and perform a variety of other functions. The USB port **216** and the Ethernet port **218** can be included with the other monitoring devices **200**A, **200**B, and **200**C described above.

FIGS. **3**A through **3**C illustrate more detailed examples of embodiments of a sensor **301***a*. The sensor **301***a* shown can include all of the features of the sensors **100** and **200** described above.

Referring to FIG. **3**A, the sensor **301***a* in the depicted embodiment is a clothespin-shaped clip sensor that includes an enclosure **302***a* for receiving a patient's finger. The enclosure **302***a* is formed by an upper section or emitter shell **304***a*, which is pivotably connected with a lower section or detector shell **306***a*. The emitter shell **304***a* can be biased with the detector shell **306***a* to close together around a pivot point **303***a* and thereby sandwich finger tissue between the emitter and detector shells **304***a*, **306***a*.

In an embodiment, the pivot point **303***a* advantageously includes a pivot capable of adjusting the relationship between the emitter and detector shells **304***a*, **306***a* to effectively level the sections when applied to a tissue site. In another embodiment, the sensor **301***a* includes some or all features of the finger clip described in U.S. Publication No. 2006/0211924, incorporated above, such as a spring that causes finger clip forces to be distributed along the finger. Paragraphs [0096] through [0105], which describe this feature, are hereby specifically incorporated by reference.

The emitter shell **304***a* can position and house various emitter components of the sensor **301***a*. It can be constructed of reflective material (e.g., white silicone or plastic) and/or can be metallic or include metalicized plastic (e.g., including carbon and aluminum) to possibly serve as a heat sink. The emitter shell **304***a* can also include absorbing opaque mate-

rial, such as, for example, black or grey colored material, at various areas, such as on one or more flaps **307***a*, to reduce ambient light entering the sensor **301***a*.

The detector shell **306***a* can position and house one or more detector portions of the sensor **301***a*. The detector shell **306***a* can be constructed of reflective material, such as white silicone or plastic. As noted, such materials can increase the usable signal at a detector by forcing light back into the tissue and measurement site (see FIG. **1**). The detector shell **306***a* can also include absorbing opaque material at various areas, such as lower area **308***a*, to reduce ambient light entering the sensor **301***a*.

Referring to FIGS. **3**B and **3**C, an example of finger bed **310** is shown in the sensor **301***b*. The finger bed **310** includes a generally curved surface shaped generally to receive tissue, such as a human digit. The finger bed **310** includes one or more ridges or channels **314**. Each of the ridges **314** has a generally convex shape that can facilitate increasing traction or gripping of the patient's finger to the finger bed. Advantageously, the ridges **314** can improve the accuracy of spectroscopic analysis in certain embodiments by reducing noise that can result from a measurement site moving or shaking loose inside of the sensor **301***a*. The ridges **314** can be made from reflective or opaque materials in some embodiments to further increase SNR. In other implementations, other surface shapes can be used, such as, for example, generally flat, concave, or convex finger beds **310**.

Finger bed **310** can also include an embodiment of a tissue thickness adjuster or protrusion **305**. The protrusion **305** includes a measurement site contact area **370** (see FIG. **3**C) that can contact body tissue of a measurement site. The protrusion **305** can be removed from or integrated with the finger bed **310**. Interchangeable, different shaped protrusions **305** can also be provided, which can correspond to different finger shapes, characteristics, opacity, sizes, or the like.

Referring specifically to FIG. **3**C, the contact area **370** of the protrusion **305** can include openings or windows **320**, **321**, **322**, and **323**. When light from a measurement site passes through the windows **320**, **321**, **322**, and **323**, the light can reach one or more photodetectors (see FIG. **3**E). In an embodiment, the windows **320**, **321**, **322**, and **323** mirror specific detector placements layouts such that light can impinge through the protrusion **305** onto the photodetectors. Any number of windows **320**, **321**, **322**, and **323** can be employed in the protrusion **305** to allow light to pass from the measurement site to the photodetectors.

The windows **320**, **321**, **322**, and **323** can also include shielding, such as an embedded grid of wiring or a conductive glass coating, to reduce noise from ambient light or other electromagnetic noise. The windows **320**, **321**, **322**, and **323** can be made from materials, such as plastic or glass. In some embodiments, the windows **320**, **321**, **322**, and **323** can be constructed from conductive glass, such as indium tin oxide (ITO) coated glass. Conductive glass can be useful because its shielding is transparent, and thus allows for a larger aperture versus a window with an embedded grid of wiring. In addition, in certain embodiments, the conductive glass does not need openings in its shielding (since it is transparent), which enhances its shielding performance. For example, some embodiments that employ the conductive glass can attain up to an about 40% to about 50% greater signal than non-conductive glass with a shielding grid. In addition, in some embodiments, conductive glass can be useful for shielding noise from a greater variety of directions than non-conductive glass with a shielding grid.

Turning to FIG. **3**B, the sensor **301***a* can also include a shielding **315***a*, such as a metal cage, box, metal sheet, perforated metal sheet, a metal layer on a non-metal material, or the like. The shielding **315***a* is provided in the depicted embodiment below or embedded within the protrusion **305** to reduce noise. The shielding **315***a* can be constructed from a conductive material, such as copper. The shielding **315***a* can include one or more openings or windows (not shown). The windows can be made from glass or plastic to thereby allow light that has passed through the windows **320**, **321**, **322**, and **323** on an external surface of the protrusion **305** (see FIG. **3**C) to pass through to one or more photodetectors that can be enclosed or provided below (see FIG. **3**E).

In some embodiments, the shielding cage for shielding **315***a* can be constructed in a single manufactured component with or without the use of conductive glass. This form of construction may be useful in order to reduce costs of manufacture as well as assist in quality control of the components. Furthermore, the shielding cage can also be used to house various other components, such as sigma delta components for various embodiments of front end interfaces **108**.

In an embodiment, the photodetectors can be positioned within or directly beneath the protrusion **305** (see FIG. **3**E). In such cases, the mean optical path length from the emitters to the detectors can be reduced and the accuracy of blood analyte measurement can increase. For example, in one embodiment, a convex bump of about 1 mm to about 3 mm in height and about 10 mm^2 to about 60 mm^2 was found to help signal strength by about an order of magnitude versus other shapes. Of course other dimensions and sizes can be employed in other embodiments. Depending on the properties desired, the length, width, and height of the protrusion **305** can be selected. In making such determinations, consideration can be made of protrusion's **305** effect on blood flow at the measurement site and mean path length for optical radiation passing through openings **320**, **321**, **322**, and **323**. Patient comfort can also be considered in determining the size and shape of the protrusion.

In an embodiment, the protrusion **305** can include a pliant material, including soft plastic or rubber, which can somewhat conform to the shape of a measurement site. Pliant materials can improve patient comfort and tactility by conforming the measurement site contact area **370** to the measurement site. Additionally, pliant materials can minimize or reduce noise, such as ambient light. Alternatively, the protrusion **305** can be made from a rigid material, such as hard plastic or metal.

Rigid materials can improve measurement accuracy of a blood analyte by conforming the measurement site to the contact area **370**. The contact area **370** can be an ideal shape for improving accuracy or reducing noise. Selecting a material for the protrusion **305** can include consideration of materials that do not significantly alter blood flow at the measurement site. The protrusion **305** and the contact area **370** can include a combination of materials with various characteristics.

The contact area **370** serves as a contact surface for the measurement site. For example, in some embodiments, the contact area **370** can be shaped for contact with a patient's finger. Accordingly, the contact area **370** can be sized and shaped for different sizes of fingers. The contact area **370** can be constructed of different materials for reflective purposes as well as for the comfort of the patient. For example,

Masimo Ex. 1041
IPR Petition - US D962,936

the contact area **370** can be constructed from materials having various hardness and textures, such as plastic, gel, foam, and the like.

The formulas and analysis that follow with respect to FIG. **5** provide insight into how selecting these variables can alter transmittance and intensity gain of optical radiation that has been applied to the measurement site. These examples do not limit the scope of this disclosure.

Referring to FIG. **5**, a plot **500** is shown that illustrates examples of effects of embodiments of the protrusion **305** on the SNR at various wavelengths of light. As described above, the protrusion **305** can assist in conforming the tissue and effectively reduce its mean path length. In some instances, this effect by the protrusion **305** can have significant impact on increasing the SNR.

According to the Beer Lambert law, a transmittance of light (I) can be expressed as follows: $I=I_o*e^{-m*b*c}$, where I_o is the initial power of light being transmitted, m is the path length traveled by the light, and the component "b*c" corresponds to the bulk absorption of the light at a specific wavelength of light. For light at about 1600 nm to about 1700 nm, for example, the bulk absorption component is generally around 0.7 mm^{-1}. Assuming a typical finger thickness of about 12 mm and a mean path length of 20 mm due to tissue scattering, then $I=I_o*e^{(-20*0.7)}$.

In an embodiment where the protrusion **305** is a convex bump, the thickness of the finger can be reduced to 10 mm (from 12 mm) for some fingers and the effective light mean path is reduced to about 16.6 mm from 20 mm (see box **510**). This results in a new transmittance, $I_1=I_o*e^{(-16.6*0.7)}$. A curve for a typical finger (having a mean path length of 20 mm) across various wavelengths is shown in the plot **500** of FIG. **5**. The plot **500** illustrates potential effects of the protrusion **305** on the transmittance. As illustrated, comparing I and I_1 results in an intensity gain of $e^{(-16.6*0.7)}/e^{(-20*0.7)}$, which is about a 10 times increase for light in the about 1600 nm to about 1700 nm range. Such an increase can affect the SNR at which the sensor can operate. The foregoing gains can be due at least in part to the about 1600 nm to about 1700 nm range having high values in bulk absorptions (water, protein, and the like), e.g., about 0.7 mm^{-1}. The plot **500** also shows improvements in the visible/near-infrared range (about 600 nm to about 1300 nm).

Turning again to FIGS. **3**A through **3**C, an example heat sink **350***a* is also shown. The heat sink **350***a* can be attached to, or protrude from an outer surface of, the sensor **301***a*, thereby providing increased ability for various sensor components to dissipate excess heat. By being on the outer surface of the sensor **301***a* in certain embodiments, the heat sink **350***a* can be exposed to the air and thereby facilitate more efficient cooling. In an embodiment, one or more of the emitters (see FIG. **1**) generate sufficient heat that inclusion of the heat sink **350***a* can advantageously allows the sensor **301***a* to remain safely cooled. The heat sink **350***a* can include one or more materials that help dissipate heat, such as, for example, aluminum, steel, copper, carbon, combinations of the same, or the like. For example, in some embodiments, the emitter shell **304***a* can include a heat conducting material that is also readily and relatively inexpensively moldable into desired shapes and forms.

In some embodiments, the heat sink **350***a* includes metalicized plastic. The metalicized plastic can include aluminum and carbon, for example. The material can allow for improved thermal conductivity and diffusivity, which can increase commercial viability of the heat sink. In some embodiments, the material selected to construct the heat sink **350***a* can include a thermally conductive liquid crystalline polymer, such as CoolPoly® D5506, commercially available from Cool Polymers®, Inc. of Warwick, R.I. Such a material can be selected for its electrically non-conductive and dielectric properties so as, for example, to aid in electrical shielding. In an embodiment, the heat sink **350***a* provides improved heat transfer properties when the sensor **301***a* is active for short intervals of less than a full day's use. In an embodiment, the heat sink **350***a* can advantageously provide improved heat transfers in about three (3) to about four (4) minute intervals, for example, although a heat sink **350***a* can be selected that performs effectively in shorter or longer intervals.

Moreover, the heat sink **350***a* can have different shapes and configurations for aesthetic as well as for functional purposes. In an embodiment, the heat sink is configured to maximize heat dissipation, for example, by maximizing surface area. In an embodiment, the heat sink **350***a* is molded into a generally curved surface and includes one or more fins, undulations, grooves, or channels. The example heat sink **350***a* shown includes fins **351***a* (see FIG. **3**A).

An alternative shape of a sensor **301***b* and heat sink **350***b* is shown in FIG. **3**D. The sensor **301***b* can include some or all of the features of the sensor **301***a*. For example, the sensor **301***b* includes an enclosure **302***b* formed by an emitter shell **304***b* and a detector shell **306***b*, pivotably connected about a pivot **303***a*. The emitter shell **304***b* can also include absorbing opaque material on one or more flaps **307***b*, and the detector shell **306***a* can also include absorbing opaque material at various areas, such as lower area **308***b*.

However, the shape of the sensor **301***b* is different in this embodiment. In particular, the heat sink **350***b* includes comb protrusions **351***b*. The comb protrusions **351***b* are exposed to the air in a similar manner to the fins **351***a* of the heat sink **350***a*, thereby facilitating efficient cooling of the sensor **301***b*.

FIG. **3**E illustrates a more detailed example of a detector shell **306***b* of the sensor **301***b*. The features described with respect to the detector shell **306***b* can also be used with the detector shell **306***a* of the sensor **301***a*.

As shown, the detector shell **306***b* includes detectors **316**. The detectors **316** can have a predetermined spacing **340** from each other, or a spatial relationship among one another that results in a spatial configuration. This spatial configuration can purposefully create a variation of path lengths among detectors **316** and the emitter discussed above.

In the depicted embodiment, the detector shell **316** can hold multiple (e.g., two, three, four, etc.) photodiode arrays that are arranged in a two-dimensional grid pattern. Multiple photodiode arrays can also be useful to detect light piping (e.g., light that bypasses measurement site **102**). In the detector shell **316**, walls can be provided to separate the individual photodiode arrays to prevent or reduce mixing of light signals from distinct quadrants. In addition, the detector shell **316** can be covered by windows of transparent material, such as glass, plastic, or the like, to allow maximum or increased transmission of power light captured. In various embodiments, the transparent materials used can also be partially transparent or translucent or can otherwise pass some or all of the optical radiation passing through them. As noted, this window can include some shielding in the form of an embedded grid of wiring, or a conductive layer or coating.

As further illustrated by FIG. **3**E, the detectors **316** can have a spatial configuration of a grid. However, the detectors **316** can be arranged in other configurations that vary the path length. For example, the detectors **316** can be arranged in a linear array, a logarithmic array, a two-dimensional

array, a zig-zag pattern, or the like. Furthermore, any number of the detectors **316** can be employed in certain embodiments.

FIG. **3**F illustrates another embodiment of a sensor **301***f*. The sensor **301***f* can include some or all of the features of the sensor **301***a* of FIG. **3**A described above. For example, the sensor **301***f* includes an enclosure **302***f* formed by an upper section or emitter shell **304***f*, which is pivotably connected with a lower section or detector shell **306***f* around a pivot point **303***f*. The emitter shell **304***f* can also include absorbing opaque material on various areas, such as on one or more flaps **307***f*, to reduce ambient light entering the sensor **301***f*. The detector shell **306***f* can also include absorbing opaque material at various areas, such as a lower area **308***f*. The sensor **301***f* also includes a heat sink **350***f*, which includes fins **351***f*.

In addition to these features, the sensor **301***f* includes a flex circuit cover **360**, which can be made of plastic or another suitable material. The flex circuit cover **360** can cover and thereby protect a flex circuit (not shown) that extends from the emitter shell **304***f* to the detector shell **306***f*. An example of such a flex circuit is illustrated in U.S. Publication No. 2006/0211924, incorporated above (see FIG. **46** and associated description, which is hereby specifically incorporated by reference). The flex circuit cover **360** is shown in more detail below in FIG. **17**.

In addition, sensors **301***a-f* has extra length—extends to second joint on finger—Easier to place, harder to move due to cable, better for light piping.

FIGS. **4**A through **4**C illustrate example arrangements of a protrusion **405**, which is an embodiment of the protrusion **305** described above. In an embodiment, the protrusion **405** can include a measurement site contact area **470**. The measurement site contact area **470** can include a surface that molds body tissue of a measurement site, such as a finger, into a flat or relatively flat surface.

The protrusion **405** can have dimensions that are suitable for a measurement site such as a patient's finger. As shown, the protrusion **405** can have a length **400**, a width **410**, and a height **430**. The length **400** can be from about 9 to about 11 millimeters, e.g., about 10 millimeters. The width **410** can be from about 7 to about 9 millimeters, e.g., about 8 millimeters. The height **430** can be from about 0.5 millimeters to about 3 millimeters, e.g., about 2 millimeters. In an embodiment, the dimensions **400**, **410**, and **430** can be selected such that the measurement site contact area **470** includes an area of about 80 square millimeters, although larger and smaller areas can be used for different sized tissue for an adult, an adolescent, or infant, or for other considerations.

The measurement site contact area **470** can also include differently shaped surfaces that conform the measurement site into different shapes. For example, the measurement site contact area **470** can be generally curved and/or convex with respect to the measurement site. The measurement site contact area **470** can be other shapes that reduce or even minimize air between the protrusion **405** and/or the measurement site. Additionally, the surface pattern of the measurement site contact area **470** can vary from smooth to bumpy, e.g., to provide varying levels of grip.

In FIGS. **4**A and **4**C, openings or windows **420**, **421**, **422**, and **423** can include a wide variety of shapes and sizes, including for example, generally square, circular, triangular, or combinations thereof. The windows **420**, **421**, **422**, and **423** can be of non-uniform shapes and sizes. As shown, the windows **420**, **421**, **422**, and **423** can be evenly spaced out in a grid like arrangement. Other arrangements or patterns of arranging the windows **420**, **421**, **422**, and **423** are possible. For example, the windows **420**, **421**, **422**, and **423** can be placed in a triangular, circular, or linear arrangement. In some embodiments, the windows **420**, **421**, **422**, and **423** can be placed at different heights with respect to the finger bed **310** of FIG. **3**. The windows **420**, **421**, **422**, and **423** can also mimic or approximately mimic a configuration of, or even house, a plurality of detectors.

FIGS. **6**A through **6**D illustrate another embodiment of a protrusion **605** that can be used as the tissue shaper **105** described above or in place of the protrusions **305**, **405** described above. The depicted protrusion **605** is a partially cylindrical lens having a partial cylinder **608** and an extension **610**. The partial cylinder **608** can be a half cylinder in some embodiments; however, a smaller or greater portion than half of a cylinder can be used. Advantageously, in certain embodiments, the partially cylindrical protrusion **605** focuses light onto a smaller area, such that fewer detectors can be used to detect the light attenuated by a measurement site.

FIG. **6**A illustrates a perspective view of the partially cylindrical protrusion **605**. FIG. **6**B illustrates a front elevation view of the partially cylindrical protrusion **605**. FIG. **6**C illustrates a side view of the partially cylindrical protrusion **605**. FIG. **6**D illustrates a top view of the partially cylindrical protrusion **605**.

Advantageously, in certain embodiments, placing the partially cylindrical protrusion **605** over the photodiodes in any of the sensors described above adds multiple benefits to any of the sensors described above. In one embodiment, the partially cylindrical protrusion **605** penetrates into the tissue and reduces the path length of the light traveling in the tissue, similar to the protrusions described above.

The partially cylindrical protrusion **605** can also collect light from a large surface and focus down the light to a smaller area. As a result, in certain embodiments, signal strength per area of the photodiode can be increased. The partially cylindrical protrusion **605** can therefore facilitate a lower cost sensor because, in certain embodiments, less photodiode area can be used to obtain the same signal strength. Less photodiode area can be realized by using smaller photodiodes or fewer photodiodes (see, e.g., FIG. **14**). If fewer or smaller photodiodes are used, the partially cylindrical protrusion **605** can also facilitate an improved SNR of the sensor because fewer or smaller photodiodes can have less dark current.

The dimensions of the partially cylindrical protrusion **605** can vary based on, for instance, a number of photodiodes used with the sensor. Referring to FIG. **6**C, the overall height of the partially cylindrical protrusion **605** (measurement "a") in some implementations is about 1 to about 3 mm. A height in this range can allow the partially cylindrical protrusion **605** to penetrate into the pad of the finger or other tissue and reduce the distance that light travels through the tissue. Other heights, however, of the partially cylindrical protrusion **605** can also accomplish this objective. For example, the chosen height of the partially cylindrical protrusion **605** can be selected based on the size of the measurement site, whether the patient is an adult or child, and so on. In an embodiment, the height of the protrusion **605** is chosen to provide as much tissue thickness reduction as possible while reducing or preventing occlusion of blood vessels in the tissue.

Referring to FIG. **6**D, the width of the partially cylindrical protrusion **605** (measurement "b") can be about 3 to about 5 mm. In one embodiment, the width is about 4 mm. In one embodiment, a width in this range provides good penetration

of the partially cylindrical protrusion **605** into the tissue to reduce the path length of the light. Other widths, however, of the partially cylindrical protrusion **605** can also accomplish this objective. For example, the width of the partially cylindrical protrusion **605** can vary based on the size of the measurement site, whether the patient is an adult or child, and so on. In addition, the length of the protrusion **605** could be about 10 mm, or about 8 mm to about 12 mm, or smaller than 8 mm or greater than 12 mm.

In certain embodiments, the focal length (f) for the partially cylindrical protrusion **605** can be expressed as:

$$f = \frac{R}{n-1},$$

where R is the radius of curvature of the partial cylinder **608** and n is the index of refraction of the material used. In certain embodiments, the radius of curvature can be between about 1.5 mm and about 2 mm. In another embodiment, the partially cylindrical protrusion **605** can include a material, such as nBK7 glass, with an index of refraction of around 1.5 at 1300 nm, which can provide focal lengths of between about 3 mm and about 4 mm.

A partially cylindrical protrusion **605** having a material with a higher index of refraction such as nSF11 glass (e.g., n=1.75 at 1300 nm) can provide a shorter focal length and possibly a smaller photodiode chip, but can also cause higher reflections due to the index of refraction mismatch with air. Many types of glass or plastic can be used with index of refraction values ranging from, for example, about 1.4 to about 1.9. The index of refraction of the material of the protrusion **605** can be chosen to improve or optimize the light focusing properties of the protrusion **605**. A plastic partially cylindrical protrusion **605** could provide the cheapest option in high volumes but can also have some undesired light absorption peaks at wavelengths higher than 1500 nm. Other focal lengths and materials having different indices of refraction can be used for the partially cylindrical protrusion **605**.

Placing a photodiode at a given distance below the partially cylindrical protrusion **605** can facilitate capturing some or all of the light traveling perpendicular to the lens within the active area of the photodiode (see FIG. **14**). Different sizes of the partially cylindrical protrusion **605** can use different sizes of photodiodes. The extension **610** added onto the bottom of the partial cylinder **608** is used in certain embodiments to increase the height of the partially cylindrical protrusion **605**. In an embodiment, the added height is such that the photodiodes are at or are approximately at the focal length of the partially cylindrical protrusion **605**. In an embodiment, the added height provides for greater thinning of the measurement site. In an embodiment, the added height assists in deflecting light piped through the sensor. This is because light piped around the sensor passes through the side walls of the added height without being directed toward the detectors. The extension **610** can also further facilitate the protrusion **605** increasing or maximizing the amount of light that is provided to the detectors. In some embodiments, the extension **610** can be omitted.

FIG. **6**E illustrates another view of the sensor **301***f* of FIG. **3**F, which includes an embodiment of a partially cylindrical protrusion **605***b*. Like the sensor **301**A shown in FIGS. **3**B and **3**C, the sensor **301***f* includes a finger bed **310***f*. The finger bed **310***f* includes a generally curved surface shaped generally to receive tissue, such as a human digit. The finger bed **310***f* also includes the ridges or channels **314** described above with respect to FIGS. **3**B and **3**C.

The example of finger bed **310***f* shown also includes the protrusion **605***b*, which includes the features of the protrusion **605** described above. In addition, the protrusion **605***b* also includes chamfered edges **607** on each end to provide a more comfortable surface for a finger to slide across (see also FIG. **14**D). In another embodiment, the protrusion **605***b* could instead include a single chamfered edge **607** proximal to the ridges **314**. In another embodiment, one or both of the chamfered edges **607** could be rounded.

The protrusion **605***b* also includes a measurement site contact area **670** that can contact body tissue of a measurement site. The protrusion **605***b* can be removed from or integrated with the finger bed **310***f*. Interchangeable, differently shaped protrusions **605***b* can also be provided, which can correspond to different finger shapes, characteristics, opacity, sizes, or the like.

FIGS. **7**A and **7**B illustrate block diagrams of sensors **701** that include example arrangements of conductive glass or conductive coated glass for shielding. Advantageously, in certain embodiments, the shielding can provide increased SNR. The features of the sensors **701** can be implemented with any of the sensors **101**, **201**, **301** described above. Although not shown, the partially cylindrical protrusion **605** of FIG. **6** can also be used with the sensors **701** in certain embodiments.

For example, referring specifically to FIG. **7**A, the sensor **701***a* includes an emitter housing **704***a* and a detector housing **706**. The emitter housing **704***a* includes LEDs **104**. The detector housing **706***a* includes a tissue bed **710***a* with an opening or window **703***a*, the conductive glass **730***a*, and one or more photodiodes for detectors **106** provided on a submount **707***a*.

During operation, a finger **102** can be placed on the tissue bed **710***a* and optical radiation can be emitted from the LEDs **104**. Light can then be attenuated as it passes through or is reflected from the tissue of the finger **102**. The attenuated light can then pass through the opening **703***a* in the tissue bed **710***a*. Based on the received light, the detectors **106** can provide a detector signal **107**, for example, to the front end interface **108** (see FIG. **1**).

In the depicted embodiment, the conductive glass **730** is provided in the opening **703**. The conductive glass **730** can thus not only permit light from the finger to pass to the detectors **106**, but it can also supplement the shielding of the detectors **106** from noise. The conductive glass **730** can include a stack or set of layers. In FIG. **7**A, the conductive glass **730***a* is shown having a glass layer **731** proximate the finger **102** and a conductive layer **733** electrically coupled to the shielding **790***a*.

In an embodiment, the conductive glass **730***a* can be coated with a conductive, transparent or partially transparent material, such as a thin film of indium tin oxide (ITO). To supplement electrical shielding effects of a shielding enclosure **790***a*, the conductive glass **730***a* can be electrically coupled to the shielding enclosure **790***a*. The conductive glass **730***a* can be electrically coupled to the shielding **704***a* based on direct contact or via other connection devices, such as a wire or another component.

The shielding enclosure **790***a* can be provided to encompass the detectors **106** to reduce or prevent noise. For example, the shielding enclosure **790***a* can be constructed from a conductive material, such as copper, in the form of a metal cage. The shielding or enclosure a can include an opaque material to not only reduce electrical noise, but also ambient optical noise.

In some embodiments, the shielding enclosure **790***a* can be constructed in a single manufactured component with or without the use of conductive glass. This form of construction may be useful in order to reduce costs of manufacture as well as assist in quality control of the components. Furthermore, the shielding enclosure **790***a* can also be used to house various other components, such as sigma delta components for various embodiments of front end interfaces **108**.

Referring to FIG. **7**B, another block diagram of an example sensor **701***b* is shown. A tissue bed **710***b* of the sensor **701***b* includes a protrusion **705***b*, which is in the form of a convex bump. The protrusion **705***b* can include all of the features of the protrusions or tissue shaping materials described above. For example, the protrusion **705***b* includes a contact area **370** that comes in contact with the finger **102** and which can include one or more openings **703***b*. One or more components of conductive glass **730***b* can be provided in the openings **703**. For example, in an embodiment, each of the openings **703** can include a separate window of the conductive glass **730***b*. In an embodiment, a single piece of the conductive glass **730***b* can used for some or all of the openings **703***b*. The conductive glass **730***b* is smaller than the conductive glass **730***a* in this particular embodiment.

A shielding enclosure **790***b* is also provided, which can have all the features of the shielding enclosure **790***a*. The shielding enclosure **790***b* is smaller than the shielding enclosure **790***a*; however, a variety of sizes can be selected for the shielding enclosures **790**.

In some embodiments, the shielding enclosure **790***b* can be constructed in a single manufactured component with or without the use of conductive glass. This form of construction may be useful in order to reduce costs of manufacture as well as assist in quality control of the components. Furthermore, the shielding enclosure **790***b* can also be used to house various other components, such as sigma delta components for various embodiments of front end interfaces **108**.

FIGS. **8**A through **8**D illustrate a perspective view, side views, and a bottom elevation view of the conductive glass described above with respect to the sensors **701***a*, **701***b*. As shown in the perspective view of FIG. **8**A and side view of FIG. **8**B, the conductive glass **730** includes the electrically conductive material **733** described above as a coating on the glass layer **731** described above to form a stack. In an embodiment where the electrically conductive material **733** includes indium tin oxide, surface resistivity of the electrically conductive material **733** can range approximately from 30 ohms per square inch to 500 ohms per square inch, or approximately 30, 200, or 500 ohms per square inch. As would be understood by a person of skill in the art from the present disclosure, other resistivities can also be used which are less than 30 ohms or more than 500 ohms. Other transparent, electrically conductive materials can be used as the material **733**.

Although the conductive material **733** is shown spread over the surface of the glass layer **731**, the conductive material **733** can be patterned or provided on selected portions of the glass layer **731**. Furthermore, the conductive material **733** can have uniform or varying thickness depending on a desired transmission of light, a desired shielding effect, and other considerations.

In FIG. **8**C, a side view of a conductive glass **830***a* is shown to illustrate an embodiment where the electrically conductive material **733** is provided as an internal layer between two glass layers **731**, **835**. Various combinations of integrating electrically conductive material **733** with glass are possible. For example, the electrically conductive material **733** can be a layer within a stack of layers. This stack of layers can include one or more layers of glass **731**, **835**, as well as one or more layers of conductive material **733**. The stack can include other layers of materials to achieve desired characteristics.

In FIG. **8**D, a bottom perspective view is shown to illustrate an embodiment where a conductive glass **830***b* can include conductive material **837** that occupies or covers a portion of a glass layer **839**. This embodiment can be useful, for example, to create individual, shielded windows for detectors **106**, such as those shown in FIG. **3**C. The conductive material **837** can be patterned to include an area **838** to allow light to pass to detectors **106** and one or more strips **841** to couple to the shielding **704** of FIG. **7**.

Other configurations and patterns for the conductive material can be used in certain embodiments, such as, for example, a conductive coating lining periphery edges, a conductive coating outlaid in a pattern including a grid or other pattern, a speckled conductive coating, coating outlaid in lines in either direction or diagonally, varied thicknesses from the center out or from the periphery in, or other suitable patterns or coatings that balance the shielding properties with transparency considerations.

FIG. **9** depicts an example graph **900** that illustrates comparative results obtained by an example sensor having components similar to those disclosed above with respect to FIGS. **7** and **8**. The graph **900** depicts the results of the percentage of transmission of varying wavelengths of light for different types of windows used in the sensors described above.

A line **915** on the graph **900** illustrates example light transmission of a window made from plain glass. As shown, the light transmission percentage of varying wavelengths of light is approximately 90% for a window made from plain glass. A line **920** on the graph **900** demonstrates an example light transmission percentage for an embodiment in which a window is made from glass having an ITO coating with a surface resistivity of 500 ohms per square inch. A line **925** on the graph **900** shows an example light transmission for an embodiment in which a window is made from glass that includes a coating of ITO oxide with a surface resistivity of 200 ohms per square inch. A line **930** on the graph **900** shows an example light transmission for an embodiment in which a window is made from glass that includes a coating of ITO oxide with a surface resistivity of 30 ohms per square inch.

The light transmission percentage for a window with currently available embedded wiring can have a light transmission percentage of approximately 70%. This lower percentage of light transmission can be due to the opacity of the wiring employed in a currently available window with wiring. Accordingly, certain embodiments of glass coatings described herein can employ, for example, ITO coatings with different surface resistivity depending on the desired light transmission, wavelengths of light used for measurement, desired shielding effect, and other criteria.

FIGS. **10**A through **10**B illustrate comparative noise floors of example implementations of the sensors described above. Noise can include optical noise from ambient light and electro-magnetic noise, for example, from surrounding electrical equipment. In FIG. **10**A, a graph **1000** depicts possible noise floors for different frequencies of noise for an embodiment in which one of the sensors described above included separate windows for four (4) detectors **106**. One or more of the windows included an embedded grid of wiring as a noise shield. Symbols **1030**-**1033** illustrate the

Masimo Ex. 1041
IPR Petition - US D962,936

noise floor performance for this embodiment. As can be seen, the noise floor performance can vary for each of the openings and based on the frequency of the noise.

In FIG. **10**B, a graph **1050** depicts a noise floor for frequencies of noise **1070** for an embodiment in which the sensor included separate openings for four (4) detectors **106** and one or more windows that include an ITO coating. In this embodiment, a surface resistivity of the ITO used was about 500 ohms per square inch. Symbols **1080-1083** illustrate the noise floor performance for this embodiment. As can be seen, the noise floor performance for this embodiment can vary less for each of the openings and provide lower noise floors in comparison to the embodiment of FIG. **10**A.

FIG. **11**A illustrates an example structure for configuring the set of optical sources of the emitters described above. As shown, an emitter **104** can include a driver **1105**, a thermistor **1120**, a set of top-emitting LEDs **1102** for emitting red and/or infrared light, a set of side-emitting LEDs **1104** for emitting near infrared light, and a submount **1106**.

The thermistor **1120** can be provided to compensate for temperature variations. For example, the thermistor **1120** can be provided to allow for wavelength centroid and power drift of LEDs **1102** and **1104** due to heating. In addition, other thermistors can be employed, for example, to measure a temperature of a measurement site. The temperature can be displayed on a display device and used by a caregiver. Such a temperature can also be helpful in correcting for wavelength drift due to changes in water absorption, which can be temperature dependent, thereby providing more accurate data useful in detecting blood analytes like glucose. In addition, using a thermistor or other type of temperature sensitive device may be useful for detecting extreme temperatures at the measurement site that are too hot or too cold. The presence of low perfusion may also be detected, for example, when the finger of a patient has become too cold. Moreover, shifts in temperature at the measurement site can alter the absorption spectrum of water and other tissue in the measurement cite. A thermistor's temperature reading can be used to adjust for the variations in absorption spectrum changes in the measurement site.

The driver **1105** can provide pulses of current to the emitter **1104**. In an embodiment, the driver **1105** drives the emitter **1104** in a progressive fashion, for example, in an alternating manner based on a control signal from, for example, a processor (e.g., the processor **110**). For example, the driver **1105** can drive the emitter **1104** with a series of pulses to about 1 milliwatt (mW) for visible light to light at about 1300 nm and from about 40 mW to about 100 mW for light at about 1600 nm to about 1700 nm. However, a wide number of driving powers and driving methodologies can be used. The driver **1105** can be synchronized with other parts of the sensor and can minimize or reduce any jitter in the timing of pulses of optical radiation emitted from the emitter **1104**. In some embodiments, the driver **1105** is capable of driving the emitter **1104** to emit an optical radiation in a pattern that varies by less than about 10 parts-per-million; however other amounts of variation can be used.

The submount **1106** provides a support structure in certain embodiments for aligning the top-emitting LEDs **1102** and the side-emitting LEDs **1104** so that their optical radiation is transmitted generally towards the measurement site. In some embodiments, the submount **1106** is also constructed of aluminum nitride (AlN) or beryllium oxide (BEO) for heat dissipation, although other materials or combinations of materials suitable for the submount **1106** can be used.

FIG. **11**B illustrates a configuration of emitting optical radiation into a measurement site for measuring a blood constituent or analyte like glucose. In some embodiments, emitter **104** may be driven in a progressive fashion to minimize noise and increase SNR of sensor **101**. For example, emitter **104** may be driven based on a progression of power/current delivered to LEDs **1102** and **1104**.

In some embodiments, emitter **104** may be configured to emit pulses centered about 905 nm, about 1050 nm, about 1200 nm, about 1300 nm, about 1330 nm, about 1610 nm, about 1640 nm, and about 1665 nm. In another embodiment, the emitter **104** may emit optical radiation ranging from about 860 nm to about 950 nm, about 950 nm to about 1100 nm, about 1100 nm to about 1270 nm, about 1250 nm to about 1350 nm, about 1300 nm to about 1360 nm, and about 1590 nm to about 1700 nm. Of course, emitter **104** may be configured to transmit any of a variety of wavelengths of visible, or near-infrared optical radiation.

For purposes of illustration, FIG. **11**B shows a sequence of pulses of light at wavelengths of around 905 nm, around 1200 nm, around 1300 nm, and around 1330 nm from top emitting LEDs **1102**. FIG. **11**B also shows that emitter **104** may then emit pulses centered at around 1630 nm, around 1660 nm, and around 1615 nm from side emitting LEDs **1104**. Emitter **104** may be progressively driven at higher power/current. This progression may allow driver circuit **105** to stabilize in its operations, and thus, provide a more stable current/power to LEDs **1102** and **1104**.

For example, as shown in FIG. **11**B, the sequence of optical radiation pulses are shown having a logarithmic-like progression in power/current. In some embodiments, the timing of these pulses is based on a cycle of about 400 slots running at 48 kHz (e.g. each time slot may be approximately 0.02 ms or 20 microseconds). An artisan will recognize that term "slots" includes its ordinary meaning, which includes a time period that may also be expressed in terms of a frequency. In the example shown, pulses from top emitting LEDs **1102** may have a pulse width of about 40 time slots (e.g., about 0.8 ms) and an off period of about 4 time slots in between. In addition, pulses from side emitting LEDs **1104** (e.g., or a laser diode) may have a pulse width of about 60 time slots (e.g., about 1.25 ms) and a similar off period of about 4 time slots. A pause of about 70 time slots (e.g. 1.5 ms) may also be provided in order to allow driver circuit **1105** to stabilize after operating at higher current/power.

As shown in FIG. **11**B, top emitting LEDs **1102** may be initially driven with a power to approximately 1 mW at a current of about 20-100 mA. Power in these LEDs may also be modulated by using a filter or covering of black dye to reduce power output of LEDs. In this example, top emitting LEDs **1102** may be driven at approximately 0.02 to 0.08 mW. The sequence of the wavelengths may be based on the current requirements of top emitting LEDs **502** for that particular wavelength. Of course, in other embodiments, different wavelengths and sequences of wavelengths may be output from emitter **104**.

Subsequently, side emitting LEDs **1104** may be driven at higher powers, such as about 40-100 mW and higher currents of about 600-800 mA. This higher power may be employed in order to compensate for the higher opacity of tissue and water in measurement site **102** to these wavelengths. For example, as shown, pulses at about 1630 nm, about 1660 nm, and about 1615 nm may be output with progressively higher power, such as at about 40 mW, about 50 mW, and about 60 mW, respectively. In this embodiment, the order of wavelengths may be based on the optical characteristics of that wavelength in tissue as well as the

Masimo Ex. 1041
IPR Petition - US D962,936

current needed to drive side emitting LEDs **1104**. For example, in this embodiment, the optical pulse at about 1615 nm is driven at the highest power due to its sensitivity in detecting analytes like glucose and the ability of light at this wavelength to penetrate tissue. Of course, different wavelengths and sequences of wavelengths may be output from emitter **104**.

As noted, this progression may be useful in some embodiments because it allows the circuitry of driver circuit **1105** to stabilize its power delivery to LEDs **1102** and **1104**. Driver circuit **1105** may be allowed to stabilize based on the duty cycle of the pulses or, for example, by configuring a variable waiting period to allow for stabilization of driver circuit **1105**. Of course, other variations in power/current and wavelength may also be employed in the present disclosure.

Modulation in the duty cycle of the individual pulses may also be useful because duty cycle can affect the signal noise ratio of the system **100**. That is, as the duty cycle is increased so may the signal to noise ratio.

Furthermore, as noted above, driver circuit **1105** may monitor temperatures of the LEDs **1102** and **1104** using the thermistor **1120** and adjust the output of LEDs **1102** and **1104** accordingly. Such a temperature may be to help sensor **101** correct for wavelength drift due to changes in water absorption, which can be temperature dependent.

FIG. **11**C illustrates another exemplary emitter that may be employed in the sensor according to an embodiment of the disclosure. As shown, the emitter **104** can include components mounted on a substrate **1108** and on submount **1106**. In particular, top-emitting LEDs **1102** for emitting red and/or infrared light may be mounted on substrate **1108**. Side emitting LEDS **1104** may be mounted on submount **1106**. As noted, side-emitting LEDs **1104** may be included in emitter **104** for emitting near infrared light.

As also shown, the sensor of FIG. **11**C may include a thermistor **1120**. As noted, the thermistor **1120** can be provided to compensate for temperature variations. The thermistor **1120** can be provided to allow for wavelength centroid and power drift of LEDs **1102** and **1104** due to heating. In addition, other thermistors (not shown) can be employed, for example, to measure a temperature of a measurement site. Such a temperature can be helpful in correcting for wavelength drift due to changes in water absorption, which can be temperature dependent, thereby providing more accurate data useful in detecting blood analytes like glucose.

In some embodiments, the emitter **104** may be implemented without the use of side emitting LEDs. For example, certain blood constituents, such as total hemoglobin, can be measured by embodiments of the disclosure without the use of side emitting LEDs. FIG. **11**D illustrates another exemplary emitter that may be employed in the sensor according to an embodiment of the disclosure. In particular, an emitter **104** that is configured for a blood constituent, such as total hemoglobin, is shown. The emitter **104** can include components mounted on a substrate **1108**. In particular, top-emitting LEDs **1102** for emitting red and/or infrared light may be mounted on substrate **1108**.

As also shown, the emitter of FIG. **11**D may include a thermistor **1120**. The thermistor **1120** can be provided to compensate for temperature variations. The thermistor **1120** can be provided to allow for wavelength centroid and power drift of LEDs **1102** due to heating.

FIG. **12**A illustrates a detector submount **1200** having photodiode detectors that are arranged in a grid pattern on the detector submount **1200** to capture light at different quadrants from a measurement site. One detector submount **1200** can be placed under each window of the sensors described above, or multiple windows can be placed over a single detector submount **1200**. The detector submount **1200** can also be used with the partially cylindrical protrusion **605** described above with respect to FIG. **6**.

The detectors include photodiode detectors 1-4 that are arranged in a grid pattern on the submount **1200** to capture light at different quadrants from the measurement site. As noted, other patterns of photodiodes, such as a linear row, or logarithmic row, can also be employed in certain embodiments.

As shown, the detectors 1-4 may have a predetermined spacing from each other, or spatial relationship among one another that result in a spatial configuration. This spatial configuration can be configured to purposefully create a variation of path lengths among detectors **106** and the point light source discussed above.

Detectors may hold multiple (e.g., two, three, four, etc.) photodiode arrays that are arranged in a two-dimensional grid pattern. Multiple photodiode arrays may also be useful to detect light piping (i.e., light that bypasses measurement site **102**). As shown, walls may separate the individual photodiode arrays to prevent mixing of light signals from distinct quadrants. In addition, as noted, the detectors may be covered by windows of transparent material, such as glass, plastic, etc., to allow maximum transmission of power light captured. As noted, this window may comprise some shielding in the form of an embedded grid of wiring, or a conductive layer or coating.

FIGS. **12**B through **12**D illustrate a simplified view of exemplary arrangements and spatial configurations of photodiodes for detectors **106**. As shown, detectors **106** may comprise photodiode detectors 1-4 that are arranged in a grid pattern on detector submount **1200** to capture light at different quadrants from measurement site **102**.

As noted, other patterns of photodiodes may also be employed in embodiments of the present disclosure, including, for example, stacked or other configurations recognizable to an artisan from the disclosure herein. For example, detectors **106** may be arranged in a linear array, a logarithmic array, a two-dimensional array, and the like. Furthermore, an artisan will recognize from the disclosure herein that any number of detectors **106** may be employed by embodiments of the present disclosure.

For example, as shown in FIG. **12**B, detectors **106** may comprise photodiode detectors 1-4 that are arranged in a substantially linear configuration on submount **1200**. In this embodiment shown, photodiode detectors 1-4 are substantially equally spaced apart (e.g., where the distance D is substantially the same between detectors 1-4).

In FIG. **12**C, photodiode detectors 1-4 may be arranged in a substantially linear configuration on submount **1200**, but may employ a substantially progressive, substantially logarithmic, or substantially semi-logarithmic spacing (e.g., where distances D**1**>D**2**>D**3**). This arrangement or pattern may be useful for use on a patient's finger and where the thickness of the finger gradually increases.

In FIG. **12**D, a different substantially grid pattern on submount **1200** of photodiode detectors 1-4 is shown. As noted, other patterns of detectors may also be employed in embodiments of the present invention.

FIGS. **12**E through **12**H illustrate several embodiments of photodiodes that may be used in detectors **106**. As shown in these figures, a photodiode **1202** of detector **106** may comprise a plurality of active areas **1204**. These active areas

204 may be coupled together via a common cathode **1206** or anode **1208** in order to provide a larger effective detection area.

In particular, as shown in FIG. **12**E, photodiode **1202** may comprise two (2) active areas **1204***a* and **1204***b*. In FIG. **12**F, photodiode **1202** may comprise four (4) active areas **1204***c-f*. In FIG. **12**G, photodiode **1202** may comprise three (3) active areas **1204***g-i*. In FIG. **12**H, photodiode **1202** may comprise nine (9) active areas **1204***j-r*. The use of smaller active areas may be useful because smaller active areas can be easier to fabricate and can be fabricated with higher purity. However, one skilled in the art will recognize that various sizes of active areas may be employed in the photodiode **1202**.

FIG. **13** illustrates an example multi-stream process **1300**. The multi-stream process **1300** can be implemented by the data collection system **100** and/or by any of the sensors described above. As shown, a control signal from a signal processor **1310** controls a driver **1305**. In response, an emitter **1304** generates a pulse sequence **1303** from its emitter (e.g., its LEDs) into a measurement site or sites **1302**. As described above, in some embodiments, the pulse sequence **1303** is controlled to have a variation of about 10 parts per million or less. Of course, depending on the analyte desired, the tolerated variation in the pulse sequence **1303** can be greater (or smaller).

In response to the pulse sequence **1300**, detectors 1 to n (n being an integer) in a detector **1306** capture optical radiation from the measurement site **1302** and provide respective streams of output signals. Each signal from one of detectors 1-n can be considered a stream having respective time slots corresponding to the optical pulses from emitter sets 1-n in the emitter **1304**. Although n emitters and n detectors are shown, the number of emitters and detectors need not be the same in certain implementations.

A front end interface **1308** can accept these multiple streams from detectors 1-n and deliver one or more signals or composite signal(s) back to the signal processor **1310**. A stream from the detectors 1-n can thus include measured light intensities corresponding to the light pulses emitted from the emitter **1304**.

The signal processor **1310** can then perform various calculations to measure the amount of glucose and other analytes based on these multiple streams of signals. In order to help explain how the signal processor **1310** can measure analytes like glucose, a primer on the spectroscopy employed in these embodiments will now be provided.

Spectroscopy is premised upon the Beer-Lambert law. According to this law, the properties of a material, e.g., glucose present in a measurement site, can be deterministically calculated from the absorption of light traveling through the material. Specifically, there is a logarithmic relation between the transmission of light through a material and the concentration of a substance and also between the transmission and the length of the path traveled by the light. As noted, this relation is known as the Beer-Lambert law.

The Beer-Lambert law is usually written as:

Absorbance A=m*b*c, where:

m is the wavelength-dependent molar absorptivity coefficient (usually expressed in units of M^{-1} cm^{-1});

b is the mean path length; and

c is the analyte concentration (e.g., the desired parameter).

In spectroscopy, instruments attempt to obtain the analyte concentration (c) by relating absorbance (A) to transmittance (T). Transmittance is a proportional value defined as:

$$T=I/I_o, \text{ where:}$$

I is the light intensity measured by the instrument from the measurement site; and

I_o is the initial light intensity from the emitter.

Absorbance (A) can be equated to the transmittance (T) by the equation:

$$A=-\log T$$

Therefore, substituting equations from above:

$$A=-\log(I/I_o)$$

In view of this relationship, spectroscopy thus relies on a proportional-based calculation of $-\log(I/I_o)$ and solving for analyte concentration (c).

Typically, in order to simplify the calculations, spectroscopy will use detectors that are at the same location in order to keep the path length (b) a fixed, known constant. In addition, spectroscopy will employ various mechanisms to definitively know the transmission power (I_o), such as a photodiode located at the light source. This architecture can be viewed as a single channel or single stream sensor, because the detectors are at a single location.

However, this scheme can encounter several difficulties in measuring analytes, such as glucose. This can be due to the high overlap of absorption of light by water at the wavelengths relevant to glucose as well as other factors, such as high self-noise of the components.

Embodiments of the present disclosure can employ a different approach that in part allows for the measurement of analytes like glucose. Some embodiments can employ a bulk, non-pulsatile measurement in order to confirm or validate a pulsatile measurement. In addition, both the non-pulsatile and pulsatile measurements can employ, among other things, the multi-stream operation described above in order to attain sufficient SNR. In particular, a single light source having multiple emitters can be used to transmit light to multiple detectors having a spatial configuration.

A single light source having multiple emitters can allow for a range of wavelengths of light to be used. For example, visible, infrared, and near infrared wavelengths can be employed. Varying powers of light intensity for different wavelengths can also be employed.

Secondly, the use of multiple-detectors in a spatial configuration allow for a bulk measurement to confirm or validate that the sensor is positioned correctly. This is because the multiple locations of the spatial configuration can provide, for example, topology information that indicates where the sensor has been positioned. Currently available sensors do not provide such information. For example, if the bulk measurement is within a predetermined range of values, then this can indicate that the sensor is positioned correctly in order to perform pulsatile measurements for analytes like glucose. If the bulk measurement is outside of a certain range or is an unexpected value, then this can indicate that the sensor should be adjusted, or that the pulsatile measurements can be processed differently to compensate, such as using a different calibration curve or adjusting a calibration curve. This feature and others allow the embodiments to achieve noise cancellation and noise reduction, which can be several times greater in magnitude that what is achievable by currently available technology.

In order to help illustrate aspects of the multi-stream measurement approach, the following example derivation is provided. Transmittance (T) can be expressed as:

$$T=e^{-m*b*c}$$

In terms of light intensity, this equation can also be rewritten as:

$$I/I_o=e^{-m*b*c}$$

Or, at a detector, the measured light (I) can be expressed as:

$$I=I_o*e^{-m*b*c}$$

As noted, in the present disclosure, multiple detectors (1 to n) can be employed, which results in $I_1 \ldots I_n$ streams of measurements. Assuming each of these detectors have their own path lengths, $b_1 \ldots b_n$, from the light source, the measured light intensities can be expressed as:

$$I_n=I_o*e^{-m*b_n*c}$$

The measured light intensities at any two different detectors can be referenced to each other. For example:

$$I_1/I_n=(I_o*e^{-mb_1c})/(I_o*e^{-mb_nc})$$

As can be seen, the terms, I_o, cancel out and, based on exponent algebra, the equation can be rewritten as:

$$I_1/I_n=e^{-m(b_1-b_n)c}$$

From this equation, the analyte concentration (c) can now be derived from bulk signals $I_1 \ldots I_n$ and knowing the respective mean path lengths b_1 and b_n. This scheme also allows for the cancelling out of I_o, and thus, noise generated by the emitter **1304** can be cancelled out or reduced. In addition, since the scheme employs a mean path length difference, any changes in mean path length and topological variations from patient to patient are easily accounted. Furthermore, this bulk-measurement scheme can be extended across multiple wavelengths. This flexibility and other features allow embodiments of the present disclosure to measure blood analytes like glucose.

For example, as noted, the non-pulsatile, bulk measurements can be combined with pulsatile measurements to more accurately measure analytes like glucose. In particular, the non-pulsatile, bulk measurement can be used to confirm or validate the amount of glucose, protein, etc. in the pulsatile measurements taken at the tissue at the measurement site(s) **1302**. The pulsatile measurements can be used to measure the amount of glucose, hemoglobin, or the like that is present in the blood. Accordingly, these different measurements can be combined to thus determine analytes like blood glucose.

FIG. **14**A illustrates an embodiment of a detector submount **1400***a* positioned beneath the partially cylindrical protrusion **605** of FIG. **6** (or alternatively, the protrusion **605***b*). The detector submount **1400***a* includes two rows **1408***a* of detectors **1410***a*. The partially cylindrical protrusion **605** can facilitate reducing the number and/or size of detectors used in a sensor because the protrusion **605** can act as a lens that focuses light onto a smaller area.

To illustrate, in some sensors that do not include the partially cylindrical protrusion **605**, sixteen detectors can be used, including four rows of four detectors each. Multiple rows of detectors can be used to measure certain analytes, such as glucose or total hemoglobin, among others. Multiple rows of detectors can also be used to detect light piping (e.g., light that bypasses the measurement site). However, using more detectors in a sensor can add cost, complexity, and noise to the sensor.

Applying the partially cylindrical protrusion **605** to such a sensor, however, could reduce the number of detectors or rows of detectors used while still receiving the substantially same amount of light, due to the focusing properties of the protrusion **605** (see FIG. **14**B). This is the example situation illustrated in FIG. **14**—two rows **1408***a* of detectors **1410***a* are used instead of four. Advantageously, in certain embodiments, the resulting sensor can be more cost effective, have less complexity, and have an improved SNR, due to fewer and/or smaller photodiodes.

In other embodiments, using the partially cylindrical protrusion **605** can allow the number of detector rows to be reduced to one or three rows of four detectors. The number of detectors in each row can also be reduced. Alternatively, the number of rows might not be reduced but the size of the detectors can be reduced. Many other configurations of detector rows and sizes can also be provided.

FIG. **14**B depicts a front elevation view of the partially cylindrical protrusion **605** (or alternatively, the protrusion **605***b*) that illustrates how light from emitters (not shown) can be focused by the protrusion **605** onto detectors. The protrusion **605** is placed above a detector submount **1400***b* having one or more detectors **1410***b* disposed thereon. The submount **1400***b* can include any number of rows of detectors **1410**, although one row is shown.

Light, represented by rays **1420**, is emitted from the emitters onto the protrusion **605**. These light rays **1420** can be attenuated by body tissue (not shown). When the light rays **1420** enter the protrusion **605**, the protrusion **605** acts as a lens to refract the rays into rays **1422**. This refraction is caused in certain embodiments by the partially cylindrical shape of the protrusion **605**. The refraction causes the rays **1422** to be focused or substantially focused on the one or more detectors **1410***b*. Since the light is focused on a smaller area, a sensor including the protrusion **605** can include fewer detectors to capture the same amount of light compared with other sensors.

FIG. **14**C illustrates another embodiment of a detector submount **1400***c*, which can be disposed under the protrusion **605***b* (or alternatively, the protrusion **605**). The detector submount **1400***c* includes a single row **1408***c* of detectors **1410***c*. The detectors are electrically connected to conductors **1412***c*, which can be gold, silver, copper, or any other suitable conductive material.

The detector submount **1400***c* is shown positioned under the protrusion **605***b* in a detector subassembly **1450** illustrated in FIG. **14**D. A top-down view of the detector subassembly **1450** is also shown in FIG. **14**E. In the detector subassembly **1450**, a cylindrical housing **1430** is disposed on the submount **1400***c*. The cylindrical housing **1430** includes a transparent cover **1432**, upon which the protrusion **605***b* is disposed. Thus, as shown in FIG. **14**D, a gap **1434** exists between the detectors **1410***c* and the protrusion **605***b*. The height of this gap **1434** can be chosen to increase or maximize the amount of light that impinges on the detectors **1410***c*.

The cylindrical housing **1430** can be made of metal, plastic, or another suitable material. The transparent cover **1432** can be fabricated from glass or plastic, among other materials. The cylindrical housing **1430** can be attached to the submount **1400***c* at the same time or substantially the same time as the detectors **1410***c* to reduce manufacturing costs. A shape other than a cylinder can be selected for the housing **1430** in various embodiments.

In certain embodiments, the cylindrical housing **1430** (and transparent cover **1432**) forms an airtight or substantially airtight or hermetic seal with the submount **1400***c*. As a result, the cylindrical housing **1430** can protect the detectors **1410***c* and conductors **1412***c* from fluids and vapors that can cause corrosion. Advantageously, in certain embodiments, the cylindrical housing **1430** can protect the detectors **1410***c* and conductors **1412***c* more effectively than cur-

rently-available resin epoxies, which are sometimes applied to solder joints between conductors and detectors.

In embodiments where the cylindrical housing **1430** is at least partially made of metal, the cylindrical housing **1430** can provide noise shielding for the detectors **1410***c*. For example, the cylindrical housing **1430** can be soldered to a ground connection or ground plane on the submount **1400***c*, which allows the cylindrical housing **1430** to reduce noise. In another embodiment, the transparent cover **1432** can include a conductive material or conductive layer, such as conductive glass or plastic. The transparent cover **1432** can include any of the features of the noise shields **790** described above.

The protrusion **605***b* includes the chamfered edges **607** described above with respect to FIG. **6**E. These chamfered edges **607** can allow a patient to more comfortably slide a finger over the protrusion **605***b* when inserting the finger into the sensor **301***f*.

FIG. **14**F illustrates a portion of the detector shell **306***f*, which includes the detectors **1410***c* on the substrate **1400***c*. The substrate **1400***c* is enclosed by a shielding enclosure **1490**, which can include the features of the shielding enclosures **790***a*, **790***b* described above (see also FIG. **17**). The shielding enclosure **1490** can be made of metal. The shielding enclosure **1490** includes a window **1492***a* above the detectors **1410***c*, which allows light to be transmitted onto the detectors **1410***c*.

A noise shield **1403** is disposed above the shielding enclosure **1490**. The noise shield **1403**, in the depicted embodiment, includes a window **1492***a* corresponding to the window **1492***a*. Each of the windows **1492***a*, **1492***b* can include glass, plastic, or can be an opening without glass or plastic. In some embodiments, the windows **1492***a*, **1492***b* may be selected to have different sizes or shapes from each other.

The noise shield **1403** can include any of the features of the conductive glass described above. In the depicted embodiment, the noise shield **1403** extends about three-quarters of the length of the detector shell **306***f*. In other embodiments, the noise shield **1403** could be smaller or larger. The noise shield **1403** could, for instance, merely cover the detectors **1410***c*, the submount **1400***c*, or a portion thereof. The noise shield **1403** also includes a stop **1413** for positioning a measurement site within the sensor **301***f*. Advantageously, in certain embodiments, the noise shield **1403** can reduce noise caused by light piping.

A thermistor **1470** is also shown. The thermistor **1470** is attached to the submount **1400***c* and protrudes above the noise shield **1403**. As described above, the thermistor **1470** can be employed to measure a temperature of a measurement site. Such a temperature can be helpful in correcting for wavelength drift due to changes in water absorption, which can be temperature dependent, thereby providing more accurate data useful in detecting blood analytes like glucose.

In the depicted embodiment, the detectors **1410***c* are not enclosed in the cylindrical housing **1430**. In an alternative embodiment, the cylindrical housing **1430** encloses the detectors **1410***c* and is disposed under the noise shield **1403**. In another embodiment, the cylindrical housing **1430** encloses the detectors **1410***c* and the noise shield **1403** is not used. If both the cylindrical housing **1403** and the noise shield **1403** are used, either or both can have noise shielding features.

FIG. **14**G illustrates the detector shell **306***f* of FIG. **14**F, with the finger bed **310***f* disposed thereon. FIG. **14**H illustrates the detector shell **306***f* of FIG. **14**G, with the protrusion **605***b* disposed in the finger bed **310***f*.

FIG. **14**I illustrates a cutaway view of the sensor **301***f*. Not all features of the sensor **301***f* are shown, such as the protrusion **605***b*. Features shown include the emitter and detector shells **304***f*, **306***f*, the flaps **307***f*, the heat sink **350***f* and fins **351***f*, the finger bed **310***f*, and the noise shield **1403**.

In addition to these features, emitters **1404** are depicted in the emitter shell **304***f*. The emitters **1404** are disposed on a submount **1401**, which is connected to a circuit board **1419**. The emitters **1404** are also enclosed within a cylindrical housing **1480**. The cylindrical housing **1480** can include all of the features of the cylindrical housing **1430** described above. For example, the cylindrical housing **1480** can be made of metal, can be connected to a ground plane of the submount **1401** to provide noise shielding, and can include a transparent cover **1482**.

The cylindrical housing **1480** can also protect the emitters **1404** from fluids and vapors that can cause corrosion. Moreover, the cylindrical housing **1480** can provide a gap between the emitters **1404** and the measurement site (not shown), which can allow light from the emitters **1404** to even out or average out before reaching the measurement site.

The heat sink **350***f*, in addition to including the fins **351***f*, includes a protuberance **352***f* that extends down from the fins **351***f* and contacts the submount **1401**. The protuberance **352***f* can be connected to the submount **1401**, for example, with thermal paste or the like. The protuberance **352***f* can sink heat from the emitters **1404** and dissipate the heat via the fins **351***f*.

FIGS. **15**A and **15**B illustrate embodiments of sensor portions **1500**A, **15008** that include alternative heat sink features to those described above. These features can be incorporated into any of the sensors described above. For example, any of the sensors above can be modified to use the heat sink features described below instead of or in addition to the heat sink features of the sensors described above.

The sensor portions **1500**A, **1500**B shown include LED emitters **1504**; however, for ease of illustration, the detectors have been omitted. The sensor portions **1500**A, **1500**B shown can be included, for example, in any of the emitter shells described above.

The LEDs **1504** of the sensor portions **1500**A, **1500**B are connected to a substrate or submount **1502**. The submount **1502** can be used in place of any of the submounts described above. The submount **1502** can be a non-electrically conducting material made of any of a variety of materials, such as ceramic, glass, or the like. A cable **1512** is attached to the submount **1502** and includes electrical wiring **1514**, such as twisted wires and the like, for communicating with the LEDs **1504**. The cable **1512** can correspond to the cables **212** described above.

Although not shown, the cable **1512** can also include electrical connections to a detector. Only a portion of the cable **1512** is shown for clarity. The depicted embodiment of the cable **1512** includes an outer jacket **1510** and a conductive shield **1506** disposed within the outer jacket **1510**. The conductive shield **1506** can be a ground shield or the like that is made of a metal such as braided copper or aluminum. The conductive shield **1506** or a portion of the conductive shield **1506** can be electrically connected to the submount **1502** and can reduce noise in the signal generated by the sensor **1500**A, **15008** by reducing RF coupling with the wires **1514**. In alternative embodiments, the cable **1512** does not have a conductive shield. For example, the cable **1512**

Masimo Ex. 1041
IPR Petition - US D962,936

could be a twisted pair cable or the like, with one wire of the twisted pair used as a heat sink.

Referring specifically to FIG. **15**A, in certain embodiments, the conductive shield **1506** can act as a heat sink for the LEDs **1504** by absorbing thermal energy from the LEDs **1504** and/or the submount **1502**. An optional heat insulator **1520** in communication with the submount **1502** can also assist with directing heat toward the conductive shield **1506**. The heat insulator **1520** can be made of plastic or another suitable material. Advantageously, using the conductive shield **1506** in the cable **1512** as a heat sink can, in certain embodiments, reduce cost for the sensor.

Referring to FIG. **15**B, the conductive shield **1506** can be attached to both the submount **1502** and to a heat sink layer **1530** sandwiched between the submount **1502** and the optional insulator **1520**. Together, the heat sink layer **1530** and the conductive shield **1506** in the cable **1512** can absorb at least part of the thermal energy from the LEDs and/or the submount **1502**.

FIGS. **15**C and **15**D illustrate implementations of a sensor portion **1500**C that includes the heat sink features of the sensor portion **1500**A described above with respect to FIG. **15**A. The sensor portion **1500**C includes the features of the sensor portion **1500**A, except that the optional insulator **1520** is not shown. FIG. **15**D is a side cutaway view of the sensor portion **1500**C that shows the emitters **1504**.

The cable **1512** includes the outer jacket **1510** and the conductive shield **1506**. The conductive shield **1506** is soldered to the submount **1502**, and the solder joint **1561** is shown. In some embodiments, a larger solder joint **1561** can assist with removing heat more rapidly from the emitters **1504**. Various connections **1563** between the submount **1502** and a circuit board **1519** are shown. In addition, a cylindrical housing **1580**, corresponding to the cylindrical housing **1480** of FIG. **14**I, is shown protruding through the circuit board **1519**. The emitters **1504** are enclosed in the cylindrical housing **1580**.

FIGS. **15**E and **15**F illustrate implementations of a sensor portion **1500**E that includes the heat sink features of the sensor portion **1500**B described above with respect to FIG. **15**B. The sensor portion **1500**E includes the heat sink layer **1530**. The heat sink layer **1530** can be a metal plate, such as a copper plate or the like. The optional insulator **1520** is not shown. FIG. **15**F is a side cutaway view of the sensor portion **1500**E that shows the emitters **1504**.

In the depicted embodiment, the conductive shield **1506** of the cable **1512** is soldered to the heat sink layer **1530** instead of the submount **1502**. The solder joint **1565** is shown. In some embodiments, a larger solder joint **1565** can assist with removing heat more rapidly from the emitters **1504**. Various connections **1563** between the submount **1502** and a circuit board **1519** are shown. In addition, the cylindrical housing **1580** is shown protruding through the circuit board **1519**. The emitters **1504** are enclosed in the cylindrical housing **1580**.

FIGS. **15**G and **15**H illustrate embodiments of connector features that can be used with any of the sensors described above with respect to FIGS. **1** through **15**F. Referring to FIG. **15**G, the circuit board **1519** includes a female connector **1575** that mates with a male connector **1577** connected to a daughter board **1587**. The daughter board **1587** includes connections to the electrical wiring **1514** of the cable **1512**. The connected boards **1519**, **1587** are shown in FIG. **15**H. Also shown is a hole **1573** that can receive the cylindrical housing **1580** described above.

Advantageously, in certain embodiments, using a daughter board **1587** to connect to the circuit board **1519** can enable connections to be made more easily to the circuit board **1519**. In addition, using separate boards can be easier to manufacture than a single circuit board **1519** with all connections soldered to the circuit board **1519**.

FIG. **15**I illustrates an exemplary architecture for front-end interface **108** as a transimpedance-based front-end. As noted, front-end interfaces **108** provide an interface that adapts the output of detectors **106** into a form that can be handled by signal processor **110**. As shown in this figure, sensor **101** and front-end interfaces **108** may be integrated together as a single component, such as an integrated circuit. Of course, one skilled in the art will recognize that sensor **101** and front end interfaces **108** may comprise multiple components or circuits that are coupled together.

Front-end interfaces **108** may be implemented using transimpedance amplifiers that are coupled to analog to digital converters in a sigma delta converter. In some embodiments, a programmable gain amplifier (PGA) can be used in combination with the transimpedance-based front-ends. For example, the output of a transimpedance-based front-end may be output to a sigma-delta ADC that comprises a PGA. A PGA may be useful in order to provide another level of amplification and control of the stream of signals from detectors **106**. The PGA may be an integrated circuit or built from a set of micro-relays. Alternatively, the PGA and ADC components in converter **900** may be integrated with the transimpedance-based front-end in sensor **101**.

Due to the low-noise requirements for measuring blood analytes like glucose and the challenge of using multiple photodiodes in detector **106**, the applicants developed a noise model to assist in configuring front-end **108**. Conventionally, those skilled in the art have focused on optimizing the impedance of the transimpedance amplifiers to minimize noise.

However, the following noise model was discovered by the applicants:

$$\text{Noise}=\sqrt{aR+bR^2}, \text{ where:}$$

aR is characteristic of the impedance of the transimpedance amplifier; and

bR^2 is characteristic of the impedance of the photodiodes in detector and the number of photodiodes in detector **106**.

The foregoing noise model was found to be helpful at least in part due to the high SNR required to measure analytes like glucose. However, the foregoing noise model was not previously recognized by artisans at least in part because, in conventional devices, the major contributor to noise was generally believed to originate from the emitter or the LEDs. Therefore, artisans have generally continued to focus on reducing noise at the emitter.

However, for analytes like glucose, the discovered noise model revealed that one of the major contributors to noise was generated by the photodiodes. In addition, the amount of noise varied based on the number of photodiodes coupled to a transimpedance amplifier. Accordingly, combinations of various photodiodes from different manufacturers, different impedance values with the transimpedance amplifiers, and different numbers of photodiodes were tested as possible embodiments.

In some embodiments, different combinations of transimpedance to photodiodes may be used. For example, detectors 1-4 (as shown, e.g., in FIG. **12**A) may each comprise four photodiodes. In some embodiments, each detector of four photodiodes may be coupled to one or more transimpedance amplifiers. The configuration of these amplifiers may be set according to the model shown in FIG. **15**J.

Masimo Ex. 1041
IPR Petition - US D962,936

Alternatively, each of the photodiodes may be coupled to its own respective transimpedance amplifier. For example, transimpedance amplifiers may be implemented as integrated circuits on the same circuit board as detectors 1-4. In this embodiment, the transimpedance amplifiers may be grouped into an averaging (or summing) circuit, which are known to those skilled in the art, in order to provide an output stream from the detector. The use of a summing amplifier to combine outputs from several transimpedance amplifiers into a single, analog signal may be helpful in improving the SNR relative to what is obtainable from a single transimpedance amplifier. The configuration of the transimpedance amplifiers in this setting may also be set according to the model shown in FIG. **15**J.

As yet another alternative, as noted above with respect to FIGS. **12**E through **12**H, the photodiodes in detectors **106** may comprise multiple active areas that are grouped together. In some embodiments, each of these active areas may be provided its own respective transimpedance. This form of pairing may allow a transimpedance amplifier to be better matched to the characteristics of its corresponding photodiode or active area of a photodiode.

As noted, FIG. **15**J illustrates an exemplary noise model that may be useful in configuring transimpedance amplifiers. As shown, for a given number of photodiodes and a desired SNR, an optimal impedance value for a transimpedance amplifier could be determined.

For example, an exemplary "4 PD per stream" sensor **1502** is shown where detector **106** comprises four photodiodes **1502**. The photodiodes **1502** are coupled to a single transimpedance amplifier **1504** to produce an output stream **1506**. In this example, the transimpedance amplifier comprises 10 MO resistors **1508** and **1510**. Thus, output stream **1506** is produced from the four photodiodes (PD) **1502**. As shown in the graph of FIG. **15**J, the model indicates that resistance values of about 10 MO may provide an acceptable SNR for analytes like glucose.

However, as a comparison, an exemplary "1 PD per stream" sensor **1512** is also shown in FIG. **15**J. In particular, sensor **1512** may comprise a plurality of detectors **106** that each comprises a single photodiode **1514**. In addition, as shown for this example configuration, each of photodiodes **1514** may be coupled to respective transimpedance amplifiers **1516**, e.g., 1 PD per stream. Transimpedance amplifiers are shown having 40 MΩ resistors **1518**. As also shown in the graph of FIG. **15**J, the model illustrates that resistance values of 40 MΩ for resistors **1518** may serve as an alternative to the 4 photodiode per stream architecture of sensor **1502** described above and yet still provide an equivalent SNR.

Moreover, the discovered noise model also indicates that utilizing a 1 photodiode per stream architecture like that in sensor **1512** may provide enhanced performance because each of transimpedance amplifiers **1516** can be tuned or optimized to its respective photodiodes **1518**. In some embodiments, an averaging component **1520** may also be used to help cancel or reduce noise across photodiodes **1518**.

For purposes of illustration, FIG. **15**K shows different architectures (e.g., four PD per stream and one PD per stream) for various embodiments of a sensor and how components of the sensor may be laid out on a circuit board or substrate. For example, sensor **1522** may comprise a "4 PD per stream" architecture on a submount **700** in which each detector **106** comprises four (4) photodiodes **1524**. As shown for sensor **1522**, the output of each set of four photodiodes **1524** is then aggregated into a single transimpedance amplifier **1526** to produce a signal.

As another example, a sensor **1528** may comprise a "1 PD per stream" architecture on submount **700** in which each detector **106** comprises four (4) photodiodes **1530**. In sensor **1528**, each individual photodiode **1530** is coupled to a respective transimpedance amplifier **1532**. The output of the amplifiers **1532** may then be aggregated into averaging circuit **1520** to produce a signal.

As noted previously, one skilled in the art will recognize that the photodiodes and detectors may be arranged in different fashions to optimize the detected light. For example, sensor **1534** illustrates an exemplary "4 PD per stream" sensor in which the detectors **106** comprise photodiodes **1536** arranged in a linear fashion. Likewise, sensor **1538** illustrates an exemplary "1 PD per stream" sensor in which the detectors comprise photodiodes **1540** arranged in a linear fashion.

Alternatively, sensor **1542** illustrates an exemplary "4 PD per stream" sensor in which the detectors **106** comprise photodiodes **1544** arranged in a two-dimensional pattern, such as a zig-zag pattern. Sensor **1546** illustrates an exemplary "1 PD per stream" sensor in which the detectors comprise photodiodes **1548** also arranged in a zig-zag pattern.

FIG. **15**L illustrates an exemplary architecture for a switched-capacitor-based front-end. As shown, front-end interfaces **108** may be implemented using switched capacitor circuits and any number of front-end interfaces **108** may be implemented. The output of these switched capacitor circuits may then be provided to a digital interface **1000** and signal processor **110**. Switched capacitor circuits may be useful in system **100** for their resistor free design and analog averaging properties. In particular, the switched capacitor circuitry provides for analog averaging of the signal that allows for a lower smaller sampling rate (e.g., 2 KHz sampling for analog versus 48 KHz sampling for digital designs) than similar digital designs. In some embodiments, the switched capacitor architecture in front end interfaces **108** may provide a similar or equivalent SNR to other front end designs, such as a sigma delta architecture. In addition, a switched capacitor design in front end interfaces **108** may require less computational power by signal processor **110** to perform the same amount of decimation to obtain the same SNR.

FIGS. **16**A and **16**B illustrate embodiments of disposable optical sensors **1600**. In an embodiment, any of the features described above, such as protrusion, shielding, and/or heat sink features, can be incorporated into the disposable sensors **1600** shown. For instance, the sensors **1600** can be used as the sensors **101** in the system **100** described above with respect to FIG. **1**. Moreover, any of the features described above, such as protrusion, shielding, and/or heat sink features, can be implemented in other disposable sensor designs that are not depicted herein.

The sensors **1600** include an adult/pediatric sensor **1610** for finger placement and a disposable infant/neonate sensor **1602** configured for toe, foot or hand placement. Each sensor **1600** has a tape end **1610** and an opposite connector end **1620** electrically and mechanically interconnected via a flexible coupling **1630**. The tape end **1610** attaches an emitter and detector to a tissue site. Although not shown, the tape end **1610** can also include any of the protrusion, shielding, and/or heat sink features described above. The emitter illuminates the tissue site and the detector generates a sensor signal responsive to the light after tissue absorption, such as absorption by pulsatile arterial blood flow within the tissue site.

The sensor signal is communicated via the flexible coupling **1630** to the connector end **1620**. The connector end **1620** can mate with a cable (not shown) that communicates the sensor signal to a monitor (not shown), such as any of the cables or monitors shown above with respect to FIGS. **2**A through **2**D. Alternatively, the connector end **1620** can mate directly with the monitor.

FIG. **17** illustrates an exploded view of certain of the components of the sensor **301***f* described above. A heat sink **1751** and a cable **1781** attach to an emitter shell **1704**. The emitter shell attaches to a flap housing **1707**. The flap housing **1707** includes a receptacle **1709** to receive a cylindrical housing **1480**/**1580** (not shown) attached to an emitter submount **1702**, which is attached to a circuit board **1719**.

A spring **1787** attaches to a detector shell **1706** via pins **1783**, **1785**, which hold the emitter and detector shells **1704**, **1706** together. A support structure **1791** attaches to the detector shell **1706**, which provides support for a shielding enclosure **1790**. A noise shield **1713** attaches to the shielding enclosure **1790**. A detector submount **1700** is disposed inside the shielding enclosure **1790**. A finger bed **1710** provides a surface for placement of the patient's finger. Finger bed **1710** may comprise a gripping surface or gripping features, which may assist in placing and stabilizing a patient's finger in the sensor. A partially cylindrical protrusion **1705** may also be disposed in the finger bed **1710**. As shown, finger bed **1710** attaches to the noise shield **1703**. The noise shield **1703** may be configured to reduce noise, such as from ambient light and electromagnetic noise. For example, the noise shield **1703** may be constructed from materials having an opaque color, such as black or a dark blue, to prevent light piping.

Noise shield **1703** may also comprise a thermistor **1712**. The thermistor **1712** may be helpful in measuring the temperature of a patient's finger. For example, the thermistor **1712** may be useful in detecting when the patient's finger is reaching an unsafe temperature that is too hot or too cold. In addition, the temperature of the patient's finger may be useful in indicating to the sensor the presence of low perfusion as the temperature drops. In addition, the thermistor **1712** may be useful in detecting a shift in the characteristics of the water spectrum in the patient's finger, which can be temperature dependent.

Moreover, a flex circuit cover **1706** attaches to the pins **1783**, **1785**. Although not shown, a flex circuit can also be provided that connects the circuit board **1719** with the submount **1700** (or a circuit board to which the submount **1700** is connected). A flex circuit protector **1760** may be provided to provide a barrier or shield to the flex circuit (not shown). In particular, the flex circuit protector **1760** may also prevent any electrostatic discharge to or from the flex circuit. The flex circuit protector **1760** may be constructed from well known materials, such as a plastic or rubber materials.

FIG. **18** shows the results obtained by an exemplary sensor **101** of the present disclosure that was configured for measuring glucose. This sensor **101** was tested using a pure water ex-vivo sample. In particular, ten samples were prepared that ranged from 0-55 mg/dL. Two samples were used as a training set and eight samples were then used as a test population. As shown, embodiments of the sensor **101** were able to obtain at least a standard deviation of 13 mg/dL in the training set and 11 mg/dL in the test population.

FIG. **19** shows the results obtained by an exemplary sensor **101** of the present disclosure that was configured for measuring glucose. This sensor **101** was tested using a turbid ex-vivo sample. In particular, 25 samples of water/glucose/Liposyn were prepared that ranged from 0-55 mg/dL. Five samples were used as a training set and 20 samples were then used as a test population. As shown, embodiments of sensor **101** were able to obtain at least a standard deviation of 37 mg/dL in the training set and 32 mg/dL in the test population.

FIGS. **20** through **22** shows other results that can be obtained by an embodiment of system **100**. In FIG. **20**, 150 blood samples from two diabetic adult volunteers were collected over a 10-day period. Invasive measurements were taken with a YSI glucometer to serve as a reference measurement. Noninvasive measurements were then taken with an embodiment of system **100** that comprised four LEDs and four independent detector streams. As shown, the system **100** obtained a correlation of about 85% and Arms of about 31 mg/dL.

In FIG. **21**, 34 blood samples were taken from a diabetic adult volunteer collected over a 2-day period. Invasive measurements were also taken with a glucometer for comparison. Noninvasive measurements were then taken with an embodiment of system **100** that comprised four LEDs in emitter **104** and four independent detector streams from detectors **106**. As shown, the system **100** was able to attain a correlation of about 90% and Arms of about 22 mg/dL.

The results shown in FIG. **22** relate to total hemoglobin testing with an exemplary sensor **101** of the present disclosure. In particular, 47 blood samples were collected from nine adult volunteers. Invasive measurements were then taken with a CO-oximeter for comparison. Noninvasive measurements were taken with an embodiment of system **100** that comprised four LEDs in emitter **104** and four independent detector channels from detectors **106**. Measurements were averaged over 1 minute. As shown, the testing resulted in a correlation of about 93% and Arms of about 0.8 mg/dL.

Conditional language used herein, such as, among others, "can," "could," "might," "may," "e.g.," and the like, unless specifically stated otherwise, or otherwise understood within the context as used, is generally intended to convey that certain embodiments include, while other embodiments do not include, certain features, elements and/or states. Thus, such conditional language is not generally intended to imply that features, elements and/or states are in any way required for one or more embodiments or that one or more embodiments necessarily include logic for deciding, with or without author input or prompting, whether these features, elements and/or states are included or are to be performed in any particular embodiment.

While certain embodiments of the inventions disclosed herein have been described, these embodiments have been presented by way of example only, and are not intended to limit the scope of the inventions disclosed herein. Indeed, the novel methods and systems described herein can be embodied in a variety of other forms; furthermore, various omissions, substitutions and changes in the form of the methods and systems described herein can be made without departing from the spirit of the inventions disclosed herein. The claims and their equivalents are intended to cover such forms or modifications as would fall within the scope and spirit of certain of the inventions disclosed herein.

What is claimed is:

1. A user-worn device configured to non-invasively measure a physiological parameter of a user, the user-worn device comprising:

a first set of light emitting diodes (LEDs), the first set of LEDs comprising at least an LED configured to emit

Masimo Ex. 1041
IPR Petition - US D962,936

light at a first wavelength and an LED configured to emit light at a second wavelength;

a second set of LEDs spaced apart from the first set of LEDs, the second set of LEDs comprising at least an LED configured to emit light at the first wavelength and an LED configured to emit light at the second wavelength;

four photodiodes arranged on an interior surface of the user-worn device and configured to receive light after attenuation by tissue of the user;

a protrusion comprising:

a convex surface extending over the interior surface,

a plurality of openings in the convex surface extending through the protrusion and aligned with the four photodiodes, each opening defined by an opaque surface, and

a plurality of windows, each of the windows extending across a different one of the openings; and

one or more processors configured to receive one or more signals from at least one of the photodiodes and calculate a measurement of the physiological parameter of the user.

2. The user-worn device of claim **1**, wherein the windows comprise glass.

3. The user-worn device of claim **1**, wherein the windows comprise plastic.

4. The user-worn device of claim **1** further comprising:

a network interface configured to wirelessly communicate the measurement of the physiological parameter to at least one of: a mobile phone or a computer network;

a user interface comprising a touch-screen display, wherein the user interface is configured to display indicia responsive to the measurement of the physiological parameter;

a storage device configured to at least temporarily store at least the measurement; and

a strap configured to position the user-worn device on the user.

5. The user-worn device of claim **1**, wherein the opaque surface is configured to reduce light piping.

6. The user-worn device of claim **1** further comprising:

at least one wall extending between the interior surface and the protrusion,

wherein at least the interior surface, the wall and the protrusion form cavities, wherein the photodiodes are arranged on the interior surface within the cavities.

7. The user-worn device of claim **1**, wherein the physiological parameter comprises at least one of: methemoglobin, total hemoglobin, carboxyhemoglobin, or carbon monoxide.

8. The user-worn device of claim **1**, wherein the physiological parameter comprises oxygen or oxygen saturation.

9. The user-worn device of claim **1**, wherein the physiological parameter comprises trending information.

10. The user-worn device of claim **1** further comprising a thermistor.

11. The user-worn device of claim **1**, wherein the LEDs and the photodiodes are arranged on a same side of the tissue of the user.

12. The user-worn device of claim **1**, wherein the one or more processors are further configured to calculate a bulk measurement responsive to a positioning of the user-worn device.

13. The user-worn device of claim **1**, wherein, within each of the first and second sets of LEDs, any one LED is positioned within 2 mm to 4 mm of another.

14. The user-worn device of claim **1**, further comprising a third set of LEDs, the third set of LEDs comprising at least an LED configured to emit light at the first wavelength and an LED configured to emit light at the second wavelength.

15. The user-worn device of claim **1**, wherein the four photodiodes comprise first, second, third and fourth photodiodes and wherein the first photodiode and the second photodiode are arranged on the interior surface across from each other on opposite sides of a central point along a first axis, and the third photodiode and the fourth photodiode are arranged across from each other on opposite sides of the central point along a second axis which is different from the first axis.

16. The user-worn device of claim **1**, wherein the protrusion further comprises one or more extensions.

17. The user-worn device of claim **16**, wherein the one or more extensions surround a perimeter of the convex surface of the protrusion.

18. The user-worn device of claim **1**, wherein the protrusion further comprises one or more chamfered edges.

19. A user-worn device configured to non-invasively measure an oxygen saturation of a user, the user-worn device comprising:

a plurality of emitters configured to emit light, each of the emitters comprising at least two light emitting diodes (LEDs);

four photodiodes arranged within the user-worn device and configured to receive light after at least a portion of the light has been attenuated by tissue of the user;

a protrusion comprising a convex surface including separate openings extending through the protrusion and lined with opaque material, each opening positioned over a different one associated with each of the four photodiodes, the opaque material configured to reduce an amount of light reaching the photodiodes without being attenuated by the tissue;

optically transparent material within each of the openings; and

one or more processors configured to receive one or more signals from at least one of the four photodiodes and output measurements responsive to the one or more signals, the measurements indicative of the oxygen saturation of the user.

20. The user-worn device of claim **19** further comprising a thermistor.

21. The user-worn device of claim **20**, wherein the one or more processors are further configured to receive a temperature signal from the thermistor and adjust operation of the user-worn device responsive to the temperature signal.

22. The user-worn device of claim **21**, wherein the plurality of emitters comprise at least four emitters, and wherein each of the plurality of emitters comprises a respective set of at least three LEDs.

23. The user-worn device of claim **22**, wherein, within each respective set of at least three LEDs, the LEDs of the set are positioned within 2 mm to 4 mm of each other.

24. The user-worn device of claim **19** further comprising:

a network interface configured to wirelessly communicate at least the measurements of oxygen saturation to at least one of: a mobile phone or a computer network;

a user interface comprising a touch-screen display, wherein the user interface is configured to display indicia responsive to the measurements of oxygen saturation; and

a memory device configured to at least temporarily store at least the measurements of oxygen saturation.

25. The user-worn device of claim **19**, wherein the photodiodes comprise first, second, third and fourth photodiodes and wherein the first photodiode and the second photodiode are arranged across from each other on opposite sides of a central point along a first axis, and the third photodiode and the fourth photodiode are arranged across from each other on opposite sides of the central point along a second axis which is different from the first axis.

26. The user-worn device of claim **19**, wherein the optically transparent material is glass.

27. The user-worn device of claim **19**, wherein the optically transparent material is plastic.

28. A user-worn device configured to non-invasively measure an oxygen saturation of a user, the user-worn device comprising:

a first set of light emitting diodes (LEDs), the first set of LEDs comprising at least an LED configured to emit light at a first wavelength and an LED configured to emit light at a second wavelength;

a second set of LEDs spaced apart from the first set of LEDs, the second set of LEDs comprising at least an LED configured to emit light at the first wavelength and an LED configured to emit light at the second wavelength;

four photodiodes arranged in a quadrant configuration on an interior surface of the user-worn device and configured to receive light after at least a portion of the light has been attenuated by tissue of the user;

a thermistor configured to provide a temperature signal;

a protrusion arranged above the interior surface, the protrusion comprising:

a convex surface;

a plurality of openings in the convex surface, extending through the protrusion, and aligned with the four photodiodes, each opening defined by an opaque surface configured to reduce light piping; and

a plurality of transmissive windows, each of the transmissive windows extending across a different one of the openings;

at least one opaque wall extending between the interior surface and the protrusion, wherein at least the interior surface, the opaque wall and the protrusion form cavities, wherein the photodiodes are arranged on the interior surface within the cavities;

one or more processors configured to receive one or more signals from at least one of the photodiodes and calculate an oxygen saturation measurement of the user, the one or more processors further configured to receive the temperature signal;

a network interface configured to wirelessly communicate the oxygen saturation measurement to at least one of a mobile phone or an electronic network;

a user interface comprising a touch-screen display, wherein the user interface is configured to display indicia responsive to the oxygen saturation measurement of the user;

a storage device configured to at least temporarily store at least the measurement; and

a strap configured to position the user-worn device on the user.

29. The user-worn device of claim **28**, further comprising:

a driver configured to energize the first and second sets of LEDs; and

a front-end interface comprising one or more amplifiers and one or more analog to digital converters (ADCs), wherein the front-end interface receives the signals from the photodiodes, the one or more amplifiers amplify the signals and the one or more ADCs convert the signals to digital information, and wherein the processors receive the converted signals.

30. The user-worn device of claim **28**, wherein the protrusion further comprises one or more sidewalls extending at least partially around a perimeter of the convex surface.

* * * * *