US008719932B2

(12) **United States Patent**
Boney

(10) **Patent No.: US 8,719,932 B2**
(45) **Date of Patent: *May 6, 2014**

(54) **BACKWARDS RESEARCHING ACTIVITY INDICATIVE OF PESTWARE**

(75) Inventor: **Matthew L. Boney**, Longmont, CO (US)

(73) Assignee: **Webroot Inc.**, Broomfield, CO (US)

(*) Notice: Subject to any disclaimer, the term of this patent is extended or adjusted under 35 U.S.C. 154(b) by 142 days.

This patent is subject to a terminal disclaimer.

(21) Appl. No.: **13/490,294**

(22) Filed: **Jun. 6, 2012**

(65) **Prior Publication Data**

US 2012/0246722 A1 Sep. 27, 2012

Related U.S. Application Data

(63) Continuation of application No. 11/408,146, filed on Apr. 20, 2006, now Pat. No. 8,201,243.

(51) **Int. Cl.**
G06F 21/56 (2013.01)

(52) **U.S. Cl.**
USPC **726/22**; 713/164; 713/202; 713/188; 709/206; 709/224; 380/279; 370/386; 726/27

(58) **Field of Classification Search**
CPC H04L 63/1416; G06F 21/56
USPC 726/22
See application file for complete search history.

(56) **References Cited**

U.S. PATENT DOCUMENTS

7,490,352	B2 *	2/2009	Kramer et al.	726/22
8,312,479	B2 *	11/2012	Boillot	719/328
2005/0273858	A1 *	12/2005	Zadok et al.	726/24
2007/0016914	A1 *	1/2007	Yeap	719/328
2007/0174911	A1 *	7/2007	Kronenberg et al.	726/22
2011/0167050	A1 *	7/2011	Fanton et al.	707/698

OTHER PUBLICATIONS

The ethical and legal concerns of spyware|http://utopia.csis.pace.edu/dps/2007/jkile/2005%20-%20Spring/DCS823/Spyware/sipior.pdf|2005|Sipior et al.|pp. 39-49.*

* cited by examiner

Primary Examiner — Mahfuzur Rahman
(74) *Attorney, Agent, or Firm* — Sheridan Ross P.C.

(57) **ABSTRACT**

A system and method for researching an identity of a source of activity that is indicative of pestware is described. In one embodiment the method comprises monitoring, using a kernel-mode driver, API call activity on the computer; storing information related to the API call activity in a log; analyzing, heuristically, the API call activity to determine whether one or more weighted factors associated with the API call activity exceeds a threshold; identifying, based upon the API call activity, a suspected pestware object on the computer; identifying, in response to the identifying the suspected pestware object, a reference to an identity of an externally networked source of the suspected pestware object; and reporting the identity of the externally networked source to an externally networked pestware research entity.

15 Claims, 5 Drawing Sheets

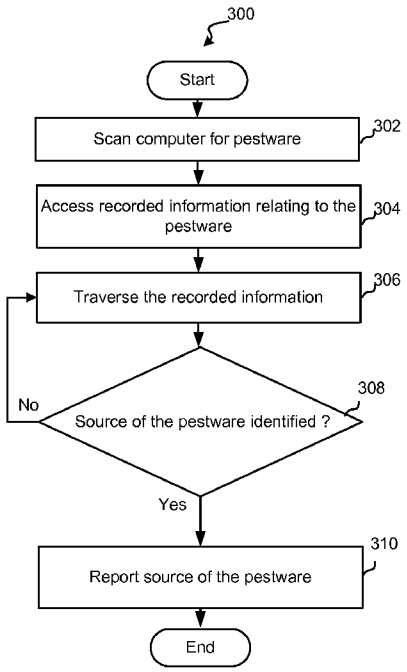

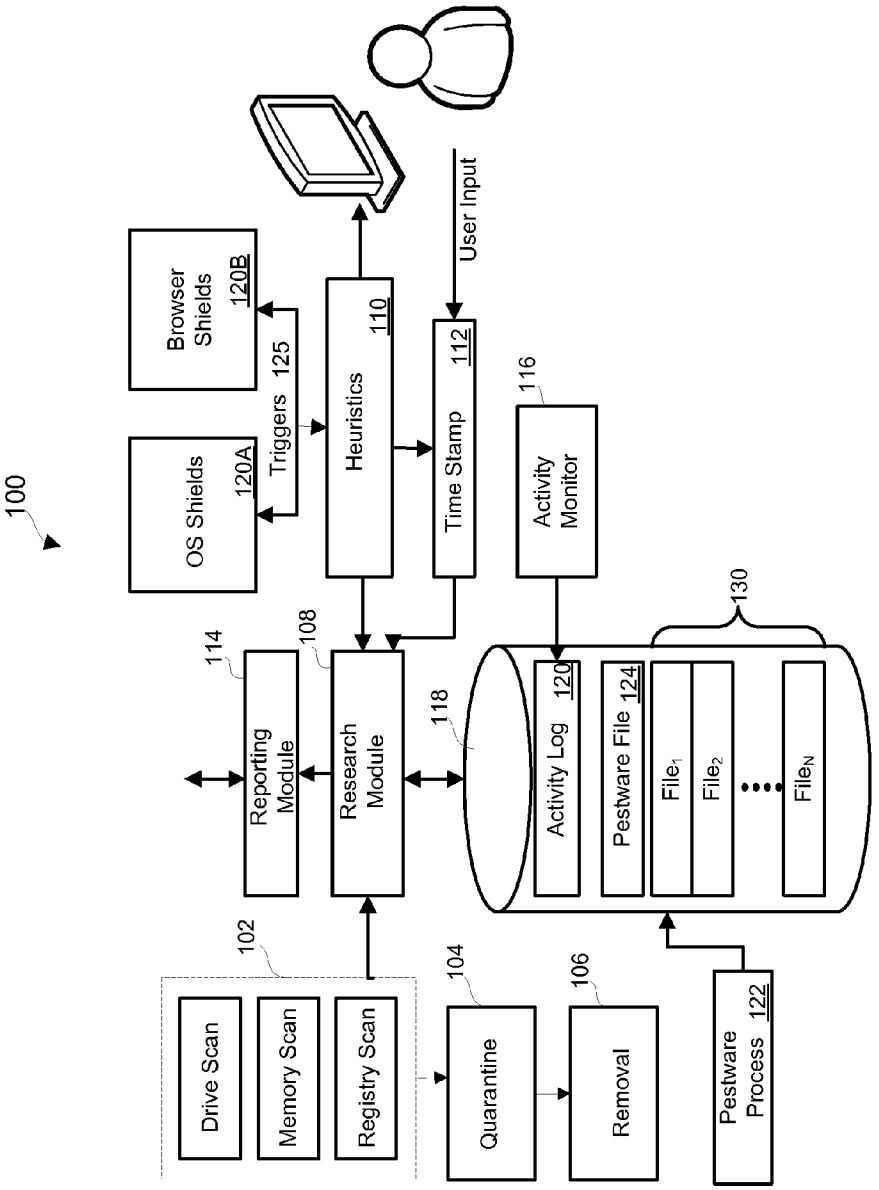
100
OS Shields
120A
Browser Shields
120B
Triggers
125
Heuristics
110
User Input
Time Stamp
112
Activity Monitor
116
Reporting Module
114
Research Module
108
118
Activity Log
120
Pestware File
124
File1
File2
FileN
130
Drive Scan
Memory Scan
Registry Scan
102
Quarantine
104
Removal
106
Pestware Process
122

FIGURE 1

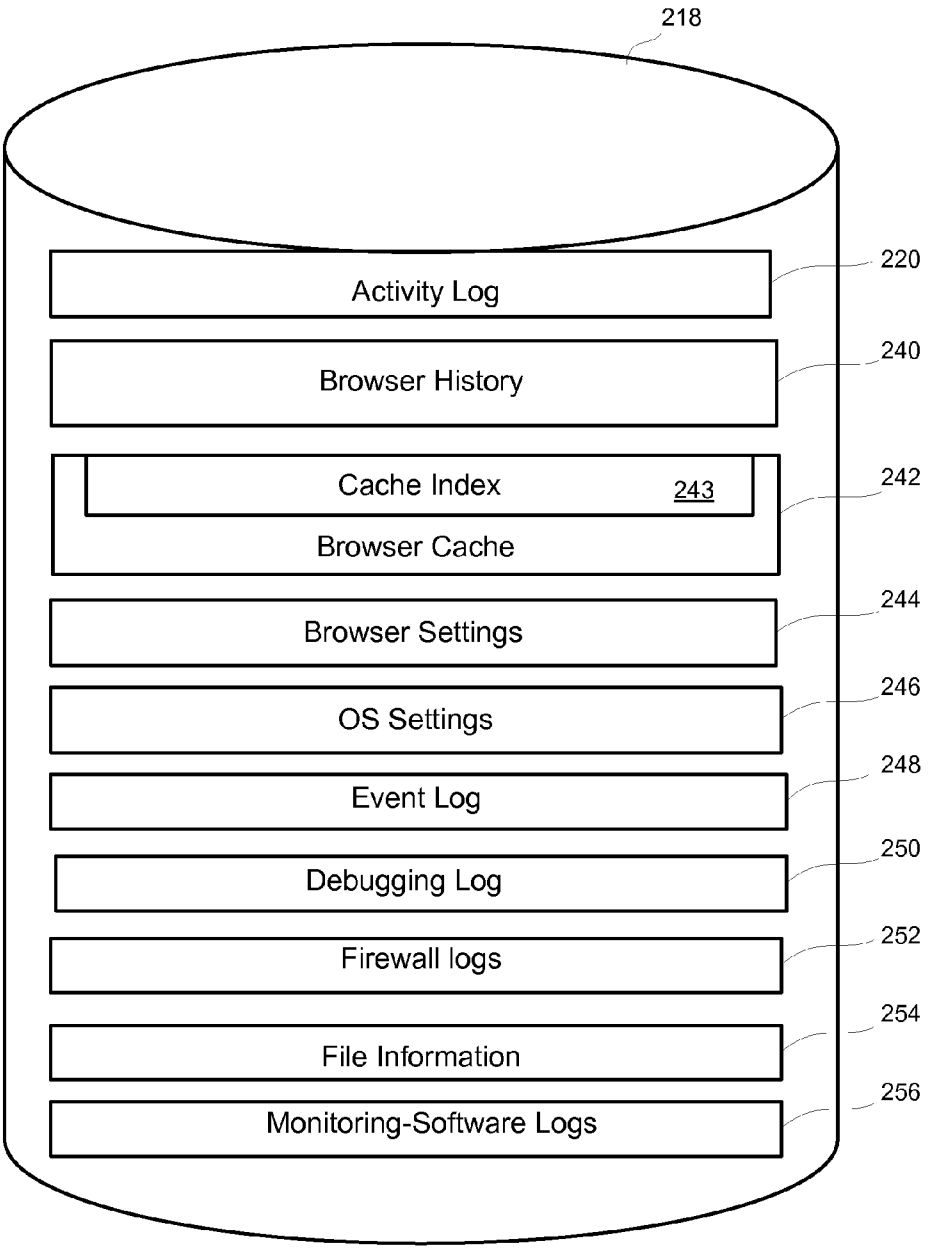
218
Activity Log
220
Browser History
240
Cache Index
243
Browser Cache
242
Browser Settings
244
OS Settings
246
Event Log
248
Debugging Log
250
Firewall logs
252
File Information
254
Monitoring-Software Logs
256

FIGURE 2

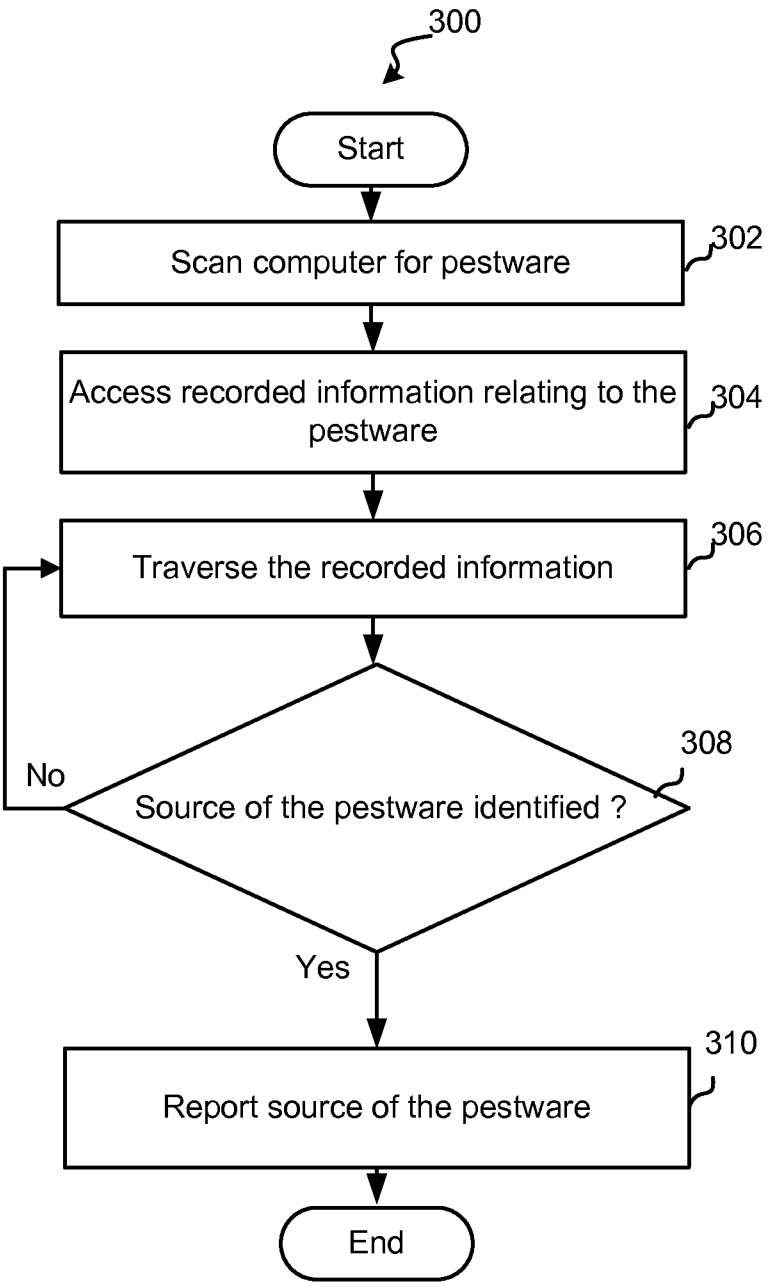
300
Start
Scan computer for pestware
302
Access recorded information relating to the pestware
304
Traverse the recorded information
306
Source of the pestware identified ?
308
No
Yes
Report source of the pestware
310
End

FIGURE 3

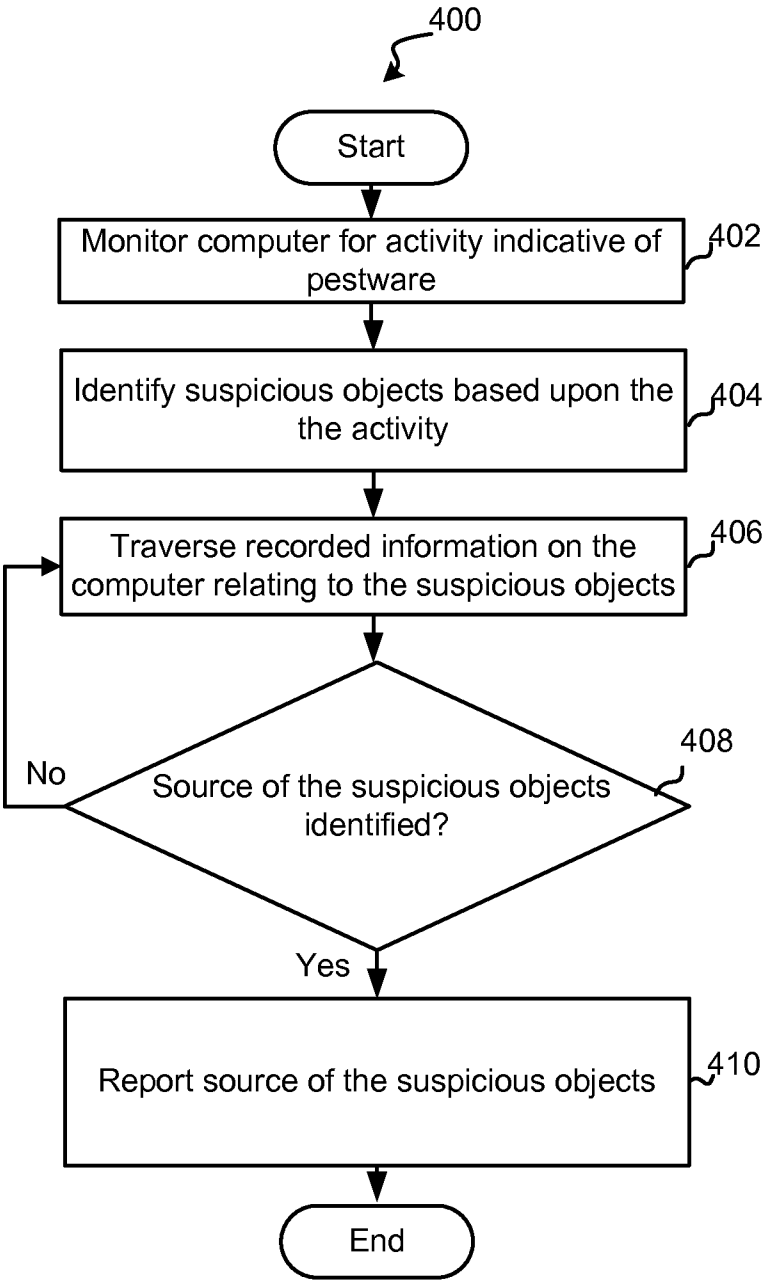
400
Start
Monitor computer for activity indicative of pestware
402
Identify suspicious objects based upon the the activity
404
Traverse recorded information on the computer relating to the suspicious objects
406
Source of the suspicious objects identified?
408
No
Yes
Report source of the suspicious objects
410
End

FIGURE 4

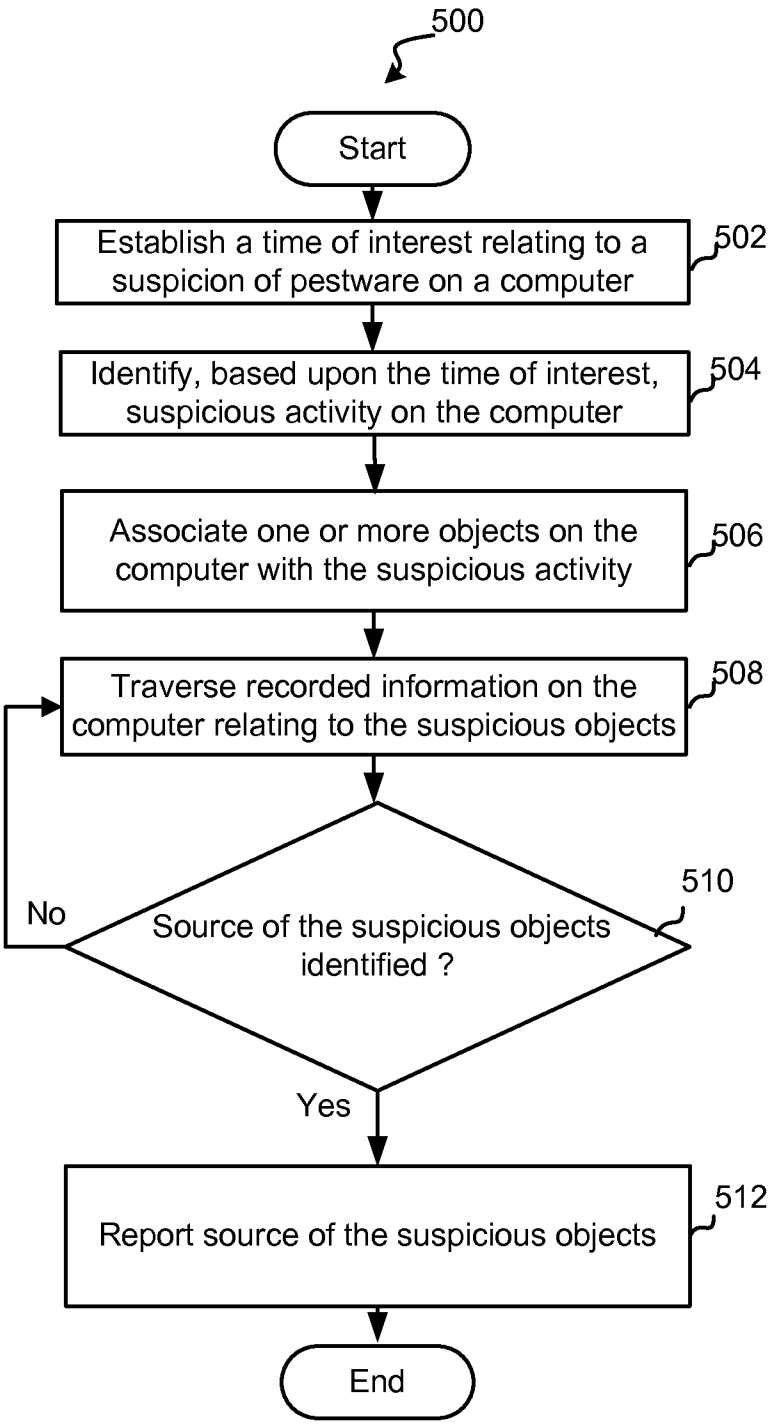
500
Start
Establish a time of interest relating to a suspicion of pestware on a computer
502
Identify, based upon the time of interest, suspicious activity on the computer
504
Associate one or more objects on the computer with the suspicious activity
506
Traverse recorded information on the computer relating to the suspicious objects
508
Source of the suspicious objects identified ?
510
No
Yes
Report source of the suspicious objects
512
End

FIGURE 5

BACKWARDS RESEARCHING ACTIVITY INDICATIVE OF PESTWARE

PRIORITY

The present application is a continuation of commonly-owned and assigned application Ser. No. 11/408,146, entitled Backwards Researching Activity Indicative of Pestware, filed Apr. 20, 2006, which is incorporated herein by reference in its entirety and for all purposes.

RELATED APPLICATIONS

The present application is related to commonly-owned and assigned application Ser. No. 10/956,573, entitled System and Method For Heuristic Analysis to Identify Pestware, which issued as U.S. Pat. No. 7,480,683; application Ser. No. 10/956,574, entitled System and Method for Pestware Detection and Removal which issued as U.S. Pat. No. 7,533,131; application Ser. No. 11/237,291, entitled System and Method for Locating Malware and Generating Malware Definitions; application Ser. No. 11/257,609, entitled System and Method for Kernel-Level Pestware Management; application Ser. No. 11/237,291, entitled Client Side Exploit Tracking; application Ser. No. 11/408,215, entitled Backward Researching Existing Pestware; and application Ser. No. 11/408,145, entitled Backward Researching Time Stamped Events to Find an Origin of Pestware, which are incorporated herein by reference.

COPYRIGHT

A portion of the disclosure of this patent document contains material that is subject to copyright protection. The copyright owner has no objection to the facsimile reproduction by anyone of the patent disclosure, as it appears in the Patent and Trademark Office patent files or records, but otherwise reserves all copyright rights whatsoever.

FIELD OF THE INVENTION

The present invention relates to computer system management. In particular, but not by way of limitation, the present invention relates to systems and methods for detecting, controlling and/or removing pestware.

BACKGROUND OF THE INVENTION

Personal computers and business computers are continually attacked by trojans, spyware, and adware, collectively referred to as "malware," "spyware" or "pestware." These types of programs generally act to gather information about a person or organization—often without the person or organization's knowledge. Some pestware is highly malicious. Other pestware is non-malicious but may cause issues with privacy or system performance. And yet other pestware is actually beneficial or wanted by the user. Unless specified otherwise, "pestware" as used herein refers to any of these programs that collects information about a person or an organization.

Software is presently available to detect and remove pestware. But as it evolves, the software to detect and remove it must also evolve. Accordingly, current techniques and software for removing pestware are not always satisfactory and will most certainly not be satisfactory in the future. Additionally, because some pestware is actually valuable to a user, pestware-detection software should, in some cases, be able to handle differences between wanted and unwanted pestware.

Current pestware removal software uses definitions of known pestware to search for and remove files on a protected system. These definitions are often slow and cumbersome to create. Additionally, it is often difficult to initially locate the pestware in order to create the definitions. Accordingly, a system and method are needed to address the shortfalls of present technology and to provide other new and innovative features.

SUMMARY OF THE INVENTION

Exemplary embodiments of the present invention that are shown in the drawings are summarized below. These and other embodiments are more fully described in the Detailed Description section. It is to be understood, however, that there is no intention to limit the invention to the forms described in this Summary of the Invention or in the Detailed Description. One skilled in the art can recognize that there are numerous modifications, equivalents and alternative constructions that fall within the spirit and scope of the invention as expressed in the claims.

The present invention can provide a system and method for researching an identity of a source of activity that is indicative of pestware. In one embodiment the method comprises monitoring, using a kernel-mode driver, API call activity on the computer; storing information related to the API call activity in a log; analyzing, heuristically, the API call activity to determine whether one or more weighted factors associated with the API call activity exceeds a threshold; identifying, based upon the API call activity, a suspected pestware object on the computer; identifying, in response to the identifying the suspected pestware object, a reference to an identity of an externally networked source of the suspected pestware object; and reporting the identity of the externally networked source to an externally networked pestware research entity.

As previously stated, the above-described embodiments and implementations are for illustration purposes only. Numerous other embodiments, implementations, and details of the invention are easily recognized by those of skill in the art from the following descriptions and claims.

BRIEF DESCRIPTION OF THE DRAWINGS

Various objects and advantages and a more complete understanding of the present invention are apparent and more readily appreciated by reference to the following Detailed Description and to the appended claims when taken in conjunction with the accompanying Drawings wherein:

FIG. **1** illustrates a block diagram of one implementation of the present invention;

FIG. **2** is a block diagram depicting an embodiment of the file storage device of FIG. **1**;

FIG. **3** is a flowchart depicting a method according to an exemplary embodiment;

FIG. **4** is a flowchart depicting another method according to another embodiment;

FIG. **5** is a flowchart depicting yet another method according to yet another embodiment.

DETAILED DESCRIPTION

Referring now to the drawings, where like or similar elements are designated with identical reference numerals throughout the several views, and referring in particular to FIG. **1**, it illustrates a block diagram of one implementation of

the present invention. Shown is a protected computer **100** that includes a detection module **102**, quarantine module **104**, removal module **106**, and shields **120**. In addition, a research module **108** is shown coupled to a heuristics module **110**, a time stamp module **112** and a reporting module **114**.

Each of these modules can be implemented in software or hardware. And if implemented in software, the modules can be implemented in a single software package or in multiple software packages. In addition, one of ordinary skill in the art will recognize that the software can be designed to operate on any type of computer system including WINDOWS and Linux-based systems. Additionally, the software can be configured to operate on personal computers and/or servers. For convenience, embodiments of the present invention are generally described herein with relation to WINDOWS-based systems. Those of skill in the art can easily adapt these implementations for other types of operating systems or computer systems.

Also shown is a file storage device **118** that is coupled to the research module **108** and an activity monitor **116**. In this embodiment the file storage device includes an activity log **120**, a pestware file **124** and a collection of N files **130**. The file storage device **118** is described herein in several implementations as hard disk drive for convenience, but this is certainly not required, and one of ordinary skill in the art will recognize that other storage media may be utilized without departing from the scope of the present invention. In addition, one of ordinary skill in the art will recognize that the storage device **118**, which is depicted for convenience as a single storage device, may be realized by multiple (e.g., distributed) storage devices.

In the exemplary embodiment, the pestware file **124**, corresponds to (e.g., includes data relating to) a pestware process **122** operating in memory. The pestware process **122** is exemplary of pestware processes that are configured to make one or more unauthorized alterations to the computer **100**. For example, the pestware process **122** may make changes to either or both of the browser settings and/or operating system (OS) settings without approval and/or the knowledge of the user.

In accordance with several embodiments, the research module **108** is configured to receive an indication that either known pestware is residing on the computer or activities indicative of pestware have occurred or are occurring on the protected computer. In response, the research module **108** is configured to research the activity log **120** and/or the N files **130**, which include information (e.g., historical logs) relating to events on the computer **100**, to identify a source of the pestware **122**, **124** or pestware-related activities, which may be reported by the reporting module **114** to a centralized data store for subsequent pestware management purposes.

For example, the identities (e.g., I.P. address, URL, email client or program name) of sources (e.g., web sites, email or program) of the pestware may be collected in a centralized data store (not shown) and then subsequently reported to other users. In addition, the sources of the pestware or suspected pestware may be visited to further research how the pestware is being distributed from the URLs and/or to generate new definitions for pestware discovered at these sources.

As described further with reference to FIG. **2**, the N files **130** include one or more files with information that assist the research module **108** in tracing information in the N files **130** to an identity (e.g., URL) of the source of pestware **122**, **124** on the computer **100**. One or more of the N files **130** may be associated with an operating system of the protected computer and/or one or more applications of the protected computer, and may include information such as process IDs, registry entries, file names, cookies and URLs among other information that is used to trace from an identified pestware file, pestware process and/or pestware activity to an originating source (e.g., URL or IP address) of the infection. In one embodiment, one or more of the N files **130** is generated from an application that generates a log of data after examining the computer. An example of such an application is an application distributed under the name HijackThis.

In the exemplary embodiment depicted in FIG. **1**, the research module **108** is configured to receive indications that pestware may be present on the computer from each of the detection engine **102**, the heuristics engine **110** and the time stamp module **112**, but this is certainly not required. In other embodiments, for example, the research module **108** may be configured to communicate only with the detection engine **102** or only with the heuristics engine. In yet other embodiments, the research module **108** may be configured to receive only a time stamp from the time stamp module **112**.

According to several embodiments, pestware-detection functions operating on the protected computer **100** are represented by the detection engine **102**, the quarantine engine **104**, the removal engine **106**, the shields **120** and the heuristic engine **110**. The basic functions of the detection engine **102** is to compare files, processes and registry entries on the protected computer against known pestware definitions and characteristics. When a match is found, in addition to quarantining and removing a pestware object, the detection engine **102** informs the research module **108** of the pestware. Details associated with several embodiments of sweep, quarantine, and removal engines are found in the above-identified application entitled System and Method for Pestware Detection and Removal.

Pestware and pestware activity can also be identified by the shields **120**, which generally run in the background on the computer system. In the exemplary embodiment depicted in FIG. **1**, the shields **120** are divided into the operating system shields **120**A and the browser shields **120**B. The shields **120** are designed to watch for pestware and for typical pestware activity and includes two types of shields: behavior-monitoring shields and definition-based shields.

As an example, the shields **120** monitor the protected computer **100** for certain types of activities that generally correspond to pestware behavior. Particular examples of some of the types of activities that are monitored include a process spawning another process, an alteration to registry entries, communications with remote sites via the Internet, alterations to a start up folder, injection of a DLL into another process, and a change to the browser's home page and/or bookmarks. Some specific examples of shields are disclosed in the above-identified application entitled System and Method for Locating Malware and Generating Malware Definitions. In the exemplary embodiment, the shields **120** inform the heuristics engine **110** about the activities and the heuristics engine **110** determines whether the research module **108** should be informed and/or whether the activity should be blocked.

As an example, the heuristics module **110** may compare the activities on the computer with weighted factors to make decisions relative to activities at the protected computer. Each of these factors may be, for example, associated with a particular activity and each factor may be weighted by the likelihood that the activity is associated with pestware. If the sum of the weighted factors that match the activity history exceed a threshold, then the activity is identified as pestware activity and the heuristics module **110** prompts the research module **108** to initiate research into the origin of the pestware initiating the activity. It should be recognized that this type of heuristics operation is merely one example, and that the heu-

ristics module **110** may use other techniques to analyze activity on the computer. Additional information related to heuristics-based scanning is found in the above-identified applications entitled System and Method For Heuristic Analysis to Identify Pestware and Client Side Exploit Tracking.

In the exemplary embodiment depicted in FIG. **1**, the time stamp module **112** is configured to send a time stamp to the research module **108** in response to a request from a user and/or in response to the heuristics module **110**. In some embodiments for example, the heuristics module **110** provides the user with information about suspect activity on the computer **100** so that the user has the option as to whether or not the research module **108** will attempt to identify the source of the activity.

In other embodiments, the heuristics module **110** prompts the time stamp module **112** to initiate the generation of a time stamp, without user intervention, in response to activity that is indicative of pestware activity. In one implementation, for example, the heuristics module **110** prompts the research module **108** to initiate tracing of the pestware activity to an origin of the pestware that is associated with the activity, and the heuristics module **110** also prompts the time stamp module **112** to send a time stamp to the research module **108** so that the research module **108** is provided with a time reference as well as information about the pestware activities.

In yet other embodiments, the timestamp module **112** operates independently of the heuristics module **110**. For example, the timestamp module **112** may prompt the research module **108** to initiate a review of the activity log **120** and/or one or more of the N files in response to a user request.

The activity monitor **116** in several embodiments monitors activities on the computer and stores information about the activities in the activity log **120** so as to assist the research module **108** in identifying activities associated with pestware and the source of the pestware. In some embodiments, for example, the activity log **120** includes a list of processes that are running on the protected computer and the files that are associated with the processes. Although not depicted in FIG. **1**, the shields **120** may utilize the activity monitor **116** to detect pestware-related events and intercept efforts by pestware to spawn new processes or alter aspects of the protected computer **100**.

In some variations, the activity monitor **116** may inject code into existing processes so that when a process attempts to call a function of the computer's **100** operating system (not shown) the injected code can check the process to be started and raise a flag if the existing process is attempting to create a new pestware process or attempting to alter one or more settings (e.g., a registry setting) of the protected computer **100**.

In other embodiments, the activity monitor **116** is realized by a kernel-mode driver that may be loaded during a boot sequence for the protected computer or anytime later. In these embodiments, the activity monitor **116** is configured to log API calls in the activity log. In many variations for example, when a process (e.g., the pestware process) attempts to spawn a another pestware process or alter a registry entry, the API call utilized by the process is intercepted before it is carried out by an operating system of the protected computer. In this way, the attempt may be logged in the activity log **120** and the process may be analyzed to determine whether it is known to be a pestware-related process. Additional details of use of a kernel-level driver in connection with pestware management may be found in the above identified application entitled: System and Method for Kernel-Level Pestware Management.

It should be recognized that the block diagram in FIG. **1** depicts functional capabilities associated with several embodiments of the present invention. One of ordinary skill in the art will recognize that the functions described with reference to FIG. **1** may be realized by various implementations of software in connection with hardware or hardware alone. In these implementations several functions may be consolidated into a single module, for example, and as a consequence, may appear different from the block diagram in FIG. **1** without departing from the scope of the present invention.

Referring next to FIG. **2**, shown are exemplary resources, also referred to herein as historical logs, that are available to the research module **108** in accordance with one embodiment of the present invention. In general, these resources are logs of historical events that occurred on the computer, and each of the logs includes information that may be used to reference other information when, for example, activities, processes and files are traced so as to determine an origin of the pestware or suspected pestware. As shown, a file storage device **218** in this embodiment includes an activity log **220**, which may be generated by an activity monitor (e.g., the activity monitor **116**) and may include information about processes running on the computer **100** and files corresponding to the processes. In variations, the activity log **220** includes a history of API calls and respective times made by processes running on the protected computer, but this is certainly not required.

In addition, the file storage device **218** includes a browser history **240**, browser cache **242**, browser settings **244**, OS settings **246**, an event log **248**, a debugging log **250**, a firewall log **252**, file information **254** and monitoring software logs **256**. One or more of these exemplary files **240-256** may be implemented for one or more of the N files **130** described with reference to FIG. **1**.

The browser history **240** in this embodiment includes a listing of web sites and respective times that the web sites were visited by the user. The browser cache **242** in this embodiment includes files, cookies, and other objects cached in connection with use of a browser of the protected computer (e.g., Internet Explorer or Mozilla (not shown)). As depicted, the browser cache **242** includes a cache index **243** that includes a listing, which associates the content of the browser cache **242** with URLs and time stamps. As discussed further herein, the cache index **243** provides an efficient means for identifying the times objects were retrieved and the URLs that the objects were retrieved from.

The browser settings **244** include information about settings associated with a browser and may include a home page setting and list of user favorites. The browser settings **244** are monitored by the shields **120** for changes. Those settings also contain URLs that may be referenced in time stamped logs, firewall logs, browser histories, etc.

The operating system (OS) settings **246** may include registry entries, a start up folder and other information utilized by an operating system of the protected computer. As discussed further herein, data included in the OS settings **246** may include time stamps, which indicate when changes were made to the settings.

The event log **248** in this embodiment includes a log of events that is maintained by an operating system of the protected computer **100**. For example, the event log **248** may include event information including errors, user log-in history, a listing of processes that have been launched (and the users that launched the processes), path information, information about which process (and which users) accessed a secure area and other information relating to operations of the computer **100**.

Also shown in FIG. **2** is a debugging log **250** that includes application errors, which point to a process and the address where the error occurred. Some techniques employed by pestware forcibly shut down applications, or cause applications to crash when their memory space is injected with pestware code. The infected applications like "explorer.exe" will crash, or some times restart spontaneously. These events/occurrences show up in debugging logs. These are time stamped events, that also reference files on the system.

The firewall log **252** is this embodiment is a collection of information relating to network-related events on the protected computer. The firewall log **252**, may for example, include time stamps of network activities on the protected computer, which may be utilized by the research module **108** to locate pestware or indicia of pestware.

Also shown in the data storage device **218** is a collection of file information **254**, also known as the file system, which includes a database that the operating system uses to locate and store information about files. For example, the file information **254** may include the date and time a file is created, a date and time the file was last modified, the date and time the files was last accessed and the size of the file.

The monitoring-software logs **256** includes information collected from one or more pieces of monitoring software that are configured to monitor activity on the computer. As an example, the monitoring logs **256** may be generated from a filter driver, a module interfacing with a layer service provider and/or browser helper objects. It should be recognized that the logs **220**, **240-256** depicted in FIG. **2** are merely exemplary and these logs are by no means representative all the potential logs that may be accessed to research origins of pestware and/or suspected-pestware.

Referring next to FIG. **3**, shown is a flowchart depicting a method in accordance with one embodiment. Although reference will be made to FIGS. **1** and **2** for exemplary purposes, it should be recognized that the method described with reference to FIG. **3** is certainly not limited to the specific embodiments described with reference to FIGS. **1** and **2**. As shown, in this embodiment a scan of a computer (e.g., the computer **100**) for pestware is initially carried out (Block **302**). In several embodiments for example, the detection engine **102** scans the file storage device **118**, the operating system registry and executable memory of the protected computer for indicia of pestware (e.g., processes or files matching pestware definitions and/or alterations to a registry entry that are consistent with pestware).

As shown in FIG. **3**, if pestware indicia is found, then recorded information (e.g., the activity log **120** and/or the N files **130**) that may include traces of the pestware is accessed (Block **304**), and traversed to search for information leading to the identification of the source of the pestware (Block **306**). In some instances, the origin of the pestware may be identified by simply referencing one piece of data that is stored in connection with the identification of the pestware source. In other instances, however, it may be necessary to access several pieces of referential data, which may be located in one or more of the files **220-256** before arriving at the identity of the source of the pestware.

As an example, if a pestware file is found on the file storage device **118**, then the cache index **243** of the browser cache **242** may be searched to identify the name of the file, and if the originating URL is stored in connection with the file, the URL is identified as the source of the file. As another example, if a pestware process is identified, a search of the activity log **220** may lead to the identity of a second process that spawned the pestware process, and additional searching of the activity log **220** using the name of the second process may lead to the identification of a pestware file associated with the second process. In turn, a search of the cache index **243** for the name of the pestware file may lead to the URL from which the pestware file was downloaded.

As shown in FIG. **3**, if the source of the pestware is identified (Block **308**), then the source of the pestware is reported (Block **310**). In some embodiments, it is contemplate that several other computers configured in accordance with the protected computer **100** depicted in FIG. **1** may also report sources of pestware to a centralized location where the URLs may be added to a list of "bad URLs." In addition, the identified URLs may be actively searched to learn more about the pestware generated at the sites, which may help generate definitions for the pestware and may provide information about how pestware infections occur.

Referring next to FIG. **4**, shown is a flowchart depicting a method in accordance with another embodiment of the present invention. Again, reference will be made to FIGS. **1** and **2** for exemplary purposes, but it should be recognized that the method described with reference to FIG. **4** is certainly not limited to the specific embodiments described with reference to FIGS. **1** and **2**. As shown, in this embodiment activity on a computer is monitored for indicia of pestware (Block **402**), and if potential pestware-related activity is detected, recorded information related to the activity is searched to identify one or more suspicious objects (e.g., files and/or processes) that are related to the activity (Block **404**). In some embodiments, the shields **120** (described with reference to FIG. **1**) may monitor the protected computer **100** for activities, and if the activity is identified as potential pestware activity (e.g., by the heuristics module **110**), then the research module **108** searches the activity log **120** and/or one or more of the N files for information relating to the pestware-related activity.

As shown in FIG. **4**, recorded information (e.g., one or more of the N files) is then traversed to trace through information related to the suspicious objects that leads to an origin of the suspicious objects (Block **406**). In one embodiment for example, the suspicious activity leads to a search for suspicious processes and/or files related to the activity (e.g., using the activity log **120**), which then leads to a search of one or more of the N files **130** (e.g., the cache index **243**) for an indication of the source of the suspicious process and/or files.

As depicted in FIG. **4**, if the source of the suspicious object(s) is identified (Block **408**), then the source of the suspicious object(s) is then reported (e.g., to a pestware research entity). In this way, the suspicious objects and the web sites originating the suspicious objects may be further researched to establish the extent to which they may be a threat.

As an example of pestware-related activity that may trigger the search for a source of the activity, if a series of particular API calls is made in a pattern known to be associated with pestware, the process(es) making the calls may be identified using, for example, the activity log **120**. In turn, the activity log **120** may be used to identify the file(s) associated with the process(es), and the cache index **243** may be utilized to search for a source of the file(es). It should be recognized that this is merely one example of the type of activity that may trigger backwards researching of logs on a computer, and that patterns in process creation, downloaded files, changes to an operating system registry and browser settings, for example, may trigger a search of the computer's logs.

Referring next to FIG. **5**, shown is a flowchart depicting yet another method in accordance with another embodiment of the present invention. While referring to FIG. **5**, simultaneous reference will be made to FIGS. **1** and **2** for exemplary purposes, but it should be recognized that the method described

with reference to FIG. **5** is certainly not limited to the specific embodiments described with reference to FIGS. **1** and **2**.

As shown, in this embodiment a time of interest is initially established based upon a suspicion that pestware has infected a computer (Block **502**). In some embodiments, for example, a user may establish the time of interest based upon events the user observed (e.g., pop-ups or a system crash). In one embodiment, as discussed with reference to FIG. **1**, in response to a user request, the time stamp module **112** may issue a time stamp and initiate research that is related to activity occurring at or around the time of the time stamp. In variations, the user is provide with an alert in response to the heuristics module **110** identifying an activity that is suspicious and the user is given an option to initiate research at or around the time of interest.

In other embodiments, the time stamp module **112** automatically generates a time stamp in response to a report of suspicious activity (e.g., from the shields **120** or heuristics module **110**).

As shown in FIG. **5**, once a time of interest is established, suspicious activity is identified on the computer based upon the time of interest (Block **504**). The time of interest may be established, for example, to include a time period before the time stamp is issued so that a search for suspicious activity is limited to a particular time period. In some embodiments, the activity log **130** and/or one or more of the N files **130** are accessed and analyzed to determine whether any activity during the time of interest is suspicious (e.g., the activity indicates in some way that it may be associated with pestware). As an example, if any logged information (e.g., in the activity log **130** and/or one or more of the N files **130**) indicates that during the time of interest that, for example, access to the registry was carried out in connection with a downloaded file or the launch of a process, the activities may identified as being suspect and further research relative to the process and the file may carried out.

Beneficially, many of the logs accessed include time-stamped information, which enables an activity that occurred during the time of interest to be readily identified and analyzed either alone or in connection with other activities occurring during the time of interest. As an example, the activity log **220**, the browser history **240**, browser cache **242**, operating system setting **246**, the event log **248**, the debugging log **250** the firewall log **252**, the file information **254** and the monitoring software logs **256** include time stamped information that provides insight into the activities that occurred on the computer during the time of interest.

As depicted in FIG. **5**, once one or more activities are identified as being suspicious (Block **504**), one or more objects (e.g., processes or files) on the computer are associated with the suspicious activity (Block **506**). For example, the research module **108** may search the activity log **120** and/or one or more of the N files for information that associates the suspicious activity to one or more processes and the processes may be related to one or more files.

As shown in FIG. **5**, recorded information on the computer is then traversed in order to trace to an origin of one or more of the objects (Block **508**). For example, a search of one or more of the N files **130** (e.g., the cache index **243**) may be carried out to identify the source of a suspicious process and/or files. Once the source of the suspicious object(s) is identified (Block **510**), the source is then reported (e.g., to a remote research entity)(Block **512**).

It should be recognized that the methods described with reference to FIGS. **3**, **4** and **5** are merely exemplary and are certainly not the only modes of operation that are contemplated. As an example, the establishment of a time of interest, as discussed with reference to FIG. **5**, may be useful in the method described with reference to FIGS. **3** and **4** for identifying information that leads to the source of the pestware or pestware-related activities. Moreover, it is contemplated that aspects from all three of the methods described with reference to FIGS. **3**, **4** and **5** may be combined.

In conclusion, the present invention provides, among other things, a system and method for identifying a source of pestware or suspected pestware on a computer. Those skilled in the art can readily recognize that numerous variations and substitutions may be made in the invention, its use and its configuration to achieve substantially the same results as achieved by the embodiments described herein. Accordingly, there is no intention to limit the invention to the disclosed exemplary forms. Many variations, modifications and alternative constructions fall within the scope and spirit of the disclosed invention as expressed in the claims.

What is claimed is:

1. A method for identifying an origin of activity on a computer that is indicative of pestware comprising:

monitoring, using a kernel-mode driver, API call activity on the computer;

storing information related to the API call activity in a log;

analyzing, heuristically, the API call activity to determine whether one or more weighted factors associated with the API call activity exceeds a threshold;

identifying, based upon the API call activity, a suspected pestware object on the computer;

identifying, in response to the identifying the suspected pestware object, a reference to an identity of an externally networked source of the suspected pestware object; and

reporting the identity of the externally networked source to an externally networked pestware research entity, wherein

the identity of the externally networked source is selected from a group consisting of an I.P. address, a URL, an email client and a program.

2. The method of claim **1**, wherein the identifying the suspected pestware object includes accessing an activity log that includes information that relates the activity to the suspected pestware object.

3. The method of claim **1**, wherein the identifying a reference includes accessing at least a portion of a recorded history of externally networked sources.

4. The method of claim **3**, wherein the recorded history resides in at least one log selected from the group consisting of an activity log, a browser history, browser cache, browser settings, operating system settings, an event log, a debugging log, a firewall log, file information and monitoring software logs.

5. A system for identifying a source of activity on a computer that is indicative of pestware including:

a kernel-level monitor configured to monitor API call activity on the computer and to store information related to the API call activity in a log;

a heuristics module configured to analyze the API call activity to determine whether one or more weighted factors associated with the API call activity exceeds a threshold;

a research portion configured to identify, in response to a prompt from the heuristics module, a suspected pestware object on the computer; and

a reporting portion configured to generate a report including a reference to an identity of an externally networked source of the suspected pestware object and to report the

identity of the externally networked source to an externally networked pestware research entity, wherein

the kernel-level monitor is configured to store information about a relationship between at least one API call of the API call activity and a file.

6. The system of claim **5**, wherein the information comprises an identity of at least one process that made at least one API call in the log.

7. The system of claim **5**, wherein the heuristics module is configured to receive information about the API call activity from the kernel-level monitor and to determine whether the API call activity is indicative of pestware.

8. The system of claim **5**, wherein the kernel-level monitor is configured to intercept at least one API call.

9. The system of claim **5**, wherein the identity of the externally networked source is selected from the group consisting of an I.P. address, a URL, an email client and a program name.

10. The system of claim **5**, wherein the research portion is configured to access at least a portion of a recorded history of externally networked sources.

11. The system of claim **10**, wherein the recorded history resides in at least one log selected from the group consisting of an activity log, a browser history, browser cache, browser settings, operating system settings, an event log, a debugging log, a firewall log, file information and monitoring software logs.

12. A non-transitory computer-readable medium including processor-executable instructions for identifying an origin of activity on a computer that is indicative of pestware, the instructions including instructions for:

monitoring, using a kernel-mode driver, API call activity on the computer;

storing information related to the API call activity in a log;

analyzing, heuristically, the API call activity to determine whether one or more weighted factors associated with the API call activity exceeds a threshold;

identifying, based upon the API call activity, a suspected pestware object on the computer;

identifying, in response to the identifying the suspected pestware object, a reference to an identity of an externally networked source of the suspected pestware object; and

reporting the identity of the externally networked source to an externally networked pestware research entity, wherein

the identity of the externally networked source is selected by an identifier selected from a group consisting of an I.P. address, a URL, an email client and a program.

13. The non-transitory computer-readable medium of claim **12**, wherein the instructions for identifying the suspected pestware object include instructions for accessing an activity log that includes information that relates the activity to the suspected pestware object.

14. The non-transitory computer-readable medium of claim **12**, wherein the instructions for identifying a reference include instructions for accessing at least a portion of a recorded history of externally networked sources.

15. The non-transitory computer-readable medium of claim **14**, wherein the recorded history resides in at least one log selected from the group consisting of an activity log, a browser history, browser cache, browser settings, operating system settings, an event log, a debugging log, a firewall log, file information and monitoring software logs.

* * * * *