AO 120 (Rev. 08/10)

TO: Mail Stop 8 Director of the U.S. Patent and Trademark Office P.O. Box 1450 Alexandria, VA 22313-1450	REPORT ON THE FILING OR DETERMINATION OF AN ACTION REGARDING A PATENT OR TRADEMARK

In Compliance with 35 U.S.C. § 290 and/or 15 U.S.C. § 1116 you are hereby advised that a court action has been filed in the U.S. District Court Western District of Texas, Waco Division on the following

☐ Trademarks or ☑ Patents. (☐ the patent action involves 35 U.S.C. § 292.):

DOCKET NO.	DATE FILED	U.S. DISTRICT COURT
6:22-cv-00241	3/4/2022	Western District of Texas, Waco Division

PLAINTIFF	DEFENDANT
Webroot, Inc. and OpenText Inc.	CrowdStrike, Inc. and CrowdStrike Holdings, Inc.

PATENT OR TRADEMARK NO.	DATE OF PATENT OR TRADEMARK	HOLDER OF PATENT OR TRADEMARK
1		
2		
3		
4		
5		

In the above—entitled case, the following patent(s)/ trademark(s) have been included:

DATE INCLUDED 9/7/2022	INCLUDED BY ☑ Amendment ☐ Answer ☐ Cross Bill ☐ Other Pleading	
PATENT OR TRADEMARK NO.	DATE OF PATENT OR TRADEMARK	HOLDER OF PATENT OR TRADEMARK
1 11,409,869	8/9/2022	Webroot, Inc.
2 8,719,932	5/6/2014	Webroot, Inc.
3 8,201,243	6/12/2012	Webroot, Inc.
4 8,181,244	5/15/2012	Webroot, Inc.
5 8,856,505	10/7/2014	Webroot, Inc.
6 8,763,123	6/24/2014	Webroot, Inc.

In the above—entitled case, the following decision has been rendered or judgement issued:

DECISION/JUDGEMENT

CLERK	(BY) DEPUTY CLERK	DATE

Copy 1—Upon initiation of action, mail this copy to Director **Copy 3—Upon termination of action, mail this copy to Director**
Copy 2—Upon filing document adding patent(s), mail this copy to Director **Copy 4—Case file copy**

AO 120 (Rev. 08/10)

TO: Mail Stop 8 Director of the U.S. Patent and Trademark Office P.O. Box 1450 Alexandria, VA 22313-1450	REPORT ON THE FILING OR DETERMINATION OF AN ACTION REGARDING A PATENT OR TRADEMARK

In Compliance with 35 U.S.C. § 290 and/or 15 U.S.C. § 1116 you are hereby advised that a court action has been filed in the U.S. District Court Western District of Texas, Waco Division on the following

☐ Trademarks or ☑ Patents. (☐ the patent action involves 35 U.S.C. § 292.):

DOCKET NO.	DATE FILED	U.S. DISTRICT COURT
6:22-cv-00239	3/4/2022	Western District of Texas, Waco Division

PLAINTIFF	DEFENDANT
Webroot, Inc. and OpenText Inc.	TrendMicro, Inc.

PATENT OR TRADEMARK NO.	DATE OF PATENT OR TRADEMARK	HOLDER OF PATENT OR TRADEMARK
1		
2		
3		
4		
5		

In the above---entitled case, the following patent(s)/ trademark(s) have been included:

DATE INCLUDED 8/31/2022	INCLUDED BY ☑ Amendment ☐ Answer ☐ Cross Bill ☐ Other Pleading	
PATENT OR TRADEMARK NO.	DATE OF PATENT OR TRADEMARK	HOLDER OF PATENT OR TRADEMARK
1 11,409,869	8/9/2022	Webroot, Inc.
2 8,719,932	5/6/2014	Webroot, Inc.
3 8,201,243	6/12/2012	Webroot, Inc.
4 8,181,244	5/15/2012	Webroot, Inc.
5 8,856,505	10/7/2014	Webroot, Inc.

In the above---entitled case, the following decision has been rendered or judgement issued:

DECISION/JUDGEMENT

CLERK	(BY) DEPUTY CLERK	DATE

Copy 1---Upon initiation of action, mail this copy to Director Copy 3---Upon termination of action, mail this copy to Director
Copy 2---Upon filing document adding patent(s), mail this copy to Director Copy 4---Case file copy

UNITED STATES PATENT AND TRADEMARK OFFICE

UNITED STATES DEPARTMENT OF COMMERCE
United States Patent and Trademark Office
Address: COMMISSIONER FOR PATENTS
P.O. Box 1450
Alexandria, Virginia 22313-1450
www.uspto.gov

APPLICATION NUMBER	FILING OR 371(C) DATE	FIRST NAMED APPLICANT	ATTY. DOCKET NO./TITLE
11/408,146	04/20/2006	Matthew L. Boney	6890-61/04584.0051US01

CONFIRMATION NO. 8009

IMPROPER CPOA LETTER

23552
MERCHANT & GOULD P.C.
P.O. BOX 2903
MINNEAPOLIS, MN 55402-0903

OC000000116718731

Date Mailed: 05/12/2020

NOTICE REGARDING POWER OF ATTORNEY

This is in response to the power of attorney filed 04/14/2020. The power of attorney in this application is not accepted for the reason(s) listed below:

- The power of attorney is from an assignee and the statement required by 37 CFR 3.73(c) has not been received.

/trwoodson/

Office of Data Management, Application Assistance Unit (571) 272-4000, or (571) 272-4200, or 1-888-786-0101

109422
Sprinkle IP Law Group/OPEN
1301 W. 25th Street, Suite 408
Austin, TX 78705
UNITED STATES

Power of Attorney to Transact Business with the United States Patent and Trademark Office

I hereby revoke all previous Powers of Attorney given in the application(s) identified in the attached Transmittal for Power of Attorney to One or More Registered Practitioners ("Transmittal Form").

I hereby appoint practitioners associated with the following Customer Number associated with Sprinkle IP Law Group, PC :

109422

as my/our attorney(s) or agent(s) and to transact all business before the United States Patent and Trademark Office (USPTO) in connection with any and all patents and patent applications that are assigned to **Webroot Inc.** (the "assignee's patents/patent applications") in which they shall appear, any and all assignee's patents/patent applications associated with the above-referenced customer number, and any and all patents and patent applications referenced in the attached Transmittal Form.

Please recognize or change the correspondence address for the patents and patent applications referenced in the attached Transmittal Form to the address associated with the above-referenced customer number.

The undersigned is:

- ☐ Inventor or Joint Inventor
- ☒ Assignee or Person to Whom the Inventor is Under an Obligation to Assign
  *the undersigned has authority to act on behalf of the Assignee or Person to Whom the Inventor is Under an Obligation to Assign.
- ☐ Legal Representative of a Deceased or Legally Incapacitated Inventor
- ☐ Person Who Otherwise Shows Sufficient Proprietary Interest (e.g., a petition under 37 CFR 1.46(b)(2) was granted in the application or is currently being filed in this document)

The Transmittal Form may be completed and executed by one of the practitioners associated with the above-referenced customer number.

SIGNATURE OF APPLICANT

Signature:		**Date:**	January 29, 2020
Name:	**Gordon A. Davies**		
Title:	Director		
Company:	**Webroot Inc.**		

I am authorized to act on behalf of the assignee.

Electronic Acknowledgement Receipt

EFS ID:	39150736
Application Number:	11408146
International Application Number:	
Confirmation Number:	8009
Title of Invention:	BACKWARDS RESEARCHING ACTIVITY INDICATIVE OF PESTWARE
First Named Inventor/Applicant Name:	Matthew L. Boney
Customer Number:	23552
Filer:	John L. Adair/keunah cheun
Filer Authorized By:	John L. Adair
Attorney Docket Number:	6890-61/04584.0051US01
Receipt Date:	14-APR-2020
Filing Date:	20-APR-2006
Time Stamp:	11:39:39
Application Type:	Utility under 35 USC 111(a)

Payment information:

Submitted with Payment	no

File Listing:

Document Number	Document Description	File Name	File Size(Bytes)/ Message Digest	Multi Part /.zip	Pages (if appl.)
1	Power of Attorney	WEBROOT_POA_012820.pdf	42303 460c019d47e52952aad549f0d335131a49b6cfef	no	1

Warnings:

Information:	
Total Files Size (in bytes):	42303

This Acknowledgement Receipt evidences receipt on the noted date by the USPTO of the indicated documents, characterized by the applicant, and including page counts, where applicable. It serves as evidence of receipt similar to a Post Card, as described in MPEP 503.

New Applications Under 35 U.S.C. 111
If a new application is being filed and the application includes the necessary components for a filing date (see 37 CFR 1.53(b)-(d) and MPEP 506), a Filing Receipt (37 CFR 1.54) will be issued in due course and the date shown on this Acknowledgement Receipt will establish the filing date of the application.
National Stage of an International Application under 35 U.S.C. 371
If a timely submission to enter the national stage of an international application is compliant with the conditions of 35 U.S.C. 371 and other applicable requirements a Form PCT/DO/EO/903 indicating acceptance of the application as a national stage submission under 35 U.S.C. 371 will be issued in addition to the Filing Receipt, in due course.
New International Application Filed with the USPTO as a Receiving Office
If a new international application is being filed and the international application includes the necessary components for an international filing date (see PCT Article 11 and MPEP 1810), a Notification of the International Application Number and of the International Filing Date (Form PCT/RO/105) will be issued in due course, subject to prescriptions concerning national security, and the date shown on this Acknowledgement Receipt will establish the international filing date of the application.

UNITED STATES PATENT AND TRADEMARK OFFICE

Commissioner for Patents
United States Patent and Trademark Office
P.O. Box 1450
Alexandria, VA 22313-1450
www.uspto.gov

MAILED
MAR 07 2017
OFFICE OF PETITIONS

MERCHANT & GOULD P.C.
P.O. BOX 2903
MINNEAPOLIS MN 55402-0903

In re Patent No.: 8,201,243	:	
Issue Date: June 12, 2012	:	
Application No. 11/408,146	:	NOTICE
Filed: April 20, 2006	:	
Attorney Docket No.: 6890-61/04584.0051US01	:	

This is a notice regarding the request for acceptance of a fee deficiency submission under 37 CFR 37 CFR 1.28(c) filed August 23, 2016.

On September 1, 1998, the Court of Appeals for the Federal Circuit held that 37 CFR 1.28(c) is the sole provision governing the time for correction of the erroneous payment of the issue fee as a small entity. **See DH Technology v. Synergystex International, Inc. 154 F.3d 1333, 47 USPQ2d 1865 (Fed. Cir. Sept. 1, 1998).**

The Office no longer investigates or rejects original or reissue applications under 37 CFR 1.56. **1098 Off. Gaz. Pat. Office 502 (January 3, 1989)**. Therefore, nothing in this Notice is intended to imply that an investigation was done.

Your fee deficiency submission under 37 CFR 1.28 is hereby **ACCEPTED**.

Accordingly, all future fees paid in this patent/application should be paid at the large entity rate.

There is no indication that the petition is signed by a registered patent attorney or patent agent of record. However, in accordance with 37 CFR 1.34, the signature of Mr. Thomas C. Fiala, appearing on the correspondence shall constitute a representation to the United States Patent and Trademark Office that he is authorized to represent the particular party in whose behalf he acts.

Any questions concerning this matter may be directed to the undersigned at (571) 272-6735.

/Diane C. Goodwyn/
Diane C. Goodwyn
Paralegal Specialist
Office of Petitions

cc: THOMAS C. FIALA
P.O. BOX 52050
MINNEAPOLIS, MN 55402

IN THE UNITED STATES PATENT AND TRADEMARK OFFICE

PATENT NUMBER: 8201243

ISSUE DATE: 06-12-2012

APPLICATION SER. NUMBER: 11/408,146

FILING DATE: 04-20-2006

ATTORNEY DOCKET NUMBER: 6890-61/04584.0051US01

CONFIRMATION NUMBER: 8009

TITLE: BACKWARDS RESEARCHING ACTIVITY INDICATIVE OF PESTWARE

Current Date: August 23, 2016

REQUEST FOR CORRECTION OF PAYMENT DEFICIENCY
UNDER 37 C.F.R. 1.28 (c)

Commissioner for Patents
Mail Stop M Correspondence
P.O. Box 1450
Alexandria, VA 22313-1450

Sir:

The Owner of above-listed U.S. Patent No. 8201243 respectfully requests that a payment for deficiency owed regarding the 3.5-year maintenance fee be accepted by the Office. The patent maintenance fee previously paid for this matter on November 25, 2015 was paid in good faith based on a small entity status. However, due to an oversight the 3.5-year patent maintenance fee should have been paid based upon large entity status. The total deficiency currently owed is $800.00. The itemization of the deficiency payment is as follows:

Current Maint. Fee Due at 3.5 years for Large Entity:	$1600.00
Maint. Fee Previously Paid as Small Entity:	$800.00
TOTAL DEFICIENCY OWED:	**$800.00**

Owner of the above-listed patent respectfully requests the Office to accept this request to increase the 3.5 year maintenance fee to large entity based upon compliance herein with 37 C.F.R. 1.28 (c). The Commissioner is hereby authorized to charge $800.00 the deficiency owed, and any additional fee that may be due or credit any overpayment to Representative's Deposit Account No. 50-4623.

Respectfully submitted,
/Thomas C. Fiala, #43,610/

Thomas C. Fiala Reg. No. 43,610
Authorized Representative CPA Global
P.O. Box 52050
Minneapolis, MN 55402
301-718-2259
tfiala@fwiplaw.com

Electronic Acknowledgement Receipt

EFS ID:	26718902
Application Number:	11408146
International Application Number:	
Confirmation Number:	8009
Title of Invention:	BACKWARDS RESEARCHING ACTIVITY INDICATIVE OF PESTWARE
First Named Inventor/Applicant Name:	Matthew L. Boney
Customer Number:	23552
Filer:	Thomas Christopher Fiala/Michelle Murray-Hitchcock
Filer Authorized By:	Thomas Christopher Fiala
Attorney Docket Number:	6890-61/04584.0051US01
Receipt Date:	23-AUG-2016
Filing Date:	20-APR-2006
Time Stamp:	11:53:14
Application Type:	Utility under 35 USC 111(a)

Payment information:

Submitted with Payment	no

File Listing:

Document Number	Document Description	File Name	File Size(Bytes)/ Message Digest	Multi Part /.zip	Pages (if appl.)
1	Petition for review by the Office of Petitions	US_PAT_8201243_Request_for_Correction_of_payment_deficiency.pdf	23334 2baad6e014bfd7c5398886af54e0ef5f93bd926d	no	2

Warnings:

Information:	
Total Files Size (in bytes):	23334

This Acknowledgement Receipt evidences receipt on the noted date by the USPTO of the indicated documents, characterized by the applicant, and including page counts, where applicable. It serves as evidence of receipt similar to a Post Card, as described in MPEP 503.

New Applications Under 35 U.S.C. 111
If a new application is being filed and the application includes the necessary components for a filing date (see 37 CFR 1.53(b)-(d) and MPEP 506), a Filing Receipt (37 CFR 1.54) will be issued in due course and the date shown on this Acknowledgement Receipt will establish the filing date of the application.

National Stage of an International Application under 35 U.S.C. 371
If a timely submission to enter the national stage of an international application is compliant with the conditions of 35 U.S.C. 371 and other applicable requirements a Form PCT/DO/EO/903 indicating acceptance of the application as a national stage submission under 35 U.S.C. 371 will be issued in addition to the Filing Receipt, in due course.

New International Application Filed with the USPTO as a Receiving Office
If a new international application is being filed and the international application includes the necessary components for an international filing date (see PCT Article 11 and MPEP 1810), a Notification of the International Application Number and of the International Filing Date (Form PCT/RO/105) will be issued in due course, subject to prescriptions concerning national security, and the date shown on this Acknowledgement Receipt will establish the international filing date of the application.

UNITED STATES PATENT AND TRADEMARK OFFICE

UNITED STATES DEPARTMENT OF COMMERCE
United States Patent and Trademark Office
Address: COMMISSIONER FOR PATENTS
P.O. Box 1450
Alexandria, Virginia 22313-1450
www.uspto.gov

APPLICATION NUMBER	FILING OR 371(C) DATE	FIRST NAMED APPLICANT	ATTY.DOCKET NO./TITLE	REQUEST ID
11/408,146	04/20/2006	Matthew L. Boney	6890-61/04584.0051US01	18078

Acknowledgement of Loss of Entitlement to Entity Status Discount

The entity status change request below filed through Private PAIR on 05/17/2016 has been accepted.

CERTIFICATIONS:

Change of Entity Status:

X Applicant changing to regular undiscounted fee status.
NOTE: Checking this box will be taken to be notification of loss of entitlement to small or micro entity status, as applicable.

This portion must be completed by the signatory or signatories making the entity status change in accordance with 37 CFR 1.4(d)(4).

Signature:	/Andrew T. Pouzeshi/
Name:	Andrew T. Pouzeshi
Registration Number:	67672

UNITED STATES PATENT AND TRADEMARK OFFICE

UNITED STATES DEPARTMENT OF COMMERCE
United States Patent and Trademark Office
Address: COMMISSIONER FOR PATENTS
P.O. Box 1450
Alexandria, Virginia 22313-1450
www.uspto.gov

APPLICATION NUMBER	FILING OR 371(C) DATE	FIRST NAMED APPLICANT	ATTY. DOCKET NO./TITLE
11/408,146	04/20/2006	Matthew L. Boney	6890-61/04584.0051US01

CONFIRMATION NO. 8009

23552
MERCHANT & GOULD P.C.
P.O. BOX 2903
MINNEAPOLIS, MN 55402-0903

POA ACCEPTANCE LETTER

OC000000077449836

Date Mailed: 09/17/2015

NOTICE OF ACCEPTANCE OF POWER OF ATTORNEY

This is in response to the Power of Attorney filed 09/04/2015.

The Power of Attorney in this application is accepted. Correspondence in this application will be mailed to the above address as provided by 37 CFR 1.33.

Questions about the contents of this notice and the requirements it sets forth should be directed to the Office of Data Management, Application Assistance Unit, at **(571) 272-4000** or **(571) 272-4200** or **1-888-786-0101**.

/qtran/

UNITED STATES PATENT AND TRADEMARK OFFICE

UNITED STATES DEPARTMENT OF COMMERCE
United States Patent and Trademark Office
Address: COMMISSIONER FOR PATENTS
P.O. Box 1450
Alexandria, Virginia 22313-1450
www.uspto.gov

APPLICATION NUMBER	FILING OR 371(C) DATE	FIRST NAMED APPLICANT	ATTY. DOCKET NO./TITLE
11/408,146	04/20/2006	Matthew L. Boney	6890-61

CONFIRMATION NO. 8009

POWER OF ATTORNEY NOTICE

22442
Sheridan Ross PC
1560 Broadway
Suite 1200
Denver, CO 80202

OC000000077449824

Date Mailed: 09/17/2015

NOTICE REGARDING CHANGE OF POWER OF ATTORNEY

This is in response to the Power of Attorney filed 09/04/2015.

- The Power of Attorney to you in this application has been revoked by the assignee who has intervened as provided by 37 CFR 3.71. Future correspondence will be mailed to the new address of record(37 CFR 1.33).

Questions about the contents of this notice and the requirements it sets forth should be directed to the Office of Data Management, Application Assistance Unit, at **(571) 272-4000** or **(571) 272-4200** or **1-888-786-0101**.

/qtran/

IN THE UNITED STATES PATENT AND TRADEMARK OFFICE

Applicant:	WEBROOT INC.	Examiner:	RAHMAN, MAHFUZUR
Serial No.:	11/408,146	Group Art Unit:	2438
Patent No.:	8,201,243	Issue Date:	06-12-2012
Filed:	04-20-2006	Docket No.:	04584.0051US01
Title:	BACKWARDS RESEARCHING ACTIVITY INDICATIVE OF PESTWARE		

IN THE UNITED STATES PATENT AND TRADEMARK OFFICE

ASSERTION OF SMALL ENTITY STATUS PURSUANT TO 37 C.F.R. §1.27 (c)(1)

Mail Stop Post Issue
Commissioner for Patents
P.O. Box 1450
Alexandria, Virginia 22313-1450

Dear Commissioner:

The assignee of the above-identified application, Webroot Inc., hereby asserts that it is entitled to small entity status as defined in 37 C.F.R. 1.27.

Respectfully submitted,

Dated: September 4, 2015

/Andrew T. Pouzeshi/
Andrew T. Pouzeshi, Reg. No. 67,672
Merchant & Gould P.C.
P.O. Box 2903
Minneapolis, MN 55402-0903
(303) 357-1639

23552
PATENT TRADEMARK OFFICE

PTO/AIA/82A (07-13)
Approved for use through 11/30/2014. OMB 0651-0051
U.S. Patent and Trademark Office; U.S. DEPARTMENT OF COMMERCE
Under the Paperwork Reduction Act of 1995, no persons are required to respond to a collection of information unless it displays a valid OMB control number.

TRANSMITTAL FOR POWER OF ATTORNEY TO ONE OR MORE REGISTERED PRACTITIONERS

NOTE: This form is to be submitted with the Power of Attorney by Applicant form (PTO/AIA/82B) to identify the application to which the Power of Attorney is directed, in accordance with 37 CFR 1.5, unless the application number and filing date are identified in the Power of Attorney by Applicant form. If neither form PTO/AIA/82A nor form PTO/AIA82B identifies the application to which the Power of Attorney is directed, the Power of Attorney will not be recognized in the application.

Application Number	11/408,146
Filing Date	04-20-2006
First Named Inventor	Matthew L. Boney
Title	BACKWARDS RESEARCHING ACTIVITY INDICATIVE OF PESTWARE
Art Unit	2438
Examiner Name	RAHMAN, MAHFUZUR
Attorney Docket Number	6890-61/04584.0051US01

SIGNATURE of Applicant or Patent Practitioner

Signature	/Andrew T. Pouzeshi/	Date (Optional)	2015-09-04
Name	Andrew T. Pouzeshi	Registration Number	67672
Title (if Applicant is a juristic entity)	Attorney of Record		
Applicant Name (if Applicant is a juristic entity)	Webroot Inc.		

NOTE: This form must be signed in accordance with 37 CFR 1.33. See 37 CFR 1.4(d) for signature requirements and certifications. If more than one applicant, use multiple forms.

☑ *Total of 1 forms are submitted.

This collection of information is required by 37 CFR 1.131, 1.32, and 1.33. The information is required to obtain or retain a benefit by the public which is to file (and by the USPTO to process) an application. Confidentiality is governed by 35 U.S.C. 122 and 37 CFR 1.11 and 1.14. This collection is estimated to take 3 minutes to complete, including gathering, preparing, and submitting the completed application form to the USPTO. Time will vary depending upon the individual case. Any comments on the amount of time you require to complete this form and/or suggestions for reducing this burden, should be sent to the Chief Information Officer, U.S. Patent and Trademark Office, U.S. Department of Commerce, P.O. Box 1450, Alexandria, VA 22313-1450. DO NOT SEND FEES OR COMPLETED FORMS TO THIS ADDRESS. **SEND TO: Commissioner for Patents, P.O. Box 1450, Alexandria, VA 22313-1450.**

If you need assistance in completing the form, call 1-800-PTO-9199 and select option 2.

Doc Code: PA..
Document Description: Power of Attorney

PTO/AIA/82B (07-13)
Approved for use through 11/30/2014. OMB 0651-0051
U.S. Patent and Trademark Office; U.S. DEPARTMENT OF COMMERCE
Under the Paperwork Reduction Act of 1995, no persons are required to respond to a collection of information unless it displays a valid OMB control number

POWER OF ATTORNEY BY APPLICANT

I hereby revoke all previous powers of attorney given in the application identified in either the attached transmittal letter or the boxes below.

Application Number	Filing Date

(Note: The boxes above may be left blank if information is provided on form PTO/AIA/82A.)

☑ I hereby appoint the Patent Practitioner(s) associated with the following Customer Number as my/our attorney(s) or agent(s), and to transact all business in the United States Patent and Trademark Office connected therewith for the application referenced in the attached transmittal letter (form PTO/AIA/82A) or identified above: 23552

OR

☐ I hereby appoint Practitioner(s) named in the attached list (form PTO/AIA/82C) as my/our attorney(s) or agent(s), and to transact all business in the United States Patent and Trademark Office connected therewith for the patent application referenced in the attached transmittal letter (form PTO/AIA/82A) or identified above. (Note: Complete form PTO/AIA/82C.)

Please recognize or change the correspondence address for the application identified in the attached transmittal letter or the boxes above to:

☑ The address associated with the above-mentioned Customer Number

OR

☐ The address associated with Customer Number:

OR

Firm or Individual Name					
Address					
City		State		Zip	
Country					
Telephone		Email			

I am the Applicant (if the Applicant is a juristic entity, list the Applicant name in the box):

WEBROOT INC.

☐ Inventor or Joint Inventor (title not required below)

☐ Legal Representative of a Deceased or Legally Incapacitated Inventor (title not required below)

☑ Assignee or Person to Whom the Inventor is Under an Obligation to Assign (provide signer's title if applicant is a juristic entity)

☐ Person Who Otherwise Shows Sufficient Proprietary Interest (e.g., a petition under 37 CFR 1.46(b)(2) was granted in the application or is concurrently being filed with this document) (provide signer's title if applicant is a juristic entity)

SIGNATURE of Applicant for Patent

The undersigned (whose title is supplied below) is authorized to act on behalf of the applicant (e.g., where the applicant is a juristic entity).

Signature		Date (Optional)	May 12, 2014
Name	Ryan Howe		
Title	Associate General Counsel		

NOTE: Signature - This form must be signed by the applicant in accordance with 37 CFR 1.33. See 37 CFR 1.4 for signature requirements and certifications. If more than one applicant, use multiple forms.

☐ Total of forms are submitted.

This collection of information is required by 37 CFR 1.131, 1.32, and 1.33. The information is required to obtain or retain a benefit by the public which is to file (and by the USPTO to process) an application. Confidentiality is governed by 35 U.S.C. 122 and 37 CFR 1.11 and 1.14. This collection is estimated to take 3 minutes to complete, including gathering, preparing, and submitting the completed application form to the USPTO. Time will vary depending upon the individual case. Any comments on the amount of time you require to complete this form and/or suggestions for reducing this burden, should be sent to the Chief Information Officer, U.S. Patent and Trademark Office, U.S. Department of Commerce, P.O. Box 1450, Alexandria, VA 22313-1450. DO NOT SEND FEES OR COMPLETED FORMS TO THIS ADDRESS. SEND TO: Commissioner for Patents, P.O. Box 1450, Alexandria, VA 22313-1450.

If you need assistance in completing the form, call 1-800-PTO-9199 and select option 2.

Electronic Acknowledgement Receipt

EFS ID:	23414600
Application Number:	11408146
International Application Number:	
Confirmation Number:	8009
Title of Invention:	BACKWARDS RESEARCHING ACTIVITY INDICATIVE OF PESTWARE
First Named Inventor/Applicant Name:	Matthew L. Boney
Customer Number:	22442
Filer:	Andrew T. Pouzeshi/Elizabeth Pallardy
Filer Authorized By:	Andrew T. Pouzeshi
Attorney Docket Number:	6890-61
Receipt Date:	04-SEP-2015
Filing Date:	20-APR-2006
Time Stamp:	17:21:53
Application Type:	Utility under 35 USC 111(a)

Payment information:

Submitted with Payment	no

File Listing:

Document Number	Document Description	File Name	File Size(Bytes)/ Message Digest	Multi Part /.zip	Pages (if appl.)
1	Assertion of entitlement to small entity status	04584_0051US01_SmallEntity.PDF	70305 b9673025d143921cc4932d5872256139f85215b8	no	1

Warnings:

Information:

2	Power of Attorney	04584_0051US01_POA.PDF	408581 7bc743e4e241ce0b26b467bf735ec2039ec6d5e5	no	2

Warnings:

Information:

Total Files Size (in bytes):	478886

This Acknowledgement Receipt evidences receipt on the noted date by the USPTO of the indicated documents, characterized by the applicant, and including page counts, where applicable. It serves as evidence of receipt similar to a Post Card, as described in MPEP 503.

New Applications Under 35 U.S.C. 111
If a new application is being filed and the application includes the necessary components for a filing date (see 37 CFR 1.53(b)-(d) and MPEP 506), a Filing Receipt (37 CFR 1.54) will be issued in due course and the date shown on this Acknowledgement Receipt will establish the filing date of the application.

National Stage of an International Application under 35 U.S.C. 371
If a timely submission to enter the national stage of an international application is compliant with the conditions of 35 U.S.C. 371 and other applicable requirements a Form PCT/DO/EO/903 indicating acceptance of the application as a national stage submission under 35 U.S.C. 371 will be issued in addition to the Filing Receipt, in due course.

New International Application Filed with the USPTO as a Receiving Office
If a new international application is being filed and the international application includes the necessary components for an international filing date (see PCT Article 11 and MPEP 1810), a Notification of the International Application Number and of the International Filing Date (Form PCT/RO/105) will be issued in due course, subject to prescriptions concerning national security, and the date shown on this Acknowledgement Receipt will establish the international filing date of the application.

UNITED STATES PATENT AND TRADEMARK OFFICE

UNITED STATES DEPARTMENT OF COMMERCE
United States Patent and Trademark Office
Address: COMMISSIONER FOR PATENTS
P.O. Box 1450
Alexandria, Virginia 22313-1450
www.uspto.gov

APPLICATION NUMBER	FILING OR 371(C) DATE	FIRST NAMED APPLICANT	ATTY. DOCKET NO./TITLE
11/408,146	04/20/2006	Matthew L. Boney	WEBR-044/00US 303666-2049

CONFIRMATION NO. 8009

POA ACCEPTANCE LETTER

OC000000056934668

22442
Sheridan Ross PC
1560 Broadway
Suite 1200
Denver, CO 80202

Date Mailed: 10/09/2012

NOTICE OF ACCEPTANCE OF POWER OF ATTORNEY

This is in response to the Power of Attorney filed 10/02/2012.

The Power of Attorney in this application is accepted. Correspondence in this application will be mailed to the above address as provided by 37 CFR 1.33.

/atesfai/

Office of Data Management, Application Assistance Unit (571) 272-4000, or (571) 272-4200, or 1-888-786-0101

PTO/AIA/80 (07-12)
Approved for use through 11/30/2014. OMB 0651-0035
U.S. Patent and Trademark Office; U.S DEPARTMENT OF COMMERCE
Under the Paperwork Reduction Act of 1995, no persons are required to respond to a collection of information unless it displays a valid OMB control number.

POWER OF ATTORNEY TO PROSECUTE APPLICATIONS BEFORE THE USPTO

I hereby revoke all previous powers of attorney given in the application identified in the attached statement under 37 CFR 3.73(c).

I hereby appoint:

[■] Practitioners associated with Customer Number: 22442

OR

[ ] Practitioner(s) named below (if more than ten patent practitioners are to be named, then a customer number must be used):

Name	Registration Number	Name	Registration Number

As attorney(s) or agent(s) to represent the undersigned before the United States Patent and Trademark Office (USPTO) in connection with any and all patent applications assigned only to the undersigned according to the USPTO assignment records or assignments documents attached to this form in accordance with 37 CFR 3.73(c).

Please change the correspondence address for the application identified in the attached statement under 37 CFR 3.73(c) to:

[■] The address associated with Customer Number: 22442

OR

Firm or Individual Name			
Address			
City		State	Zip
Country			
Telephone		Email	

Assignee Name and Address: WEBROOT INC.
385 Interlocken Crescent, Ste. 800
Broomfield, Colorado 80021

A copy of this form, together with a statement under 37 CFR 3.73(c) (Form PTO/AIA/96 or equivalent) is required to be Filed in each application in which this form is used. The statement under 37 CFR 3.73(c) may be completed by one of The practitioners appointed in this form, and must identify the application in which this Power of Attorney is to be filed.

SIGNATURE of Assignee of Record

The individual whose signature and title is supplied below is authorized to act on behalf of the assignee

Signature	David Huberman	Date	1 OCT 2012
Name	David Huberman, Esq.	Telephone	720-842-3627
Title	General Counsel		

This collection of information is required by 37 CFR 1.31, 1.32 and 1.33. The information is required to obtain or retain a benefit by the public which is to file (and by the USPTO to process) an application. Confidentiality is governed by 35 U.S.C. 122 and 37 CFR 1.11 and 1.14. This collection is estimated to take 3 minutes to complete, including gathering, preparing, and submitting the completed application form to the USPTO. Time will vary depending upon the individual case. Any comments on the amount of time you require to complete this form and/or suggestions for reducing this burden, should be sent to the Chief Information Officer, U.S. Patent and Trademark Office, U.S. Department of Commerce, P.O. Box 1450, Alexandria, VA 22313-1450. DO NOT SEND FEES OR COMPLETED FORMS TO THIS ADDRESS. **SEND TO: Commissioner for Patents, P.O. Box 1450, Alexandria, VA 22313-1450.**

If you need assistance in completing the form, call 1-800-PTO-9199 and select option 2.

Electronic Acknowledgement Receipt

EFS ID:	13889064
Application Number:	11408146
International Application Number:	
Confirmation Number:	8009
Title of Invention:	BACKWARDS RESEARCHING ACTIVITY INDICATIVE OF PESTWARE
First Named Inventor/Applicant Name:	Matthew L. Boney
Customer Number:	22903
Filer:	Bradley M. Knepper/Erica Picard
Filer Authorized By:	Bradley M. Knepper
Attorney Docket Number:	WEBR-044/00US 303666-2049
Receipt Date:	02-OCT-2012
Filing Date:	20-APR-2006
Time Stamp:	12:10:01
Application Type:	Utility under 35 USC 111(a)

Payment information:

Submitted with Payment	no

File Listing:

Document Number	Document Description	File Name	File Size(Bytes)/ Message Digest	Multi Part /.zip	Pages (if appl.)
1	Assignee showing of ownership per 37 CFR 3.73.	Statement.pdf	119874 211672bdf06327a5fccc8184de535bd18a464523	no	3

Warnings:

Information:

2	Power of Attorney	POA.pdf	59485 68e3501600681cf461a6a1ad6257bc47dc71e26d	no	1

Warnings:

Information:

Total Files Size (in bytes):	179359

This Acknowledgement Receipt evidences receipt on the noted date by the USPTO of the indicated documents, characterized by the applicant, and including page counts, where applicable. It serves as evidence of receipt similar to a Post Card, as described in MPEP 503.

New Applications Under 35 U.S.C. 111
If a new application is being filed and the application includes the necessary components for a filing date (see 37 CFR 1.53(b)-(d) and MPEP 506), a Filing Receipt (37 CFR 1.54) will be issued in due course and the date shown on this Acknowledgement Receipt will establish the filing date of the application.

National Stage of an International Application under 35 U.S.C. 371
If a timely submission to enter the national stage of an international application is compliant with the conditions of 35 U.S.C. 371 and other applicable requirements a Form PCT/DO/EO/903 indicating acceptance of the application as a national stage submission under 35 U.S.C. 371 will be issued in addition to the Filing Receipt, in due course.

New International Application Filed with the USPTO as a Receiving Office
If a new international application is being filed and the international application includes the necessary components for an international filing date (see PCT Article 11 and MPEP 1810), a Notification of the International Application Number and of the International Filing Date (Form PCT/RO/105) will be issued in due course, subject to prescriptions concerning national security, and the date shown on this Acknowledgement Receipt will establish the international filing date of the application.

Under the Paperwork Reduction Act of1995, no persons arerequired to respond to a collection of information unless it displays a valid OMB control number.

STATEMENT UNDER 37 CFR 3.73(c)

Applicant/Patent Owner: Webroot Inc.

Application No./Patent No.: 8,201,243 Filed/Issue Date: 2012-06-12

Titled: BACKWARDS RESEARCHING ACTIVITY INDICATIVE OF PESTWARE

Webroot Inc., a Corporation

(Name of Assignee) (Type of Assignee, e.g., corporation, partnership, university, government agency, etc.)

states that, for the patent application/patent identified above, it is (choose **one** of options 1, 2, 3 or 4 below):

1. ☑ The assignee of the entire right, title, and interest.

2. ☐ An assignee of less than the entire right, title, and interest (check applicable box):

☐ The extent (by percentage) of its ownership interest is _____%. Additional Statement(s) by the owners holding the balance of the interest must be submitted to account for 100% of the ownership interest.

☐ There are unspecified percentages of ownership. The other parties, including inventors, who together own the entire right, title and interest are:

Additional Statement(s) by the owner(s) holding the balance of the interest must be submitted to account for the entire right, title, and interest.

3. ☐ The assignee of an undivided interest in the entirety (a complete assignment from one of the joint inventors was made). The other parties, including inventors, who together own the entire right, title, and interest are:

Additional Statement(s) by the owner(s) holding the balance of the interest must be submitted to account for the entire right, title, and interest.

4. ☐ The recipient, via a court proceeding or the like (*e.g.*, bankruptcy, probate), of an undivided interest in the entirety (a complete transfer of ownership interest was made). The certified document(s) showing the transfer is attached.

The interest identified in option 1, 2 or 3 above (not option 4) is evidenced by either (choose **one** of options A or B below):

A. ☐ An assignment from the inventor(s) of the patent application/patent identified above. The assignment was recorded in the United States Patent and Trademark Office at Reel _____, Frame _____, or for which a copy thereof is attached.

B. ☑ A chain of title from the inventor(s), of the patent application/patent identified above, to the current assignee as follows:

1. From: Matthew L. Boney To: Webroot Software, Inc.

The document was recorded in the United States Patent and Trademark Office at Reel 017977, Frame 0663, or for which a copy thereof is attached.

2. From: Webroot Software, Inc. To: Webroot Inc.

The document was recorded in the United States Patent and Trademark Office at Reel 028953, Frame 0917, or for which a copy thereof is attached.

This collection of information is required by37 CFR3.73(b). The information is required toobtain or retain a benefit by the public which is to file (and by the USPTO to process) an application. Confidentialityis governed by35 U.S.C. 122and 37 CFR1.11 and1.14. Thiscollection is estimated to take 12 minutes to complete, including gathering, preparing, and submittingthe completed application form to the USPTO.Time will vary depending upon the individual case. Any comments on the amount of time you require to complete this form and/or suggestions for reducing this burden, should be sent tothe Chief Information Officer, U.S. Patent and Trademark Office, U.S. Department of Commerce, P.O. Box 1450, Alexandria, VA 22313-1450. DO NOT SEND FEES OR COMPLETED FORMS TO THIS ADDRESS.**SEND TO: Commissioner for Patents, P.O. Box 1450, Alexandria, VA 22313-1450**

If you need assistance in completing the form, call 1-800-PTO-9199 and select option 2.

Under the Paperwork Reduction Act of 1995, no persons are required to respond to a collection of information unless it displays a valid OMB control number.

STATEMENT UNDER 37 CFR 3.73(c)

3. From: _____ To: _____

The document was recorded in the United States Patent and Trademark Office at

Reel _____, Frame _____, or for which a copy thereof is attached.

4. From: _____ To: _____

The document was recorded in the United States Patent and Trademark Office at

Reel _____, Frame _____, or for which a copy thereof is attached.

5. From: _____ To: _____

The document was recorded in the United States Patent and Trademark Office at

Reel _____, Frame _____, or for which a copy thereof is attached.

6. From: _____ To: _____

The document was recorded in the United States Patent and Trademark Office at

Reel _____, Frame _____, or for which a copy thereof is attached.

☐ Additional documents in the chain of title are listed on a supplemental sheet(s).

☑ As required by 37 CFR 3.73(c)(1)(i), the documentary evidence of the chain of title from the original owner to the assignee was, or concurrently is being, submitted for recordation pursuant to 37 CFR 3.11.

[NOTE: A separate copy (i.e., a true copy of the original assignment document(s)) must be submitted to Assignment Division in accordance with 37 CFR Part 3, to record the assignment in the records of the USPTO. See MPEP 302.08]

The undersigned (whose title is supplied below) is authorized to act on behalf of the assignee.

/Bradley M. Knepper/	2012-10-02
Signature	Date
Bradley M. Knepper	44,189
Printed or Typed Name	Title or Registration Number

Privacy Act Statement

The **Privacy Act of 1974 (P.L. 93-579)** requires that yoube given certain informationin connection with your submission of the attached form related to a patent application or patent. Accordingly, pursuant to the requirements of the Act, pleasebe advised that: (1) the general authority forthe collection of thisinformation is 35 U.S.C. 2(b)(2); (2) furnishing of the information solicited is voluntary; and(3) the principal purpose forwhich the information isused by the U.S. Patent and Trademark Office is to process and/or examine your submission related to a patent applicationor patent. If you do not furnish the requested information,the U.S. Patent and Trademark Office may not be able to process and/or examineyour submission,which may result in termination of proceedings or abandonment of the applicationor expiration of the patent.

The informationprovided by you in this form will be subject to the following routine uses:

1. The information on this form will be treated confidentially to the extent allowed under the Freedom of Information Act (5 U.S.C. 552) and the Privacy Act (5 U.S.C 552a). Records from this system of records may be disclosed to the Department of Justice to determine whether disclosure of these records is required by the Freedom of Information Act.
2. A record from this system of records may be disclosed, as a routine use, in the course of presenting evidence to a court, magistrate, or administrative tribunal, including disclosures to opposing counsel in the course of settlement negotiations.
3. A record in this system of records may be disclosed, as a routine use, to a Member of Congress submitting a request involving an individual, to whom the record pertains, when the individual has requested assistance from the Member with respect to the subject matter of the record.
4. A record in this system of records may be disclosed, as a routine use, to a contractor of the Agency having need for the informationin order to perform a contract. Recipients of information shall be required to comply with the requirements of the Privacy Act of 1974, as amended, pursuant to 5 U.S.C. 552a(m).
5. A record related to an InternationalApplication filed under the Patent Cooperation Treaty in this system of records may be disclosed, as a routine use, to the International Bureau of the World Intellectual Property Organization, pursuant to the Patent Cooperation Treaty.
6. A record in this system of records may be disclosed, as a routine use, to another federal agency for purposes of National Security review (35 U.S.C. 181) and for review pursuant to the Atomic Energy Act (42 U.S.C. 218(c)).
7. A record from this system of records may be disclosed, as a routine use, to the Administrator, General Services, or his/her designee, during an inspection of records conducted by GSA as part of that agency's responsibility to recommend improvements in records management practices and programs, under authority of 44 U.S.C. 2904 and 2906. Such disclosure shall be made in accordance with the GSA regulations governing inspection of records for this purpose, and any other relevant (*i.e.*, GSA or Commerce) directive. Such disclosure shall not be used to make determinations about individuals.
8. A record from this system of records may be disclosed, as a routine use, to the public after either publication of the application pursuant to 35 U.S.C. 122(b) or issuance of a patent pursuant to 35 U.S.C. 151. Further, arecord may be disclosed, subject to the limitations of 37 CFR 1.14, as a routine use, to the public if the record was filed in an application which became abandoned or in which the proceedings were terminated and which application is referenced by either a published application, an application open to public inspection or an issued patent.
9. A record from thissystem of records may be disclosed, as a routine use, to a Federal, State, or local law enforcement agency, if the USPTO becomes aware of a violation or potential violation of law or regulation.

PTO/SB/83 (11-08)
Approved for use through 11/30/2011. OMB 0651-0035
U.S. Patent and Trademark Office, U.S. DEPARTMENT OF COMMERCE
Under the Paperwork Reduction Act of 1995, no persons are required to respond to a collection of information unless it displays a valid OMB control number.

REQUEST FOR WITHDRAWAL AS ATTORNEY OR AGENT AND CHANGE OF CORRESPONDENCE ADDRESS

Application Number	SEE SCHEDULE A
Filing Date	SEE SCHEDULE A
First Named Inventor	SEE SCHEDULE A
Art Unit	SEE SCHEDULE A
Examiner Name	SEE SCHEDULE A
Attorney Docket Number	SEE SCHEDULE A

To: Commissioner for Patents
P.O. Box 1450
Alexandria, VA 22313-1450

Please withdraw me as attorney or agent for the above identified patent application, and

- [x] all the practitioners of record;
- [ ] the practitioners (with registration numbers) of record listed on the attached paper(s); or
- [ ] the practitioners of record associated with Customer Numbers: 58249 and 22903

NOTE: The immediately preceding box should only be marked when the practitioners were appointed using the listed Customer Number.

The reason(s) for this request are those described in 37 CFR :

[ ] 10.40(b)(1)	[ ] 10.40(b)(2)	[ ] 10.40(b)(3)	[x] 10.40(b)(4)
[ ] 10.40(c)(1)(i)	[ ] 10.40(c)(1)(ii)	[ ] 10.40(c)(1)(iii)	[ ] 10.40(c)(1)(iv)
[ ] 10.40(c)(1)(v)	[ ] 10.40(c)(1)(vi)	[ ] 10.40(c)(2)	[ ] 10.40(c)(3)
[ ] 10.40(c)(4)	[ ] 10.40(c)(5)	[ ] 10.40(c)(6). Please explain below:	

Certifications

Check each box below that is factually correct. WARNING: If a box is left unchecked, the request will likely not be approved.

1. [x] I/We have given reasonable notice to the client, prior to the expiration of the response period, that the practitioner(s) intend to withdraw from employment.

2. [x] I/We have delivered to the client or a duly authorized representative of the client all papers and property (including funds) to which the client is entitled.

3. [x] I/We have notified the client of any responses that may be due and the time frame within which the client must respond.

Please provide an explanation, if necessary:
SEE ATTACHED LETTER FROM WEBROOT, INC. REQUESTING TRANSFER OF FILES.

This collection of information is required by 37 CFR 1.36. The information is required to obtain or retain a benefit by the public which is to file (and by the USPTO to process) an application. Confidentiality is governed by 35 U.S.C. 122 and 37 CFR 1.11 and 1.14. This collection is estimated to take 12 minutes to complete, including gathering, preparing, and submitting the completed application form to the USPTO. Time will vary depending upon the individual case. Any comments on the amount of time you require to complete this form and/or suggestions for reducing this burden, should be sent to the Chief Information Officer, U.S. Patent and Trademark Office, U.S. Department of Commerce, P.O. Box 1450, Alexandria, VA 22313-1450. DO NOT SEND FEES OR COMPLETED FORMS TO THIS ADDRESS. **SEND TO: Commissioner for Patents, P.O. Box 1450, Alexandria, VA 22313-1450.**

If you need assistance in completing the form, call 1-800-PTO-9199 and select option 2.

American LegalNet, Inc.
www.FormsWorkflow.com

PTO/SB/83 (11-08)
Approved for use through 11/30/2011. OMB 0651-0035
U.S. Patent and Trademark Office, U.S. DEPARTMENT OF COMMERCE
Under the Paperwork Reduction Act of 1995, no persons are required to respond to a collection of information unless it displays a valid OMB control number.

REQUEST FOR WITHDRAWAL AS ATTORNEY OR AGENT AND CHANGE OF CORRESPONDENCE ADDRESS

Complete the following section only when the correspondence address will change. *Changes of address will only be accepted to an inventor or an assignee that has properly made itself of record pursuant to 37 CFR 3.71.*

Change the correspondence address and direct all future correspondence to:

A. ☐ The address of the inventor or assignee associated with Customer Number:

OR

B. ☒ Inventor or Assignee name	Webroot, Inc. c/o Sheridan Ross
Address	1560 Broadway, Suite 1200

City Denver	State CO	Zip 80202	Country US
Telephone 303-863-9700		Email rbrunelli@sheridanross.com	

I am authorized to sign on behalf of myself and all withdrawing practitioners.

Signature			
Name	Mark R. Schafer	Registration No. 65,336	
Address	777 6th Street NW, Ste. 1100		
City Washington	State DC	Zip 20001	Country UA
Date	2012-09-20	Telephone No. 720 566-4044	

NOTE: ***Withdrawal is effective when approved rather than when received.***

This collection of information is required by 37 CFR 1.36. The information is required to obtain or retain a benefit by the public which is to file (and by the USPTO to process) an application. Confidentiality is governed by 35 U.S.C. 122 and 37 CFR 1.11 and 1.14. This collection is estimated to take 12 minutes to complete, including gathering, preparing, and submitting the completed application form to the USPTO. Time will vary depending upon the individual case. Any comments on the amount of time you require to complete this form and/or suggestions for reducing this burden, should be sent to the Chief Information Officer, U.S. Patent and Trademark Office, U.S. Department of Commerce, P.O. Box 1450, Alexandria, VA 22313-1450. DO NOT SEND FEES OR COMPLETED FORMS TO THIS ADDRESS. **SEND TO: Commissioner for Patents, P.O. Box 1450, Alexandria, VA 22313-1450.**

If you need assistance in completing the form, call 1-800-PTO-9199 and select option 2.

American LegalNet, Inc.
www.FormsWorkflow.com

SCHEDULE A

Application No.	Application Date	Inventor	Group Art Unit	Examiner	Cooley Docket No.	Conf. No.
11/031,615	Jan-07-2005	THOMAS	2163	LE, Uyen	WEBR-001/01US 303666-2010	3544
10/956,573	Oct-01-2004	THOMAS	2162	Alam, Shahid	WEBR-003/00US 303666-2004	7086
10/956,274	Oct-01-2004	BERTMAN	2135	Truong, Thanhnga B.	WEBR-004/00US 303666-2008	6861
10/956,574	Oct-01-2004	THOMAS	2162	BULLOCK, Joshua	WEBR-005/00US 303666-2007	7085
11/104,201	Apr-12-2005	BURTSCHER	2167	KIM, Chong	WEBR-010/00US 303666-2014	1307
11/104,202	Apr-12-2005	BURTSCHER	2436	CERVETTI, David G.	WEBR-011/00US 303666-2011	1284
11/462,827	Aug-07-2006	SCHNEIDER	2438	LANE, Gregory A.	WEBR-023/00US 303666-2024	5954
13/460,655	Apr-30-2012	SCHNEIDER	2431		WEBR-023/01US 303666-2124	9502
11/145,592	Jun-06-2005	NICHOLS	2167	UDDIN, Mohammed	WEBR-024/00US 303666-2027	4495
11/258,536	Oct-25-2005	MOOD	2432	PERUNGAVOOR, Venkatanaray	WEBR-026/00US 303666-2028	2648
11/334,318	Jan-18-2006	HORNE	4144	WATSON, Joshua C.	WEBR-033/00US 303666-2038	6611
11/334,307	Jan-18-2006	HORNE	2431	ZIA, Syed	WEBR-034/00US 303666-2039	6605
11/334,317	Jan-18-2006	HORNE	2431	Avery, Jeremiah L.	WEBR-035/00US 303666-2040	6608
11/460,032	Jul-26-2006	BURTSCHER	2439	OLION, Brian L.	WEBR-037/00US 303666-2042	1341
11/386,595	Mar-22-2006	NICHOLS	2439	LE, Canh	WEBR-038/00US 303666-2046	4954
11/386,590	Mar-22-2006	NICHOLS	2195	WAI, Eric Charles	WEBR-039/00US 303666-2045	4944
11/386,594	Mar-22-2006	NICHOLS	2189	Peikari, Behzad	WEBR-040/00US 303666-2044	4951
11/408,146	Apr-20-2006	BONEY	2438	RAHMAN, Mahfuzur	WEBR-044/00US 303666-2049	8009
13/490,294	Jun-06-2012	BONEY	2431		WEBR-044/01US 303666-2126	1064
11/408,145	Apr-20-2006	BONEY	2438	RAHMAN, Mahfuzur	WEBR-045/00US 303666-2050	8007
13/460,648	Apr-30-2012	BONEY	2431		WEBR-045/01US 303666-2125	8780
11/482,903	Jul-07-2006	SPROWLS	2438	Truong, Thanhnga B.	WEBR-057/00US 303666-2069	6773
13/184,925	Jul-18-2011	SPROWLS	2438	Truong, Thanhnga B.	WEBR-057/01US 303666-2121	1361
13/184,931	Jul-18-2011	SPROWLS	2438	Truong, Thanhnga B.	WEBR-057/02US 303666-2122	1371
11/465,680	Aug-18-2006	WANG	2115	Connolly, Mark A.	WEBR-059/00US 303666-2065	1654
12/829,749	Jul-02-2010	WANG	2115	Connolly, Mark A.	WEBR-059/01US 303666-2119	9140
12/830,021	Jul-02-2010	WANG	2115	Connolly, Mark A.	WEBR-059/02US 303666-2120	9668
13/413,391	Mar-06-2012	WANG	2115		WEBR-059/03US 303666-2123	7167
11/462,943	Aug-07-2006	BURTSCHER	2438	LANE, Gregory A.	WEBR-060/00US 303666-2067	6147
11/462,956	Aug-07-2006	BURTSCHER	2197	DAS, Chameli	WEBR-061/00US 303666-2070	6168
11/462,781	Aug-07-2006	MCCLOY	2442		WEBR-063/00US 303666-2066	5887
12/236,419	Sep-23-2008	ADAMS	2491	SHAW, Brian F	WEBR-072/00US 303666-2108	7849

Webroot
385 Interlocken Crescent Boulevard
Suite 800
Broomfield, CO 80021
Toll-Free: 800.870.8102
www.webroot.com

July 17, 2012

BY EMAIL

Wayne O. Stacy, Esq.
Cooley LLP
380 Interlocken Crescent
Suite 900
Broomfield, CO 80021

RE: Engagement of Sheridan Ross P.C.

Dear Wayne:

As you and I discussed recently, Webroot Inc. has elected to consolidate its intellectual property prosecution work with Sheridan Ross P.C. Accordingly, I write to request that you arrange for the items listed below to be forwarded Sheridan Ross as soon as possible:

- Lists of all patent, trademark, and copyright matters your firm has handled – and is currently handling – for Webroot;
- A docket report for each patent, trademark, and copyright matter detailing upcoming deadlines through December 31, 2012;
- Physical files for each patent, trademark, and copyright matter;
- Electronic files for each patent, trademark, and copyright matter, if available; and
- A master list of all items forwarded to Sheridan Ross.

All items should be sent to the attention of Robert Brunelli, 1560 Broadway, Suite 1200, Denver, Colorado 80202; rbrunelli@sheridanross.com.

Webroot anticipates that the fees/costs associated with providing the foregoing materials to Sheridan Ross will be minimal, and in no event will exceed $500 per docket. If you expect fees/costs greater than that amount, please contact me immediately.

Please note that you need not notify foreign associates of Webroot's engagement of Sheridan Ross. Sheridan Ross will handle those notifications.

Thank you for your attention to this matter.

Sincerely,

David Huberman
General Counsel
Webroot Inc.

Electronic Acknowledgement Receipt

EFS ID:	13800862
Application Number:	11408146
International Application Number:	
Confirmation Number:	8009
Title of Invention:	BACKWARDS RESEARCHING ACTIVITY INDICATIVE OF PESTWARE
First Named Inventor/Applicant Name:	Matthew L. Boney
Customer Number:	22903
Filer:	Mark Randolph Schafer/Sherry Bitler
Filer Authorized By:	Mark Randolph Schafer
Attorney Docket Number:	WEBR-044/00US 303666-2049
Receipt Date:	20-SEP-2012
Filing Date:	20-APR-2006
Time Stamp:	18:29:11
Application Type:	Utility under 35 USC 111(a)

Payment information:

Submitted with Payment	no

File Listing:

Document Number	Document Description	File Name	File Size(Bytes)/ Message Digest	Multi Part /.zip	Pages (if appl.)
1	Change of Address	WEBR-Req2Withdraw.pdf	282148 8bb7d27bcb066b34eeeca860249160c928194588	no	4

Warnings:

Information:

Total Files Size (in bytes):	282148

This Acknowledgement Receipt evidences receipt on the noted date by the USPTO of the indicated documents, characterized by the applicant, and including page counts, where applicable. It serves as evidence of receipt similar to a Post Card, as described in MPEP 503.

New Applications Under 35 U.S.C. 111
If a new application is being filed and the application includes the necessary components for a filing date (see 37 CFR 1.53(b)-(d) and MPEP 506), a Filing Receipt (37 CFR 1.54) will be issued in due course and the date shown on this Acknowledgement Receipt will establish the filing date of the application.

National Stage of an International Application under 35 U.S.C. 371
If a timely submission to enter the national stage of an international application is compliant with the conditions of 35 U.S.C. 371 and other applicable requirements a Form PCT/DO/EO/903 indicating acceptance of the application as a national stage submission under 35 U.S.C. 371 will be issued in addition to the Filing Receipt, in due course.

New International Application Filed with the USPTO as a Receiving Office
If a new international application is being filed and the international application includes the necessary components for an international filing date (see PCT Article 11 and MPEP 1810), a Notification of the International Application Number and of the International Filing Date (Form PCT/RO/105) will be issued in due course, subject to prescriptions concerning national security, and the date shown on this Acknowledgement Receipt will establish the international filing date of the application.

UNITED STATES PATENT AND TRADEMARK OFFICE

UNITED STATES DEPARTMENT OF COMMERCE
United States Patent and Trademark Office
Address: COMMISSIONER FOR PATENTS
P.O. Box 1450
Alexandria, Virginia 22313-1450
www.uspto.gov

APPLICATION NO.	ISSUE DATE	PATENT NO.	ATTORNEY DOCKET NO.	CONFIRMATION NO.
11/408,146	06/12/2012	8201243	WEBR-044/00US 303666-2049	8009

22903 7590 05/23/2012

COOLEY LLP
ATTN: PATENT GROUP
Suite 1100
777 - 6th Street, NW
WASHINGTON, DC 20001

ISSUE NOTIFICATION

The projected patent number and issue date are specified above.

Determination of Patent Term Adjustment under 35 U.S.C. 154 (b)
(application filed on or after May 29, 2000)

The Patent Term Adjustment is 1150 day(s). Any patent to issue from the above-identified application will include an indication of the adjustment on the front page.

If a Continued Prosecution Application (CPA) was filed in the above-identified application, the filing date that determines Patent Term Adjustment is the filing date of the most recent CPA.

Applicant will be able to obtain more detailed information by accessing the Patent Application Information Retrieval (PAIR) WEB site (http://pair.uspto.gov).

Any questions regarding the Patent Term Extension or Adjustment determination should be directed to the Office of Patent Legal Administration at (571)-272-7702. Questions relating to issue and publication fee payments should be directed to the Application Assistance Unit (AAU) of the Office of Data Management (ODM) at (571)-272-4200.

APPLICANT(s) (Please see PAIR WEB site http://pair.uspto.gov for additional applicants):

Matthew L. Boney, Longmont, CO;

Please type a plus sign (+) inside this box ➔ +

PTO/SB/08A (08-00)

Substitute for form 1449A/PTO		Complete if Known	
INFORMATION DISCLOSURE STATEMENT BY APPLICANT		Application Number	11/408,146
		Filing Date	04/20/2006
		First Named Inventor	Matthew L. Boney
		Group Art Unit	2154
(*use as many sheets as necessary*)		Examiner Name	Not Yet Assigned
Sheet	2 of 3	Attorney Docket Number	WEBR-044/00US

U.S. PATENT DOCUMENTS

Examiner Initials*	Cite No.[1]	U.S. Patent Document Number	Kind Code[2] (*if known*)	Name of Patentee or Applicant of Cited Document	Date of Publication of Cited Document MM-DD-YYYY
		US 2004/0187023	A1	ALAGNA, MICHAEL ANTHONY, ET AL.	09/23/04
		US 2004/0225877	A1	HUANG	11/11/04
		US 2005/0038697	A1	~~JEFFREY~~ Aaron	02/2005
		US 2005/0154885		VISCOMI ET AL.	07/2005
		US 2005/0138433	A1	LINETSKY, GENE	06/23/05
		10/956,573		STEVE THOMAS	N/A Filed: 10/01/04
		10/956,574		STEVE THOMAS	N/A Filed: 10/01/04
		10/956,818		MATTHEW BONEY	N/A Filed: 10/01/04
		11/257,609		MICHAEL BURTSCHER	N/A Filed: 10/25/05
		11/237,291		PHILIP MADDALONI	N/A Filed: 09/28/05
		11/408,215		MATTHEW BONEY	N/A Filed: 04/20/06
		11/408,145		MATTHEW BONEY	N/A Filed: 04/20/06

Change(s) applied to document /M.F.O./ 3/22/2012

Examiner Signature	/Mahfuzur Rahman/	Date Considered	02/13/2010

*EXAMINER: Initial if reference considered, whether or not citation is in conformance with MPEP 609. Draw line through citation if not in conformance and not considered. Include copy of this form with next communication to applicant.

[1] Unique citation designation number.
[2] See attached Kinds of U.S. Patent Documents.

ALL REFERENCES CONSIDERED EXCEPT WHERE LINED THROUGH. /M.R./

PART B - FEE(S) TRANSMITTAL

Complete and send this form, together with applicable fee(s), to: eFax Mail Stop ISSUE FEE
Commissioner for Patents
P.O. Box 1450
Alexandria, Virginia 22313-1450
or Fax (571)-273-2885

INSTRUCTIONS: This form should be used for transmitting the ISSUE FEE and PUBLICATION FEE (if required). Blocks 1 through 5 should be completed where appropriate. All further correspondence including the Patent, advance orders and notification of maintenance fees will be mailed to the current correspondence address as indicated unless corrected below or directed otherwise in Block 1, by (a) specifying a new correspondence address; and/or (b) indicating a separate "FEE ADDRESS" for maintenance fee notifications.

CURRENT CORRESPONDENCE ADDRESS (Note: Use Block 1 for any change of address)

22903 7590 02/09/2012

COOLEY LLP

ATTN: PATENT DEPT

Suite 1100

777 - 6th Street, NW

WASHINGTON, DC 20001

APPLICATION NO.	FILING DATE	FIRST NAMED INVENTOR	ATTORNEY DOCKET NO.	CONFIRMATION NO.
11/408,146	04/20/2006	BONEY, Matthew L.	WEBR-044/00US 303666-2049	8009

TITLE OF INVENTION:
BACKWARDS RESEARCHING ACTIVITY INDICATIVE OF PESTWARE

APPLN. TYPE	SMALL ENTITY	ISSUE FEE DUE	PUBLICATION FEE DUE	PREV. PAID ISSUE FEE	TOTAL FEE(S) DUE	DATE DUE
nonprovisional	NO	$1740	$300	$0	$2040	05/09/2012

EXAMINER	ART UNIT	CLASS-SUBCLASS
RAHMAN, Mahfuzur	2438	726-022000

1. Change of correspondence address or indication of "Fee Address" (37 CFR 1.363).
☐ Change of correspondence address (or Change of Correspondence Address form PTO/SB/122) attached.
☐ "Fee Address" indication (or "Fee Address" Indication form PTO/SB/47; Rev 03-02 or more recent) attached. **Use of a Customer Number is required.**

2. For printing on the patent front page, list
(1) the names of up to 3 registered patent attorneys or agents OR, alternatively,
(2) the name of a single firm (having as a member a registered attorney or agent) and the names of up to 2 registered patent attorneys or agents. If no name is listed, no name will be printed.

1 COOLEY LLP
2
3

3. ASSIGNEE NAME AND RESIDENCE DATA TO BE PRINTED ON THE PATENT (print or type)

PLEASE NOTE: Unless an assignee is identified below, no assignee data will appear on the patent. If an assignee is identified below, the document has been filed for recordation as set forth in 37 CFR 3.11. Completion of this form is NOT a substitute for filing an assignment.

(A) NAME OF ASSIGNEE
Webroot Inc.

(B) RESIDENCE: (CITY and STATE OR COUNTRY)
Broomfield CO

Please check the appropriate assignee category or categories (will not be printed on the patent) : ☐ Individual ☒ Corporation or other private group entity ☐ Government

4a. The following fee(s) are submitted:
☒ Issue Fee
☒ Publication Fee (No small entity discount permitted)
☐ Advance Order - # of Copies _____

4b. Payment of Fee(s): **(Please first reapply any previously paid issue fee shown above)**
☐ A check is enclosed.
☐ Payment by credit card. Form PTO-2038 is attached.
☒ The Director is hereby authorized to charge the required fee(s), any deficiency, or credit any overpayment, to Deposit Account Number 50-1283 (enclose an extra copy of this form).

5. **Change in Entity Status** (from status indicated above)
☐ a. Applicant claims SMALL ENTITY status. See 37 CFR 1.27. ☐ b. Applicant is no longer claiming SMALL ENTITY status. See 37 CFR 1.27(g)(2).

NOTE: The Issue Fee and Publication Fee (if required) will not be accepted from any one other than the applicant; a registered attorney or agent; or the assignee or other party in interest as shown by the records of the United States Patent and Trademark Office.

Authorized Signature /Mark R. Schafer/ Date 05/09/2012

Typed or printed name Mark R. Schafer Registration No. 65336

This collection of information is required by 37 CFR 1.311 . The information is required to obtain or retain a benefit by the public which is to file (and by the USPTO to process) an application. Confidentiality is governed by 35 U.S.C. 122 and 37 CFR 1.14. This collection is estimated to take 12 minutes to complete, including gathering, preparing, and submitting the completed application form to the USPTO. Time will vary depending upon the individual case. Any comments on the amount of time you require to complete this form and/or suggestions for reducing this burden, should be sent to the Chief Information Officer, U.S. Patent and Trademark Office, U.S. Department of Commerce, P.O. Box 1450, Alexandria, Virginia 22313-1450. DO NOT SEND FEES OR COMPLETED FORMS TO THIS ADDRESS. SEND TO: Commissioner for Patents, P.O. Box 1450, Alexandria, Virginia 22313-1450.
Under the Paperwork Reduction Act of 1995, no persons are required to respond to a collection of information unless it displays a valid OMB control number.

Electronic Patent Application Fee Transmittal

Application Number:	11408146
Filing Date:	20-Apr-2006
Title of Invention:	BACKWARDS RESEARCHING ACTIVITY INDICATIVE OF PESTWARE
First Named Inventor/Applicant Name:	Matthew L. Boney
Filer:	Mark Randolph Schafer/Sherry Bitler
Attorney Docket Number:	WEBR-044/00US 303666-2049

Filed as Large Entity

Utility under 35 USC 111(a) Filing Fees

Description	Fee Code	Quantity	Amount	Sub-Total in USD($)
Basic Filing:				
Pages:				
Claims:				
Miscellaneous-Filing:				
Petition:				
Patent-Appeals-and-Interference:				
Post-Allowance-and-Post-Issuance:				
Utility Appl issue fee	1501	1	1740	1740
Publ. Fee- early, voluntary, or normal	1504	1	300	300

Description	Fee Code	Quantity	Amount	Sub-Total in USD($)
Extension-of-Time:				
Miscellaneous:				
			Total in USD ($)	**2040**

Electronic Acknowledgement Receipt

EFS ID:	12740938
Application Number:	11408146
International Application Number:	
Confirmation Number:	8009
Title of Invention:	BACKWARDS RESEARCHING ACTIVITY INDICATIVE OF PESTWARE
First Named Inventor/Applicant Name:	Matthew L. Boney
Customer Number:	22903
Filer:	Mark Randolph Schafer/Sherry Bitler
Filer Authorized By:	Mark Randolph Schafer
Attorney Docket Number:	WEBR-044/00US 303666-2049
Receipt Date:	09-MAY-2012
Filing Date:	20-APR-2006
Time Stamp:	17:08:20
Application Type:	Utility under 35 USC 111(a)

Payment information:

Submitted with Payment	yes
Payment Type	Deposit Account
Payment was successfully received in RAM	$2040
RAM confirmation Number	4051
Deposit Account	501283
Authorized User	
The Director of the USPTO is hereby authorized to charge indicated fees and credit any overpayment as follows:	
Charge any Additional Fees required under 37 C.F.R. Section 1.17 (Patent application and reexamination processing fees)	

File Listing:

Document Number	Document Description	File Name	File Size(Bytes)/ Message Digest	Multi Part /.zip	Pages (if appl.)
1	Issue Fee Payment (PTO-85B)	WEBR04400US_Part_B_Issue_Fee_Transmittal.pdf	110115 ea1bcf5f76e68ec7a776acd50091cedfcbbf83f7	no	1
Warnings:					
Information:					
2	Fee Worksheet (SB06)	fee-info.pdf	32497 d1cd20df6ba79f079865790034010af654b032b0	no	2
Warnings:					
Information:					
			Total Files Size (in bytes):	142612	

This Acknowledgement Receipt evidences receipt on the noted date by the USPTO of the indicated documents, characterized by the applicant, and including page counts, where applicable. It serves as evidence of receipt similar to a Post Card, as described in MPEP 503.

New Applications Under 35 U.S.C. 111
If a new application is being filed and the application includes the necessary components for a filing date (see 37 CFR 1.53(b)-(d) and MPEP 506), a Filing Receipt (37 CFR 1.54) will be issued in due course and the date shown on this Acknowledgement Receipt will establish the filing date of the application.

National Stage of an International Application under 35 U.S.C. 371
If a timely submission to enter the national stage of an international application is compliant with the conditions of 35 U.S.C. 371 and other applicable requirements a Form PCT/DO/EO/903 indicating acceptance of the application as a national stage submission under 35 U.S.C. 371 will be issued in addition to the Filing Receipt, in due course.

New International Application Filed with the USPTO as a Receiving Office
If a new international application is being filed and the international application includes the necessary components for an international filing date (see PCT Article 11 and MPEP 1810), a Notification of the International Application Number and of the International Filing Date (Form PCT/RO/105) will be issued in due course, subject to prescriptions concerning national security, and the date shown on this Acknowledgement Receipt will establish the international filing date of the application.

Examiner-Initiated Interview Summary	Application No.	Applicant(s)	
	11/408,146	BONEY, MATTHEW L.	
	Examiner	Art Unit	
	MAHFUZUR RAHMAN	2438	

All participants (applicant, applicant's representative, PTO personnel):

(1) *MAHFUZUR RAHMAN*. (3)_____.

(2) *Mark R. Schafer*. (4)_____.

Date of Interview: *03 February 2012*.

Type: ☒ Telephonic ☐ Video Conference
☐ Personal [copy given to: ☐ applicant ☐ applicant's representative]

Exhibit shown or demonstration conducted: ☐ Yes ☒ No.
If Yes, brief description: _____.

Issues Discussed ☐101 ☐112 ☐102 ☐103 ☒Others
(For each of the checked box(es) above, please describe below the issue and detailed description of the discussion)

Claim(s) discussed: *1, 3-4, 7-9, 11-12, 14-17, 19, and 22*.

Identification of prior art discussed: _____.

Substance of Interview
(For each issue discussed, provide a detailed description and indicate if agreement was reached. Some topics may include: identification or clarification of a reference or a portion thereof, claim interpretation, proposed amendments, arguments of any applied references etc...)

Applicant agreed to amend all independent claims to include limitations from claims 5, 6, and 10 and/or similar claims and thereby cancel claims 5, 6, and 10 and/or similar claims for the purpose of allowability..

Applicant recordation instructions: It is not necessary for applicant to provide a separate record of the substance of interview.

Examiner recordation instructions: Examiners must summarize the substance of any interview of record. A complete and proper recordation of the substance of an interview should include the items listed in MPEP 713.04 for complete and proper recordation including the identification of the general thrust of each argument or issue discussed, a general indication of any other pertinent matters discussed regarding patentability and the general results or outcome of the interview, to include an indication as to whether or not agreement was reached on the issues raised.

☐ Attachment

/MAHFUZUR RAHMAN/ Examiner, Art Unit 2438	

UNITED STATES PATENT AND TRADEMARK OFFICE

UNITED STATES DEPARTMENT OF COMMERCE
United States Patent and Trademark Office
Address: COMMISSIONER FOR PATENTS
P.O. Box 1450
Alexandria, Virginia 22313-1450
www.uspto.gov

NOTICE OF ALLOWANCE AND FEE(S) DUE

22903 7590 02/09/2012
COOLEY LLP
ATTN: PATENT GROUP
Suite 1100
777 - 6th Street, NW
WASHINGTON, DC 20001

EXAMINER
RAHMAN, MAHFUZUR

ART UNIT	PAPER NUMBER
2438	

DATE MAILED: 02/09/2012

APPLICATION NO.	FILING DATE	FIRST NAMED INVENTOR	ATTORNEY DOCKET NO.	CONFIRMATION NO.
11/408,146	04/20/2006	Matthew L. Boney	WEBR-044/00US 303666-2049	8009

TITLE OF INVENTION: BACKWARDS RESEARCHING ACTIVITY INDICATIVE OF PESTWARE

APPLN. TYPE	SMALL ENTITY	ISSUE FEE DUE	PUBLICATION FEE DUE	PREV. PAID ISSUE FEE	TOTAL FEE(S) DUE	DATE DUE
nonprovisional	NO	$1740	$300	$0	$2040	05/09/2012

THE APPLICATION IDENTIFIED ABOVE HAS BEEN EXAMINED AND IS ALLOWED FOR ISSUANCE AS A PATENT. PROSECUTION ON THE MERITS IS CLOSED. THIS NOTICE OF ALLOWANCE IS NOT A GRANT OF PATENT RIGHTS. THIS APPLICATION IS SUBJECT TO WITHDRAWAL FROM ISSUE AT THE INITIATIVE OF THE OFFICE OR UPON PETITION BY THE APPLICANT. SEE 37 CFR 1.313 AND MPEP 1308.

THE ISSUE FEE AND PUBLICATION FEE (IF REQUIRED) MUST BE PAID WITHIN THREE MONTHS FROM THE MAILING DATE OF THIS NOTICE OR THIS APPLICATION SHALL BE REGARDED AS ABANDONED. THIS STATUTORY PERIOD CANNOT BE EXTENDED. SEE 35 U.S.C. 151. THE ISSUE FEE DUE INDICATED ABOVE DOES NOT REFLECT A CREDIT FOR ANY PREVIOUSLY PAID ISSUE FEE IN THIS APPLICATION. IF AN ISSUE FEE HAS PREVIOUSLY BEEN PAID IN THIS APPLICATION (AS SHOWN ABOVE), THE RETURN OF PART B OF THIS FORM WILL BE CONSIDERED A REQUEST TO REAPPLY THE PREVIOUSLY PAID ISSUE FEE TOWARD THE ISSUE FEE NOW DUE.

HOW TO REPLY TO THIS NOTICE:

I. Review the SMALL ENTITY status shown above.

If the SMALL ENTITY is shown as YES, verify your current SMALL ENTITY status:

A. If the status is the same, pay the TOTAL FEE(S) DUE shown above.

B. If the status above is to be removed, check box 5b on Part B - Fee(s) Transmittal and pay the PUBLICATION FEE (if required) and twice the amount of the ISSUE FEE shown above, or

If the SMALL ENTITY is shown as NO:

A. Pay TOTAL FEE(S) DUE shown above, or

B. If applicant claimed SMALL ENTITY status before, or is now claiming SMALL ENTITY status, check box 5a on Part B - Fee(s) Transmittal and pay the PUBLICATION FEE (if required) and 1/2 the ISSUE FEE shown above.

II. PART B - FEE(S) TRANSMITTAL, or its equivalent, must be completed and returned to the United States Patent and Trademark Office (USPTO) with your ISSUE FEE and PUBLICATION FEE (if required). If you are charging the fee(s) to your deposit account, section "4b" of Part B - Fee(s) Transmittal should be completed and an extra copy of the form should be submitted. If an equivalent of Part B is filed, a request to reapply a previously paid issue fee must be clearly made, and delays in processing may occur due to the difficulty in recognizing the paper as an equivalent of Part B.

III. All communications regarding this application must give the application number. Please direct all communications prior to issuance to Mail Stop ISSUE FEE unless advised to the contrary.

IMPORTANT REMINDER: Utility patents issuing on applications filed on or after Dec. 12, 1980 may require payment of maintenance fees. It is patentee's responsibility to ensure timely payment of maintenance fees when due.

PTOL-85 (Rev. 02/11)

Sophos Ex. 1014
Page 41 of 423

PART B - FEE(S) TRANSMITTAL

Complete and send this form, together with applicable fee(s), to: Mail **Mail Stop ISSUE FEE**
Commissioner for Patents
P.O. Box 1450
Alexandria, Virginia 22313-1450
or Fax (571)-273-2885

INSTRUCTIONS: This form should be used for transmitting the ISSUE FEE and PUBLICATION FEE (if required). Blocks 1 through 5 should be completed where appropriate. All further correspondence including the Patent, advance orders and notification of maintenance fees will be mailed to the current correspondence address as indicated unless corrected below or directed otherwise in Block 1, by (a) specifying a new correspondence address; and/or (b) indicating a separate "FEE ADDRESS" for maintenance fee notifications.

CURRENT CORRESPONDENCE ADDRESS (Note: Use Block 1 for any change of address)

22903 7590 02/09/2012
COOLEY LLP
ATTN: PATENT GROUP
Suite 1100
777 - 6th Street, NW
WASHINGTON, DC 20001

Note: A certificate of mailing can only be used for domestic mailings of the Fee(s) Transmittal. This certificate cannot be used for any other accompanying papers. Each additional paper, such as an assignment or formal drawing, must have its own certificate of mailing or transmission.

Certificate of Mailing or Transmission

I hereby certify that this Fee(s) Transmittal is being deposited with the United States Postal Service with sufficient postage for first class mail in an envelope addressed to the Mail Stop ISSUE FEE address above, or being facsimile transmitted to the USPTO (571) 273-2885, on the date indicated below.

(Depositor's name)
(Signature)
(Date)

APPLICATION NO.	FILING DATE	FIRST NAMED INVENTOR	ATTORNEY DOCKET NO.	CONFIRMATION NO.
11/408,146	04/20/2006	Matthew L. Boney	WEBR-044/00US 303666-2049	8009

TITLE OF INVENTION: BACKWARDS RESEARCHING ACTIVITY INDICATIVE OF PESTWARE

APPLN. TYPE	SMALL ENTITY	ISSUE FEE DUE	PUBLICATION FEE DUE	PREV. PAID ISSUE FEE	TOTAL FEE(S) DUE	DATE DUE
nonprovisional	NO	$1740	$300	$0	$2040	05/09/2012

EXAMINER	ART UNIT	CLASS-SUBCLASS
RAHMAN, MAHFUZUR	2438	726-022000

1. Change of correspondence address or indication of "Fee Address" (37 CFR 1.363).
- ❑ Change of correspondence address (or Change of Correspondence Address form PTO/SB/122) attached.
- ❑ "Fee Address" indication (or "Fee Address" Indication form PTO/SB/47; Rev 03-02 or more recent) attached. **Use of a Customer Number is required.**

2. For printing on the patent front page, list
(1) the names of up to 3 registered patent attorneys or agents OR, alternatively,
(2) the name of a single firm (having as a member a registered attorney or agent) and the names of up to 2 registered patent attorneys or agents. If no name is listed, no name will be printed.

1 _____
2 _____
3 _____

3. ASSIGNEE NAME AND RESIDENCE DATA TO BE PRINTED ON THE PATENT (print or type)

PLEASE NOTE: Unless an assignee is identified below, no assignee data will appear on the patent. If an assignee is identified below, the document has been filed for recordation as set forth in 37 CFR 3.11. Completion of this form is NOT a substitute for filing an assignment.

(A) NAME OF ASSIGNEE (B) RESIDENCE: (CITY and STATE OR COUNTRY)

Please check the appropriate assignee category or categories (will not be printed on the patent) : ❑ Individual ❑ Corporation or other private group entity ❑ Government

4a. The following fee(s) are submitted:
- ❑ Issue Fee
- ❑ Publication Fee (No small entity discount permitted)
- ❑ Advance Order - # of Copies _____

4b. Payment of Fee(s): (**Please first reapply any previously paid issue fee shown above**)
- ❑ A check is enclosed.
- ❑ Payment by credit card. Form PTO-2038 is attached.
- ❑ The Director is hereby authorized to charge the required fee(s), any deficiency, or credit any overpayment, to Deposit Account Number _____ (enclose an extra copy of this form).

5. **Change in Entity Status** (from status indicated above)
- ❑ a. Applicant claims SMALL ENTITY status. See 37 CFR 1.27.
- ❑ b. Applicant is no longer claiming SMALL ENTITY status. See 37 CFR 1.27(g)(2).

NOTE: The Issue Fee and Publication Fee (if required) will not be accepted from anyone other than the applicant; a registered attorney or agent; or the assignee or other party in interest as shown by the records of the United States Patent and Trademark Office.

Authorized Signature _____ Date _____

Typed or printed name _____ Registration No. _____

This collection of information is required by 37 CFR 1.311. The information is required to obtain or retain a benefit by the public which is to file (and by the USPTO to process) an application. Confidentiality is governed by 35 U.S.C. 122 and 37 CFR 1.14. This collection is estimated to take 12 minutes to complete, including gathering, preparing, and submitting the completed application form to the USPTO. Time will vary depending upon the individual case. Any comments on the amount of time you require to complete this form and/or suggestions for reducing this burden, should be sent to the Chief Information Officer, U.S. Patent and Trademark Office, U.S. Department of Commerce, P.O. Box 1450, Alexandria, Virginia 22313-1450. DO NOT SEND FEES OR COMPLETED FORMS TO THIS ADDRESS. SEND TO: Commissioner for Patents, P.O. Box 1450, Alexandria, Virginia 22313-1450.

Under the Paperwork Reduction Act of 1995, no persons are required to respond to a collection of information unless it displays a valid OMB control number.

UNITED STATES PATENT AND TRADEMARK OFFICE

UNITED STATES DEPARTMENT OF COMMERCE
United States Patent and Trademark Office
Address: COMMISSIONER FOR PATENTS
P.O. Box 1450
Alexandria, Virginia 22313-1450
www.uspto.gov

APPLICATION NO.	FILING DATE	FIRST NAMED INVENTOR	ATTORNEY DOCKET NO.	CONFIRMATION NO.
11/408,146	04/20/2006	Matthew L. Boney	WEBR-044/00US 303666-2049	8009

22903 7590 02/09/2012

COOLEY LLP
ATTN: PATENT GROUP
Suite 1100
777 - 6th Street, NW
WASHINGTON, DC 20001

EXAMINER
RAHMAN, MAHFUZUR

ART UNIT	PAPER NUMBER
2438	

DATE MAILED: 02/09/2012

Determination of Patent Term Adjustment under 35 U.S.C. 154 (b)
(application filed on or after May 29, 2000)

The Patent Term Adjustment to date is 802 day(s). If the issue fee is paid on the date that is three months after the mailing date of this notice and the patent issues on the Tuesday before the date that is 28 weeks (six and a half months) after the mailing date of this notice, the Patent Term Adjustment will be 802 day(s).

If a Continued Prosecution Application (CPA) was filed in the above-identified application, the filing date that determines Patent Term Adjustment is the filing date of the most recent CPA.

Applicant will be able to obtain more detailed information by accessing the Patent Application Information Retrieval (PAIR) WEB site (http://pair.uspto.gov).

Any questions regarding the Patent Term Extension or Adjustment determination should be directed to the Office of Patent Legal Administration at (571)-272-7702. Questions relating to issue and publication fee payments should be directed to the Customer Service Center of the Office of Patent Publication at 1-(888)-786-0101 or (571)-272-4200.

Privacy Act Statement

The Privacy Act of 1974 (P.L. 93-579) requires that you be given certain information in connection with your submission of the attached form related to a patent application or patent. Accordingly, pursuant to the requirements of the Act, please be advised that: (1) the general authority for the collection of this information is 35 U.S.C. 2(b)(2); (2) furnishing of the information solicited is voluntary; and (3) the principal purpose for which the information is used by the U.S. Patent and Trademark Office is to process and/or examine your submission related to a patent application or patent. If you do not furnish the requested information, the U.S. Patent and Trademark Office may not be able to process and/or examine your submission, which may result in termination of proceedings or abandonment of the application or expiration of the patent.

The information provided by you in this form will be subject to the following routine uses:

1. The information on this form will be treated confidentially to the extent allowed under the Freedom of Information Act (5 U.S.C. 552) and the Privacy Act (5 U.S.C 552a). Records from this system of records may be disclosed to the Department of Justice to determine whether disclosure of these records is required by the Freedom of Information Act.
2. A record from this system of records may be disclosed, as a routine use, in the course of presenting evidence to a court, magistrate, or administrative tribunal, including disclosures to opposing counsel in the course of settlement negotiations.
3. A record in this system of records may be disclosed, as a routine use, to a Member of Congress submitting a request involving an individual, to whom the record pertains, when the individual has requested assistance from the Member with respect to the subject matter of the record.
4. A record in this system of records may be disclosed, as a routine use, to a contractor of the Agency having need for the information in order to perform a contract. Recipients of information shall be required to comply with the requirements of the Privacy Act of 1974, as amended, pursuant to 5 U.S.C. 552a(m).
5. A record related to an International Application filed under the Patent Cooperation Treaty in this system of records may be disclosed, as a routine use, to the International Bureau of the World Intellectual Property Organization, pursuant to the Patent Cooperation Treaty.
6. A record in this system of records may be disclosed, as a routine use, to another federal agency for purposes of National Security review (35 U.S.C. 181) and for review pursuant to the Atomic Energy Act (42 U.S.C. 218(c)).
7. A record from this system of records may be disclosed, as a routine use, to the Administrator, General Services, or his/her designee, during an inspection of records conducted by GSA as part of that agency's responsibility to recommend improvements in records management practices and programs, under authority of 44 U.S.C. 2904 and 2906. Such disclosure shall be made in accordance with the GSA regulations governing inspection of records for this purpose, and any other relevant (i.e., GSA or Commerce) directive. Such disclosure shall not be used to make determinations about individuals.
8. A record from this system of records may be disclosed, as a routine use, to the public after either publication of the application pursuant to 35 U.S.C. 122(b) or issuance of a patent pursuant to 35 U.S.C. 151. Further, a record may be disclosed, subject to the limitations of 37 CFR 1.14, as a routine use, to the public if the record was filed in an application which became abandoned or in which the proceedings were terminated and which application is referenced by either a published application, an application open to public inspection or an issued patent.
9. A record from this system of records may be disclosed, as a routine use, to a Federal, State, or local law enforcement agency, if the USPTO becomes aware of a violation or potential violation of law or regulation.

Notice of Allowability	Application No.	Applicant(s)	
	11/408,146	BONEY, MATTHEW L.	
	Examiner	Art Unit	
	MAHFUZUR RAHMAN	2438	

-- The MAILING DATE of this communication appears on the cover sheet with the correspondence address--

All claims being allowable, PROSECUTION ON THE MERITS IS (OR REMAINS) CLOSED in this application. If not included herewith (or previously mailed), a Notice of Allowance (PTOL-85) or other appropriate communication will be mailed in due course. **THIS NOTICE OF ALLOWABILITY IS NOT A GRANT OF PATENT RIGHTS.** This application is subject to withdrawal from issue at the initiative of the Office or upon petition by the applicant. See 37 CFR 1.313 and MPEP 1308.

1. ☒ This communication is responsive to *11/09/2011*.

2. ☐ An election was made by the applicant in response to a restriction requirement set forth during the interview on _____; the restriction requirement and election have been incorporated into this action.

3. ☒ The allowed claim(s) is/are *1,3,4,7-9,11,12,14-17,19 and 22*.

4. ☐ Acknowledgment is made of a claim for foreign priority under 35 U.S.C. § 119(a)-(d) or (f).
   a) ☐ All b) ☐ Some* c) ☐ None of the:
      1. ☐ Certified copies of the priority documents have been received.
      2. ☐ Certified copies of the priority documents have been received in Application No. _____ .
      3. ☐ Copies of the certified copies of the priority documents have been received in this national stage application from the International Bureau (PCT Rule 17.2(a)).

   * Certified copies not received: _____.

Applicant has THREE MONTHS FROM THE "MAILING DATE" of this communication to file a reply complying with the requirements noted below. Failure to timely comply will result in ABANDONMENT of this application.
THIS THREE-MONTH PERIOD IS NOT EXTENDABLE.

5. ☐ A SUBSTITUTE OATH OR DECLARATION must be submitted. Note the attached EXAMINER'S AMENDMENT or NOTICE OF INFORMAL PATENT APPLICATION (PTO-152) which gives reason(s) why the oath or declaration is deficient.

6. ☐ CORRECTED DRAWINGS (as "replacement sheets") must be submitted.
   (a) ☐ including changes required by the Notice of Draftsperson's Patent Drawing Review (PTO-948) attached
      1) ☐ hereto or 2) ☐ to Paper No./Mail Date _____.
   (b) ☐ including changes required by the attached Examiner's Amendment / Comment or in the Office action of Paper No./Mail Date _____.

   Identifying indicia such as the application number (see 37 CFR 1.84(c)) should be written on the drawings in the front (not the back) of each sheet. Replacement sheet(s) should be labeled as such in the header according to 37 CFR 1.121(d).

7. ☐ DEPOSIT OF and/or INFORMATION about the deposit of BIOLOGICAL MATERIAL must be submitted. Note the attached Examiner's comment regarding REQUIREMENT FOR THE DEPOSIT OF BIOLOGICAL MATERIAL.

Attachment(s)

1. ☒ Notice of References Cited (PTO-892)
2. ☐ Notice of Draftperson's Patent Drawing Review (PTO-948)
3. ☐ Information Disclosure Statements (PTO/SB/08), Paper No./Mail Date _____
4. ☐ Examiner's Comment Regarding Requirement for Deposit of Biological Material
5. ☐ Notice of Informal Patent Application
6. ☒ Interview Summary (PTO-413), Paper No./Mail Date *2/3/2012* .
7. ☒ Examiner's Amendment/Comment
8. ☒ Examiner's Statement of Reasons for Allowance
9. ☐ Other _____.

/M. R./
Examiner, Art Unit 2438

DETAILED ACTION

This office action is response to the proposed amendment on 02/03/2012 in which claims 1, 3-4, 7-9, 11-12, 14-17, 19, and 22 are presented for examination. Claims 1, 9, 11, 12, 17, 19, and 22 have been amended. Claims 2, 5-6, 10, 13, 18, and 20-21 have been cancelled.

EXAMINER'S AMENDMENT

1. An examiner's amendment to the record appears below. Should the changes and/or additions be unacceptable to applicant, an amendment may be filed as provided by 37 CFR 1.312. To ensure consideration of such an amendment, it MUST be submitted no later than the payment of the issue fee.

Authorization for this examiner's amendment was given in a telephone interview with applicant's representative Mark R. Schafer on February 03, 2012. The examiner-initiated interview summary (PTO 413B) is attached herein.

Amendment to the Claims

2. CLAIMS:

Please replace all the claims as follows:

1. (Currently amended) A method for identifying an origin of activity on a computer that is indicative of pestware comprising:

monitoring, using a kernel-mode driver, the computer for activity that is indicative of pestware, wherein the monitoring includes monitoring API calls and storing a history of at least a portion of the API calls in an activity log;

analyzing, heuristically, computer activity to determine whether one or more weighted factors associated with an activity exceeds a threshold so as to arrive at a determination that the activity is indicative of pestware;

identifying, based upon the activity, an object residing on the computer that is a suspected pestware object;

accessing, in response to the identifying an object, at least a portion of a recorded history of externally networked sources that the computer received files from so as to identify a reference to an identity of a particular externally networked source that the suspected pestware object originated from; and

reporting the identity of the particular externally networked source to an externally networked pestware research entity so as to enable the externally networked pestware research entity to research whether the particular externally networked source is a source of pestware.

5-6. (Currently canceled)

9. (Currently amended) A system for identifying a source of activity on a computer that is indicative of pestware including:

an activity monitor configured to monitor API calls and to store a history of at least a portion of the API calls in an activity log, wherein the activity monitor includes a kernel-mode driver adapted to intercept the API calls;

a heuristics module configured to identify an activity on the computer that is indicative of pestware residing on the computer and to analyze the activity to determine whether one or more weighted factors associated with the activity exceeds a threshold; and

a research portion configured to access, in response to a prompt from the heuristics module, a first set of recorded information on the computer that relates the activity to at least one file residing ~~an~~ on the computer, and wherein the research portion is configured to access a second set of recorded information on the computer that relates the at least one file to an externally networked source from which the file was received; and

a reporting portion configured to generate a report that identifies the externally networked source of the file and to report an identity of the externally networked source to an externally networked pestware research entity so as to enable the externally networked pestware research entity to research whether the externally networked source is a source of pestware.

10. (Currently canceled)

11. (Currently amended) The system of claim [[10]] 9, wherein activity monitor is configured to store an identity of each process that made each of the API calls in the stored history, and wherein the activity monitor is configured to store an identity of each file that

corresponds to each the processes that made the API calls in the stored history so as to create a relation between each API call and at least one file.

12. (Currently amended) The system of claim [[10]] 9, wherein the heuristics module is configured to receive information about the API calls from the activity monitor and determine whether the API calls are indicative of pestware.

13. (Currently canceled)

17. (Currently amended) A non-transitory computer-readable medium including processor-executable instructions for identifying an origin of activity on a computer that is indicative of pestware, the instructions including instructions for:

monitoring, with a kernel-mode driver, the computer for activity that is indicative of pestware, wherein the instructions for monitoring include instructions for monitoring API calls and storing a history of at least a portion of the API calls in an activity log;

analyzing, heuristically, computer activity to determine whether one or more weighted factors associated with an activity exceeds a threshold so as to arrive at a determination that the activity is indicative of pestware;

identifying, based upon the activity, an object residing on the computer that is a suspected pestware object;

accessing, in response to the identifying an object, at least a portion of a recorded history of externally networked sources that the computer received files from so as to identify a

reference to an identity of a particular externally networked source that the suspected pestware object originated from; and

reporting the identity of the particular ~~web site~~ externally networked source to an externally networked pestware research entity so as to enable the externally networked pestware research entity to research whether the particular externally networked source is a source of pestware.

19. (Currently amended) The non-transitory computer-readable medium of claim 17, wherein the particular externally networked source is identified by an identifier selected from the group consisting of an I.P. address and a URL.

20. (Currently canceled)

21. (Currently canceled)

22. (Currently amended) The non-transitory computer-readable medium of claim 17, wherein the recorded history resides in at least one log selected from the group consisting of an activity log, a browser history, browser cache, browser settings, operating system settings, an event log, a debugging log, a firewall log, file information and monitoring software logs.

Allowable Subject Matter

3. Claims 1, 3-4, 7-9, 11-12, 14-17, 19, and 22 are allowed.

Reasons for Allowance

4. The following is an examiner's statement of reasons for allowance:

Applicant's remarks make evident the reasons for allowance, satisfying the record of prosecution as a whole. Specifically, the substance of applicant's arguments pages 8-13 filed 11/09/2011 are persuasive as the combination of prior art references falls into impermissible hindsight reconstruction of applicant's claims at the time the invention was made (04/20/2006) because of the non-obvious claimed subject matters related to identifying an origin of activity on a computer that is indicative of pestware using a kernel-mode driver and monitoring API calls as cited in independent Claims 1, 9, and 17.

Furthermore, the above amendments renders the claimed invention patentably distinct as none of the prior art of record, either taken by itself or in any combination, would have anticipated or made obvious the invention of the present application. As such, the reasons for allowance are in all probability evident from the record as a whole in view of the above Examiner Amendments.

Claims 3-4, 7-8, 11-12, 14-16, 19, and 22 are also allowed by virtue of their dependency on base claims 1, 9, and 17respectively.

. ***Conclusion***

5. Any inquiry concerning this communication or earlier communications from the examiner should be directed to MAHFUZUR RAHMAN whose telephone number is (571)270-7638. The examiner can normally be reached on Monday thru Friday.

If attempts to reach the examiner by telephone are unsuccessful, the examiner's supervisor, Taghi Arani can be reached on (571) - 272-3787. The fax phone number for the organization where this application or proceeding is assigned is 571-273-8300.

Information regarding the status of an application may be obtained from the Patent Application Information Retrieval (PAIR) system. Status information for published applications may be obtained from either Private PAIR or Public PAIR. Status information for unpublished applications is available through Private PAIR only. For more information about the PAIR system, see http://pair-direct.uspto.gov. Should you have questions on access to the Private PAIR system, contact the Electronic Business Center (EBC) at 866-217-9197 (toll-free). If you would like assistance from a USPTO Customer Service Representative or access to the automated information system, call 800-786-9199 (IN USA OR CANADA) or 571-272-1000.

/M. R./

Examiner, Art Unit 2438

/Taghi T. Arani/

Supervisory Patent Examiner, Art Unit 2438

Notice of References Cited	Application/Control No. 11/408,146	Applicant(s)/Patent Under Reexamination BONEY, MATTHEW L.	
	Examiner MAHFUZUR RAHMAN	Art Unit 2438	Page 1 of 1

U.S. PATENT DOCUMENTS

*		Document Number Country Code-Number-Kind Code	Date MM-YYYY	Name	Classification
	A	US-			
	B	US-			
	C	US-			
	D	US-			
	E	US-			
	F	US-			
	G	US-			
	H	US-			
	I	US-			
	J	US-			
	K	US-			
	L	US-			
	M	US-			

FOREIGN PATENT DOCUMENTS

*		Document Number Country Code-Number-Kind Code	Date MM-YYYY	Country	Name	Classification
	N					
	O					
	P					
	Q					
	R					
	S					
	T					

NON-PATENT DOCUMENTS

*		Include as applicable: Author, Title Date, Publisher, Edition or Volume, Pertinent Pages)
	U	Elements of Computer Security|http://www.google.com/url?sa=t&rct=j&q=&esrc=s&frm=1&source=web&cd=8&ved=0CEwQFjAH&url=http%3A%2F%2Fcms.vle.ase.md%2Fget%2Fpdf%2F7664&ei=_pzyTp3mMeLL0QG7-9zLAg&usg=AFQjCNEmOz7OxykRPyP1_ePiXGgJl1WGWA&sig2=XE_fLI7CTuchuObMdbGYtA|David Salomon|2010
	V	
	W	
	X	

*A copy of this reference is not being furnished with this Office action. (See MPEP § 707.05(a).)
Dates in MM-YYYY format are publication dates. Classifications may be US or foreign.

Search Notes	Application/Control No.	Applicant(s)/Patent Under Reexamination
	11408146	BONEY, MATTHEW L.
	Examiner	**Art Unit**
	MAHFUZUR RAHMAN	2438

SEARCHED

Class	Subclass	Date	Examiner
726	22	2/6/2012	MR

SEARCH NOTES

Search Notes	Date	Examiner
Consulted with Primary David Pearson for non-obvious subject matters of the claims	2/6/2012	MR
East search, search terms used:East search, search terms used:((source or origin$5) with (network or host or computer) and (malware or pestware or virus) and (kernel with API adj call); (determin$5 or identif$4 or locat$3 or detect$3 or look$3 or find$3) near6 (source or originating or originator or origin) with (outside or external or remote or central$5) with (zone or network$3 or zone);	2/6/2012	MR
Performed Inventor/Assignee name search	2/6/2012	MR
Keyword search of 726/27; 713/164,202;380/279;717/124	2/6/2012	MR

INTERFERENCE SEARCH

Class	Subclass	Date	Examiner
713	164, 202	2/6/2012	MR
380	279	2/6/2012	MR
717	124	2/6/2012	MR
726	27	2/6/2012	MR
	((source or origin$5) with (network or computer or host) and (malware or pestware or virus) and (kernel with API adj call)).clm.	2/6/2012	MR

/MAHFUZUR RAHMAN/ Examiner.Art Unit 2438	

Index of Claims	Application/Control No.	Applicant(s)/Patent Under Reexamination
	11408146	BONEY, MATTHEW L.
	Examiner	**Art Unit**
	MAHFUZUR RAHMAN	2438

✓	Rejected	-	Cancelled	N	Non-Elected	A	Appeal
=	Allowed	÷	Restricted	I	Interference	O	Objected

☒ Claims renumbered in the same order as presented by applicant ☐ CPA ☐ T.D. ☐ R.1.47

CLAIM		DATE								
Final	Original	02/12/2010	10/28/2010	05/04/2011	02/06/2012					
1	1	✓	✓	✓	=					
	2	✓	✓	✓	-					
2	3	✓	✓	✓	=					
3	4	✓	✓	✓	=					
	5	✓	✓	✓	-					
	6	✓	✓	✓	-					
4	7	✓	✓	✓	=					
5	8	✓	✓	✓	=					
6	9	✓	✓	✓	=					
	10	✓	✓	✓	-					
7	11	✓	✓	✓	=					
8	12	✓	✓	✓	=					
	13	✓	✓	✓	-					
9	14	✓	✓	✓	=					
10	15	✓	✓	✓	=					
11	16	✓	✓	✓	=					
12	17	✓	✓	✓	=					
	18	✓	✓	✓	-					
13	19	✓	✓	✓	=					
	20	✓	✓	✓	-					
	21	✓	✓	✓	-					
14	22	✓	✓	✓	=					

EAST Search History

EAST Search History (Prior Art)

Ref #	Hits	Search Query	DBs	Default Operator	Plurals	Time Stamp
S192	516	(outside or outsource or external$3 or remot$ or zone) with report$3 with (audit$3 or inspect$3 or research$3)	USPAT	OR	OFF	2012/01/31 19:35
S198	86	S192 and (outside or outsource or external$3 or remot$ or zone) with (audit$3 or inspect$3 or research$3) same2 (indicia or suspicious or suspected or abnormal or potential)	USPAT	OR	OFF	2012/01/31 19:37
S199	30	S192 and (outside or outsource or external$3 or remot$ or zone) with (audit$3 or inspect$3 or research$3) with (indicia or suspicious or suspected or abnormal or potential)	USPAT	OR	OFF	2012/01/31 19:37
S201	16	S199 and (outside or outsource or external$3 or remot$ or zone) near6 source	USPAT	OR	OFF	2012/01/31 19:39
S202	16	S201 and (@ad<"20060420" or rlad <"20060420")	US-PGPUB; USPAT; FPRS; EPO; JPO; DERWENT	OR	ON	2012/01/31 19:39
S208	12	S198 and monitor$3 with (indicia or suspicious or suspected or abnormal or potential)	USPAT	OR	OFF	2012/01/31 19:44
S210	68	(network or zone) with (outside or outsource or external$3 or remot$ or zone) with (audit$3 or inspect$3 or research$3) with (indicia or suspicious or suspected or abnormal or potential)	USPAT	OR	OFF	2012/02/01 12:48
S211	0	S210 and (kernel same monitor$3)	USPAT	OR	OFF	2012/02/01 12:48
S212	1	S210 and kernel and monitor$3	USPAT	OR	OFF	2012/02/01 12:49
S213	13	S210 and (quarantin$3 or remov$3) with (detect$3 or identification or identif$5 or determin$5)	USPAT	OR	OFF	2012/02/01 12:53
S215	396	(quarantin$3 or remov$3) with (detect$3 or identification or identif$5 or determin$5) and (kernel same monitor$3)	USPAT	OR	OFF	2012/02/01 12:56
S216	0	S215 and (network or zone) with (outside or outsource or external$3 or remot$ or zone) with (audit$3 or inspect$3 or research$3) with (indicia or suspicious or suspected or abnormal or potential)	USPAT	OR	OFF	2012/02/01 12:57
S217	0	S215 and (outside or outsource or	USPAT	OR	OFF	2012/02/01

		external$3 or remot$ or zone) with (audit$3 or inspect$3 or research$3) with (indicia or suspicious or suspected or abnormal or potential)				12:57
S218	14	S215 and (outside or outsource or external$3 or remot$ or zone) and (audit$3 or inspect$3 or research$3) with (indicia or suspicious or suspected or abnormal or potential)	USPAT	OR	OFF	2012/02/01 12:57
S219	12	S218 and (@ad< "20060420" or @rlad <"20060420")	US-PGPUB; USPAT; FPRS; EPO; JPO; DERWENT	OR	ON	2012/02/01 12:57
S220	2	(US-20050268112-$ or US-20020078381-$).did.	US-PGPUB	OR	OFF	2012/02/01 14:12
S222	1	S220 and (Central or centralization or centraliz$5)	US-PGPUB	OR	OFF	2012/02/01 14:19
S223	2	S220 and (repository or database)	US-PGPUB	OR	OFF	2012/02/01 14:19
S224	3	(US-7490350-$ or US-7134141-$ or US-7007301-$).did.	USPAT	OR	OFF	2012/02/01 14:40
S225	3	S224 and (Central or centralization or centraliz$5)	USPAT	OR	OFF	2012/02/01 14:40
S227	14	boney near3 matthew.inv.	US-PGPUB; USPAT; FPRS; EPO; JPO; DERWENT	OR	ON	2012/02/06 12:48
S228	12521	726/22-25,13;713/187-188,193-194.ccls.	US-PGPUB; USPAT; FPRS; EPO; JPO; DERWENT	OR	ON	2012/02/06 12:48
S229	516	(outside or outsource or external$3 or remot$ or zone) with report$3 with (audit$3 or inspect$3 or research$3)	USPAT	OR	OFF	2012/02/06 12:56
S230	30	S229 and (outside or outsource or external$3 or remot$ or zone) with (audit$3 or inspect$3 or research$3) with (indicia or suspicious or suspected or abnormal or potential)	USPAT	OR	OFF	2012/02/06 12:56
S231	26	(source or origin$5) with pestware same2 (indication or indicia or reference or map$4 or link$3)	US-PGPUB; USPAT; FPRS; EPO; JPO; DERWENT	OR	ON	2012/02/06 12:56
S232	396	(quarantin$3 or remov$3) with (detect$3 or identification or identif$5 or determin$5) and (kernel same monitor$3)	USPAT	OR	OFF	2012/02/06 12:56
S233	14	S232 and (outside or outsource or external$3 or remot$ or zone) and (audit$3 or inspect$3 or research$3) with (indicia or suspicious or suspected or abnormal or potential)	USPAT	OR	OFF	2012/02/06 12:57
S234	12	S233 and (@ad< "20060420" or @rlad <"20060420")	US-PGPUB; USPAT; FPRS; EPO; JPO; DERWENT	OR	ON	2012/02/06 12:57
S235	0	webroot.as. and ((source or	US-PGPUB;	OR	ON	2012/02/06

		origin$5) with network and (malware or pestware or virus) and (kernel with API adj call))	USPAT; USOCR; FPRS; EPO; JPO; DERWENT; IBM_TDB			12:58
S236	78	webroot.as.	US-PGPUB; USPAT; USOCR; FPRS; EPO; JPO; DERWENT; IBM_TDB	OR	ON	2012/02/06 12:58
S237	0	S236 and ((source or origin$5) with (network or host or computer) and (malware or pestware or virus) and (kernel with API adj call))	US-PGPUB; USPAT; USOCR; FPRS; EPO; JPO; DERWENT; IBM_TDB	OR	ON	2012/02/06 12:58

EAST Search History (Interference)

Ref #	Hits	Search Query	DBs	Default Operator	Plurals	Time Stamp
S238	27	(kernel with API adj call).clm.	US-PGPUB; USPAT; UPAD	OR	ON	2012/02/06 12:49
S239	22	S238 and (@ad< "20060420" or @rlad < "20060420")	US-PGPUB; USPAT; UPAD	OR	ON	2012/02/06 12:50
S240	0	((source or origin$5) with (external$3 or outside or central$5) near4 network$3 and (kernel with API adj call)).clm.	US-PGPUB; USPAT; UPAD	OR	ON	2012/02/06 12:52
S241	0	((source or origin$5) with network$3 and (kernel with API adj call)).clm.	US-PGPUB; USPAT; UPAD	OR	ON	2012/02/06 12:52
S242	8	((source or origin$5) and (kernel with API adj call)).clm.	US-PGPUB; USPAT; UPAD	OR	ON	2012/02/06 12:53
S243	4	((source or origin$5) and (malware or pestware or virus) and (kernel with API adj call)).clm.	US-PGPUB; USPAT; UPAD	OR	ON	2012/02/06 12:54
S244	0	S243 and ((source or origin$5) with network and (malware or pestware or virus) and (kernel with API adj call)).clm.	US-PGPUB; USPAT; UPAD	OR	ON	2012/02/06 12:55
S245	0	((source or origin$5) with network and (malware or pestware or virus) and (kernel with API adj call)).clm.	US-PGPUB; USPAT; UPAD	OR	ON	2012/02/06 12:55
S246	2	((source or origin$5) with (network or computer or host) and (malware or pestware or virus) and (kernel with API adj call)).clm.	US-PGPUB; USPAT; UPAD	OR	ON	2012/02/06 12:55
S247	0	S246 and (@ad< "20060420" or @rlad	US-	OR	ON	2012/02/06

		< "20060420")	PGPUB; USPAT; UPAD			12:55
S248	0	webroot.as. and ((source or origin$5) with network and (malware or pestware or virus) and (kernel with API adj call))	US-PGPUB; USPAT; UPAD	OR	ON	2012/02/06 12:57

2/6/2012 3:55:02 PM
C:\Users\mrahman4\Documents\EAST\Workspaces\71_ackward researching existing pestware_11408146\71_ackward researching existing pestware_11408146.wsp

Issue Classification	Application/Control No.	Applicant(s)/Patent Under Reexamination
	11408146	BONEY, MATTHEW L.
	Examiner	**Art Unit**
	MAHFUZUR RAHMAN	2438

ORIGINAL		INTERNATIONAL CLASSIFICATION										
CLASS	SUBCLASS	CLAIMED					NON-CLAIMED					
726	22	G	0	6	F	21 / 00 (2006.01.01)						

CROSS REFERENCE(S)

CLASS	SUBCLASS (ONE SUBCLASS PER BLOCK)				
713	164	202			
380	279				
717	124				
726	27				

☒ Claims renumbered in the same order as presented by applicant ☐ CPA ☐ T.D. ☐ R.1.47

Final	Original	Final	Original	Final	Original	Final	Original	Final	Original	Final	Original	Final	Original	Final	Original
1	1	12	17												
	2		18												
2	3	13	19												
3	4		20												
	5		21												
	6	14	22												
4	7														
5	8														
6	9														
	10														
7	11														
8	12														
	13														
9	14														
10	15														
11	16														

/M.R./ Examiner.Art Unit 2438 (Assistant Examiner)	02/06/2012 (Date)	**Total Claims Allowed:** 14
/TAGHI ARANI/ Supervisory Patent Examiner.Art Unit 2438 (Primary Examiner)	02/08/2012 (Date)	O.G. Print Claim(s): 1 O.G. Print Figure: 3

PTO/SB/06 (07-06)
Approved for use through 1/31/2007. OMB 0651-0032
U.S. Patent and Trademark Office; U.S. DEPARTMENT OF COMMERCE
Under the Paperwork Reduction Act of 1995, no persons are required to respond to a collection of information unless it displays a valid OMB control number.

PATENT APPLICATION FEE DETERMINATION RECORD

Substitute for Form PTO-875

Application or Docket Number	Filing Date	☐ To be Mailed
11/408,146	04/20/2006	

APPLICATION AS FILED – PART I

FOR	(Column 1) NUMBER FILED	(Column 2) NUMBER EXTRA	SMALL ENTITY ☐ RATE ($)	SMALL ENTITY FEE ($)	OR	OTHER THAN SMALL ENTITY RATE ($)	OTHER THAN SMALL ENTITY FEE ($)
☐ BASIC FEE (37 CFR 1.16(a), (b), or (c))	N/A	N/A	N/A			N/A	
☐ SEARCH FEE (37 CFR 1.16(k), (i), or (m))	N/A	N/A	N/A			N/A	
☐ EXAMINATION FEE (37 CFR 1.16(o), (p), or (q))	N/A	N/A	N/A			N/A	
TOTAL CLAIMS (37 CFR 1.16(i))	minus 20 =	*	X $ =		OR	X $ =	
INDEPENDENT CLAIMS (37 CFR 1.16(h))	minus 3 =	*	X $ =			X $ =	
☐ APPLICATION SIZE FEE (37 CFR 1.16(s))	If the specification and drawings exceed 100 sheets of paper, the application size fee due is $250 ($125 for small entity) for each additional 50 sheets or fraction thereof. See 35 U.S.C. 41(a)(1)(G) and 37 CFR 1.16(s).						
☐ MULTIPLE DEPENDENT CLAIM PRESENT (37 CFR 1.16(j))							
* If the difference in column 1 is less than zero, enter "0" in column 2.			TOTAL			TOTAL	

APPLICATION AS AMENDED – PART II

AMENDMENT 02/09/2012	(Column 1) CLAIMS REMAINING AFTER AMENDMENT		(Column 2) HIGHEST NUMBER PREVIOUSLY PAID FOR	(Column 3) PRESENT EXTRA	SMALL ENTITY RATE ($)	SMALL ENTITY ADDITIONAL FEE ($)	OR	OTHER THAN SMALL ENTITY RATE ($)	OTHER THAN SMALL ENTITY ADDITIONAL FEE ($)
Total (37 CFR 1.16(i))	* 14	Minus	** 22	= 0	X $ =		OR	X $60=	0
Independent (37 CFR 1.16(h))	* 3	Minus	***3	= 0	X $ =		OR	X $250=	0
☐ Application Size Fee (37 CFR 1.16(s))									
☐ FIRST PRESENTATION OF MULTIPLE DEPENDENT CLAIM (37 CFR 1.16(j))							OR		
					TOTAL ADD'L FEE		OR	TOTAL ADD'L FEE	0

AMENDMENT	(Column 1) CLAIMS REMAINING AFTER AMENDMENT		(Column 2) HIGHEST NUMBER PREVIOUSLY PAID FOR	(Column 3) PRESENT EXTRA	RATE ($)	ADDITIONAL FEE ($)		RATE ($)	ADDITIONAL FEE ($)
Total (37 CFR 1.16(i))	*	Minus	**	=	X $ =		OR	X $ =	
Independent (37 CFR 1.16(h))	*	Minus	***	=	X $ =		OR	X $ =	
☐ Application Size Fee (37 CFR 1.16(s))									
☐ FIRST PRESENTATION OF MULTIPLE DEPENDENT CLAIM (37 CFR 1.16(j))							OR		
					TOTAL ADD'L FEE		OR	TOTAL ADD'L FEE	

* If the entry in column 1 is less than the entry in column 2, write "0" in column 3.

** If the "Highest Number Previously Paid For" IN THIS SPACE is less than 20, enter "20".

*** If the "Highest Number Previously Paid For" IN THIS SPACE is less than 3, enter "3".

The "Highest Number Previously Paid For" (Total or Independent) is the highest number found in the appropriate box in column 1.

Legal Instrument Examiner:
/PATSY ZIMMERMAN/

This collection of information is required by 37 CFR 1.16. The information is required to obtain or retain a benefit by the public which is to file (and by the USPTO to process) an application. Confidentiality is governed by 35 U.S.C. 122 and 37 CFR 1.14. This collection is estimated to take 12 minutes to complete, including gathering, preparing, and submitting the completed application form to the USPTO. Time will vary depending upon the individual case. Any comments on the amount of time you require to complete this form and/or suggestions for reducing this burden, should be sent to the Chief Information Officer, U.S. Patent and Trademark Office, U.S. Department of Commerce, P.O. Box 1450, Alexandria, VA 22313-1450. DO NOT SEND FEES OR COMPLETED FORMS TO THIS ADDRESS. **SEND TO: Commissioner for Patents, P.O. Box 1450, Alexandria, VA 22313-1450.**

If you need assistance in completing the form, call 1-800-PTO-9199 and select option 2.

IN THE UNITED STATES PATENT AND TRADEMARK OFFICE

In Re Application of:	BONEY, Matthew L.	Confirmation No.:	8009
Serial No.:	11/408,146	Group Art Unit:	2438
Filed:	April 20, 2006	Examiner:	RAHMAN, Mahfuzur

FOR: **BACKWARDS RESEARCHING ACTIVITY INDICATIVE OF PESTWARE**

Mail Stop Amendment
Commissioner for Patents
P.O. Box 1450
Alexandria, VA 22313-1450

AMENDMENT/RESPONSE TO OFFICE ACTION

In response to the Official Action dated May 9, 2011 (the "Office Action"), please amend the above-identified patent application in the following manner:

Amendments to the Claims are reflected on the listing of the claims which begins on page 2 of this paper.

Remarks/Arguments begin on page 8 of this paper.

AMENDMENTS TO THE CLAIMS:

Set forth below in ascending order, with status identifiers, is a complete listing of all claims currently under examination. Changes to any amended claims are indicated by strikethrough and underlining. This listing also reflects any cancellation and/or addition of claims.

1. (currently amended) A method for identifying an origin of activity on a computer that is indicative of pestware comprising:

monitoring the computer for activity that is indicative of pestware;

identifying, based upon the activity, an object residing on the computer that is a suspected pestware object;~~ and~~

accessing at least a portion of a recorded history of externally networked sources that the computer received files from so as to identify a reference to an identity of a particular externally networked source that the suspected pestware object originated from; and

reporting the identity of the particular externally networked source to an externally networked pestware research entity so as to enable the externally networked pestware research entity to research whether the particular externally networked source is a source of pestware.

2. (canceled)

3. (previously presented) The method of claim 1, wherein the particular externally networked source is identified by an identifier selected from the group consisting of an I.P. address and a URL.

4. (original) The method of claim 3, wherein the identifying includes accessing an activity log that includes information that relates the activity to the suspected pestware object.

5. (original) The method of claim 1, wherein the monitoring includes monitoring the computer for activity with a kernel-mode driver.

6. (original) The method of claim 5, wherein the monitoring includes heuristically analyzing the activity so as to arrive at a determination that the activity is indicative of pestware.

7. (original) The method of claim 1, wherein the recorded history resides in a browser cache, which includes information about files downloaded to the computer and a source of each of the files.

8. (original) The method of claim 1, wherein the recorded history resides in at least one log selected from the group consisting of an activity log, a browser history, browser cache, browser settings, operating system settings, an event log, a debugging log, a firewall log, file information and monitoring software logs.

9. (currently amended) A system for identifying a source of activity on a computer that is indicative of pestware including:

a heuristics module configured to identify activity on the computer that is indicative of pestware residing on the computer; and

a research portion configured to access a first set of recorded information on the computer that relates the activity to at least one file residing an the computer, and wherein the research portion is configured to access a second set of recorded information on the computer that relates the at least one file to an externally networked source from which the file was received; and

a reporting portion configured to generate a report that identifies the externally networked source of the file and to report an identity of the externally networked source to an externally networked pestware research entity so as to enable the externally networked pestware research entity to research whether the externally networked source is a source of pestware.

10. (original) The system of claim 9, including:

an activity monitor configured to monitor API calls and to store a history of at least a portion of the API calls in an activity log.

11. (original) The system of claim 10, wherein activity monitor is configured to store an identity of each process that made each of the API calls in the stored history, and wherein the activity monitor is configured to store an identity of each file that corresponds to each the processes that made the API calls in the stored history so as to create a relation between each API call and at least one file.

12. (original) The system of claim 10, wherein the heuristics module is configured to receive information about the API calls from the activity monitor and determine whether the API calls are indicative of pestware.

13. (original) The system of claim 10, wherein the activity monitor includes a kernel-mode driver adapted to intercept the API calls.

14. (original) The system of claim 9, wherein the first set of recorded information and the second set of recorded information reside in the same log file on a file storage device of the computer.

15. (previously presented) The system of claim 9, wherein the externally networked source is identified by an identifier selected from the group consisting of an I.P. address and a URL.

16. (original) The system of claim 9, wherein the recorded history resides in at least one log selected from the group consisting of an activity log, a browser history, browser cache, browser settings, operating system settings, an event log, a debugging log, a firewall log, file information and monitoring software logs.

17. (currently amended) A computer-readable medium including processor-executable instructions for identifying an origin of activity on a computer that is indicative of pestware, the instructions including instructions for:

monitoring the computer for activity that is indicative of pestware;

identifying, based upon the activity, an object residing on the computer that is a suspected pestware object;~~ and~~

accessing at least a portion of a recorded history of externally networked sources that the computer received files from so as to identify a reference to an identity of a particular externally networked source that the suspected pestware object originated from; and

reporting the identity of the particular web site to an externally networked pestware research entity so as to enable the externally networked pestware research entity to research whether the particular externally networked source is a source of pestware.

18. (canceled)

19. (previously presented) The computer-readable medium of claim 17, wherein the particular externally networked source is identified by an identifier selected from the group consisting of an I.P. address and a URL.

20. (original) The computer-readable medium of claim 17, wherein the instructions for monitoring include instructions for monitoring the computer for activity with a kernel-mode driver.

21. (original) The computer-readable medium of claim 20, wherein the instructions for monitoring include instructions for heuristically analyzing the activity so as to arrive at a determination that the activity is indicative of pestware.

22. (original) The computer-readable medium of claim 17, wherein the recorded history resides in at least one log selected from the group consisting of an activity log, a browser history,

browser cache, browser settings, operating system settings, an event log, a debugging log, a firewall log, file information and monitoring software logs.

REMARKS

Each of claims 1, 9, and 17 is currently amended. Each of claims 2 and 18 is canceled. No other claims are currently amended, canceled, or added. Each of claims 1, 3-17, and 19-22 thus remains pending

Claim Rejections under 35 U.S.C. § 103

The Office Action rejects each of claims 1-22 as being unpatentable under 35 U.S.C. § 103(a) over Wang et al. (U.S. Publ. No. 2005/0268112, hereinafter "Wang") in view of Farley et al. (U.S. Patent No. 7,089,428, hereinafter "Farley"). Applicant respectfully traverses these rejections.

Claim 1

Neither Wang nor Farley teaches or suggests "reporting the identity of the particular externally networked source to an externally networked pestware research entity so as to enable the externally networked pestware research entity to research whether the particular externally networked source is a source of pestware." Currently-amended independent claim 1 now recites, among other things, "reporting the identity of the particular externally networked source to an externally networked pestware research entity so as to enable the externally networked pestware research entity to research whether the particular externally networked source is a source of pestware." The Office Action asserts that Wang teaches "reporting the identity of the particular externally networked source to a pestware research entity so as to enable the pestware research entity to research whether the particular externally networked source is a source of pestware" as recited in now-canceled claim 2. Office Action, p. 5. Specifically, the Office Action asserts that Wang's description, at Paragraph [0041], of an "event log to store details of software installations" and a Gatekeeper Helper Object (BHO) for

monitoring activity" teach that limitation. Office Action, p. 5. Claim 1 has been currently amended to make clear that the pestware research entity is externally networked. Applicant respectfully disagrees that Wang teaches an "externally networked pestware research entity."

First, the event log described by Wang is not an externally networked pestware research entity. The event log is a file that resides within the computer that runs Wang's Gatekeeper engine software. Wang, Figure 3 and Paragraph [0039]. For that reason alone, the event log cannot be "an externally networked pestware research entity." Further, Wang does not describe providing the event log to any externally networked entity. Rather, the event log and its data remain within the confines of Wang's computer that runs the Gatekeeper engine. Wang, Figure 3 and Paragraphs [0039]-[0041].

Second, Wang's Gatekeeper Browser Helper Object ("BHO") is similarly located on the computer running the Gatekeeper engine. Wang, Figure 3. The BHO monitors activity on the computer and records results to a trace log file. Wang, Paragraph [0041]. That log file is also located on the same computer. Wang, Figure 3. Nowhere does Wang describe the BHO reporting results to any entity external to the computer running the Gatekeeper engine. Therefore, Wang neither teaches nor suggests "reporting the identity of the particular externally networked source to an externally-networked pestware research entity so as to enable the externally networked pestware research entity to research whether the particular externally networked source is a source of pestware."

Farley also contains no teaching or suggestion of an externally networked pestware research entity. Accordingly, currently-amended independent claim 1 recites limitations that neither Wang nor Farley teaches or suggests.

Each of claims 1 and 3-8 is allowable. Because neither Wang nor Farley, whether taken separately or in combination, teach or suggest each and every limitation of currently-amended independent claim 1, Applicant believes claim 1 to be allowable. Each of claims 3-8 is thus allowable at least by virtue of its depending from allowable claim 1. Therefore, Applicant respectfully requests withdrawal of the rejection, under 35 U.S.C. § 103, of each of claims 1 and 2-8.

Claim 5

Wang neither teaches nor suggests "monitoring the computer for activity with a kernel-mode driver." Claim 5 recites, among other things, "monitoring the computer for activity with a kernel-mode driver." The Office Action asserts that Wang, at Paragraph [0062], describes a loadable kernel module ("LKM") and thus discloses this limitation. Office Action, p. 6. Applicant respectfully disagrees.

Wang describes monitoring kernel modules, not monitoring *with* a kernel-mode driver. According to Wang, a kernel module is a type of ASEP, or auto-start extensibility point, which is a "configuration point[] that can be 'hooked' to allow programs to be auto-started without explicit user invocation." Wang, Paragraphs [009], [0062]. Wang is directed to monitoring these ASEPs "to detect spyware installations." Wang, Abstract. So, Wang describes in no uncertain terms that its kernel modules themselves are monitored. In Wang, the BHO performs the monitoring. Wang, Paragraph [0041]. And Wang never describes the BHO as a kernel module or driver. In short, Wang does not describe a kernel level module that performs any monitoring activity.

Therefore, Wang does not teach or suggest "monitoring the computer for activity with a kernel-mode drive." Accordingly, Applicant believes claim 5 to be allowable. Applicant therefore respectfully requests withdrawal of the rejection, under 35 U.S.C. § 103, of claim 5.

Claim 9

Neither Wang nor Farley teach or suggest "a reporting portion configured . . . to report an identity of the externally networked source to an externally networked pestware research entity so as to enable the externally networked pestware research entity to research whether the externally networked source is a source of pestware." Currently-amended independent claim 9 now recites, among other things, "a reporting portion configured . . . to report an identity of the externally networked source to an externally networked pestware research entity so as to enable the externally networked pestware research entity to research whether the externally networked source is a source of pestware." This limitation is similar to the limitation described above in connection with claim 1. And the Office Action rejects claim 9 on grounds similar to those used to reject claim 1. Therefore, the arguments made above in connection with claim 1 similarly apply to claim 9.

Each of claims 9-16 is allowable. Because neither Wang nor Farley, whether taken separately or in combination, teach or suggest each and every limitation of currently-amended independent claim 9, Applicant believes claim 9 to be allowable. Each of claims 10-16 is thus allowable at least by virtue of its depending from allowable claim 9. Therefore, Applicant respectfully requests withdrawal of the rejection, under 35 U.S.C. § 103, of each of claims 9-16.

Claim 13

Wang neither teaches nor suggests "the activity monitor includes a kernel-mode driver adapted to intercept the API calls." Claim 13 recites, among other things, "the activity monitor includes a kernel-mode driver adapted to intercept the API calls." The Office Action asserts that Wang, at Paragraph [0062], discloses this limitation. Office Action, p. 9-10. Applicant respectfully disagrees.

As described above, in connection with claim 5, Wang teaches that a loadable kernel module, or LKM, is an ASEP which is a type of object that Wang's BHO monitors for pestware. Wang never describes those LKMs as being included in an activity monitor or intercepting API calls. As discussed above, Wang monitors LKMs; it does not use them to monitor.

Therefore, Wang neither teaches nor suggests "the activity monitor includes a kernel-mode driver adapted to intercept the API calls." Accordingly, Applicant believes claim 13 to be allowable. Applicant therefore respectfully requests withdrawal of the rejection, under 35 U.S.C. § 103, of claim 13.

Claim 17

Neither Wang nor Farley teaches or suggests "reporting the identity of the particular web site to an externally networked pestware research entity so as to enable the externally networked pestware research entity to research whether the particular externally networked source is a source of pestware." Currently-amended independent claim 17 now recites, among other things, "reporting the identity of the particular web site to an externally networked pestware research entity so as to enable the externally networked pestware research entity to research whether the particular externally networked source is a source of pestware." This

limitation is similar to the limitation described above in connection with claim 1. Therefore, the arguments made above in connection with claim 1 similarly apply to claim 17. Therefore, neither Wang nor Farley teaches or suggests this limitation.

Each of claims 17 and 19-22 is allowable. Because neither Wang nor Farley, whether taken separately or in combination, teach or suggest each and every limitation of currently-amended independent claim 17, Applicant believes claim 17 to be allowable. Each of claims 19-22 is thus allowable at least by virtue of its depending from allowable claim 17. Therefore, Applicant respectfully requests withdrawal of the rejection, under 35 U.S.C. § 103, of each of claims 17-22.

Claim 20

Wang neither teaches nor suggests "instructions for monitoring the computer for activity with a kernel-mode driver." Claim 20 recites, among other things, "instructions for monitoring the computer for activity with a kernel-mode driver." This limitation is similar to the limitation discussed above in connection with claim 5. And The Office Action rejects claim 20 on grounds similar to those used to reject claim 5. Therefore, arguments similar to those made in connection with claim 5 also apply to claim 20. Accordingly, Applicant believes claim 20 to be allowable. Applicant therefore respectfully requests withdrawal of the rejection, under 35 U.S.C. § 103, of claim 20.

Claim Amendments

Independent claim is currently amended to recite, among other things, "reporting the identity of the particular externally networked source to an externally networked pestware research entity so as to enable the externally networked pestware research entity to research whether the particular externally networked source is a source of pestware." Independent claim

9 is currently amended to recite, among other things, "a reporting portion configured . . . and to report an identity of the externally networked source to an externally networked pestware research entity so as to enable the externally networked pestware research entity to research whether the externally networked source is a source of pestware." Independent claim 17 is currently amended to recite, among other things, "reporting the identity of the particular web site to an externally networked pestware research entity so as to enable the externally networked pestware research entity to research whether the particular externally networked source is a source of pestware." Support for these amendments can be found, for example, at Paragraphs [0015]-[0016] and [0043], in the application as filed. Therefore, no new matter has been added through this amendment.

CONCLUSION

In view of the foregoing, Applicant respectfully submits that no further impediments exist to the allowance of this application and, therefore, requests an indication of allowability. However, the Examiner is requested to call the undersigned if any questions or comments arise.

The Director is hereby authorized to charge any appropriate fees under 37 C.F.R. §§ 1.16, 1.17, and 1.21 that may be required by this paper, and to credit any overpayment, to Deposit Account No. 50-1283.

COOLEY LLP
ATTN: Patent Group
777 6th Street NW, Suite 1100
Washington, DC 20001

Tel: (720) 566-4106
Fax: (202) 842-7899

Respectfully submitted,
COOLEY LLP

By: /Mark R. Schafer/
Mark R. Schafer
Reg. No. 65,336

Electronic Patent Application Fee Transmittal

Application Number:	11408146
Filing Date:	20-Apr-2006
Title of Invention:	Backwards researching activity indicative of pestware
First Named Inventor/Applicant Name:	Matthew L. Boney
Filer:	Mark Randolph Schafer/Sherry Bitler
Attorney Docket Number:	WEBR-044/00US 303666-2049

Filed as Large Entity

Utility under 35 USC 111(a) Filing Fees

Description	Fee Code	Quantity	Amount	Sub-Total in USD($)
Basic Filing:				
Pages:				
Claims:				
Miscellaneous-Filing:				
Petition:				
Patent-Appeals-and-Interference:				
Post-Allowance-and-Post-Issuance:				
Extension-of-Time:				
Extension - 3 months with $0 paid	1253	1	1270	1270

Description	Fee Code	Quantity	Amount	Sub-Total in USD($)
Miscellaneous:				
			Total in USD ($)	**1270**

Electronic Acknowledgement Receipt

EFS ID:	11373259
Application Number:	11408146
International Application Number:	
Confirmation Number:	8009
Title of Invention:	Backwards researching activity indicative of pestware
First Named Inventor/Applicant Name:	Matthew L. Boney
Customer Number:	22903
Filer:	Mark Randolph Schafer/Sherry Bitler
Filer Authorized By:	Mark Randolph Schafer
Attorney Docket Number:	WEBR-044/00US 303666-2049
Receipt Date:	09-NOV-2011
Filing Date:	20-APR-2006
Time Stamp:	18:01:43
Application Type:	Utility under 35 USC 111(a)

Payment information:

Submitted with Payment	yes
Payment Type	Deposit Account
Payment was successfully received in RAM	$1270
RAM confirmation Number	4841
Deposit Account	501283
Authorized User	
The Director of the USPTO is hereby authorized to charge indicated fees and credit any overpayment as follows:	
Charge any Additional Fees required under 37 C.F.R. Section 1.17 (Patent application and reexamination processing fees)	

File Listing:

Document Number	Document Description	File Name	File Size(Bytes)/ Message Digest	Multi Part /.zip	Pages (if appl.)
1	Applicant Arguments/Remarks Made in an Amendment	WEBR04400US_Response_to_5_9_11_OA.pdf	148679 d0c022bf37014a43fc2e29430c06ec43f0a9cdd6	no	14
Warnings:					
Information:					
2	Fee Worksheet (SB06)	fee-info.pdf	30219 9dd3d23f45c62a1317f639e6d8c70ae31739bc23	no	2
Warnings:					
Information:					
			Total Files Size (in bytes):	178898	

This Acknowledgement Receipt evidences receipt on the noted date by the USPTO of the indicated documents, characterized by the applicant, and including page counts, where applicable. It serves as evidence of receipt similar to a Post Card, as described in MPEP 503.

New Applications Under 35 U.S.C. 111
If a new application is being filed and the application includes the necessary components for a filing date (see 37 CFR 1.53(b)-(d) and MPEP 506), a Filing Receipt (37 CFR 1.54) will be issued in due course and the date shown on this Acknowledgement Receipt will establish the filing date of the application.

National Stage of an International Application under 35 U.S.C. 371
If a timely submission to enter the national stage of an international application is compliant with the conditions of 35 U.S.C. 371 and other applicable requirements a Form PCT/DO/EO/903 indicating acceptance of the application as a national stage submission under 35 U.S.C. 371 will be issued in addition to the Filing Receipt, in due course.

New International Application Filed with the USPTO as a Receiving Office
If a new international application is being filed and the international application includes the necessary components for an international filing date (see PCT Article 11 and MPEP 1810), a Notification of the International Application Number and of the International Filing Date (Form PCT/RO/105) will be issued in due course, subject to prescriptions concerning national security, and the date shown on this Acknowledgement Receipt will establish the international filing date of the application.

PTO/SB/06 (07-06)
Approved for use through 1/31/2007. OMB 0651-0032
U.S. Patent and Trademark Office; U.S. DEPARTMENT OF COMMERCE
Under the Paperwork Reduction Act of 1995, no persons are required to respond to a collection of information unless it displays a valid OMB control number.

PATENT APPLICATION FEE DETERMINATION RECORD

Substitute for Form PTO-875

Application or Docket Number	Filing Date	☐ To be Mailed
11/408,146	04/20/2006	

APPLICATION AS FILED – PART I

FOR	(Column 1) NUMBER FILED	(Column 2) NUMBER EXTRA	SMALL ENTITY ☐ RATE ($)	SMALL ENTITY FEE ($)	OR	OTHER THAN SMALL ENTITY RATE ($)	OTHER THAN SMALL ENTITY FEE ($)
☐ BASIC FEE (37 CFR 1.16(a), (b), or (c))	N/A	N/A	N/A			N/A	
☐ SEARCH FEE (37 CFR 1.16(k), (i), or (m))	N/A	N/A	N/A			N/A	
☐ EXAMINATION FEE (37 CFR 1.16(o), (p), or (q))	N/A	N/A	N/A			N/A	
TOTAL CLAIMS (37 CFR 1.16(i))	minus 20 =	*	X $ =		OR	X $ =	
INDEPENDENT CLAIMS (37 CFR 1.16(h))	minus 3 =	*	X $ =			X $ =	
☐ APPLICATION SIZE FEE (37 CFR 1.16(s))	If the specification and drawings exceed 100 sheets of paper, the application size fee due is $250 ($125 for small entity) for each additional 50 sheets or fraction thereof. See 35 U.S.C. 41(a)(1)(G) and 37 CFR 1.16(s).						
☐ MULTIPLE DEPENDENT CLAIM PRESENT (37 CFR 1.16(j))							
* If the difference in column 1 is less than zero, enter "0" in column 2.			TOTAL			TOTAL	

APPLICATION AS AMENDED – PART II

AMENDMENT 11/09/2011	(Column 1) CLAIMS REMAINING AFTER AMENDMENT		(Column 2) HIGHEST NUMBER PREVIOUSLY PAID FOR	(Column 3) PRESENT EXTRA	SMALL ENTITY RATE ($)	SMALL ENTITY ADDITIONAL FEE ($)	OR	OTHER THAN SMALL ENTITY RATE ($)	OTHER THAN SMALL ENTITY ADDITIONAL FEE ($)
Total (37 CFR 1.16(i))	* 20	Minus	** 22	= 0	X $ =		OR	X $60=	0
Independent (37 CFR 1.16(h))	* 3	Minus	***3	= 0	X $ =		OR	X $250=	0
☐ Application Size Fee (37 CFR 1.16(s))									
☐ FIRST PRESENTATION OF MULTIPLE DEPENDENT CLAIM (37 CFR 1.16(j))							OR		
					TOTAL ADD'L FEE		OR	TOTAL ADD'L FEE	0

AMENDMENT	(Column 1) CLAIMS REMAINING AFTER AMENDMENT		(Column 2) HIGHEST NUMBER PREVIOUSLY PAID FOR	(Column 3) PRESENT EXTRA	RATE ($)	ADDITIONAL FEE ($)	OR	RATE ($)	ADDITIONAL FEE ($)
Total (37 CFR 1.16(i))	*	Minus	**	=	X $ =		OR	X $ =	
Independent (37 CFR 1.16(h))	*	Minus	***	=	X $ =		OR	X $ =	
☐ Application Size Fee (37 CFR 1.16(s))									
☐ FIRST PRESENTATION OF MULTIPLE DEPENDENT CLAIM (37 CFR 1.16(j))							OR		
					TOTAL ADD'L FEE		OR	TOTAL ADD'L FEE	

* If the entry in column 1 is less than the entry in column 2, write "0" in column 3.
** If the "Highest Number Previously Paid For" IN THIS SPACE is less than 20, enter "20".
*** If the "Highest Number Previously Paid For" IN THIS SPACE is less than 3, enter "3".
The "Highest Number Previously Paid For" (Total or Independent) is the highest number found in the appropriate box in column 1.

Legal Instrument Examiner:
/CHERYL CLARK/

This collection of information is required by 37 CFR 1.16. The information is required to obtain or retain a benefit by the public which is to file (and by the USPTO to process) an application. Confidentiality is governed by 35 U.S.C. 122 and 37 CFR 1.14. This collection is estimated to take 12 minutes to complete, including gathering, preparing, and submitting the completed application form to the USPTO. Time will vary depending upon the individual case. Any comments on the amount of time you require to complete this form and/or suggestions for reducing this burden, should be sent to the Chief Information Officer, U.S. Patent and Trademark Office, U.S. Department of Commerce, P.O. Box 1450, Alexandria, VA 22313-1450. DO NOT SEND FEES OR COMPLETED FORMS TO THIS ADDRESS. **SEND TO: Commissioner for Patents, P.O. Box 1450, Alexandria, VA 22313-1450.**
If you need assistance in completing the form, call 1-800-PTO-9199 and select option 2.

UNITED STATES PATENT AND TRADEMARK OFFICE

UNITED STATES DEPARTMENT OF COMMERCE
United States Patent and Trademark Office
Address: COMMISSIONER FOR PATENTS
P.O. Box 1450
Alexandria, Virginia 22313-1450
www.uspto.gov

APPLICATION NO.	FILING DATE	FIRST NAMED INVENTOR	ATTORNEY DOCKET NO.	CONFIRMATION NO.
11/408,146	04/20/2006	Matthew L. Boney	WEBR-044/00US 303666-2049	8009

22903 7590 05/09/2011
COOLEY LLP
ATTN: PATENT GROUP
Suite 1100
777 - 6th Street, NW
WASHINGTON, DC 20001

EXAMINER
RAHMAN, MAHFUZUR

ART UNIT	PAPER NUMBER
2438	

MAIL DATE	DELIVERY MODE
05/09/2011	PAPER

Please find below and/or attached an Office communication concerning this application or proceeding.

The time period for reply, if any, is set in the attached communication.

Office Action Summary	Application No.	Applicant(s)	
	11/408,146	BONEY, MATTHEW L.	
	Examiner	Art Unit	
	MAHFUZUR RAHMAN	2438	

-- The MAILING DATE of this communication appears on the cover sheet with the correspondence address --

Period for Reply

A SHORTENED STATUTORY PERIOD FOR REPLY IS SET TO EXPIRE 3 MONTH(S) OR THIRTY (30) DAYS, WHICHEVER IS LONGER, FROM THE MAILING DATE OF THIS COMMUNICATION.

- Extensions of time may be available under the provisions of 37 CFR 1.136(a). In no event, however, may a reply be timely filed after SIX (6) MONTHS from the mailing date of this communication.
- If NO period for reply is specified above, the maximum statutory period will apply and will expire SIX (6) MONTHS from the mailing date of this communication.
- Failure to reply within the set or extended period for reply will, by statute, cause the application to become ABANDONED (35 U.S.C. § 133). Any reply received by the Office later than three months after the mailing date of this communication, even if timely filed, may reduce any earned patent term adjustment. See 37 CFR 1.704(b).

Status

1)☒ Responsive to communication(s) filed on *09 February 2011*.

2a)☐ This action is **FINAL**. 2b)☒ This action is non-final.

3)☐ Since this application is in condition for allowance except for formal matters, prosecution as to the merits is closed in accordance with the practice under *Ex parte Quayle*, 1935 C.D. 11, 453 O.G. 213.

Disposition of Claims

4)☒ Claim(s) *1-22* is/are pending in the application.

4a) Of the above claim(s) _____ is/are withdrawn from consideration.

5)☐ Claim(s) _____ is/are allowed.

6)☒ Claim(s) *1-22* is/are rejected.

7)☐ Claim(s) _____ is/are objected to.

8)☐ Claim(s) _____ are subject to restriction and/or election requirement.

Application Papers

9)☐ The specification is objected to by the Examiner.

10)☒ The drawing(s) filed on *20 April 2006* is/are: a)☒ accepted or b)☐ objected to by the Examiner.

Applicant may not request that any objection to the drawing(s) be held in abeyance. See 37 CFR 1.85(a).

Replacement drawing sheet(s) including the correction is required if the drawing(s) is objected to. See 37 CFR 1.121(d).

11)☐ The oath or declaration is objected to by the Examiner. Note the attached Office Action or form PTO-152.

Priority under 35 U.S.C. § 119

12)☐ Acknowledgment is made of a claim for foreign priority under 35 U.S.C. § 119(a)-(d) or (f).

a)☐ All b)☐ Some * c)☐ None of:

1.☐ Certified copies of the priority documents have been received.

2.☐ Certified copies of the priority documents have been received in Application No. _____.

3.☐ Copies of the certified copies of the priority documents have been received in this National Stage application from the International Bureau (PCT Rule 17.2(a)).

* See the attached detailed Office action for a list of the certified copies not received.

Attachment(s)

1) ☒ Notice of References Cited (PTO-892)

2) ☐ Notice of Draftsperson's Patent Drawing Review (PTO-948)

3) ☐ Information Disclosure Statement(s) (PTO/SB/08) Paper No(s)/Mail Date _____.

4) ☐ Interview Summary (PTO-413) Paper No(s)/Mail Date. _____ .

5) ☐ Notice of Informal Patent Application

6) ☐ Other: _____.

DETAILED ACTION

Applicant's remark filed on 02/09/2011 is acknowledged. Claims 1-22 are unchanged. Claims 1-22 are presented for examination on the merits.

Continued Examination Under 37 CFR 1.114

1. A request for continued examination under 37 CFR 1.114, including the fee set forth in 37 CFR 1.17(e), was filed in this application after final rejection. Since this application is eligible for continued examination under 37 CFR 1.114, and the fee set forth in 37 CFR 1.17(e) has been timely paid, the finality of the previous Office action has been withdrawn pursuant to 37 CFR 1.114. Applicant's submission filed on 02/09/2011 has been entered.

Response to Arguments

2. Applicant's arguments filed on 02/09/2011, with respect to the rejection(s) of claims 1-22 under 35 U.S.C. 103(a) have been considered and necessitated a new ground of rejection presented in this Office action. Claims 1-22 are now rejected under 35 U.S.C. 103(a) as being unpatentable over Wang (prior art of record) in view of Farley (Newly Added).

Claim Rejections - 35 USC § 103

3. The following is a quotation of 35 U.S.C. 103(a) which forms the basis for all obviousness rejections set forth in this Office action:

> (a) A patent may not be obtained though the invention is not identically disclosed or described as set forth in section 102 of this title, if the differences between the subject matter sought to be patented and the prior art are such that the subject matter as a whole would have been obvious at the time the invention was made to a person having ordinary skill in the art to which said subject matter pertains. Patentability shall not be negatived by the manner in which the invention was made.

4. The factual inquiries set forth in *Graham* **v.** *John Deere Co.*, 383 U.S. 1, 148 USPQ 459 (1966), that are applied for establishing a background for determining obviousness under 35 U.S.C. 103(a) are summarized as follows:

1. Determining the scope and contents of the prior art.
2. Ascertaining the differences between the prior art and the claims at issue.
3. Resolving the level of ordinary skill in the pertinent art.
4. Considering objective evidence present in the application indicating obviousness or nonobviousness.

5. Claims 1-22 are rejected under 35 U.S.C. 103(a) as being unpatentable over Wang et al. (US 2005/0268112 A1, hereinafter, Wang) in view of in view of Farley et al. (US 7,089,428 B2, hereinafter, Farley).

Regarding claim 1, Wang discloses a method for identifying an origin of activity on a computer that is indicative of pestware comprising:

monitoring the computer for activity that is indicative of pestware (Paragraph 0042: monitoring activity on a given machine infected with spyware using known-good

and known-bad signatures);

identifying, based upon the activity, an object residing on the computer that is a suspected pestware object (Paragraphs 0009-0010: monitoring ASEP-hook related activity and identifying potential unwanted software such as new or unknown spyware); and

accessing at least a portion of a recorded history of [externally networked sources] that the computer received files from so as to identify [a reference] to an identity of a particular externally networked source that the suspected pestware object originated from (Paragraph 0050: Although web browser history may already record the URL and timestamp for every Web site visited, it is typically a global history for all instances of the browser. By correlating the URL Trace Log entries with entries from a bundle tracing log, the source URL of Web-based installation is identified).

Wang does not explicitly disclose but Farley from the same or similar fields of endeavor teaches an externally networked source (Farley, Paragraph 0073: computer incident source located outside of the network) wherein

an indicia of pestware is being analyzed (Farley, Paragraph 0016: analyzes suspicious computer activity descriptions obtained from data sources in order to detect relationships between raw events that may indicate malicious behavior)

Therefore, it would have been obvious to one of ordinary skill in the art at the time of the invention to identify a reference for an externally networked source as taught by Farley in the teachings of Wang for the advantage of providing a security management system that can log, investigate, respond, and track computer security

incidents wherein network zone definitions can comprise values assigned to parts of a network based upon the amount and type of information that is assessable in certain parts of a network, for example, external or demilitarized zone (Paragraphs 0045 and 0097).

Regarding claim 2, the combination of Wang and Farley discloses the method of claim 1, including:

reporting the identity of the particular externally networked source to a pestware research entity so as to enable the pestware research entity to research whether the particular externally networked source is a source of pestware (Wang, Paragraph 0041: An event log is maintained to store details of software installations, including timestamp and process identification number of the installing process along with a Gatekeeper Browser Helper Object (BHO) for monitoring activity related to potential spyware).

Regarding claim 3, the combination of Wang and Farley discloses the method of claim 1, wherein the particular externally networked source is identified by an identifier selected from the group consisting of an I.P. address and a URL (Wang, Paragraph 0050: the source URL is identified using the URLs recorded by Browser Helper Object (BHO)).

Regarding claim 4, the combination of Wang and Farley discloses the method of claim 3, wherein the identifying includes accessing an activity log that includes

information that relates the activity to the suspected pestware object (Wang, Paragraph 0039: Gatekeeper Browser Helper Object (BHO) records URLs in a uniform resource locator (URL) trace log, which stores the history of the visited URLs).

Regarding claim 5, the combination of Wang and Farley discloses the method of claim 1, wherein the monitoring includes monitoring the computer for activity with a kernel-mode driver (Wang, Paragraph 0062: Loadable Kernel Modules (LKMs) are placed the directory libraries).

Regarding claim 6, the combination of Wang and Farley discloses the method of claim 5, wherein the monitoring includes heuristically analyzing the activity so as to arrive at a determination that the activity is indicative of pestware (Wang, Paragraph 0053: analyzing Registry and file traces collected from any machine to discover new ASEPs that can potentially be hooked by future spyware).

Regarding claim 7, the combination of Wang and Farley discloses the method of claim 1, wherein the recorded history resides in a browser cache, which includes information about files downloaded to the computer and a source of each of the files (Wang, Paragraph 0041: an event log and browser history of visited web pages is recorded).

Regarding claim 8, the combination of Wang and Farley discloses the method

of claim 1, wherein the recorded history resides in at least one log selected from the group consisting of an activity log, a browser history, browser cache, browser settings, operating system settings, an event log, a debugging log, a firewall log, file information and monitoring software logs (Wang, Paragraph 0041: an event log and browser history of visited web pages is recorded).

Regarding claim 9, Wang discloses a system for identifying a source of activity on a computer that is indicative of pestware including:

a heuristics module configured to identify activity on the computer that is indicative of pestware residing on the computer (Paragraph 0013: computer-executable instructions is provided for facilitating the identifying of potential unwanted software); and

a research portion configured to access a first set of recorded information on the computer that relates the activity to at least one file residing an the computer (Paragraph 0053: analyzing Registry and file traces collected from any machine to discover new ASEPs that can potentially be hooked by future spyware; Paragraph 0054: analyze the System Restore file change log), and

wherein the research portion is configured to access a second set of recorded information on the computer that [relates the at least one file to an externally networked source] from which the file was received (Paragraph 0050: By correlating the URL Trace Log entries with entries from a bundle tracing log, the source URL of Web-based installation is identified).; and

a reporting portion configured to generate a report that identifies the externally networked source of the file (Paragraph 0057: a report is being generated by "auto-start trace log" component that contains all ASEP (Auto-Start Extensibility Points) hooks made by the spyware).

Wang does not explicitly disclose but Farley from the same or similar fields of endeavor teaches an externally networked source (Farley, Paragraph 0073: computer incident source located outside of the network) wherein

an indicia of pestware is being analyzed (Farley, Paragraph 0016: analyzes suspicious computer activity descriptions obtained from data sources in order to detect relationships between raw events that may indicate malicious behavior)

Therefore, it would have been obvious to one of ordinary skill in the art at the time of the invention to identify a reference for an externally networked source as taught by Farley in the teachings of Wang for the advantage of providing a security management system that can log, investigate, respond, and track computer security incidents wherein network zone definitions can comprise values assigned to parts of a network based upon the amount and type of information that is assessable in certain parts of a network, for example, external or demilitarized zone (Paragraphs 0045 and 0097).

Regarding claim 10, the combination of Wang and Farley discloses the system of claim 9, including: an activity monitor configured to monitor API calls and to store a

history of at least a portion of the API calls in an activity log (Wang, Paragraph 0039: API calls are gathered by software tool called Gatekeeper).

Regarding claim 11, the combination of Wang and Farley discloses the system of claim 10, wherein activity monitor is configured to store an identity of each process that made each of the API calls in the stored history (Wang, Paragraph 0039: Gatekeeper Browser Helper Object (BHO) records URLs in a uniform resource locator (URL) trace log, which stores the history of the visited URLs), and wherein the activity monitor is configured to store an identity of each file that corresponds to each the processes that made the API calls in the stored history so as to create a relation between each API call and at least one file (Paragraph 0039: Gatekeeper engine communicates with the operating system through APIs and gather information from data files accessed via the file system).

Regarding claim 12, the combination of Wang and Farley discloses the system of claim 10, wherein the heuristics module is configured to receive information about the API calls from the activity monitor and determine whether the API calls are indicative of pestware (Wang, Paragraph 0053: analyzing Registry and file traces collected from any machine to discover new ASEPs that can potentially be hooked by spyware).

Regarding claim 13, the combination of Wang and Farley discloses the system of claim 10, wherein the activity monitor includes a kernel-mode driver adapted to

intercept the API calls (Wang, Paragraph 0062: Loadable Kernel Modules (LKMs) are placed the directory libraries).

Regarding claim 14, the combination of Wang and Farley discloses the system of claim 9, wherein the first set of recorded information and the second set of recorded information reside in the same log file on a file storage device of the computer (Wang, Paragraph 0041: a Gatekeeper Browser Helper Object (BHO) records (URL) trace log, which stores the URL and timestamp of web pages visited by the browser, along with the process identification number. An event log is also maintained to store details of software installations, including timestamp and process identification number of the installing process).

Regarding claim 15, the combination of Wang and Farley discloses the system of claim 9, wherein the externally networked source is identified by an identifier selected from the group consisting of an I.P. address and a URL (Wang, Paragraph 0050: the source URL is identified using the URLs recorded by Browser Helper Object (BHO)).

Regarding claim 16, the combination of Wang and Farley discloses the system of claim 9, wherein the recorded history resides in at least one log selected from the group consisting of an activity log, a browser history, browser cache, browser settings, operating system settings, an event log, a debugging log, a firewall log, file information

and monitoring software logs (Wang, Paragraph 0041: an event log and browser history of visited web pages is recorded).

Regarding claim 17, Wang discloses a computer-readable medium including processor-executable instructions for identifying an origin of activity on a computer that is indicative of pestware, the instructions including instructions for:

monitoring the computer for activity that is indicative of pestware (Paragraph 0042: monitoring activity on a given machine infected with spyware using known-good and known-bad signatures);

identifying, based upon the activity, an object residing on the computer that is a suspected pestware object (Paragraphs 0009-0010: monitoring ASEP-hook related activity and identifying potential unwanted software such as new or unknown spyware); and

accessing at least a portion of a recorded history of externally networked sources that the computer received files from so as to identify a reference to an identity of a particular [externally networked source] that the suspected pestware object originated from (Paragraph 0050: Although web browser history may already record the URL and timestamp for every Web site visited, it is typically a global history for all instances of the browser. By correlating the URL Trace Log entries with entries from a bundle tracing log, the source URL of Web-based installation is identified).

Wang does not explicitly disclose but Farley from the same or similar fields of endeavor teaches an externally networked source (Farley, Paragraph 0073: computer incident source located outside of the network) wherein

an indicia of pestware is being analyzed (Farley, Paragraph 0016: analyzes suspicious computer activity descriptions obtained from data sources in order to detect relationships between raw events that may indicate malicious behavior)

Therefore, it would have been obvious to one of ordinary skill in the art at the time of the invention to identify a reference for an externally networked source as taught by Farley in the teachings of Wang for the advantage of providing a security management system that can log, investigate, respond, and track computer security incidents wherein network zone definitions can comprise values assigned to parts of a network based upon the amount and type of information that is assessable in certain parts of a network, for example, external or demilitarized zone (Paragraphs 0045 and 0097).

Regarding claim 18, the combination of Wang and Farley discloses the computer-readable medium of claim 17, including instructions for: reporting the identity of the particular web site to a pestware research entity so as to enable the pestware research entity to research whether the particular externally networked source is a source of pestware (Wang, Paragraph 0041: An event log is maintained to store details of software installations, including timestamp and process identification number of the

installing process along with a Gatekeeper Browser Helper Object (BHO) for monitoring activity related to potential spyware).

Regarding claim 19, the combination of Wang and Farley discloses the computer-readable medium of claim 17, wherein the particular externally networked source is identified by an identifier selected from the group consisting of an I.P. address and a URL (Wang, Paragraph 0050: the source URL is identified using the URLs recorded by Browser Helper Object (BHO)).

Regarding claim 20, the combination of Wang and Farley discloses the computer-readable medium Of claim 17, wherein the instructions for monitoring include instructions for monitoring the computer for activity with a kernel- mode driver (Wang, Paragraph 0062: Loadable Kernel Modules (LKMs) are placed the directory libraries).

Regarding claim 21, the combination of Wang and Farley discloses the computer-readable medium of claim 20, wherein the instructions for monitoring include instructions for heuristically analyzing the activity so as to arrive at a determination that the activity is indicative of pestware (Wang, Paragraph 0053: analyzing Registry and file traces collected from any machine to discover new ASEPs that can potentially be hooked by future spyware).

Regarding claim 22, the combination of Wang and Farley discloses the

computer-readable medium of claim 17, wherein the recorded history resides in at least one log selected from the group consisting of an activity log, a browser history, browser cache, browser settings, operating system settings, an event log, a debugging log, a firewall log, file information and monitoring software logs (Wang, Paragraph 0041: an event log and browser history of visited web pages is recorded).

Conclusion

6. A reference to specific paragraphs, columns, pages, or figures in a cited prior art reference is not limited to preferred embodiments or any specific examples. It is well settled that a prior art reference, in its entirety, must be considered for all that it expressly teaches and fairly suggests to one having ordinary skill in the art. Stated differently, a prior art disclosure reading on a limitation of Applicant's claim cannot be ignored on the ground that other embodiments disclosed were instead cited. Therefore, the Examiner's citation to a specific portion of a single prior art reference is not intended to exclusively dictate, but rather, to demonstrate an exemplary disclosure commensurate with the specific limitations being addressed. *In re Heck,* 699 F.2d 1331, 1332-33,216 USPQ 1038, 1039 (Fed. Cir. 1983) (quoting In re *Lemelson,* 397 F.2d 1006, 1009, 158 USPQ 275, 277 (CCPA 1968)). In re: *Upsher-Smith Labs. v. Pamlab, LLC,* 412 F.3d 1319, 1323, 75 USPQ2d 1213, 1215 (Fed. Cir. 2005); *In re Fritch,* 972 F.2d 1260, 1264, 23 USPQ2d 1780, 1782 (Fed. Cir. 1992); *Merck & Co. v. Biocraft Labs., Inc.,* 874 F.2d 804,807, 10 USPQ2d 1843, 1846 (Fed. Cir. 1989); *In re Fracalossi,* 681 F.2d 792,794 n.1,215 USPQ 569, 570 n.1 (CCPA 1982); *In re Lamberti, 545 F.2d 747, 750, 192 USPQ 278,280 (CCPA 1976); In re Bozek,* 416 F.2d 1385, 1390, 163 USPQ 545, 549 (CCPA 1969).

7. The prior art made of record and not relied upon is considered pertinent to applicant's disclosure.

Any inquiry concerning this communication or earlier communications from the examiner should be directed to MAHFUZUR RAHMAN whose telephone number is (571)270-7638. The examiner can normally be reached on Monday thru Friday.

If attempts to reach the examiner by telephone are unsuccessful, the examiner's supervisor, Taghi T. Arani can be reached on (571) - 272-3787. The fax phone number for the organization where this application or proceeding is assigned is 571-273-8300.

Information regarding the status of an application may be obtained from the Patent Application Information Retrieval (PAIR) system. Status information for published applications may be obtained from either Private PAIR or Public PAIR. Status information for unpublished applications is available through Private PAIR only. For more information about the PAIR system, see http://pair-direct.uspto.gov. Should you have questions on access to the Private PAIR system, contact the Electronic Business Center (EBC) at 866-217-9197 (toll-free). If you would like assistance from a USPTO Customer Service Representative or access to the automated information system, call 800-786-9199 (IN USA OR CANADA) or 571-272-1000.

/M. R./

Examiner, Art Unit 2438

/Taghi T. Arani/

Supervisory Patent Examiner, Art Unit 2438

Notice of References Cited	Application/Control No. 11/408,146	Applicant(s)/Patent Under Reexamination BONEY, MATTHEW L.	
	Examiner MAHFUZUR RAHMAN	Art Unit 2438	Page 1 of 1

U.S. PATENT DOCUMENTS

*		Document Number Country Code-Number-Kind Code	Date MM-YYYY	Name	Classification
*	A	US-2002/0078381 A1	06-2002	Farley et al.	713/201
*	B	US-2003/0065943 A1	04-2003	Geis et al.	713/201
*	C	US-2003/0154399 A1	08-2003	Zuk et al.	713/201
*	D	US-2005/0120242 A1	06-2005	Mayer et al.	713/201
*	E	US-7,058,976 B1	06-2006	Dark, Susan Pittman	726/23
*	F	US-2007/0094725 A1	04-2007	Borders, Kevin R.	726/022
*	G	US-7,849,185 B1	12-2010	Rockwood, Troy Dean	709/224
	H	US-			
	I	US-			
	J	US-			
	K	US-			
	L	US-			
	M	US-			

FOREIGN PATENT DOCUMENTS

*		Document Number Country Code-Number-Kind Code	Date MM-YYYY	Country	Name	Classification
	N					
	O					
	P					
	Q					
	R					
	S					
	T					

NON-PATENT DOCUMENTS

*		Include as applicable: Author, Title Date, Publisher, Edition or Volume, Pertinent Pages)
	U	
	V	
	W	
	X	

*A copy of this reference is not being furnished with this Office action. (See MPEP § 707.05(a).)
Dates in MM-YYYY format are publication dates. Classifications may be US or foreign.

Index of Claims	Application/Control No.	Applicant(s)/Patent Under Reexamination
	11408146	BONEY, MATTHEW L.
	Examiner	**Art Unit**
	MAHFUZUR RAHMAN	2438

✓	Rejected	-	Cancelled	N	Non-Elected	A	Appeal
=	Allowed	÷	Restricted	I	Interference	O	Objected

☐ Claims renumbered in the same order as presented by applicant ☐ CPA ☐ T.D. ☐ R.1.47

CLAIM		DATE								
Final	Original	02/12/2010	10/28/2010	05/04/2011						
	1	✓	✓	✓						
	2	✓	✓	✓						
	3	✓	✓	✓						
	4	✓	✓	✓						
	5	✓	✓	✓						
	6	✓	✓	✓						
	7	✓	✓	✓						
	8	✓	✓	✓						
	9	✓	✓	✓						
	10	✓	✓	✓						
	11	✓	✓	✓						
	12	✓	✓	✓						
	13	✓	✓	✓						
	14	✓	✓	✓						
	15	✓	✓	✓						
	16	✓	✓	✓						
	17	✓	✓	✓						
	18	✓	✓	✓						
	19	✓	✓	✓						
	20	✓	✓	✓						
	21	✓	✓	✓						
	22	✓	✓	✓						

Search Notes	Application/Control No.	Applicant(s)/Patent Under Reexamination
	11408146	BONEY, MATTHEW L.
	Examiner	**Art Unit**
	MAHFUZUR RAHMAN	2438

SEARCHED

Class	Subclass	Date	Examiner
726	22	5/3/2011	MR

SEARCH NOTES

Search Notes	Date	Examiner
East search, search terms used:(determin$5 or identif$4 or locat$3 or detect$3 or look$3 or find$3) near6 (source or originating or originator or origin) with (outside or external or remote) with (zone or network$3 or zone) and (Time$1stamp$3 or time adj stamp$3)	5/3/2011	MR
Keyword search of 726/27; 713/164,202;380/279;717/124	5/3/2011	MR
Performed Inventor/Assignee name search	5/3/2011	MR

INTERFERENCE SEARCH

Class	Subclass	Date	Examiner

/MAHFUZUR RAHMAN/ Examiner.Art Unit 2438	

EAST Search History

EAST Search History (Prior Art)

Ref #	Hits	Search Query	DBs	Default Operator	Plurals	Time Stamp
L6	3	"20020078381"	US-PGPUB; USPAT; FPRS; EPO; JPO; DERWENT	OR	ON	2011/05/04 11:19
L9	2	6 and (locat$3 or find$3) same (outside or external $3)	US-PGPUB; USPAT; FPRS; EPO; JPO; DERWENT	OR	ON	2011/05/04 12:17
L11	14	boney near3 matthew.inv.	US-PGPUB; USPAT; FPRS; EPO; JPO; DERWENT	OR	ON	2011/05/04 12:43
L12	11140	726/22-25,13;713/187-188,193-194.ccls.	US-PGPUB; USPAT; FPRS; EPO; JPO; DERWENT	OR	ON	2011/05/04 12:43
L13	5	L12 and (identity with source) and (pestware maleware spamware adware scumware)	US-PGPUB; USPAT; FPRS; EPO; JPO; DERWENT	OR	ON	2011/05/04 12:43
S146	102	(determin$5 or identif$4 or locat$3 or detect$3 or look $3 or find$3) with (outside or external$3 or remot$2) with network$3 same (Identification or identity $3 or id or identifier or address or name or url or reference or link) same (compromise$3 or suspici $4 or suspected or abnormal or anomal$4 or unauthorized or potential or behavior$2) same2 (Malicious or indicia)	US-PGPUB; USPAT; FPRS; EPO; JPO; DERWENT	OR	ON	2011/05/03 16:21
S147	102	S146 and (@ad<"20060420" or rlad <"20060420")	US-PGPUB; USPAT; FPRS; EPO; JPO; DERWENT	OR	ON	2011/05/03 16:21

S148	24	("20030023854" | "20030110385" | "20030167153" | "20040083389" | "20050154900" | "20060031940" | "20060117384" | "20070128899" | "20070186282" | "20070222589" | "6973577" | "7765410"). PN.	US-PGPUB; USPAT; FPRS; EPO; JPO; DERWENT	OR	ON	2011/05/03 16:27
S152	102	(determin$5 or identif$4 or locat$3 or detect$3 or look $3 or find$3) with (outside or external$3 or remot$2) with network$3 same (Identification or identity $3 or id or identifier or address or name or url or reference or link) same (compromise$3 or suspici $4 or suspected or abnormal or anomal$4 or unauthorized or potential or behavior$2) same2 (Malicious or indicia)	US-PGPUB; USPAT; FPRS; EPO; JPO; DERWENT	OR	ON	2011/05/03 16:29
S153	102	S152 and (@ad<"20060420" or rlad <"20060420")	US-PGPUB; USPAT; FPRS; EPO; JPO; DERWENT	OR	ON	2011/05/03 16:29
S154	38	S152 and (outside or external or remote) with (source or originating or originator)	US-PGPUB; USPAT; FPRS; EPO; JPO; DERWENT	OR	ON	2011/05/03 16:31
S155	22	S152 and (outside or external or remote) near6 (source or originating or originator) with network	US-PGPUB; USPAT; FPRS; EPO; JPO; DERWENT	OR	ON	2011/05/03 16:31
S159	19	S152 and (outside or external or remote) near6 (source or originating or originator or origin) with network and (period or time or interval or duration or period or periodically) and (backward or revers$3 or back$4)	US-PGPUB; USPAT; FPRS; EPO; JPO; DERWENT	OR	ON	2011/05/03 16:34

S163	30	(US-20040064515-$ or US-20040024864-$ or US-20050268112-$ or US-20040225877-$ or US-20070168694-$ or US-20070220043-$ or US-20030065943-$ or US-20030159070-$ or US-20060031680-$ or US-20070169198-$ or US-20060085528-$ or US-20060230290-$ or US-20070074289-$ or US-20070094725-$ or US-20050154900-$ or US-20030167153-$ or US-20080086775-$ or US-20100083382-$ or US-20060265746-$ or US-20050120242-$ or US-20050086524-$ or US-20040131056-$ or US-20040034794-$ or US-20030154399-$).did. or (US-7849185-$ or US-7539736-$ or US-7352280-$ or US-7089428-$ or US-7058976-$).did. or (WO-9845778-$).did.	US-PGPUB; USPAT; EPO	OR	ON	2011/05/03 17:08
S164	6	S163 and (determin$5 or identif$4 or locat$3 or detect$3 or look$3 or find $3) near6 (source or originating or originator or origin) with (outside or external or remote) with (zone or network$3 or zone)	US-PGPUB; USPAT; FPRS; EPO; JPO; DERWENT	OR	ON	2011/05/03 17:11
S167	10	S163 and (determin$5 or identif$4 or locat$3 or detect$3 or look$3 or find $3) with (source or originating or originator or origin) with (outside or external or remote) with (zone or network$3 or zone)	US-PGPUB; USPAT; FPRS; EPO; JPO; DERWENT	OR	ON	2011/05/03 17:15
S168	7	(US-20030154399-$ or US-20030065943-$ or US-20060265746-$ or US-20050120242-$).did. or (US-7089428-$ or US-7058976-$ or US-7849185-$).did.	US-PGPUB; USPAT	OR	ON	2011/05/03 17:20

S169	4	S168 and (Time$1stamp$3 or time adj stamp$3)	US-PGPUB; USPAT; FPRS; EPO; JPO; DERWENT	OR	ON	2011/05/03 17:20

EAST Search History (Interference)

<This search history is empty>

5/4/2011 12:46:04 PM
C:\Documents and Settings\mrahman4\My Documents\EAST\Workspaces\71_ackward researching existing pestware_11408146\71_ackward researching existing pestware_11408146.wsp

PTO/SB/30 (07-09)
Approved for use through 07/31/2012. OMB 0651-0031
U.S. Patent and Trademark Office; U.S. DEPARTMENT OF COMMERCE
Under the Paperwork Reduction Act of 1995. no persons are required to respond to a collection of information unless it contains a valid OMB control number.

Request for Continued Examination (RCE) Transmittal

Address to:
Mail Stop RCE
Commissioner for Patents
P.O. Box 1450
Alexandria, VA 22313-1450

Application Number	11/408,146
Filing Date	04/20/2006
First Named Inventor	BONEY, Matthew L.
Art Unit	2438
Examiner Name	RAHMAN, Mahfuzur
Attorney Docket Number	WEBR-044/00US 303666-2049

This is a Request for Continued Examination (RCE) under 37 CFR 1 .114 of the above-identified application.
Request for Continued Examination (RCE) practice under 37 CFR 1.114 does not apply to any utility or plant application filed prior to June 8, 1995, or to any design application. See Instruction Sheet for RCEs (not to be submitted to the USPTO) on page 2.

1. Submission required under 37 CFR 1.114 Note: If the RCE is proper, any previously filed unentered amendments and amendments enclosed with the RCE will be entered in the order in which they were filed unless applicant instructs otherwise. If applicant does not wish to have any previously filed unentered amendment(s) entered, applicant must request non-entry of such amendment(s).

   a. ☐ Previously submitted. If a final Office action is outstanding, any amendments filed after the final Office action may be considered as a submission even if this box is not checked.

      i. ☐ Consider the arguments in the Appeal Brief or Reply Brief previously filed on _____

      ii. ☐ Other _____

   b. ☒ Enclosed

      i. ☒ Amendment/Reply

      ii. ☐ Affidavit(s)/ Declaration(s)

      iii. ☐ Information Disclosure Statement (IDS)

      iv. ☐ Other _____

2. Miscellaneous

   Suspension of action on the above-identified application is requested under 37 CFR 1.103(c) for a

   a. ☐ period of ___ months. (Period of suspension shall not exceed 3 months; Fee under 37 CFR 1.17(i) required)

   b. ☐ Other _____

3. Fees The RCE fee under 37 CFR 1.17(e) is required by 37 CFR 1.114 when the RCE is filed.
   The Director is hereby authorized to charge the following fees any underpayment of fees or credit any overpayments to

   a. ☒ Deposit Account No. 50-1283 .

      i. ☒ RCE fee required under 37 CFR 1.17(e)

      ii ☐ Extension of time fee (37 CFR 1.136 and 1.17)

      iii ☐ Other _____

   b. ☐ Check in the amount of $ _____ enclosed

   c. ☐ Payment by credit card (Form PTO-2038 enclosed)

WARNING: Information on this form may become public. Credit card information should not be included on this form. Provide credit card information and authorization on PTO-2038.

SIGNATURE OF APPLICANT, ATTORNEY, OR AGENT REQUIRED

Signature	/s Mark R. Schafer/	Date	2011-02-08
Name (Print/Type)	Mark R. Schafer	Registration No.	65,336

This collection of information is required by 37 CFR 1.114. The information is required to obtain or retain a benefit by the public which is to file (and by the USPTO to process) an application. Confidentiality is governed by 35 U.S.C. 122 and 37 CFR 1.11 and 1.14. This collection is estimated to take 12 minutes to complete, including gathering, preparing, and submitting the completed application form to the USPTO. Time will vary depending upon the individual case. Any comments on the amount of time you require to complete this form and/or suggestions for reducing this burden, should be sent to the Chief Information Officer, U.S. Patent and Trademark Office, U.S. Department of Commerce, P.O. Box 1450, Alexandria, VA 22313-1450. DO NOT SEND FEES OR COMPLETED FORMS TO THIS ADDRESS. **SEND TO: Mail Stop RCE, Commissioner for Patents, P.O. Box 1450, Alexandria, VA 22313-1450.**
If you need assistance in completing the form, call 1-800-PTO-9199 and select option 2.

American LegalNet, Inc.
www.FormsWorkFlow.com

IN THE UNITED STATES PATENT AND TRADEMARK OFFICE

In Re Application of:	BONEY, Matthew L.	Confirmation No.:	8009
Serial No.:	11/408,146	Group Art Unit:	2438
Filed:	April 20, 2006	Examiner:	RAHMAN, Mahfuzur

FOR: **BACKWARDS RESEARCHING ACTIVITY INDICATIVE OF PESTWARE**

Mail Stop RCE
Commissioner for Patents
P.O. Box 1450
Alexandria, VA 22313-1450

RESPONSE TO OFFICE ACTION

This paper is in response to the Official Action dated November 10, 2010 (the "Office Action").

Though no claims have been currently amended, added, or canceled, a **Listing of Claims** has been included beginning on page 2 of the paper for the Examiner's convenience.

Remarks/Arguments begin on page 7 of this paper.

LISTING OF CLAIMS:

Set forth below in ascending order, with status identifiers, is a complete listing of all claims currently under examination.

1. (previously presented) A method for identifying an origin of activity on a computer that is indicative of pestware comprising:

monitoring the computer for activity that is indicative of pestware;

identifying, based upon the activity, an object residing on the computer that is a suspected pestware object; and

accessing at least a portion of a recorded history of externally networked sources that the computer received files from so as to identify a reference to an identity of a particular externally networked source that the suspected pestware object originated from.

2. (previously presented) The method of claim 1, including:

reporting the identity of the particular externally networked source to a pestware research entity so as to enable the pestware research entity to research whether the particular externally networked source is a source of pestware.

3. (previously presented) The method of claim 1, wherein the particular externally networked source is identified by an identifier selected from the group consisting of an I.P. address and a URL.

4. (original) The method of claim 3, wherein the identifying includes accessing an activity log that includes information that relates the activity to the suspected pestware object.

5. (original) The method of claim 1, wherein the monitoring includes monitoring the computer for activity with a kernel-mode driver.

6. (original) The method of claim 5, wherein the monitoring includes heuristically analyzing the activity so as to arrive at a determination that the activity is indicative of pestware.

7. (original) The method of claim 1, wherein the recorded history resides in a browser cache, which includes information about files downloaded to the computer and a source of each of the files.

8. (original) The method of claim 1, wherein the recorded history resides in at least one log selected from the group consisting of an activity log, a browser history, browser cache, browser settings, operating system settings, an event log, a debugging log, a firewall log, file information and monitoring software logs.

9. (previously presented) A system for identifying a source of activity on a computer that is indicative of pestware including:

a heuristics module configured to identify activity on the computer that is indicative of pestware residing on the computer; and

a research portion configured to access a first set of recorded information on the computer that relates the activity to at least one file residing an the computer, and wherein the research portion is configured to access a second set of recorded information on the computer

that relates the at least one file to an externally networked source from which the file was received; and

a reporting portion configured to generate a report that identifies the externally networked source of the file.

10. (original) The system of claim 9, including:

an activity monitor configured to monitor API calls and to store a history of at least a portion of the API calls in an activity log.

11. (original) The system of claim 10, wherein activity monitor is configured to store an identity of each process that made each of the API calls in the stored history, and wherein the activity monitor is configured to store an identity of each file that corresponds to each the processes that made the API calls in the stored history so as to create a relation between each API call and at least one file.

12. (original) The system of claim 10, wherein the heuristics module is configured to receive information about the API calls from the activity monitor and determine whether the API calls are indicative of pestware.

13. (original) The system of claim 10, wherein the activity monitor includes a kernel-mode driver adapted to intercept the API calls.

14. (original) The system of claim 9, wherein the first set of recorded information and the second set of recorded information reside in the same log file on a file storage device of the computer.

15. (previously presented) The system of claim 9, wherein the externally networked source is identified by an identifier selected from the group consisting of an I.P. address and a URL.

16. (original) The system of claim 9, wherein the recorded history resides in at least one log selected from the group consisting of an activity log, a browser history, browser cache, browser settings, operating system settings, an event log, a debugging log, a firewall log, file information and monitoring software logs.

17. (previously presented) A computer-readable medium including processor-executable instructions for identifying an origin of activity on a computer that is indicative of pestware, the instructions including instructions for:

monitoring the computer for activity that is indicative of pestware;

identifying, based upon the activity, an object residing on the computer that is a suspected pestware object; and

accessing at least a portion of a recorded history of externally networked sources that the computer received files from so as to identify a reference to an identity of a particular externally networked source that the suspected pestware object originated from.

18. (previously presented) The computer-readable medium of claim 17, including instructions for:

reporting the identity of the particular web site to a pestware research entity so as to enable the pestware research entity to research whether the particular externally networked source is a source of pestware.

19. (previously presented) The computer-readable medium of claim 17, wherein the particular externally networked source is identified by an identifier selected from the group consisting of an I.P. address and a URL.

20. (original) The computer-readable medium of claim 17, wherein the instructions for monitoring include instructions for monitoring the computer for activity with a kernel-mode driver.

21. (original) The computer-readable medium of claim 20, wherein the instructions for monitoring include instructions for heuristically analyzing the activity so as to arrive at a determination that the activity is indicative of pestware.

22. (original) The computer-readable medium of claim 17, wherein the recorded history resides in at least one log selected from the group consisting of an activity log, a browser history, browser cache, browser settings, operating system settings, an event log, a debugging log, a firewall log, file information and monitoring software logs.

REMARKS

No claims have been currently amended, added, or cancelled. Each of claims 1-22 thus remains pending.

Claim Rejections Under 35 U.S.C. § 103

The Office Action rejects claims 1-22 under 35 U.S.C. § 103(a) as being unpatentable over Wang et al. (U.S. Publ. No. 2005/0268112, hereinafter "Wang") in view of Maddaloni et al. (U.S. Publ. No 2007/0168694, hereinafter "Maddaloni").

Maddaloni is disqualified as prior art under 35 U.S.C. § 103(c). All of the rejections above rely on the combination of Wang and Maddaloni. However, Maddaloni is not an eligible reference upon which a *prima facie* case of obviousness can be based. First, Applicant notes that Maddaloni qualifies as potential prior art only under § 102(e). Second, Maddaloni and the subject matter claimed in the instant application, at the time the instant invention was made, were both owned by the same entity—Webroot, Inc. Therefore, Maddaloni is disqualified as prior art under 35 U.S.C. § 103(c)(1). An assignment of the entire right, title, and interest in Maddaloni to Webroot is recorded at reel/frame 020706/0197. Likewise, an assignment of the entire right, title, and interest in the instant application to Webroot is recorded at reel/frame 017977/0663. Copies of the USPTO assignment recordation receipts for Maddaloni and the instant application are included herewith. The other applied reference, Wang, does not teach or suggest all of the limitations recited in the independent claims. Therefore, Wang can neither anticipate the claims nor render them obvious. Applicant respectfully requests withdrawal of the rejection, under § 103(a), of each of claims 1-22.

Request for Continued Examination

Applicant has filed herewith a Request for Continued Examination (RCE) under 37 C.F.R. § 1.114.

CONCLUSION

In view of the foregoing, Applicant respectfully submits that no further impediments exist to the allowance of this application and, therefore, requests an indication of allowability. However, the Examiner is requested to call the undersigned if any questions or comments arise.

The Director is hereby authorized to charge any appropriate fees under 37 C.F.R. §§ 1.16, 1.17, and 1.21 that may be required by this paper, and to credit any overpayment, to Deposit Account No. 50-1283.

COOLEY LLP
ATTN: Patent Group
777 6th Street NW, Suite 1100
Washington, DC 20001

Tel: (720) 566-4106
Fax: (202) 842-7899

Respectfully submitted,
COOLEY LLP

By: _____
Mark R. Schafer
Reg. No. 65,336

Notice of Recordation and Assignment of U.S. Application No. 11/408,146 (WEBR-044/00US)

WEBR-044/00US
303666-2049 JPB/WOS/SO.

UNITED STATES PATENT AND TRADEMARK OFFICE

UNDER SECRETARY OF COMMERCE FOR INTELLECTUAL PROPERTY AND
DIRECTOR OF THE UNITED STATES PATENT AND TRADEMARK OFFICE

JULY 22, 2006

PTAS

103261239A

COOLEY GODWARD LLP
PATENT GROUP
875 15TH STREET NW, SUITE 800
WASHINGTON, DC 20005-2221

UNITED STATES PATENT AND TRADEMARK OFFICE
NOTICE OF RECORDATION OF ASSIGNMENT DOCUMENT

THE ENCLOSED DOCUMENT HAS BEEN RECORDED BY THE ASSIGNMENT DIVISION OF THE U.S. PATENT AND TRADEMARK OFFICE. A COMPLETE MICROFILM COPY IS AVAILABLE AT THE ASSIGNMENT SEARCH ROOM ON THE REEL AND FRAME NUMBER REFERENCED BELOW.

PLEASE REVIEW ALL INFORMATION CONTAINED ON THIS NOTICE. THE INFORMATION CONTAINED ON THIS RECORDATION NOTICE REFLECTS THE DATA PRESENT IN THE PATENT AND TRADEMARK ASSIGNMENT SYSTEM. IF YOU SHOULD FIND ANY ERRORS OR HAVE QUESTIONS CONCERNING THIS NOTICE, YOU MAY CONTACT THE EMPLOYEE WHOSE NAME APPEARS ON THIS NOTICE AT 571-272-3350. PLEASE SEND REQUEST FOR CORRECTION TO: U.S. PATENT AND TRADEMARK OFFICE, MAIL STOP: ASSIGNMENT SERVICES BRANCH, P.O. BOX 1450, ALEXANDRIA, VA 22313.

RECORDATION DATE: 06/15/2006

REEL/FRAME: 017977/0663
NUMBER OF PAGES: 4

BRIEF: ASSIGNMENT OF ASSIGNOR'S INTEREST (SEE DOCUMENT FOR DETAILS).
DOCKET NUMBER: WEBR-044/00US

ASSIGNOR:
BONEY, MATTHEW L.

DOC DATE: 06/07/2006

ASSIGNEE:
WEBROOT SOFTWARE, INC.
2560 55TH STREET
BOULDER, COLORADO 80301

SERIAL NUMBER: 11408146
FILING DATE: 04/20/2006
PATENT NUMBER:
ISSUE DATE:
TITLE: BACKWARDS RESEARCHING ACTIVITY INDICATIVE OF PESTWARE

ASSIGNMENT SERVICES BRANCH
PUBLIC RECORDS DIVISION

Attorney Docket No. WEBR-044[illegible]US

06-16-06

6-15-04

06-21-2006

103261239

OIPE JUN 15 2006

Form PTO-1595 (Rev. 08/05)
(Rev. 10/02)
OMB No. 0651-0027 (exp. 6/30/2008)

RECORDATION FORM COVER SHEET
PATENTS ONLY

To the Director of the U.S. Patent and Trademark Office: Please record the attached documents or the new address(es) below.

1. Name of conveying party(ies): Matthew L. Boney

Additional name(s) of conveying party(ies) attached? [] Yes [X] No

2. Name and address of receiving party(ies)

Name: Webroot Software, Inc.

Internal Address:

Street Address: 2560 55th Street

City: Boulder

State: CO

Zip: 80301

Additional name(s) & address(es) attached? Yes [] No [X]

3. Nature of conveyance/Execution Date(s):

Execution Date(s): 06/07/06

[X] Assignment [] Merger

[] Security Agreement [] Change of Name

[] Joint Research Agreement [] Government Interest Assignment

[] Executive Order 9424, Confirmatory License

[] Other ( )

4. Application number(s) or patent number(s): [] This document is being filed together with a new application.

A. Patent Application No.(s) 11/408,146

B. Patent No.(s)

Additional numbers attached? [] Yes [X] No

5. Name and address of party to whom correspondence concerning document should be mailed:

Cooley Godward LLP
Patent Group
Street Address: 875 15th Street NW, Suite 800
City: Washington
State: DC
Zip: 20005-2221

6. Total number of applications and patents involved: [01]

7. Total fee (37 CFR 1.21(h) & 3.41).....$40.00

[] Enclosed

[X] Authorized to be charged to deposit account

8. Deposit account number: **50-1283**

The Commissioner is hereby authorized to charge any appropriate fees under 37 CFR 3.41 that may be required by this paper, and to credit any overpayment, to Deposit Account No. 50-1283. This paper is submitted in duplicate.

DO NOT USE THIS SPACE

9. Signature: Date: 6/13/06

Name of Person Signing: Sean R. O'Dowd

Total number of pages including cover sheet, attachments, and documents: [04]

Documents to be recorded (with cover sheet) should be faxed to (571) 273-0140, or mailed to:
Mail Stop Assignment Recordation Services, Director of the U.S. Patent and Trademark Office, P.O. Box 1450, Alexandria, VA 22313-1450

Express Mail Label Number: EV778911595US Date of Deposit: 6/15/06

I hereby certify that this correspondence is being deposited with the United States Postal Service with sufficient postage as Express Mail in an envelope addressed to Mail Stop Assignment Recordation Services, Director of the U.S. Patent and Trademark Office, P.O. Box 1450, Alexandria, VA 22313-1450.

By: Daxmara Sanchez

06/20/2006 DBYRNE 00000078 501283 11408146
01 FC:8021 (40.00 DA)

251581 v1/CO

ASSIGNMENT
(Sole)

WHEREAS, I, **Matthew L. Boney**, residing at 1100 E. 17th Ave., E303, Longmont, Colorado 80501 (referred to as "Assignor") has made an invention(s) (the "Invention(s)") set forth in an application for patent of the United States, entitled **BACKWARDS RESEARCHING ACTIVITY INDICATIVE OF PESTWARE**, and which is a:

(1) [] provisional application
  (a) [] to be filed herewith; or
  (b) [] bearing Application No. , and filed on ; or

(2) [X] non-provisional application
  (a) [] to be filed herewith; or
  (b) [X] bearing Application No. 11/408,146 filed on 04/20/06.

WHEREAS, Webroot Software, Inc., a corporation duly organized under and pursuant to the laws of Colorado, and having its principal place of business at 2560 55th Street, Boulder, CO 80301 (the "Assignee"), is desirous of acquiring the entire right, title, and interest in: the Invention(s); the application for patent identified in paragraph (1) or (2); the right to file applications for patent of the United States or other countries on the Invention(s); any application(s) for patent of the United States or other countries claiming priority to these application(s); any provisional or other right to recover damages, including royalties, for prior infringements of these applications; and any patent(s) of the United States or other countries that may be granted therefor or thereon.

NOW, THEREFORE, for good and sufficient consideration, the receipt of which is hereby acknowledged, and to the extent that the Assignor has not done so already via a prior agreement with the Assignee, or if the Assignor has already done so via a prior agreement with the Assignee then in confirmation of any obligation to do so in said prior agreement, the Assignor has sold, assigned, transferred, and set over, and by these presents does sell, assign, transfer, and set over, unto the Assignee, its successors, legal representatives, and assigns, the Assignor's entire right, title, and interest in:

(a) the Invention(s);

(b) the application for patent identified in paragraph (1) or (2);

(c) the right to file applications for patent of the United States or other countries on the Invention(s), including all rights under the Hague Convention, the

Paris Convention for the Protection of Industrial Property, and under the Patent Cooperation Treaty;

(d) any application(s) for patent of the United States or other countries claiming the Invention(s);

(e) any application(s) for patent of the United States or other countries claiming priority to the application for patent identified in paragraph (1) or (2) or any application(s) for patent claiming the Invention(s), including any division(s), continuation(s), and continuation(s)-in-part;

(f) any provisional or other right to recover damages, including royalties, for prior infringements of any application for patent identified in the proceeding paragraphs (b)-(e); and

(g) any patent(s) of the United States or other countries that may be granted for or on any application for patent identified in the preceding paragraphs (b) – (e), including any reissue(s) and extension(s) of said patent(s).

The above-granted rights, titles, and interests are to be held and enjoyed by the Assignee, for its own use and behalf and the use and behalf of its successors, legal representatives, and assigns, as fully and entirely as the same would have been held and enjoyed by the Assignor had this sale and assignment not been made.

The Assignor hereby represents to the Assignee, its successors, legal representatives, and assigns, that, at the time of execution and delivery of these presents, or if applicable, at such time said prior agreement was executed, the Assignor is the sole and lawful owner of the entire right, title, and interest in and to the Invention(s), that the Invention(s) are unencumbered, except, if applicable, by obligation to assign in accordance with said prior agreement, and that the Assignor has good and full right and lawful authority to sell and convey the same in the manner set forth herein.

The Assignor hereby covenants and agrees to and with the Assignee, its successors, legal representatives, and assigns, that the Assignor will sign all papers and documents, take all lawful oaths, and do all acts necessary or required to be done in connection with any and all proceedings for the procurement, maintenance, enforcement and defense of the Invention(s), said applications, and said patents, including interference proceedings, without charge to the Assignee, its successors, legal representatives, and assigns, but at the cost and expense of the Assignee, its successors, legal representatives, and assigns.

The Assignor hereby authorizes and requests the attorneys of COOLEY GODWARD L.L.P. to insert in the spaces provided above the filing date, the application number, and the attorney docket number of the application identified in paragraph (1) or (2) when known.

The Assignor hereby requests the Commissioner of Patents to issue said patents of the United States to the Assignee for the sole use and behalf of the Assignee, its successors, legal representatives, and assigns.

Date: June 7, 2006 By: **Matthew L. Boney**

State of Colorado)
ss.
County of Boulder)

On June 7, 2006, before me, Shannon L. Reuchlein personally appeared **Matthew L. Boney**, personally known to me or proved to me on the basis of satisfactory evidence, to be the person(s) whose name(s) is/are subscribed to the within instrument and acknowledged to me that he/she/they executed the same in his/her/their authorized capacity(ies), and that by his/her/their signature(s) on the instrument the person(s), or the entity upon behalf of which the person(s) acted, executed the instrument.

WITNESS my hand and official seal.

SHANNON L. REUCHLEIN
Notary Public
State of Colorado

Signature of Notary Public

Place Notary Seal Above

My Commission Expires: 12/01/08

Notice of Recordation and Assignment of U.S. Application No. 11/334,316

UNITED STATES PATENT AND TRADEMARK OFFICE

UNDER SECRETARY OF COMMERCE FOR INTELLECTUAL PROPERTY AND
DIRECTOR OF THE UNITED STATES PATENT AND TRADEMARK OFFICE

500497285A

MARCH 26, 2008

PTAS

COOLEY GODWARD KRONISH LLP
777-6TH STREET NW, SUITE 1100
ATTN: THOMAS M. CROFT, ESQ.
WASHINGTON, DC 20001

UNITED STATES PATENT AND TRADEMARK OFFICE
NOTICE OF RECORDATION OF ASSIGNMENT DOCUMENT

THE ENCLOSED DOCUMENT HAS BEEN RECORDED BY THE ASSIGNMENT DIVISION OF THE U.S. PATENT AND TRADEMARK OFFICE. A COMPLETE MICROFILM COPY IS AVAILABLE AT THE ASSIGNMENT SEARCH ROOM ON THE REEL AND FRAME NUMBER REFERENCED BELOW.

PLEASE REVIEW ALL INFORMATION CONTAINED ON THIS NOTICE. THE INFORMATION CONTAINED ON THIS RECORDATION NOTICE REFLECTS THE DATA PRESENT IN THE PATENT AND TRADEMARK ASSIGNMENT SYSTEM. IF YOU SHOULD FIND ANY ERRORS OR HAVE QUESTIONS CONCERNING THIS NOTICE, YOU MAY CONTACT THE EMPLOYEE WHOSE NAME APPEARS ON THIS NOTICE AT 571-272-3350. PLEASE SEND REQUEST FOR CORRECTION TO: U.S. PATENT AND TRADEMARK OFFICE, MAIL STOP: ASSIGNMENT SERVICES BRANCH, P.O. BOX 1450, ALEXANDRIA, VA 22313.

RECORDATION DATE: 03/26/2008

REEL/FRAME: 020706/0197
NUMBER OF PAGES: 6

BRIEF: CORRECTIVE ASSIGNMENT TO CORRECT THE ADDRESS OF THE ASSIGNEE FROM 2566 55TH STREET, BOULDER, CO 80308 TO 2560 55TH STREET, BOULDER, CO 80301 PREVIOUSLY RECORDED ON REEL 017484 FRAME 0403. ASSIGNOR(S) HEREBY CONFIRMS THE ASSIGNMENT.
DOCKET NUMBER: WEBR-027/00US 303666-2030

ASSIGNOR:
MADDALONI, PHIL

DOC DATE: 01/18/2006

ASSIGNOR:
NICHOLS, TONY

DOC DATE: 01/18/2006

ASSIGNEE:
WEBROOT SOFTWARE, INC.
2560 55TH STREET
BOULDER, COLORADO 80301

020706/0197 PAGE 2

SERIAL NUMBER: 11334316 FILING DATE: 01/18/2006
PATENT NUMBER: ISSUE DATE:
TITLE: SYSTEM AND METHOD FOR IDENTIFYING AND REMOVING PESTWARE USING A SECONDARY OPERATING SYSTEM

KIMBERLY WHITE, EXAMINER
ASSIGNMENT SERVICES BRANCH
PUBLIC RECORDS DIVISION

PATENT ASSIGNMENT

Electronic Version v1.1
Stylesheet Version v1.1

SUBMISSION TYPE:	CORRECTIVE ASSIGNMENT
NATURE OF CONVEYANCE:	Corrective Assignment to correct the address of the Assignee FROM 2566 55th Street, Boulder, CO 80308 TO 2560 55th Street, Boulder, CO 80301 previously recorded on Reel 017484 Frame 0403. Assignor(s) hereby confirms the assignment.

CONVEYING PARTY DATA

Name	Execution Date
Phil Maddaloni	01/18/2006
Tony Nichols	01/18/2006

RECEIVING PARTY DATA

Name:	Webroot Software, Inc.
Street Address:	2560 55th Street
City:	Boulder
State/Country:	COLORADO
Postal Code:	80301

PROPERTY NUMBERS Total: 1

Property Type	Number
Application Number:	11334316

CORRESPONDENCE DATA

Fax Number: (202)842-7899
Correspondence will be sent via US Mail when the fax attempt is unsuccessful.
Phone: 7205664044
Email: sbitler@cooley.com
Correspondent Name: Cooley Godward Kronish LLP
Address Line 1: 777-6th Street NW, Suite 1100
Address Line 2: Attn: Thomas M. Croft, Esq.
Address Line 4: Washington, DISTRICT OF COLUMBIA 20001

ASSIGNMENT

WHEREAS, We, **Phil Maddaloni**, residing at 1486 Serene Dr., Erie, CO 80516, and **Tony Nichols**, residing at 436 Tynan Ct., Erie, CO 80516 (referred to as "Assignors") has made an invention(s) (the "Invention(s)") set forth in an application for patent of the United States, entitled **SYSTEM AND METHOD FOR IDENTIFYING AND REMOVING PESTWARE USING A SECONDARY OPERATING SYSTEM**, and which is a:

(1) [] provisional application
- (a) [] to be filed herewith; or
- (b) [] bearing Application No. , and filed on ; or

(2) [X] non-provisional application
- (a) [X] to be filed herewith; or
- (b) [] bearing Application No. , and filed on .

WHEREAS, Webroot, Inc., a corporation duly organized under and pursuant to the laws of Colorado, and having its principal place of business at 2560 55th Street, Suite 300, Boulder, Colorado 80308 (the "Assignee"), is desirous of acquiring the entire right, title, and interest in: the Invention(s); the application for patent identified in paragraph (1) or (2); the right to file applications for patent of the United States or other countries on the Invention(s); any application(s) for patent of the United States or other countries claiming priority to these application(s); any provisional or other right to recover damages, including royalties, for prior infringements of these applications; and any patent(s) of the United States or other countries that may be granted therefor or thereon.

80301

NOW, THEREFORE, for good and sufficient consideration, the receipt of which is hereby acknowledged, and to the extent that the Assignor has not done so already via a prior agreement with the Assignee, or if the Assignor has already done so via a prior agreement with the Assignee then in confirmation of any obligation to do so in said prior agreement, the Assignor has sold, assigned, transferred, and set over, and by these presents does sell, assign, transfer, and set over, unto the Assignee, its successors, legal representatives, and assigns, the Assignor's entire right, title, and interest in:

(a) the Invention(s);

(b) the application for patent identified in paragraph (1) or (2);

(c) the right to file applications for patent of the United States or other countries on the Invention(s), including all rights under the Hague Convention, the Paris Convention for the Protection of Industrial Property, and under the Patent Cooperation Treaty;

(d) any application(s) for patent of the United States or other countries claiming the Invention(s);

(e) any application(s) for patent of the United States or other countries claiming priority to the application for patent identified in paragraph (1) or (2) or any application(s) for patent claiming the Invention(s), including any division(s), continuation(s), and continuation(s)-in-part;

(f) any provisional or other right to recover damages, including royalties, for prior infringements of any application for patent identified in the proceeding paragraphs (b)-(e); and

(g) any patent(s) of the United States or other countries that may be granted for or on any application for patent identified in the preceding paragraphs (b) – (e), including any reissue(s) and extension(s) of said patent(s).

The above-granted rights, titles, and interests are to be held and enjoyed by the Assignee, for its own use and behalf and the use and behalf of its successors, legal representatives, and assigns, as fully and entirely as the same would have been held and enjoyed by the Assignor had this sale and assignment not been made.

The Assignors hereby represents to the Assignee, its successors, legal representatives, and assigns, that, at the time of execution and delivery of these presents, or if applicable, at such time said prior agreement was executed, the Assignors are the sole and lawful owner of the entire right, title, and interest in and to the Invention(s), that the Invention(s) are unencumbered, except, if applicable, by obligation to assign in accordance with said prior agreement, and that the Assignors have good and full right and lawful authority to sell and convey the same in the manner set forth herein.

The Assignors hereby covenants and agrees to and with the Assignee, its successors, legal representatives, and assigns, that the Assignors will sign all papers and documents, take all lawful oaths, and do all acts necessary or required to be done in connection with any and all proceedings for the procurement, maintenance, enforcement and defense of the Invention(s), said applications, and said patents, including interference proceedings, without charge to the Assignee, its successors, legal representatives, and assigns, but at the cost and expense of the Assignee, its successors, legal representatives, and assigns.

The Assignors hereby authorizes and requests the attorneys of COOLEY GODWARD L.L.P. to insert in the spaces provided above the filing date, the application number, and the attorney docket number of the application identified in paragraph (1) or (2) when known.

The Assignors hereby requests the Commissioner of Patents to issue said patents of the United States to the Assignee for the sole use and behalf of the Assignee, its successors, legal representatives, and assigns.

Date: 1/18/06 By: **Phil Maddaloni**

State of _____)
ss.
County of_____)

On _____, before me, _____, personally appeared **Phil Maddaloni**, personally known to me or proved to me on the basis of satisfactory evidence, to be the person(s) whose name(s) is/are subscribed to the within instrument and acknowledged to me that he/she/they executed the same in his/her/their authorized capacity(ies), and that by his/her/their signature(s) on the instrument the person(s), or the entity upon behalf of which the person(s) acted, executed the instrument.

WITNESS my hand and official seal.

_____
Signature of Natory Public Place Notary Seal Above

Date: 1/18/06 By: **Tony Nichols**

State of _____)
ss.
County of_____)

On _____, before me, _____, personally appeared **Tony Nichols**, personally known to me or proved to me on the basis of satisfactory evidence, to be the person(s) whose name(s) is/are subscribed to the within instrument and acknowledged to me that he/she/they executed the same in his/her/their authorized capacity(ies), and that by his/her/their signature(s) on the instrument the person(s), or the entity upon behalf of which the person(s) acted, executed the instrument.

WITNESS my hand and official seal.

_____
Signature of Natory Public Place Notary Seal Above

SOD
WEBR-027/00US

UNITED STATES PATENT AND TRADEMARK OFFICE

UNDER SECRETARY OF COMMERCE FOR INTELLECTUAL PROPERTY AND
DIRECTOR OF THE UNITED STATES PATENT AND TRADEMARK OFFICE

APRIL 18, 2006

PTAS

103165471A

COOLEY GODWARD LLP
PATENT GROUP
ONE FREEDOM SQUARE, RESTON TOWN CENTER
11951 FREEDOM DRIVE
RESTON, VA 20190-5656

UNITED STATES PATENT AND TRADEMARK OFFICE
NOTICE OF RECORDATION OF ASSIGNMENT DOCUMENT

THE ENCLOSED DOCUMENT HAS BEEN RECORDED BY THE ASSIGNMENT DIVISION OF THE U.S. PATENT AND TRADEMARK OFFICE. A COMPLETE MICROFILM COPY IS AVAILABLE AT THE ASSIGNMENT SEARCH ROOM ON THE REEL AND FRAME NUMBER REFERENCED BELOW.

PLEASE REVIEW ALL INFORMATION CONTAINED ON THIS NOTICE. THE INFORMATION CONTAINED ON THIS RECORDATION NOTICE REFLECTS THE DATA PRESENT IN THE PATENT AND TRADEMARK ASSIGNMENT SYSTEM. IF YOU SHOULD FIND ANY ERRORS OR HAVE QUESTIONS CONCERNING THIS NOTICE, YOU MAY CONTACT THE EMPLOYEE WHOSE NAME APPEARS ON THIS NOTICE AT 571-272-3350. PLEASE SEND REQUEST FOR CORRECTION TO: U.S. PATENT AND TRADEMARK OFFICE, MAIL STOP: ASSIGNMENT SERVICES BRANCH, P.O. BOX 1450, ALEXANDRIA, VA 22313.

RECORDATION DATE: 01/18/2006 REEL/FRAME: 017484/0403
NUMBER OF PAGES: 4

BRIEF: ASSIGNMENT OF ASSIGNOR'S INTEREST (SEE DOCUMENT FOR DETAILS).

ASSIGNOR:
MADDALONI, PHIL DOC DATE: 01/18/2006

ASSIGNOR:
NICHOLS, TONY DOC DATE: 01/18/2006

ASSIGNEE:
WEBROOT SOFTWARE, INC.
2560 2566 55TH STREET
BOULDER, COLORADO 80308 80301

SERIAL NUMBER: 11334316 FILING DATE: 01/18/2006
PATENT NUMBER: ISSUE DATE:
TITLE: SYSTEM AND METHOD FOR IDENTIFYING AND REMOVING PESTWARE USING A SECONDARY OPERATING SYSTEM

RECEIVED
APR 24 2006
COOLEY GODWARD LLP

SHARON BROOKS, EXAMINER
ASSIGNMENT SERVICES BRANCH
PUBLIC RECORDS DIVISION

Electronic Patent Application Fee Transmittal

Application Number:	11408146
Filing Date:	20-Apr-2006
Title of Invention:	Backwards researching activity indicative of pestware
First Named Inventor/Applicant Name:	Matthew L. Boney
Filer:	Mark Randolph Schafer
Attorney Docket Number:	WEBR-044/00US 303666-2049

Filed as Large Entity

Utility under 35 USC 111(a) Filing Fees

Description	Fee Code	Quantity	Amount	Sub-Total in USD($)
Basic Filing:				
Pages:				
Claims:				
Miscellaneous-Filing:				
Petition:				
Patent-Appeals-and-Interference:				
Post-Allowance-and-Post-Issuance:				
Extension-of-Time:				

Description	Fee Code	Quantity	Amount	Sub-Total in USD($)
Miscellaneous:				
Request for continued examination	1801	1	810	810
		Total in USD ($)		**810**

Electronic Acknowledgement Receipt

EFS ID:	9408323
Application Number:	11408146
International Application Number:	
Confirmation Number:	8009
Title of Invention:	Backwards researching activity indicative of pestware
First Named Inventor/Applicant Name:	Matthew L. Boney
Customer Number:	22903
Filer:	Mark Randolph Schafer/Sherry Bitler
Filer Authorized By:	Mark Randolph Schafer
Attorney Docket Number:	WEBR-044/00US 303666-2049
Receipt Date:	09-FEB-2011
Filing Date:	20-APR-2006
Time Stamp:	17:56:05
Application Type:	Utility under 35 USC 111(a)

Payment information:

Submitted with Payment	yes
Payment Type	Deposit Account
Payment was successfully received in RAM	$810
RAM confirmation Number	4705
Deposit Account	501283
Authorized User	
The Director of the USPTO is hereby authorized to charge indicated fees and credit any overpayment as follows: Charge any Additional Fees required under 37 C.F.R. Section 1.17 (Patent application and reexamination processing fees)	

File Listing:

Document Number	Document Description	File Name	File Size(Bytes)/ Message Digest	Multi Part /.zip	Pages (if appl.)
1	Request for Continued Examination (RCE)	WEBR04400US-2011-02-08-rce.pdf	81577 033d230b7f5d886ae167f5de17239df96e7039bd	no	1
Warnings:					
This is not a USPTO supplied RCE SB30 form.					
Information:					
2	Amendment Submitted/Entered with Filing of CPA/RCE	WEBR04400US-2011-02-09-roa.pdf	922178 43b4234cbb562385928af212c6fc0c0a69f1fdcd	no	24
Warnings:					
Information:					
3	Fee Worksheet (PTO-875)	fee-info.pdf	30181 4effda4dad25764efc32528a52a1fd0ad8aa4d93	no	2
Warnings:					
Information:					
		Total Files Size (in bytes):	1033936		

This Acknowledgement Receipt evidences receipt on the noted date by the USPTO of the indicated documents, characterized by the applicant, and including page counts, where applicable. It serves as evidence of receipt similar to a Post Card, as described in MPEP 503.

<u>New Applications Under 35 U.S.C. 111</u>
If a new application is being filed and the application includes the necessary components for a filing date (see 37 CFR 1.53(b)-(d) and MPEP 506), a Filing Receipt (37 CFR 1.54) will be issued in due course and the date shown on this Acknowledgement Receipt will establish the filing date of the application.

<u>National Stage of an International Application under 35 U.S.C. 371</u>
If a timely submission to enter the national stage of an international application is compliant with the conditions of 35 U.S.C. 371 and other applicable requirements a Form PCT/DO/EO/903 indicating acceptance of the application as a national stage submission under 35 U.S.C. 371 will be issued in addition to the Filing Receipt, in due course.

<u>New International Application Filed with the USPTO as a Receiving Office</u>
If a new international application is being filed and the international application includes the necessary components for an international filing date (see PCT Article 11 and MPEP 1810), a Notification of the International Application Number and of the International Filing Date (Form PCT/RO/105) will be issued in due course, subject to prescriptions concerning national security, and the date shown on this Acknowledgement Receipt will establish the international filing date of the application.

PTO/SB/06 (07-06)
Approved for use through 1/31/2007. OMB 0651-0032
U.S. Patent and Trademark Office; U.S. DEPARTMENT OF COMMERCE
Under the Paperwork Reduction Act of 1995, no persons are required to respond to a collection of information unless it displays a valid OMB control number.

PATENT APPLICATION FEE DETERMINATION RECORD

Substitute for Form PTO-875

Application or Docket Number	Filing Date	☐ To be Mailed
11/408,146	04/20/2006	

APPLICATION AS FILED – PART I

FOR	(Column 1) NUMBER FILED	(Column 2) NUMBER EXTRA	SMALL ENTITY ☐ RATE ($)	SMALL ENTITY FEE ($)	OR	OTHER THAN SMALL ENTITY RATE ($)	OTHER THAN SMALL ENTITY FEE ($)
☐ BASIC FEE (37 CFR 1.16(a), (b), or (c))	N/A	N/A	N/A			N/A	
☐ SEARCH FEE (37 CFR 1.16(k), (i), or (m))	N/A	N/A	N/A			N/A	
☐ EXAMINATION FEE (37 CFR 1.16(o), (p), or (q))	N/A	N/A	N/A			N/A	
TOTAL CLAIMS (37 CFR 1.16(i))	minus 20 =	*	X $ =		OR	X $ =	
INDEPENDENT CLAIMS (37 CFR 1.16(h))	minus 3 =	*	X $ =			X $ =	
☐ APPLICATION SIZE FEE (37 CFR 1.16(s))	If the specification and drawings exceed 100 sheets of paper, the application size fee due is $250 ($125 for small entity) for each additional 50 sheets or fraction thereof. See 35 U.S.C. 41(a)(1)(G) and 37 CFR 1.16(s).						
☐ MULTIPLE DEPENDENT CLAIM PRESENT (37 CFR 1.16(j))							
* If the difference in column 1 is less than zero, enter "0" in column 2.			TOTAL			TOTAL	

APPLICATION AS AMENDED – PART II

AMENDMENT 02/09/2011	(Column 1) CLAIMS REMAINING AFTER AMENDMENT		(Column 2) HIGHEST NUMBER PREVIOUSLY PAID FOR	(Column 3) PRESENT EXTRA	SMALL ENTITY RATE ($)	SMALL ENTITY ADDITIONAL FEE ($)	OR	OTHER THAN SMALL ENTITY RATE ($)	OTHER THAN SMALL ENTITY ADDITIONAL FEE ($)
Total (37 CFR 1.16(i))	* 22	Minus	** 22	= 0	X $ =		OR	X $52=	0
Independent (37 CFR 1.16(h))	* 3	Minus	***3	= 0	X $ =		OR	X $220=	0
☐ Application Size Fee (37 CFR 1.16(s))									
☐ FIRST PRESENTATION OF MULTIPLE DEPENDENT CLAIM (37 CFR 1.16(j))							OR		
					TOTAL ADD'L FEE		OR	TOTAL ADD'L FEE	0

AMENDMENT	(Column 1) CLAIMS REMAINING AFTER AMENDMENT		(Column 2) HIGHEST NUMBER PREVIOUSLY PAID FOR	(Column 3) PRESENT EXTRA	RATE ($)	ADDITIONAL FEE ($)	OR	RATE ($)	ADDITIONAL FEE ($)
Total (37 CFR 1.16(i))	*	Minus	**	=	X $ =		OR	X $ =	
Independent (37 CFR 1.16(h))	*	Minus	***	=	X $ =		OR	X $ =	
☐ Application Size Fee (37 CFR 1.16(s))									
☐ FIRST PRESENTATION OF MULTIPLE DEPENDENT CLAIM (37 CFR 1.16(j))							OR		
					TOTAL ADD'L FEE		OR	TOTAL ADD'L FEE	

* If the entry in column 1 is less than the entry in column 2, write "0" in column 3.
** If the "Highest Number Previously Paid For" IN THIS SPACE is less than 20, enter "20".
*** If the "Highest Number Previously Paid For" IN THIS SPACE is less than 3, enter "3".
The "Highest Number Previously Paid For" (Total or Independent) is the highest number found in the appropriate box in column 1.

Legal Instrument Examiner:
/PARTHENIA MERRILL/

This collection of information is required by 37 CFR 1.16. The information is required to obtain or retain a benefit by the public which is to file (and by the USPTO to process) an application. Confidentiality is governed by 35 U.S.C. 122 and 37 CFR 1.14. This collection is estimated to take 12 minutes to complete, including gathering, preparing, and submitting the completed application form to the USPTO. Time will vary depending upon the individual case. Any comments on the amount of time you require to complete this form and/or suggestions for reducing this burden, should be sent to the Chief Information Officer, U.S. Patent and Trademark Office, U.S. Department of Commerce, P.O. Box 1450, Alexandria, VA 22313-1450. DO NOT SEND FEES OR COMPLETED FORMS TO THIS ADDRESS. **SEND TO: Commissioner for Patents, P.O. Box 1450, Alexandria, VA 22313-1450.**
If you need assistance in completing the form, call 1-800-PTO-9199 and select option 2.

UNITED STATES PATENT AND TRADEMARK OFFICE

UNITED STATES DEPARTMENT OF COMMERCE
United States Patent and Trademark Office
Address: COMMISSIONER FOR PATENTS
P.O. Box 1450
Alexandria, Virginia 22313-1450
www.uspto.gov

APPLICATION NO.	FILING DATE	FIRST NAMED INVENTOR	ATTORNEY DOCKET NO.	CONFIRMATION NO.
11/408,146	04/20/2006	Matthew L. Boney	WEBR-044/00US 303666-2049	8009

22903 7590 11/10/2010
COOLEY LLP
ATTN: PATENT GROUP
Suite 1100
777 - 6th Street, NW
WASHINGTON, DC 20001

EXAMINER
RAHMAN, MAHFUZUR

ART UNIT	PAPER NUMBER
2438	

MAIL DATE	DELIVERY MODE
11/10/2010	PAPER

Please find below and/or attached an Office communication concerning this application or proceeding.

The time period for reply, if any, is set in the attached communication.

Office Action Summary	Application No.	Applicant(s)	
	11/408,146	BONEY, MATTHEW L.	
	Examiner	Art Unit	
	MAHFUZUR RAHMAN	2438	

-- The MAILING DATE of this communication appears on the cover sheet with the correspondence address --

Period for Reply

A SHORTENED STATUTORY PERIOD FOR REPLY IS SET TO EXPIRE 3 MONTH(S) OR THIRTY (30) DAYS, WHICHEVER IS LONGER, FROM THE MAILING DATE OF THIS COMMUNICATION.

- Extensions of time may be available under the provisions of 37 CFR 1.136(a). In no event, however, may a reply be timely filed after SIX (6) MONTHS from the mailing date of this communication.
- If NO period for reply is specified above, the maximum statutory period will apply and will expire SIX (6) MONTHS from the mailing date of this communication.
- Failure to reply within the set or extended period for reply will, by statute, cause the application to become ABANDONED (35 U.S.C. § 133). Any reply received by the Office later than three months after the mailing date of this communication, even if timely filed, may reduce any earned patent term adjustment. See 37 CFR 1.704(b).

Status

1)☒ Responsive to communication(s) filed on 20 August 2010.

2a)☒ This action is **FINAL**. 2b)☐ This action is non-final.

3)☐ Since this application is in condition for allowance except for formal matters, prosecution as to the merits is closed in accordance with the practice under *Ex parte Quayle*, 1935 C.D. 11, 453 O.G. 213.

Disposition of Claims

4)☒ Claim(s) 1-22 is/are pending in the application.

4a) Of the above claim(s) _____ is/are withdrawn from consideration.

5)☐ Claim(s) _____ is/are allowed.

6)☒ Claim(s) 1-22 is/are rejected.

7)☐ Claim(s) _____ is/are objected to.

8)☐ Claim(s) _____ are subject to restriction and/or election requirement.

Application Papers

9)☐ The specification is objected to by the Examiner.

10)☒ The drawing(s) filed on 20 April 2006 is/are: a)☒ accepted or b)☐ objected to by the Examiner.

Applicant may not request that any objection to the drawing(s) be held in abeyance. See 37 CFR 1.85(a).

Replacement drawing sheet(s) including the correction is required if the drawing(s) is objected to. See 37 CFR 1.121(d).

11)☐ The oath or declaration is objected to by the Examiner. Note the attached Office Action or form PTO-152.

Priority under 35 U.S.C. § 119

12)☐ Acknowledgment is made of a claim for foreign priority under 35 U.S.C. § 119(a)-(d) or (f).

a)☐ All b)☐ Some * c)☐ None of:

1.☐ Certified copies of the priority documents have been received.

2.☐ Certified copies of the priority documents have been received in Application No. _____.

3.☐ Copies of the certified copies of the priority documents have been received in this National Stage application from the International Bureau (PCT Rule 17.2(a)).

* See the attached detailed Office action for a list of the certified copies not received.

Attachment(s)

1) ☒ Notice of References Cited (PTO-892)
2) ☐ Notice of Draftsperson's Patent Drawing Review (PTO-948)
3) ☐ Information Disclosure Statement(s) (PTO/SB/08) Paper No(s)/Mail Date _____.
4) ☐ Interview Summary (PTO-413) Paper No(s)/Mail Date. _____ .
5) ☐ Notice of Informal Patent Application
6) ☐ Other: _____.

DETAILED ACTION

Applicant's amendment filed 08/20/2010 is acknowledged. Claims 1-3, 9, 15, and 17-19 have been amended. Claims 1-22 are examined and pending.

Response to Arguments

1. Applicant's amendment to the claims 1, 9, and 16 filed on August 20, 2010 necessitated a new ground of rejection presented in this office action. The previously presented rejections have changed because the new limitations "an externally networked source" have been added to the claims. Thus applicant's arguments filed on August 20, 2010 have been rendered moot in view of the new ground(s) of rejection. The reference of Maddaloni has been introduced to the references of Wang to address the newly added limitations. The reasons of obviousness are included below in this office action.

Claims 1-22 are now rejected under 35 U.S.C. 103(a) as being unpatentable over Wang et al. (US 2005/0268112 A1, hereinafter, Wang) in view of in view of Maddaloni et al. (US 2007/0168694 A1, hereinafter, Maddaloni).

Claim Rejections - 35 USC § 103

2. The following is a quotation of 35 U.S.C. 103(a) which forms the basis for all obviousness rejections set forth in this Office action:

> (a) A patent may not be obtained though the invention is not identically disclosed or described as set forth in section 102 of this title, if the differences between the subject matter sought to be patented and the prior art are such that the subject matter as a whole would have been obvious at the time the invention was made to a person having ordinary skill in the art to which said subject matter pertains. Patentability shall not be negatived by the manner in which the invention was made.

3. The factual inquiries set forth in *Graham* **v.** *John Deere Co.*, 383 U.S. 1, 148 USPQ 459 (1966), that are applied for establishing a background for determining obviousness under 35 U.S.C. 103(a) are summarized as follows:

1. Determining the scope and contents of the prior art.
2. Ascertaining the differences between the prior art and the claims at issue.
3. Resolving the level of ordinary skill in the pertinent art.
4. Considering objective evidence present in the application indicating obviousness or nonobviousness.

4. Claims 1-22 are rejected under 35 U.S.C. 103(a) as being unpatentable over Wang et al. (US 2005/0268112 A1, hereinafter, Wang) in view of in view of Maddaloni et al. (US 2007/0168694 A1, hereinafter, Maddaloni).

Regarding claim 1, Wang discloses a method for identifying an origin of activity on a computer that is indicative of pestware comprising:

monitoring the computer for activity that is indicative of pestware (Paragraph 0042: monitoring activity on a given machine infected with spyware using known-good and known-bad signatures);

identifying, based upon the activity, an object residing on the computer that is a suspected pestware object (Paragraphs 0009-0010: monitoring ASEP-hook related activity and identifying potential unwanted software such as new or unknown spyware); and

accessing at least a portion of a recorded history of [externally networked sources] that the computer received files from so as to identify [a reference] to an identity of a particular externally networked source that the suspected pestware object originated from (Paragraph 0050: Although web browser history may already record the URL and timestamp for every Web site visited, it is typically a global history for all instances of the browser. By correlating the URL Trace Log entries with entries from a bundle tracing log, the source URL of Web-based installation is identified).

Wang does not explicitly disclose but Maddaloni from the same or similar fields of endeavor teaches a reference to an identity of a particular source that the suspected pestware object originated from (Maddaloni, Claim 14: scanning portions of memory for indicia of pestware activity that are offset from reference points in the executable memory) and

an externally networked source (Maddaloni, Paragraph 0033: pestware definitions and/or updated anti-pestware code to be retrieved from the external memory source 130; Fig. 1 External Networked Source 130) wherein

pestware object is being identified based on activity (Maddaloni, Paragraph 0028: identify any suspect entries that are indicia of potential pestware activity)

Therefore, it would have been obvious to one of ordinary skill in the art at the time of the invention to use a reference to an identity of pestware originated from externally networked source as taught by Maddaloni in the teachings of Wang for the advantage of providing an anti-pestware application or service to carry out pestware identification, pestware prevention, pestware removal and/or pestware disablement (Paragraph 0019).

Regarding claim 2, the combination of Wang and Maddaloni discloses the method of claim 1, including:

reporting the identity of the particular externally networked source to a pestware research entity so as to enable the pestware research entity to research whether the particular externally networked source is a source of pestware (Wang, Paragraph 0041: An event log is maintained to store details of software installations, including timestamp and process identification number of the installing process along with a Gatekeeper Browser Helper Object (BHO) for monitoring activity related to potential spyware).

Regarding claim 3, the combination of Wang and Maddaloni discloses the method of claim 1, wherein the particular externally networked source is identified by an identifier selected from the group consisting of an I.P. address and a URL (Wang, Paragraph 0050: the source URL is identified using the URLs recorded by Browser Helper Object (BHO)).

Regarding claim 4, the combination of Wang and Maddaloni discloses the method of claim 3, wherein the identifying includes accessing an activity log that includes information that relates the activity to the suspected pestware object (Wang, Paragraph 0039: Gatekeeper Browser Helper Object (BHO) records URLs in a uniform resource locator (URL) trace log, which stores the history of the visited URLs) .

Regarding claim 5, the combination of Wang and Maddaloni discloses the method of claim 1, wherein the monitoring includes monitoring the computer for activity with a kernel-mode driver (Wang, Paragraph 0062: Loadable Kernel Modules (LKMs) are placed the directory libraries).

Regarding claim 6, the combination of Wang and Maddaloni discloses the method of claim 5, wherein the monitoring includes heuristically analyzing the activity so as to arrive at a determination that the activity is indicative of pestware (Wang, Paragraph 0053: analyzing Registry and file traces collected from any machine to discover new ASEPs that can potentially be hooked by future spyware) .

Regarding claim 7, the combination of Wang and Maddaloni discloses the method of claim 1, wherein the recorded history resides in a browser cache, which includes information about files downloaded to the computer and a source of each of

the files (Wang, Paragraph 0041: an event log and browser history of visited web pages is recorded).

Regarding claim 8, the combination of Wang and Maddaloni discloses the method of claim 1, wherein the recorded history resides in at least one log selected from the group consisting of an activity log, a browser history, browser cache, browser settings, operating system settings, an event log, a debugging log, a firewall log, file information and monitoring software logs (Wang, Paragraph 0041: an event log and browser history of visited web pages is recorded).

Regarding claim 9, Wang discloses a system for identifying a source of activity on a computer that is indicative of pestware including:

a heuristics module configured to identify activity on the computer that is indicative of pestware residing on the computer (Paragraph 0013: computer-executable instructions is provided for facilitating the identifying of potential unwanted software); and

a research portion configured to access a first set of recorded information on the computer that relates the activity to at least one file residing an the computer (Paragraph 0053: analyzing Registry and file traces collected from any machine to discover new ASEPs that can potentially be hooked by future spyware; Paragraph 0054: analyze the System Restore file change log), and

wherein the research portion is configured to access a second set of recorded

information on the computer that [relates the at least one file to an externally networked source] from which the file was received (Paragraph 0050: By correlating the URL Trace Log entries with entries from a bundle tracing log, the source URL of Web-based installation is identified).; and

a reporting portion configured to generate a report that identifies the externally networked source of the file (Paragraph 0057: a report is being generated by "auto-start trace log" component that contains all ASEP (Auto-Start Extensibility Points) hooks made by the spyware).

Wang does not explicitly disclose but Maddaloni from the same or similar fields of endeavor teaches accessing a second set of recorded information on the computer (Maddaloni, Paragraph 0055: the second anti-pestware module is configured to directly access (e.g., to scan for pestware while circumventing the operating systems 522, 528) both, memory utilized by the primary operating system 522 and the primary operating system partition 580 of the storage device 506; Claim 14: scanning portions of memory for indicia of pestware activity that are offset from reference points in the executable memory) wherein

the information relates to an externally networked source (Maddaloni, Paragraph 0033: pestware definitions and/or updated anti-pestware code to be retrieved from the external memory source 130; Fig. 1 External Networked Source 130) and

the pestware object is being identified based on the activity (Maddaloni, Paragraph 0028: identify any suspect entries that are indicia of potential pestware activity)

Therefore, it would have been obvious to one of ordinary skill in the art at the time of the invention accessing a second set of recorded information on the computer that relates to an externally networked source as taught by Maddaloni in the teachings of Wang for the advantage of utilizing the secondary operating system to identify indicia of pestware-related activity on the computer and managing the pestware-related activity (Paragraph 0007).

Regarding claim 10, the combination of Wang and Maddaloni discloses the system of claim 9, including: an activity monitor configured to monitor API calls and to store a history of at least a portion of the API calls in an activity log (Wang, Paragraph 0039: API calls are gathered by software tool called Gatekeeper).

Regarding claim 11, the combination of Wang and Maddaloni discloses the system of claim 10, wherein activity monitor is configured to store an identity of each process that made each of the API calls in the stored history (Wang, Paragraph 0039: Gatekeeper Browser Helper Object (BHO) records URLs in a uniform resource locator (URL) trace log, which stores the history of the visited URLs), and wherein the activity monitor is configured to store an identity of each file that corresponds to each the processes that made the API calls in the stored history so as to create a relation between each API call and at least one file (Paragraph 0039: Gatekeeper engine communicates with the operating system through APIs and gather information from data files accessed via the file system).

Regarding claim 12, the combination of Wang and Maddaloni discloses the system of claim 10, wherein the heuristics module is configured to receive information about the API calls from the activity monitor and determine whether the API calls are indicative of pestware (Wang, Paragraph 0053: analyzing Registry and file traces collected from any machine to discover new ASEPs that can potentially be hooked by spyware).

Regarding claim 13, the combination of Wang and Maddaloni discloses the system of claim 10, wherein the activity monitor includes a kernel-mode driver adapted to intercept the API calls (Wang, Paragraph 0062: Loadable Kernel Modules (LKMs) are placed the directory libraries).

Regarding claim 14, the combination of Wang and Maddaloni discloses the system of claim 9, wherein the first set of recorded information and the second set of recorded information reside in the same log file on a file storage device of the computer (Wang, Paragraph 0041: a Gatekeeper Browser Helper Object (BHO) records (URL) trace log, which stores the URL and timestamp of web pages visited by the browser, along with the process identification number. An event log is also maintained to store details of software installations, including timestamp and process identification number of the installing process).

Regarding claim 15, the combination of Wang and Maddaloni discloses the system of claim 9, wherein the externally networked source is identified by an identifier selected from the group consisting of an I.P. address and a URL (Wang, Paragraph 0050: the source URL is identified using the URLs recorded by Browser Helper Object (BHO)).

Regarding claim 16, the combination of Wang and Maddaloni discloses the system of claim 9, wherein the recorded history resides in at least one log selected from the group consisting of an activity log, a browser history, browser cache, browser settings, operating system settings, an event log, a debugging log, a firewall log, file information and monitoring software logs (Wang, Paragraph 0041: an event log and browser history of visited web pages is recorded).

Regarding claim 17, Wang discloses a computer-readable medium including processor-executable instructions for identifying an origin of activity on a computer that is indicative of pestware, the instructions including instructions for:

monitoring the computer for activity that is indicative of pestware (Paragraph 0042: monitoring activity on a given machine infected with spyware using known-good and known-bad signatures);

identifying, based upon the activity, an object residing on the computer that is a suspected pestware object (Paragraphs 0009-0010: monitoring ASEP-hook related activity and identifying potential unwanted software such as new or unknown spyware);

and

accessing at least a portion of a recorded history of externally networked sources that the computer received files from so as to identify a reference to an identity of a particular [externally networked source] that the suspected pestware object originated from (Paragraph 0050: Although web browser history may already record the URL and timestamp for every Web site visited, it is typically a global history for all instances of the browser. By correlating the URL Trace Log entries with entries from a bundle tracing log, the source URL of Web-based installation is identified).

Wang does not explicitly disclose but Maddaloni from the same or similar fields of endeavor teaches a reference to an identity of a particular source that the suspected pestware object originated from (Maddaloni, Claim 14: scanning portions of memory for indicia of pestware activity that are offset from reference points in the executable memory) and

an externally networked source (Maddaloni, Paragraph 0033: pestware definitions and/or updated anti-pestware code to be retrieved from the external memory source 130; Fig. 1 External Networked Source 130) wherein

pestware object is being identified based on activity (Maddaloni, Paragraph 0028: identify any suspect entries that are indicia of potential pestware activity)

Therefore, it would have been obvious to one of ordinary skill in the art at the time of the invention to use a reference to an identity of pestware originated from externally networked source as taught by Maddaloni in the teachings of Wang for the advantage of providing an anti-pestware application or service to carry out pestware

identification, pestware prevention, pestware removal and/or pestware disablement (Paragraph 0019).

Regarding claim 18, the combination of Wang and Maddaloni discloses the computer-readable medium of claim 17, including instructions for: reporting the identity of the particular web site to a pestware research entity so as to enable the pestware research entity to research whether the particular externally networked source is a source of pestware (Wang, Paragraph 0041: An event log is maintained to store details of software installations, including timestamp and process identification number of the installing process along with a Gatekeeper Browser Helper Object (BHO) for monitoring activity related to potential spyware).

Regarding claim 19, the combination of Wang and Maddaloni discloses the computer-readable medium of claim 17, wherein the particular externally networked source is identified by an identifier selected from the group consisting of an I.P. address and a URL (Wang, Paragraph 0050: the source URL is identified using the URLs recorded by Browser Helper Object (BHO)).

Regarding claim 20, the combination of Wang and Maddaloni discloses the computer-readable medium Of claim 17, wherein the instructions for monitoring include instructions for monitoring the computer for activity with a kernel- mode driver (Wang, Paragraph 0062: Loadable Kernel Modules (LKMs) are placed the directory libraries).

Regarding claim 21, the combination of Wang and Maddaloni discloses the computer-readable medium of claim 20, wherein the instructions for monitoring include instructions for heuristically analyzing the activity so as to arrive at a determination that the activity is indicative of pestware (Wang, Paragraph 0053: analyzing Registry and file traces collected from any machine to discover new ASEPs that can potentially be hooked by future spyware).

Regarding claim 22, the combination of Wang and Maddaloni discloses the computer-readable medium of claim 17, wherein the recorded history resides in at least one log selected from the group consisting of an activity log, a browser history, browser cache, browser settings, operating system settings, an event log, a debugging log, a firewall log, file information and monitoring software logs (Wang, Paragraph 0041: an event log and browser history of visited web pages is recorded).

Conclusion

5. Applicant's amendment necessitated the new ground(s) of rejection presented in this Office action. Accordingly, **THIS ACTION IS MADE FINAL**. See MPEP § 706.07(a). Applicant is reminded of the extension of time policy as set forth in 37 CFR 1.136(a).

A shortened statutory period for reply to this final action is set to expire THREE MONTHS from the mailing date of this action. In the event a first reply is filed within TWO MONTHS of the mailing date of this final action and the advisory action is not mailed until after the end of the THREE-MONTH shortened statutory period, then the shortened statutory period will expire on the date the advisory action is mailed, and any extension fee pursuant to 37 CFR 1.136(a) will be calculated from the mailing date of the advisory action. In no event, however, will the statutory period for reply expire later than SIX MONTHS from the mailing date of this final action.

Any inquiry concerning this communication or earlier communications from the examiner should be directed to MAHFUZUR RAHMAN whose telephone number is (571)270-7638. The examiner can normally be reached on Monday thru Friday.

If attempts to reach the examiner by telephone are unsuccessful, the examiner's supervisor, Taghi T. Arani can be reached on (571)272-3787. The fax phone number for the organization where this application or proceeding is assigned is 571-273-8300.

Information regarding the status of an application may be obtained from the Patent Application Information Retrieval (PAIR) system. Status information for published applications may be obtained from either Private PAIR or Public PAIR. Status information for unpublished applications is available through Private PAIR only. For more information about the PAIR system, see http://pair-direct.uspto.gov. Should you have questions on access to the Private PAIR system, contact the Electronic Business Center (EBC) at 866-217-9197 (toll-free). If you would like assistance from a

USPTO Customer Service Representative or access to the automated information system, call 800-786-9199 (IN USA OR CANADA) or 571-272-1000.

/M. R./
Examiner, Art Unit 2438

/Taghi T. Arani/
Supervisory Patent Examiner, Art Unit 2438

Notice of References Cited	Application/Control No. 11/408,146	Applicant(s)/Patent Under Reexamination BONEY, MATTHEW L.	
	Examiner MAHFUZUR RAHMAN	Art Unit 2438	Page 1 of 1

U.S. PATENT DOCUMENTS

*		Document Number Country Code-Number-Kind Code	Date MM-YYYY	Name	Classification
*	A	US-2003/0065943 A1	04-2003	Geis et al.	713/201
*	B	US-2003/0159070 A1	08-2003	Mayer et al.	713/201
*	C	US-2006/0085528 A1	04-2006	Thomas, Steve	709/223
*	D	US-2006/0230290 A1	10-2006	Burtscher, Michael	713/188
*	E	US-2007/0074289 A1	03-2007	Maddaloni, Phil	726/023
*	F	US-2007/0169198 A1	07-2007	Madddaloni et al.	726/024
*	G	US-2007/0168694 A1	07-2007	Maddaloni et al.	714/004
*	H	US-2007/0220043 A1	09-2007	Oliver et al.	707/103.R
	I	US-			
	J	US-			
	K	US-			
	L	US-			
	M	US-			

FOREIGN PATENT DOCUMENTS

*		Document Number Country Code-Number-Kind Code	Date MM-YYYY	Country	Name	Classification
	N					
	O					
	P					
	Q					
	R					
	S					
	T					

NON-PATENT DOCUMENTS

*		Include as applicable: Author, Title Date, Publisher, Edition or Volume, Pertinent Pages)
	U	
	V	
	W	
	X	

*A copy of this reference is not being furnished with this Office action. (See MPEP § 707.05(a).)
Dates in MM-YYYY format are publication dates. Classifications may be US or foreign.

Search Notes	Application/Control No.	Applicant(s)/Patent Under Reexamination
	11408146	BONEY, MATTHEW L.
	Examiner	**Art Unit**
	MAHFUZUR RAHMAN	2438

SEARCHED

Class	Subclass	Date	Examiner
726	22	11/6/2010	MR

SEARCH NOTES

Search Notes	Date	Examiner
East search, search terms used: (external or outside), network or domain, indication or indicia or reference or map$4 or link$3, source, origin$4, referenc$3, url, link, IP address, event, trace, log, pestware, maleware, spamware, adware, scumware.	11/6/2010	MR
Keyword search of 726/27; 713/164,202;380/279;717/124	11/6/2010	MR
Performed Inventor/Assignee name search	11/6/2010	MR

INTERFERENCE SEARCH

Class	Subclass	Date	Examiner

/MAHFUZUR RAHMAN/ Examiner.Art Unit 2438	

Index of Claims	Application/Control No.	Applicant(s)/Patent Under Reexamination
	11408146	BONEY, MATTHEW L.
	Examiner	**Art Unit**
	MAHFUZUR RAHMAN	2438

✓	Rejected	-	Cancelled	N	Non-Elected	A	Appeal
=	Allowed	÷	Restricted	I	Interference	O	Objected

☐ Claims renumbered in the same order as presented by applicant ☐ CPA ☐ T.D. ☐ R.1.47

CLAIM		DATE								
Final	Original	02/12/2010								
	1	✓								
	2	✓								
	3	✓								
	4	✓								
	5	✓								
	6	✓								
	7	✓								
	8	✓								
	9	✓								
	10	✓								
	11	✓								
	12	✓								
	13	✓								
	14	✓								
	15	✓								
	16	✓								
	17	✓								
	18	✓								
	19	✓								
	20	✓								
	21	✓								
	22	✓								

EAST Search History

EAST Search History (Prior Art)

Ref #	Hits	Search Query	DBs	Default Operator	Plurals	Time Stamp
L12	22	(source or origin$5) with pestware same2 (indication or indicia or reference or map$4 or link $3)	US-PGPUB; USPAT; FPRS; EPO; JPO; DERWENT	OR	ON	2010/11/06 13:03
L14	5	12 and (external or outside) and (network or domain)	US-PGPUB; USPAT; FPRS; EPO; JPO; DERWENT	OR	ON	2010/11/06 13:04
L15	5	14 and (@ad<"20060420" or rlad <"20060420")	US-PGPUB; USPAT; FPRS; EPO; JPO; DERWENT	OR	ON	2010/11/06 13:06
L18	10	12 and ((@ad or @rlad) <"20060420")	US-PGPUB; USPAT; FPRS; EPO; JPO; DERWENT	OR	ON	2010/11/06 13:11
S11	89	("20020162015" | "20020162017" | "20020166063" | "20030065943" | "20030074581" | "20030101381" | "20030159070" | "20030217287" | "20040024864" | "20040024864" | "20040030914" | "20040034794" | "20040064515" | "20040064736" | "20040080529" | "20040143763" | "20050005160" | "20050268112" | "20060074896" | "5623600" | "5920696" | "5951698" | "6069628" | "6073241" | "6092194" | "6154844" | "6167520" | "6310630" | "6397264" | "6405316" | "6460060" | "6480962" | "6535931" | "6611878" | "6633835" | "6667751" | "6701441" | "6772345" |	US-PGPUB; USPAT; FPRS; EPO; JPO; DERWENT	OR	ON	2010/02/12 16:18

		"6804780" | "6813711" | "6829654" | "6910134" | "6965968" | "7058822" | "7107617").PN.				
S12	3	(US-20040024864-$ or US-20050268112-$ or US-20040225877-$).did.	US-PGPUB	OR	ON	2010/02/12 16:19
S13	2	S12 and (monitor$3 or identify$3) same (source or origin$4) same2 (record or history)	US-PGPUB; USPAT; FPRS; EPO; JPO; DERWENT	OR	ON	2010/02/12 16:24
S14	2	S12 and (monitor$3 or identify$3) same (source or origin$4) same (record or history)	US-PGPUB; USPAT; FPRS; EPO; JPO; DERWENT	OR	ON	2010/02/12 16:25
S38	8773	726/22-25,13;713/187-188,193-194.ccls.	US-PGPUB; USPAT; FPRS; EPO; JPO; DERWENT	OR	ON	2010/02/12 19:28
S39	5	S38 and (identity with source) and (pestware maleware spamware adware scumware)	US-PGPUB; USPAT; FPRS; EPO; JPO; DERWENT	OR	ON	2010/02/12 19:29
S40	5	S39 and (@ad<"20060420" or rlad <"20060420")	US-PGPUB; USPAT; FPRS; EPO; JPO; DERWENT	OR	ON	2010/02/12 19:29
S42	13	boney near3 matthew.inv.	US-PGPUB; USPAT; FPRS; EPO; JPO; DERWENT	OR	ON	2010/11/06 11:24
S52	1	S42 and pestware with identif$4 near6 object same identif$4 adj origin	US-PGPUB; USPAT; FPRS; EPO; JPO; DERWENT	OR	ON	2010/11/06 11:29
S63	3	(US-20040024864-$ or US-20050268112-$ or US-20040225877-$).did.	US-PGPUB	OR	ON	2010/11/06 11:30
S75	1	S63 and (history same source)	US-PGPUB; USPAT; FPRS; EPO; JPO; DERWENT	OR	ON	2010/11/06 11:30
S99	22	(source or origin$5) with pestware same2 (indication or indicia or reference or map$4 or link $3)	US-PGPUB; USPAT; FPRS; EPO; JPO; DERWENT	OR	ON	2010/11/06 11:43

EAST Search History (Interference)

<This search history is empty>

11/6/2010 1:37:14 PM
C:\Documents and Settings\mrahman4\My Documents\EAST\Workspaces\71_ackward researching existing pestware_11408146\71_ackward researching existing pestware_11408146.wsp

IN THE UNITED STATES PATENT AND TRADEMARK OFFICE

In Re Application of:	BONEY, Matthew L.	Confirmation No.:	8009
Serial No.:	11/408,146	Group Art Unit:	2438
Filed:	April 20, 2006	Examiner:	RAHMAN, Mahfuzur

FOR: **BACKWARDS RESEARCHING ACTIVITY INDICATIVE OF PESTWARE**

Mail Stop Amendment
Commissioner for Patents
P.O. Box 1450
Alexandria, VA 22313-1450

AMENDMENT/RESPONSE TO OFFICE ACTION

In response to the Official Action dated February 25, 2010, please amend the above-identified patent application in the following manner:

Amendments to the Specification begin on page 2 of this paper.

Amendments to the Claims are reflected on the listing of the claims that begins on page 3 of this paper.

Remarks/Arguments begin on page 9 of this paper.

IN THE SPECIFICATION:

Please replace paragraph no. [0001] with the following paragraph. The amendments to paragraph no. [0001] are indicated by strikethrough and underlining.

[0001] The present application is related to commonly owned and assigned Application No. 10/956,573, ~~Attorney Docket No. WEBR-003/00US~~now U.S. Patent No. 7,480,683, entitled *System and Method For Heuristic Analysis to Identify Pestware*; Application No. 10/956,574, ~~Attorney Docket No. WEBR-005/00US~~now U.S. Patent No. 7,533,131, entitled *System and Method for Pestware Detection and Removal*; Application No. ~~11/237,291~~10/956,818, ~~Attorney Docket No. WEBR-006/00US,~~ entitled *System and Method for Locating Malware and Generating Malware Definitions*; Application No. 11/257,609, ~~Attorney Docket No. WEBR-015/00US,~~ entitled *System and Method for Kernel-Level Pestware Management*; Application No. 11/237,291, ~~Attorney Docket No. WEBR-020/00US,~~ entitled *Client Side Exploit Tracking*; Application No. ~~[unassigned]~~11/408,215, ~~Attorney Docket No. WEBR-043/00US,~~ entitled *Backward Researching Existing Pestware*, filed herewith; and Application No. ~~[unassigned]~~11,408,145, ~~Attorney Docket No. WEBR-045/00US,~~ entitled *Backward Researching Time Stamped Events to Find an Origin of Pestware*, filed herewith, which are incorporated herein by reference.

AMENDMENTS TO THE CLAIMS:

Set forth below in ascending order, with status identifiers, is a complete listing of all claims currently under examination. Changes to any amended claims are indicated by strikethrough and underlining. This listing also reflects any cancellation and/or addition of claims.

1. (currently amended) A method for identifying an origin of activity on a computer that is indicative of pestware comprising:

monitoring the computer for activity that is indicative of pestware;

identifying, based upon the activity, an object residing on the computer that is a suspected pestware object; and

accessing at least a portion of a recorded history of externally networked sources that the computer received files from so as to identify a reference to an identity of a particular externally networked source that the suspected pestware object originated from.

2. (currently amended) The method of claim 1, including:

reporting the identity of the particular externally networked source to a pestware research entity so as to enable the pestware research entity to research whether the particular externally networked source is a source of pestware.

3. (currently amended) The method of claim 1, wherein the particular externally networked source is identified by an identifier selected from the group consisting of an I.P. address[[,]] and a URL~~, an email client and a program~~.

4. (original) The method of claim 3, wherein the identifying includes accessing an activity log that includes information that relates the activity to the suspected pestware object.

5. (original) The method of claim 1, wherein the monitoring includes monitoring the computer for activity with a kernel-mode driver.

6. (original) The method of claim 5, wherein the monitoring includes heuristically analyzing the activity so as to arrive at a determination that the activity is indicative of pestware.

7. (original) The method of claim 1, wherein the recorded history resides in a browser cache, which includes information about files downloaded to the computer and a source of each of the files.

8. (original) The method of claim 1, wherein the recorded history resides in at least one log selected from the group consisting of an activity log, a browser history, browser cache, browser settings, operating system settings, an event log, a debugging log, a firewall log, file information and monitoring software logs.

9. (currently amended) A system for identifying a source of activity on a computer that is indicative of pestware including:

a heuristics module configured to identify activity on the computer that is indicative of pestware residing on the computer; and

a research portion configured to access a first set of recorded information on the computer that relates the activity to at least one file residing an the computer, and wherein the research portion is configured to access a second set of recorded information on the computer that relates the at least one file to an externally networked source from which the file was received; and

a reporting portion configured to generate a report that identifies the externally networked source of the file.

10. (original) The system of claim 9, including:

an activity monitor configured to monitor API calls and to store a history of at least a portion of the API calls in an activity log.

11. (original) The system of claim 10, wherein activity monitor is configured to store an identity of each process that made each of the API calls in the stored history, and wherein the activity monitor is configured to store an identity of each file that corresponds to each the processes that made the API calls in the stored history so as to create a relation between each API call and at least one file.

12. (original) The system of claim 10, wherein the heuristics module is configured to receive information about the API calls from the activity monitor and determine whether the API calls are indicative of pestware.

13. (original) The system of claim 10, wherein the activity monitor includes a kernel-mode driver adapted to intercept the API calls.

14. (original) The system of claim 9, wherein the first set of recorded information and the second set of recorded information reside in the same log file on a file storage device of the computer.

15. (currently amended) The system of claim 9, wherein the externally networked source is identified by an identifier selected from the group consisting of an I.P. address[[,]] and a URL~~, an email client and a program name~~.

16. (original) The system of claim 9, wherein the recorded history resides in at least one log selected from the group consisting of an activity log, a browser history, browser cache, browser settings, operating system settings, an event log, a debugging log, a firewall log, file information and monitoring software logs.

17. (currently amended) A computer-readable medium including processor-executable instructions for identifying an origin of activity on a computer that is indicative of pestware, the instructions including instructions for:

monitoring the computer for activity that is indicative of pestware;

identifying, based upon the activity, an object residing on the computer that is a suspected pestware object; and

accessing at least a portion of a recorded history of externally networked sources that the computer received files from so as to identify a reference to an identity of a particular externally networked source that the suspected pestware object originated from.

18. (currently amended) The computer-readable medium of claim 17, including instructions for:

reporting the identity of the particular web site to a pestware research entity so as to enable the pestware research entity to research whether the particular externally networked source is a source of pestware.

19. (currently amended) The computer-readable medium of claim 17, wherein the particular externally networked source is identified by an identifier selected from the group consisting of an I.P. address[[,]] and a URL~~, an email client and a program~~.

20. (original) The computer-readable medium of claim 17, wherein the instructions for monitoring include instructions for monitoring the computer for activity with a kernel-mode driver.

21. (original) The computer-readable medium of claim 20, wherein the instructions for monitoring include instructions for heuristically analyzing the activity so as to arrive at a determination that the activity is indicative of pestware.

22. (original) The computer-readable medium of claim 17, wherein the recorded history resides in at least one log selected from the group consisting of an activity log, a browser history, browser cache, browser settings, operating system settings, an event log, a debugging log, a firewall log, file information and monitoring software logs.

REMARKS

Claims 1-3, 9, 15, and 17-19 have been currently amended. No new claims have been added. Claims 1-22 thus remain pending in the application

Claim Rejections

The Office Action rejects claims 1-6, 8, 10-16, and 19-23 under 35 U.S.C. § 103(a) as being unpatentable over Wang et al. (U.S. 2005/0268112, hereinafter "Wang") in view of Porras et al. (U.S. 2004/0024864, hereinafter "Porras").

Applicant believes that independent claims 1, 9, and 17, as currently amended, recite limitations neither taught nor suggested by Porras or Wang, whether those references are considered separately or in combination.

Claim 1. Currently amended independent claim 1 recites "accessing at least a portion of a recorded history of externally networked sources that the computer received files from so as to identify a reference to an identity of a particular externally networked source that the suspected pestware object originated from." Porras, however, pertains to "host-based intrusion detection systems." Porras, Para. 001. Such host-based intrusion detection systems involve analyzing audit records which "include information about system calls (operating system routines executed on the host computer), and may include some information about sessions (the communications between a user or process and the host computer during a connection)." Porras, Para. 0002. More specifically, Porras relates to identifying "a user, process, or application" of a host computer and taking "action against *only* those sessions and applications that are related to an attack" on the host computer. Porras, Para. 0005 (emphasis added). In other words, Porras is expressly limited to finding and taking action, on the host computer, against only the host

computer session that attacks the host computer. The universe of activity in Porras is limited to the confines of the host computer and its user sessions and process sessions.

Currently amended claim 1, on the other hand, recites "to identify . . . a reference to an identity of a particular *externally networked source* that the suspected pestware object *originated* from" (emphasis added). Porras is interested not in an externally networked source suspected of originating an attack (e.g., an Internet URL or Web site from which the pestware was downloaded), but in the internal network's user or process session through which the attack is made (i.e., the local "victim" of the attack). Porras, Wang, and Huang, whether separately or in combination, do not teach or suggest the above-quoted limitation. Applicant notes that the current amendments to claim 1 are amply supported at, e.g., Paragraphs 0016 and 0046 of the specification as originally filed. No new matter has been introduced by way of the current amendments.

Wang and Porras, whether taken separately or in combination, fail to teach or suggest each and every limitation recited in currently amended claim 1. As a result, the cited references cannot render claim 1 obvious under § 103(a), and Applicant believes claim 1 to be allowable. Each of dependent claims 2-8 is thus also allowable at least by virtue of its depending from allowable claim 1. Withdrawal of the rejection, under § 103(a), of claims 1-8 is respectfully requested.

Claim 9. Currently amended independent claim 9 recites "a research portion configured to access a first set of recorded information on the computer that relates the activity to at least one file residing an the computer, and wherein the research portion is configured to access a second set of recorded information on the computer that relates the at least one file to an externally networked source from which the file was received; and a reporting portion

configured to generate a report that identifies the externally networked source of the file." Similar to the argument above in connection with claim 1, Porras is not interested in the actual source that is suspected of originating an attack. It is interested only in activity in the internal network, specifically the user sessions or process sessions within a host computer, and limiting any action taken to those sessions. Porras is silent regarding the actual source suspected of originating potential pestware activity. Applicant notes that the current amendments to claim 9 are amply supported at, e.g., Paragraphs 0016 and 0046 of the specification as originally filed. No new matter has been introduced by way of the current amendments.

Wang and Porras, whether taken separately or in combination, fail to teach or suggest each and every limitation recited in currently amended claim 9. As a result, the cited references cannot render claim 9 obvious under § 103(a), and Applicant believes claim 9 to be allowable. Each of dependent claims 10-16 is thus also allowable at least by virtue of its depending from allowable claim 9. Withdrawal of the rejection, under § 103(a), of claims 9-16 is respectfully requested.

Claim 17. Currently amended independent claim recites "accessing at least a portion of a recorded history of externally networked sources that the computer received files from so as to identify a reference to an identity of a particular externally networked source that the suspected pestware object originated from." Similar arguments made in connection with currently amended independent claim 1 apply to claim 17. Applicant notes that the current amendments to claim 17 are amply supported at, e.g., Paragraphs 0016 and 0046 of the specification as originally filed. No new matter has been introduced by way of the current amendments.

Wang and Porras, whether taken separately or in combination, fail to teach or suggest each and every limitation recited in currently amended claim 17. As a result, the cited references

cannot render claim 9 obvious under § 103(a), and Applicant believes claim 17 to be allowable. Each of dependent claims 18-22 is thus also allowable at least by virtue of its depending from allowable claim 17. Withdrawal of the rejection, under § 103(a), of claims 17-22 is respectfully requested.

CONCLUSION

In view of the foregoing, Applicant respectfully submits that no further impediments exist to the allowance of this application and, therefore, requests an indication of allowability. However, the Examiner is requested to call the undersigned if any questions or comments arise.

The Director is hereby authorized to charge any appropriate fees under 37 C.F.R. §§1.16, 1.17, and 1.21 that may be required by this paper, and to credit any overpayment, to Deposit Account No. 50-1283.

COOLEY LLP
ATTN: Patent Group
777 6th Street NW, Suite 1100
Washington, DC 20001

Tel: (720) 566-4044
Fax: (202) 842-7899

Respectfully submitted,
COOLEY LLP

By: Thomas M. Croft

Thomas M. Croft
Reg. No. 44,051

Electronic Patent Application Fee Transmittal

Application Number:	11408146
Filing Date:	20-Apr-2006
Title of Invention:	Backwards researching activity indicative of pestware
First Named Inventor/Applicant Name:	Matthew L. Boney
Filer:	Thomas M. Croft/Sherry Bitler
Attorney Docket Number:	WEBR-044/00US 303666-2049

Filed as Large Entity

Utility under 35 USC 111(a) Filing Fees

Description	Fee Code	Quantity	Amount	Sub-Total in USD($)
Basic Filing:				
Pages:				
Claims:				
Miscellaneous-Filing:				
Petition:				
Patent-Appeals-and-Interference:				
Post-Allowance-and-Post-Issuance:				
Extension-of-Time:				
Extension - 3 months with $0 paid	1253	1	1110	1110

Description	Fee Code	Quantity	Amount	Sub-Total in USD($)
Miscellaneous:				
			Total in USD ($)	**1110**

Electronic Acknowledgement Receipt

EFS ID:	8262239
Application Number:	11408146
International Application Number:	
Confirmation Number:	8009
Title of Invention:	Backwards researching activity indicative of pestware
First Named Inventor/Applicant Name:	Matthew L. Boney
Customer Number:	22903
Filer:	Thomas M. Croft/Sherry Bitler
Filer Authorized By:	Thomas M. Croft
Attorney Docket Number:	WEBR-044/00US 303666-2049
Receipt Date:	20-AUG-2010
Filing Date:	20-APR-2006
Time Stamp:	20:05:06
Application Type:	Utility under 35 USC 111(a)

Payment information:

Submitted with Payment	yes
Payment Type	Deposit Account
Payment was successfully received in RAM	$1110
RAM confirmation Number	5242
Deposit Account	501283
Authorized User	

The Director of the USPTO is hereby authorized to charge indicated fees and credit any overpayment as follows:

Charge any Additional Fees required under 37 C.F.R. Section 1.21 (Miscellaneous fees and charges)

File Listing:

Document Number	Document Description	File Name	File Size(Bytes)/ Message Digest	Multi Part /.zip	Pages (if appl.)
1	Applicant Arguments/Remarks Made in an Amendment	WEBR04400US-2010-08-20-roa.pdf	442713 1007238e236df4ebdd0be37cc8b48de88dee8a9f	no	12
Warnings:					
Information:					
2	Fee Worksheet (PTO-875)	fee-info.pdf	30182 ffdbca1a45c3441af79571b4a32b04e5e9ee2991	no	2
Warnings:					
Information:					
			Total Files Size (in bytes):	472895	

This Acknowledgement Receipt evidences receipt on the noted date by the USPTO of the indicated documents, characterized by the applicant, and including page counts, where applicable. It serves as evidence of receipt similar to a Post Card, as described in MPEP 503.

<u>New Applications Under 35 U.S.C. 111</u>
If a new application is being filed and the application includes the necessary components for a filing date (see 37 CFR 1.53(b)-(d) and MPEP 506), a Filing Receipt (37 CFR 1.54) will be issued in due course and the date shown on this Acknowledgement Receipt will establish the filing date of the application.

<u>National Stage of an International Application under 35 U.S.C. 371</u>
If a timely submission to enter the national stage of an international application is compliant with the conditions of 35 U.S.C. 371 and other applicable requirements a Form PCT/DO/EO/903 indicating acceptance of the application as a national stage submission under 35 U.S.C. 371 will be issued in addition to the Filing Receipt, in due course.

<u>New International Application Filed with the USPTO as a Receiving Office</u>
If a new international application is being filed and the international application includes the necessary components for an international filing date (see PCT Article 11 and MPEP 1810), a Notification of the International Application Number and of the International Filing Date (Form PCT/RO/105) will be issued in due course, subject to prescriptions concerning national security, and the date shown on this Acknowledgement Receipt will establish the international filing date of the application.

PTO/SB/06 (07-06)
Approved for use through 1/31/2007. OMB 0651-0032
U.S. Patent and Trademark Office; U.S. DEPARTMENT OF COMMERCE
Under the Paperwork Reduction Act of 1995, no persons are required to respond to a collection of information unless it displays a valid OMB control number.

PATENT APPLICATION FEE DETERMINATION RECORD

Substitute for Form PTO-875

Application or Docket Number	Filing Date	☐ To be Mailed
11/408,146	04/20/2006	

APPLICATION AS FILED – PART I

FOR	(Column 1) NUMBER FILED	(Column 2) NUMBER EXTRA	SMALL ENTITY ☐ RATE ($)	SMALL ENTITY FEE ($)	OR	OTHER THAN SMALL ENTITY RATE ($)	OTHER THAN SMALL ENTITY FEE ($)
☐ BASIC FEE (37 CFR 1.16(a), (b), or (c))	N/A	N/A	N/A			N/A	
☐ SEARCH FEE (37 CFR 1.16(k), (i), or (m))	N/A	N/A	N/A			N/A	
☐ EXAMINATION FEE (37 CFR 1.16(o), (p), or (q))	N/A	N/A	N/A			N/A	
TOTAL CLAIMS (37 CFR 1.16(i))	minus 20 =	*	X $ =		OR	X $ =	
INDEPENDENT CLAIMS (37 CFR 1.16(h))	minus 3 =	*	X $ =			X $ =	
☐ APPLICATION SIZE FEE (37 CFR 1.16(s))	If the specification and drawings exceed 100 sheets of paper, the application size fee due is $250 ($125 for small entity) for each additional 50 sheets or fraction thereof. See 35 U.S.C. 41(a)(1)(G) and 37 CFR 1.16(s).						
☐ MULTIPLE DEPENDENT CLAIM PRESENT (37 CFR 1.16(j))							
* If the difference in column 1 is less than zero, enter "0" in column 2.			TOTAL			TOTAL	

APPLICATION AS AMENDED – PART II

AMENDMENT 08/20/2010	(Column 1) CLAIMS REMAINING AFTER AMENDMENT		(Column 2) HIGHEST NUMBER PREVIOUSLY PAID FOR	(Column 3) PRESENT EXTRA	SMALL ENTITY RATE ($)	SMALL ENTITY ADDITIONAL FEE ($)	OR	OTHER THAN SMALL ENTITY RATE ($)	OTHER THAN SMALL ENTITY ADDITIONAL FEE ($)
Total (37 CFR 1.16(i))	* 22	Minus	** 22	= 0	X $ =		OR	X $52=	0
Independent (37 CFR 1.16(h))	* 3	Minus	***3	= 0	X $ =		OR	X $220=	0
☐ Application Size Fee (37 CFR 1.16(s))									
☐ FIRST PRESENTATION OF MULTIPLE DEPENDENT CLAIM (37 CFR 1.16(j))							OR		
					TOTAL ADD'L FEE		OR	TOTAL ADD'L FEE	0

AMENDMENT	(Column 1) CLAIMS REMAINING AFTER AMENDMENT		(Column 2) HIGHEST NUMBER PREVIOUSLY PAID FOR	(Column 3) PRESENT EXTRA	RATE ($)	ADDITIONAL FEE ($)	OR	RATE ($)	ADDITIONAL FEE ($)
Total (37 CFR 1.16(i))	*	Minus	**	=	X $ =		OR	X $ =	
Independent (37 CFR 1.16(h))	*	Minus	***	=	X $ =		OR	X $ =	
☐ Application Size Fee (37 CFR 1.16(s))									
☐ FIRST PRESENTATION OF MULTIPLE DEPENDENT CLAIM (37 CFR 1.16(j))							OR		
					TOTAL ADD'L FEE		OR	TOTAL ADD'L FEE	

* If the entry in column 1 is less than the entry in column 2, write "0" in column 3.
** If the "Highest Number Previously Paid For" IN THIS SPACE is less than 20, enter "20".
*** If the "Highest Number Previously Paid For" IN THIS SPACE is less than 3, enter "3".
The "Highest Number Previously Paid For" (Total or Independent) is the highest number found in the appropriate box in column 1.

Legal Instrument Examiner:
/Trina Steptoe/

This collection of information is required by 37 CFR 1.16. The information is required to obtain or retain a benefit by the public which is to file (and by the USPTO to process) an application. Confidentiality is governed by 35 U.S.C. 122 and 37 CFR 1.14. This collection is estimated to take 12 minutes to complete, including gathering, preparing, and submitting the completed application form to the USPTO. Time will vary depending upon the individual case. Any comments on the amount of time you require to complete this form and/or suggestions for reducing this burden, should be sent to the Chief Information Officer, U.S. Patent and Trademark Office, U.S. Department of Commerce, P.O. Box 1450, Alexandria, VA 22313-1450. DO NOT SEND FEES OR COMPLETED FORMS TO THIS ADDRESS. **SEND TO: Commissioner for Patents, P.O. Box 1450, Alexandria, VA 22313-1450.**
If you need assistance in completing the form, call 1-800-PTO-9199 and select option 2.

UNITED STATES PATENT AND TRADEMARK OFFICE

UNITED STATES DEPARTMENT OF COMMERCE
United States Patent and Trademark Office
Address: COMMISSIONER FOR PATENTS
P.O. Box 1450
Alexandria, Virginia 22313-1450
www.uspto.gov

APPLICATION NO.	FILING DATE	FIRST NAMED INVENTOR	ATTORNEY DOCKET NO.	CONFIRMATION NO.
11/408,146	04/20/2006	Matthew L. Boney	WEBR-044/00US 303666-2049	8009

22903 7590 02/25/2010
COOLEY GODWARD KRONISH LLP
ATTN: PATENT GROUP
Suite 1100
777 - 6th Street, NW
WASHINGTON, DC 20001

EXAMINER
RAHMAN, MAHFUZUR

ART UNIT	PAPER NUMBER
2438	

MAIL DATE	DELIVERY MODE
02/25/2010	PAPER

Please find below and/or attached an Office communication concerning this application or proceeding.

The time period for reply, if any, is set in the attached communication.

Office Action Summary	Application No.	Applicant(s)	
	11/408,146	BONEY, MATTHEW L.	
	Examiner	Art Unit	
	MAHFUZUR RAHMAN	2438	

-- The MAILING DATE of this communication appears on the cover sheet with the correspondence address --

Period for Reply

A SHORTENED STATUTORY PERIOD FOR REPLY IS SET TO EXPIRE 3 MONTH(S) OR THIRTY (30) DAYS, WHICHEVER IS LONGER, FROM THE MAILING DATE OF THIS COMMUNICATION.

- Extensions of time may be available under the provisions of 37 CFR 1.136(a). In no event, however, may a reply be timely filed after SIX (6) MONTHS from the mailing date of this communication.
- If NO period for reply is specified above, the maximum statutory period will apply and will expire SIX (6) MONTHS from the mailing date of this communication.
- Failure to reply within the set or extended period for reply will, by statute, cause the application to become ABANDONED (35 U.S.C. § 133). Any reply received by the Office later than three months after the mailing date of this communication, even if timely filed, may reduce any earned patent term adjustment. See 37 CFR 1.704(b).

Status

1)☒ Responsive to communication(s) filed on 20 April 2006.

2a)☐ This action is **FINAL**. 2b)☒ This action is non-final.

3)☐ Since this application is in condition for allowance except for formal matters, prosecution as to the merits is closed in accordance with the practice under *Ex parte Quayle*, 1935 C.D. 11, 453 O.G. 213.

Disposition of Claims

4)☒ Claim(s) 1-22 is/are pending in the application.

4a) Of the above claim(s) _____ is/are withdrawn from consideration.

5)☐ Claim(s) _____ is/are allowed.

6)☒ Claim(s) 1-22 is/are rejected.

7)☐ Claim(s) _____ is/are objected to.

8)☐ Claim(s) _____ are subject to restriction and/or election requirement.

Application Papers

9)☐ The specification is objected to by the Examiner.

10)☒ The drawing(s) filed on 20 April 2006 is/are: a)☒ accepted or b)☐ objected to by the Examiner.

Applicant may not request that any objection to the drawing(s) be held in abeyance. See 37 CFR 1.85(a).

Replacement drawing sheet(s) including the correction is required if the drawing(s) is objected to. See 37 CFR 1.121(d).

11)☐ The oath or declaration is objected to by the Examiner. Note the attached Office Action or form PTO-152.

Priority under 35 U.S.C. § 119

12)☐ Acknowledgment is made of a claim for foreign priority under 35 U.S.C. § 119(a)-(d) or (f).

a)☐ All b)☐ Some * c)☐ None of:

1.☐ Certified copies of the priority documents have been received.

2.☐ Certified copies of the priority documents have been received in Application No. _____.

3.☐ Copies of the certified copies of the priority documents have been received in this National Stage application from the International Bureau (PCT Rule 17.2(a)).

* See the attached detailed Office action for a list of the certified copies not received.

Attachment(s)

1) ☒ Notice of References Cited (PTO-892)

2) ☐ Notice of Draftsperson's Patent Drawing Review (PTO-948)

3) ☒ Information Disclosure Statement(s) (PTO/SB/08) Paper No(s)/Mail Date 4/18/2007,11/20/2007,5/22/2008 .

4) ☐ Interview Summary (PTO-413) Paper No(s)/Mail Date. _____ .

5) ☐ Notice of Informal Patent Application

6) ☐ Other: _____.

DETAILED ACTION

Claims 1-22 are examined and are pending.

Information Disclosure Statement

The information disclosure statement (IDS) submitted on 4/18/2007, 11/20/2007, and 5/22/2008 have been considered. The submission is in compliance with the provisions of 37 CFR 1.97. Form PTO-1449 is signed and attached hereto.

Oath/Declaration

The Oath/Declaration filed on 6/15/2006 is accepted by the examiner.

Drawings

The drawings filed on 4/20/2006 are accepted by the examiner.

Priority

The application is filed on 4/20/2006 and is continuation of PCT/US07/67076. However, the effective filing date for the subject matter defined in the pending claims in this application is 4/20/2006.

Claim Rejections - 35 USC § 103

1. The following is a quotation of 35 U.S.C. 103(a) which forms the basis for all obviousness rejections set forth in this Office action:

> (a) A patent may not be obtained though the invention is not identically disclosed or described as set forth in section 102 of this title, if the differences between the subject matter sought to be patented and the prior art are such that the subject matter as a whole would have been obvious at the time the invention was made to a person having ordinary skill in the art to which said subject matter pertains. Patentability shall not be negatived by the manner in which the invention was made.

2. The factual inquiries set forth in *Graham* **v.** *John Deere Co.*, 383 U.S. 1, 148 USPQ 459 (1966), that are applied for establishing a background for determining obviousness under 35 U.S.C. 103(a) are summarized as follows:

1. Determining the scope and contents of the prior art.
2. Ascertaining the differences between the prior art and the claims at issue.
3. Resolving the level of ordinary skill in the pertinent art.
4. Considering objective evidence present in the application indicating obviousness or nonobviousness.

3. Claims 1-22 are rejected under 35 U.S.C. 103(a) as being unpatentable over Wang et al. (US 2005/0268112 A1, hereinafter, Wang) in view of Porras et al. (US 2004/0024864 A1, hereinafter, Porras).

Regarding claim 1, Wang discloses a method for identifying an origin of activity on a computer that is indicative of pestware comprising:

monitoring the computer for activity that is indicative of pestware (Paragraph 0042: monitoring activity on a given machine infected with spyware using known-good and known-bad signatures);

identifying, based upon the activity, an object residing on the computer that is a suspected pestware object (Paragraphs 0009-0010: monitoring ASEP-hook related activity and identifying potential unwanted software such as new or unknown spyware); and

accessing at least a portion of a recorded history of sources that the computer received files from so as to identify [a reference] to an identity of a particular source that the suspected pestware object originated from (Paragraph 0050: Although web browser history may already record the URL and timestamp for every Web site visited, it is typically a global history for all instances of the browser. By correlating the URL Trace Log entries with entries from a bundle tracing log, the source URL of Web-based installation is identified).

Wang does not explicitly disclose but Porras from the same or similar fields of endeavor teaches a reference to an identity of a particular source that the suspected pestware object originated from (Paragraph 0015: source of an potential attack is identified using the IP address and associated session identifier in the audit records).

Therefore, it would have been obvious to one of ordinary skill in the art at the time of the invention, to use a reference to identify the source of a program that is responsible for potential attack as taught by Porras in the teachings of Wang for the advantage of reliably identifying the source and activities of user and process sessions, and thus make it possible to take action against only those sessions and applications that are related to an attack (Paragraph 0005).

Regarding claim 2, the combination of Wang and Porras discloses the method of claim 1, including:

reporting the identity of the particular source to a pestware research entity so as to enable the pestware research entity to research whether the particular source is a source of pestware (Paragraph 0041: An event log is maintained to store details of software installations, including timestamp and process identification number of the installing process along with a Gatekeeper Browser Helper Object (BHO) for monitoring activity related to potential spyware).

Regarding claim 3, the combination of Wang and Porras discloses the method of claim 1, wherein the source is identified by an identifier selected from the group consisting of an I.P. address, a URL, an email client and a program (Paragraph 0050: the source URL is identified using the URLs recorded by Browser Helper Object (BHO)).

Regarding claim 4, the combination of Wang and Porras discloses the method of claim 3, wherein the identifying includes accessing an activity log that includes information that relates the activity to the suspected pestware object (Paragraph 0039: Gatekeeper Browser Helper Object (BHO) records URLs in a uniform resource locator (URL) trace log, which stores the history of the visited URLs) .

Regarding claim 5, the combination of Wang and Porras discloses the method

of claim 1, wherein the monitoring includes monitoring the computer for activity with a kernel-mode driver (Paragraph 0062: Loadable Kernel Modules (LKMs) are placed the directory libraries).

Regarding claim 6, the combination of Wang and Porras discloses the method of claim 5, wherein the monitoring includes heuristically analyzing the activity so as to arrive at a determination that the activity is indicative of pestware (Paragraph 0053: analyzing Registry and file traces collected from any machine to discover new ASEPs that can potentially be hooked by future spyware) .

Regarding claim 7, the combination of Wang and Porras discloses the method of claim 1, wherein the recorded history resides in a browser cache, which includes information about files downloaded to the computer and a source of each of the files (Paragraph 0041: an event log and browser history of visited web pages is recorded).

Regarding claim 8, the combination of Wang and Porras discloses the method of claim 1, wherein the recorded history resides in at least one log selected from the group consisting of an activity log, a browser history, browser cache, browser settings, operating system settings, an event log, a debugging log, a firewall log, file information and monitoring software logs (Paragraph 0041: an event log and browser history of visited web pages is recorded).

Regarding claim 9, Wang discloses a system for identifying a source of activity on a computer that is indicative of pestware including:

a heuristics module configured to identify activity on the computer that is indicative of pestware residing on the computer (Paragraph 0013: computer-executable instructions is provided for facilitating the identifying of potential unwanted software); and

a research portion configured to access a first set of recorded information on the computer that relates the activity to at least one file residing an the computer (Paragraph 0053: analyzing Registry and file traces collected from any machine to discover new ASEPs that can potentially be hooked by future spyware; Paragraph 0054: analyze the System Restore file change log), and

wherein the research portion is configured to access a second set of recorded information on the computer that [relates the at least one file to a source] from which the file was received (Paragraph 0050: By correlating the URL Trace Log entries with entries from a bundle tracing log, the source URL of Web-based installation is identified).; and

a reporting portion configured to generate a report that identifies the source of the file (Paragraph 0057: a report is being generated by "auto-start trace log" component that contains all ASEP (Auto-Start Extensibility Points) hooks made by the spyware).

Wang does not explicitly disclose but Porras from the same or similar fields of endeavor teaches to access a second set of recorded information on the computer that

relates the at least one file to a source (Paragraph 0015: source of an potential attack is identified using the IP address and associated session identifier in the audit records).

Therefore, it would have been obvious to one of ordinary skill in the art at the time of the invention, to access a second set of recorded information on the computer that relates the at least one file to a source as taught by Porras in the teachings of Wang for the advantage of reliably identifying the source and activities of user and process sessions, and thus make it possible to take action against only those sessions and applications that are related to an attack (Paragraph 0005).

Regarding claim 10, the combination of Wang and Porras discloses the system of claim 9, including: an activity monitor configured to monitor API calls and to store a history of at least a portion of the API calls in an activity log (Paragraph 0039: API calls are gathered by software tool called Gatekeeper).

Regarding claim 11, the combination of Wang and Porras discloses the system of claim 10, wherein activity monitor is configured to store an identity of each process that made each of the API calls in the stored history (Paragraph 0039: Gatekeeper Browser Helper Object (BHO) records URLs in a uniform resource locator (URL) trace log, which stores the history of the visited URLs), and wherein the activity monitor is configured to store an identity of each file that corresponds to each the processes that made the API calls in the stored history so as to create a relation between each API call and at least one file (Paragraph 0039: Gatekeeper engine communicates with the

operating system through APIs and gather information from data files accessed via the file system).

Regarding claim 12, the combination of Wang and Porras discloses the system of claim 10, wherein the heuristics module is configured to receive information about the API calls from the activity monitor and determine whether the API calls are indicative of pestware (Paragraph 0053: analyzing Registry and file traces collected from any machine to discover new ASEPs that can potentially be hooked by spyware).

Regarding claim 13, the combination of Wang and Porras discloses the system of claim 10, wherein the activity monitor includes a kernel-mode driver adapted to intercept the API calls (Paragraph 0062: Loadable Kernel Modules (LKMs) are placed the directory libraries).

Regarding claim 14, the combination of Wang and Porras discloses the system of claim 9, wherein the first set of recorded information and the second set of recorded information reside in the same log file on a file storage device of the computer (Paragraph 0041: a Gatekeeper Browser Helper Object (BHO) records (URL) trace log, which stores the URL and timestamp of web pages visited by the browser, along with the process identification number. An event log is also maintained to store details of software installations, including timestamp and process identification number of the installing process).

Regarding claim 15, the combination of Wang and Porras discloses the system of claim 9, wherein the source is identified by an identifier selected from the group consisting of an I.P. address, a URL, an email client and a program name (Paragraph 0050: the source URL is identified using the URLs recorded by Browser Helper Object (BHO)).

.

Regarding claim 16, the combination of Wang and Porras discloses the system of claim 9, wherein the recorded history resides in at least one log selected from the group consisting of an activity log, a browser history, browser cache, browser settings, operating system settings, an event log, a debugging log, a firewall log, file information and monitoring software logs (Paragraph 0041: an event log and browser history of visited web pages is recorded).

Regarding claim 17, Wang discloses a computer-readable medium including processor-executable instructions for identifying an origin of activity on a computer that is indicative of pestware, the instructions including instructions for:

monitoring the computer for activity that is indicative of pestware (Paragraph 0042: monitoring activity on a given machine infected with spyware using known-good and known-bad signatures);

identifying, based upon the activity, an object residing on the computer that is a suspected pestware object (Paragraphs 0009-0010: monitoring ASEP-hook related

activity and identifying potential unwanted software such as new or unknown spyware); and

accessing at least a portion of a recorded history of sources that the computer received files from so as to identify a reference to an identity of a source that the suspected pestware object originated from (Paragraph 0050: Although web browser history may already record the URL and timestamp for every Web site visited, it is typically a global history for all instances of the browser. By correlating the URL Trace Log entries with entries from a bundle tracing log, the source URL of Web-based installation is identified).

Wang does not explicitly disclose but Porras from the same or similar fields of endeavor teaches a reference to an identity of a particular source that the suspected pestware object originated from (Paragraph 0015: source of an potential attack is identified using the IP address and associated session identifier in the audit records).

Therefore, it would have been obvious to one of ordinary skill in the art at the time of the invention, to use a reference to identify the source of a program that is responsible for potential attack as taught by Porras in the teachings of Wang for the advantage of reliably identifying the source and activities of user and process sessions, and thus make it possible to take action against only those sessions and applications that are related to an attack (Paragraph 0005).

Regarding claim 18, the combination of Wang and Porras discloses the computer-readable medium of claim 17, including instructions for: reporting the identity

of the particular web site to a pestware research entity so as to enable the pestware research entity to research whether the particular source is a source of pestware (Paragraph 0041: An event log is maintained to store details of software installations, including timestamp and process identification number of the installing process along with a Gatekeeper Browser Helper Object (BHO) for monitoring activity related to potential spyware).

Regarding claim 19, the combination of Wang and Porras discloses the computer-readable medium of claim 17, wherein the source is identified by an identifier selected from the group consisting of an I.P. address, a URL, ,an email client and a program (Paragraph 0050: the source URL is identified using the URLs recorded by Browser Helper Object (BHO)).

Regarding claim 20, the combination of Wang and Porras discloses the computer-readable medium Of claim 17, wherein the instructions for monitoring include instructions for monitoring the computer for activity with a kernel- mode driver (Paragraph 0062: Loadable Kernel Modules (LKMs) are placed the directory libraries).

Regarding claim 21, the combination of Wang and Porras discloses the computer-readable medium of claim 20, wherein the instructions for monitoring include instructions for heuristically analyzing the activity so as to arrive at a determination that the activity is indicative of pestware (Paragraph 0053: analyzing Registry and file traces

collected from any machine to discover new ASEPs that can potentially be hooked by future spyware).

Regarding claim 22, the combination of Wang and Porras discloses the computer-readable medium of claim 17, wherein the recorded history resides in at least one log selected from the group consisting of an activity log, a browser history, browser cache, browser settings, operating system settings, an event log, a debugging log, a firewall log, file information and monitoring software logs (Paragraph 0041: an event log and browser history of visited web pages is recorded).

Conclusion

4. The prior art made of record and not relied upon is considered pertinent to applicant's disclosure.

- MARC ZUTA (WO009845778A2) discloses ANTIVIRUS SYSTEM AND METHOD.
- Hockey (US 2004/0064515 A1) discloses monitoring electronic mail message digests.

Any inquiry concerning this communication or earlier communications from the examiner should be directed to MAHFUZUR RAHMAN whose telephone number is (571)270-7638. The examiner can normally be reached on Monday thru Friday.

If attempts to reach the examiner by telephone are unsuccessful, the examiner's supervisor, Taghi Arani can be reached on (571)272-3787. The fax phone number for the organization where this application or proceeding is assigned is 571-273-8300.

Information regarding the status of an application may be obtained from the Patent Application Information Retrieval (PAIR) system. Status information for published applications may be obtained from either Private PAIR or Public PAIR. Status information for unpublished applications is available through Private PAIR only. For more information about the PAIR system, see http://pair-direct.uspto.gov. Should you have questions on access to the Private PAIR system, contact the Electronic Business Center (EBC) at 866-217-9197 (toll-free). If you would like assistance from a USPTO Customer Service Representative or access to the automated information system, call 800-786-9199 (IN USA OR CANADA) or 571-272-1000.

/M. R./

Examiner, Art Unit 2438

/Taghi T. Arani/

Supervisory Patent Examiner, Art Unit 2438

Notice of References Cited	Application/Control No. 11/408,146	Applicant(s)/Patent Under Reexamination BONEY, MATTHEW L.	
	Examiner MAHFUZUR RAHMAN	Art Unit 2438	Page 1 of 1

U.S. PATENT DOCUMENTS

*		Document Number Country Code-Number-Kind Code	Date MM-YYYY	Name	Classification
*	A	US-2004/0024864 A1	02-2004	Porras et al.	709/224
*	B	US-2004/0064515 A1	04-2004	Hockey, Alyn	709/206
*	C	US-2004/0225877 A1	11-2004	Huang, Zezhen	713/100
*	D	US-2005/0268112 A1	12-2005	Wang et al.	713/188
	E	US-			
	F	US-			
	G	US-			
	H	US-			
	I	US-			
	J	US-			
	K	US-			
	L	US-			
	M	US-			

FOREIGN PATENT DOCUMENTS

*		Document Number Country Code-Number-Kind Code	Date MM-YYYY	Country	Name	Classification
	N	WO 9845778 A2	10-1998	World Intellect	ZUTA, MARC	G06F 11/00
	O					
	P					
	Q					
	R					
	S					
	T					

NON-PATENT DOCUMENTS

*		Include as applicable: Author, Title Date, Publisher, Edition or Volume, Pertinent Pages)
	U	
	V	
	W	
	X	

*A copy of this reference is not being furnished with this Office action. (See MPEP § 707.05(a).)
Dates in MM-YYYY format are publication dates. Classifications may be US or foreign.

Search Notes	Application/Control No.	Applicant(s)/Patent Under Reexamination
	11408146	BONEY, MATTHEW L.
	Examiner	**Art Unit**
	MAHFUZUR RAHMAN	2438

SEARCHED

Class	Subclass	Date	Examiner
726	22	2/12/2010	MR

SEARCH NOTES

Search Notes	Date	Examiner
East search, search terms used: source, origin$4, monitor$3, indentf$4, detect$3, access$3, record, history, computer, browser, cache, kernel, suspect$2, suspicious, reference, url, link, IP address, event, trace, log, pestware, maleware, spamware, adware, scumware.	2/12/2010	MR
Keyword search of 726/27; 713/164,202;380/279;717/124	2/12/2010	MR
Performed Inventor/Assignee name search	2/12/2010	MR

INTERFERENCE SEARCH

Class	Subclass	Date	Examiner

/MAHFUZUR RAHMAN/ Examiner.Art Unit 2438	

Index of Claims	Application/Control No.	Applicant(s)/Patent Under Reexamination
	11408146	BONEY, MATTHEW L.
	Examiner	**Art Unit**
	MAHFUZUR RAHMAN	2438

✓	Rejected	-	Cancelled	N	Non-Elected	A	Appeal
=	Allowed	÷	Restricted	I	Interference	O	Objected

☐ Claims renumbered in the same order as presented by applicant ☐ CPA ☐ T.D. ☐ R.1.47

CLAIM		DATE								
Final	Original	02/12/2010								
	1	✓								
	2	✓								
	3	✓								
	4	✓								
	5	✓								
	6	✓								
	7	✓								
	8	✓								
	9	✓								
	10	✓								
	11	✓								
	12	✓								
	13	✓								
	14	✓								
	15	✓								
	16	✓								
	17	✓								
	18	✓								
	19	✓								
	20	✓								
	21	✓								
	22	✓								

UNITED STATES PATENT AND TRADEMARK OFFICE

UNITED STATES DEPARTMENT OF COMMERCE
United States Patent and Trademark Office
Address: COMMISSIONER FOR PATENTS
P.O. Box 1450
Alexandria, Virginia 22313-1450
www.uspto.gov

BIB DATA SHEET

CONFIRMATION NO. 8009

SERIAL NUMBER	FILING or 371(c) DATE	CLASS	GROUP ART UNIT	ATTORNEY DOCKET NO.
11/408,146	04/20/2006 **RULE**	709	2438	WEBR-044/00US 303666-2049

APPLICANTS
Matthew L. Boney, Longmont, CO;

**** CONTINUING DATA ****************************

**** FOREIGN APPLICATIONS ****************************

**** IF REQUIRED, FOREIGN FILING LICENSE GRANTED ****
05/22/2006

Foreign Priority claimed	☐ Yes ☑ No		STATE OR COUNTRY	SHEETS DRAWINGS	TOTAL CLAIMS	INDEPENDENT CLAIMS
35 USC 119(a-d) conditions met	☐ Yes ☑ No	☐ Met after Allowance	CO	5	22	3
Verified and Acknowledged	/MAHFUZUR RAHMAN/ Examiner's Signature	MR Initials				

ADDRESS

COOLEY GODWARD KRONISH LLP
ATTN: PATENT GROUP
Suite 1100
777 - 6th Street, NW
WASHINGTON, DC 20001
UNITED STATES

TITLE

Backwards researching activity indicative of pestware

FILING FEE RECEIVED		
1230	FEES: Authority has been given in Paper No._____ to charge/credit DEPOSIT ACCOUNT No._____ for following:	☐ All Fees ☐ 1.16 Fees (Filing) ☐ 1.17 Fees (Processing Ext. of time) ☐ 1.18 Fees (Issue) ☐ Other _____ ☐ Credit

EAST Search History

EAST Search History (Prior Art)

Ref #	Hits	Search Query	DBs	Default Operator	Plurals	Time Stamp
S11	89	("20020162015" | "20020162017" | "20020166063" | "20030065943" | "20030074581" | "20030101381" | "20030159070" | "20030217287" | "20040024864" | "20040024864" | "20040030914" | "20040034794" | "20040064515" | "20040064736" | "20040080529" | "20040143763" | "20050005160" | "20050268112" | "20060074896" | "5623600" | "5920696" | "5951698" | "6069628" | "6073241" | "6092194" | "6154844" | "6167520" | "6310630" | "6397264" | "6405316" | "6460060" | "6480962" | "6535931" | "6611878" | "6633835" | "6667751" | "6701441" | "6772345" | "6785732" | "6804780" | "6813711" | "6829654" | "6910134" | "6965968" | "7058822" | "7107617").PN.	US-PGPUB; USPAT; FPRS; EPO; JPO; DERWENT	OR	ON	2010/02/12 16:18
S12	3	(US-20040024864-$ or US-20050268112-$ or US-20040225877-$).did.	US-PGPUB	OR	ON	2010/02/12 16:19
S13	2	S12 and (monitor$3 or identify$3) same (source or origin$4) same2 (record or history)	US-PGPUB; USPAT; FPRS; EPO; JPO; DERWENT	OR	ON	2010/02/12 16:24
S14	2	S12 and (monitor$3 or identify$3) same (source or origin$4) same (record or history)	US-PGPUB; USPAT; FPRS; EPO; JPO; DERWENT	OR	ON	2010/02/12 16:25

S19	2	S12 and (monitor$3)	US-PGPUB; USPAT; FPRS; EPO; JPO; DERWENT	OR	ON	2010/02/12 16:26
S21	1	S12 and monitor$3 and identify$3 same3 (source or origin$4) same (record or history)	US-PGPUB; USPAT; FPRS; EPO; JPO; DERWENT	OR	ON	2010/02/12 16:27
S24	1	S12 and (history same source)	US-PGPUB; USPAT; FPRS; EPO; JPO; DERWENT	OR	ON	2010/02/12 16:43
S27	2	S12 and reference	US-PGPUB; USPAT; FPRS; EPO; JPO; DERWENT	OR	ON	2010/02/12 16:46
S28	2	S12 and (reference or link)	US-PGPUB; USPAT; FPRS; EPO; JPO; DERWENT	OR	ON	2010/02/12 16:47
S29	2	S11 and pestware	US-PGPUB; USPAT; FPRS; EPO; JPO; DERWENT	OR	ON	2010/02/12 16:50
S38	8773	726/22-25,13;713/187-188,193-194.ccls.	US-PGPUB; USPAT; FPRS; EPO; JPO; DERWENT	OR	ON	2010/02/12 19:28
S39	5	S38 and (identity with source) and (pestware maleware spamware adware scumware)	US-PGPUB; USPAT; FPRS; EPO; JPO; DERWENT	OR	ON	2010/02/12 19:29
S40	5	S39 and (@ad<"20060420" or rlad <"20060420")	US-PGPUB; USPAT; FPRS; EPO; JPO; DERWENT	OR	ON	2010/02/12 19:29

EAST Search History (Interference)

<This search history is empty>

2/13/2010 3:13:43 PM
C:\Documents and Settings\mrahman4\My Documents\EAST\Workspaces\71_ackward researching existing pestware_11408146\71_ackward researching existing pestware_11408146.wsp

Please type a plus sign (+) inside this box → +

PTO/SB/08A (07-05)
Approved for use through 07/31/2006. OMB 0651-0031

Substitute for form 1449A/PTO		Complete if Known	
INFORMATION DISCLOSURE STATEMENT BY APPLICANT		Application Number	11/408,146
		Filing Date	04/20/2006
		First Named Inventor	Matthew L. BONEY
		Group Art Unit	2154
(use as many sheets as necessary)		Examiner Name	Not yet assigned
Sheet	1 of 1	Attorney Docket Number	WEBR-044/00US 303666-2049

U.S. PATENT DOCUMENTS

Examiner Initials*	Cite No.[1]	Document Number Number-Kind Code[2] (if known)	Publication Date MM-DD-YYYY	Name of Patentee or Applicant of Cited Document	Pages, Columns, Lines, Where Relevant Passages or Relevant Figures Appear
		US-2002/0162017-A1	10-31-2002	Sorkin	
		US-2004/0024864-A1	02-05-2004	Porras	
		US-2005/0005160-A1	01-06-2005	Bates	

FOREIGN PATENT DOCUMENTS

Examiner Initials*	Cite No.[1]	Foreign Patent Document Country Code[3] Number[4] Kind Code[5] (if known)	Publication Date MM-DD-YYYY	Name of Patentee or Applicant of Cited Document	Pages, Columns, Lines, Where Relevant Passages or Relevant Figures Appear	T[2]
		PCT/US2006/025378	09-18-2007	Piccard	Search Report and Written Opinion	
		PCT/US2007/067078	11-02-2007	Boney	Search Report and Written Opinion	
		PCT/US2007/067084	11-05-2007	Boney	Search Report and Written Opinion	
		PCT/US2006/041798	12-04-2007	Wilson	Search Report and Written Opinion	

Examiner Signature	/Mahfuzur Rahman/	Date Considered	02/13/2010

*EXAMINER: Initial if reference considered, whether or not citation is in conformance with MPEP 609. Draw line through citation if not in conformance and not considered. Include copy of this form with next communication to applicant. [1]Unique citation designation number (optional). [2]See attached Kinds of U.S. Patent Documents. [3]Enter Office that issued the document, by the two-letter code (WIPO Standard ST.3). [4]For Japanese patent documents, the indication of the year of the reign of the Emperor must precede the serial number of the patent document. [5]Kind of document by the appropriate symbols as indicated on the document under WIPO Standard ST.16 if possible. [6]Applicant is to place a check mark here if English language Translation is attached.

This collection of information is required by 37 CFR 1.97 and 1.98. The information is required to obtain or retain a benefit by the public which is to file (and by the USPTO to process) an application. Confidentiality is governed by 35 U.S.C. 122 and 37 CFR 1.14. This collection is estimated to take 2 hours to complete, including gathering, preparing, and submitting the completed application form to the USPTO. Time will vary depending upon the individual case. Any comments on the amount of time you require to complete this form and/or suggestions for reducing this burden, should be sent to the Chief Information Officer, U.S. Patent and Trademark Office, U.S. Department of Commerce, P.O. Box 1450, Alexandria, VA 22313-1450. DO NOT SEND FEES OR COMPLETED FORMS TO THIS ADDRESS. **SEND TO: Commissioner for Patents, P.O. Box 1450, Alexandria, VA 22313-1450.**

If you need assistance in completing the form, call 1-800-PTO-9199 and select option 2.

301150 v1/CO

ALL REFERENCES CONSIDERED EXCEPT WHERE LINED THROUGH. /M.R./

Please type a plus sign (+) inside this box ➔ +

PTO/SB/08A (07-05)
Approved for use through 07/31/2006. OMB 0651-0031

Substitute for form 1449A/PTO		Complete if Known	
INFORMATION DISCLOSURE STATEMENT BY APPLICANT		Application Number	11/408,146
		Filing Date	04/20/2006
		First Named Inventor	Matthew L. BONEY
		Group Art Unit	2154
(use as many sheets as necessary)		Examiner Name	
Sheet	1 of 1	Attorney Docket Number	WEBR-044/00US 303666-2049

U.S. PATENT DOCUMENTS

Examiner Initials*	Cite No.[1]	Document Number Number-Kind Code[2] (if known)	Publication Date MM-DD-YYYY	Name of Patentee or Applicant of Cited Document	Pages, Columns, Lines, Where Relevant Passages or Relevant Figures Appear
		US-2004/0064515 A1	04-01-2004	Alyn HOCKEY	
		US-2005/0268112 A1	12-01-2005	Yi-Min WANG	

FOREIGN PATENT DOCUMENTS

Examiner Initials*	Cite No.[1]	Foreign Patent Document Country Code[3] Number[4] Kind Code[5] (if known)	Publication Date MM-DD-YYYY	Name of Patentee or Applicant of Cited Document	Pages, Columns, Lines, Where Relevant Passages or Relevant Figures Appear	T[2]
		WO 98/45778	10-15-1998	Marc ZUTA		

OTHER – NON PATENT LITERATURE DOCUMENTS

Examiner Initials*	Cite No.[1]	Include name of the author (in CAPITAL LETTERS), title of the article (when appropriate), title of the item (book, magazine, journal, serial, symposium, catalog, etc.), date, page(s), volume-issue number(s), publisher, city and/or country where published.	T[2]
		PCT/US2007/067076 International Search Report and Written Opinion of the International Searching Authority mailed 11/02/2007	

Examiner Signature	/Mahfuzur Rahman/	Date Considered	02/13/2010

*EXAMINER: Initial if reference considered, whether or not citation is in conformance with MPEP 609. Draw line through citation if not in conformance and not considered. Include copy of this form with next communication to applicant. [1]Unique citation designation number (optional). [2]See attached Kinds of U.S. Patent Documents. This collection of information is required by 37 CFR 1.97 and 1.98. The information is required to obtain or retain a benefit by the public which is to file (and by the USPTO to process) an application. Confidentiality is governed by 35 U.S.C. 122 and 37 CFR 1.14. This collection is estimated to take 2 hours to complete, including gathering, preparing, and submitting the completed application form to the USPTO. Time will vary depending upon the individual case. Any comments on the amount of time you require to complete this form and/or suggestions for reducing this burden, should be sent to the Chief Information Officer, U.S. Patent and Trademark Office, U.S. Department of Commerce, P.O. Box 1450, Alexandria, VA 22313-1450. DO NOT SEND FEES OR COMPLETED FORMS TO THIS ADDRESS. **SEND TO: Commissioner for Patents, P.O. Box 1450, Alexandria, VA 22313-1450.**

If you need assistance in completing the form, call 1-800-PTO-9199 and select option 2.

288643 v1/CO

ALL REFERENCES CONSIDERED EXCEPT WHERE LINED THROUGH. /M.R./

Please type a plus sign (+) inside this box → +

PTO/SB/08A (08-00)

Substitute for form 1449A/PTO		Complete if Known	
INFORMATION DISCLOSURE STATEMENT BY APPLICANT		Application Number	11/408,146
		Filing Date	04/20/2006
		First Named Inventor	Matthew L. Boney
(*use as many sheets as necessary*)		Group Art Unit	2154
		Examiner Name	Not Yet Assigned
Sheet	1 of 3	Attorney Docket Number	WEBR-044/00US

U.S. PATENT DOCUMENTS

Examiner Initials*	Cite No.[1]	U.S. Patent Document Number	Kind Code[2] (*if known*)	Name of Patentee or Applicant of Cited Document	Date of Publication of Cited Document MM-DD-YYYY
		5,623,600		JI, ET AL.	04/22/97
		5,920,696		BRANDT ET AL.	07/1999
		5,951,698		CHEN ET AL.	09/1999
		6,069,628		FARRY, ET AL.	05/30/00
		6,073,241		ROSENBERG, ET AL.	06/06/00
		6,092,194		TOUBOUL	07/18/00
		6,154,844		TOUBOUL	11/28/00
		6,167,520		TOUBOUL	12/26/00
		6,310,630		KULKARNI, ET AL.	10/30/01
		6,397,264		STASNICK, ET AL.	05/28/02
		6,405,316		KRISHNAN ET AL.	06/2002
		6,460,060		MADDALOZZO, JR., ET AL.	10/01/02
		6,480,962		TOUBOUL	11/12/02
		6,535,931		CELI, JR.	03/18/03
		6,611,878		DE ARMAS, ET AL.	08/26/03
		6,633,835		MORAN ET AL.	10/14/03
		6,667,751		WYNN, ET AL.	12/23/03
		6,701,441		BALASUBRAMANIAM, ET AL.	03/02/04
		6,772,345		SHETTY	08/2004
		6,785,732		BATES, ET AL.	08/31/04
		6,804,780		TOUBOUL	10/12/04
		6,813,711		DIMENSTEIN	11/02/04
		6,829,654		JUNGEK	12/07/04
		6,910,134		MAHER ET AL.	06/2005
		6,965,968		TOUBOUL	11/15/05
		7,058,822		EDERY ET AL.	06/06/06
		7,107,617		HURSEY ET AL.	09/2006
		US 2002/0162015		TANG	10/2002
		US 2002/0166063		LACHMAN ET AL.	11/2002
		US 2003/0065943		GEIS ET AL.	04/2003
		US 2003/0074581		HURSEY ET AL.	04/2003
		US 2003/0101381		MATEEV ET AL.	05/2003
		US 2003/0159070		MAYER ET AL.	08/2003
		US 2003/0217287	A1	KRUGLENKO	11/20/03
		US 2004/0030914	A1	KELLEY, ET AL.	02/12/04
		US 2004/0034794	A1	MAYER ET AL.	02/19/04
		US 2004/0064736	A1	OBRECHT, MARK ERIC, ET AL.	04/01/04
		US 2004/0080529	A1	WOJCIK, PAUL KAZIMIERZ	04/29/04
		US 2004/0143763	A1	RADATTI	07/22/04

Examiner Signature	/Mahfuzur Rahman/	Date Considered	02/13/2010

*EXAMINER: Initial if reference considered, whether or not citation is in conformance with MPEP 609. Draw line through citation if not in conformance and not considered. Include copy of this form with next communication to applicant.

[1] Unique citation designation number.
[2] See attached Kinds of U.S. Patent Documents.

ALL REFERENCES CONSIDERED EXCEPT WHERE LINED THROUGH. /M.R./

Please type a plus sign (+) inside this box ➔ +

PTO/SB/08A (08-00)

Substitute for form 1449A/PTO		Complete if Known	
INFORMATION DISCLOSURE STATEMENT BY APPLICANT		Application Number	11/408,146
		Filing Date	04/20/2006
		First Named Inventor	Matthew L. Boney
		Group Art Unit	2154
(*use as many sheets as necessary*)		Examiner Name	Not Yet Assigned
Sheet	2 of 3	Attorney Docket Number	WEBR-044/00US

U.S. PATENT DOCUMENTS

Examiner Initials*	Cite No.[1]	U.S. Patent Document Number	Kind Code[2] (*if known*)	Name of Patentee or Applicant of Cited Document	Date of Publication of Cited Document MM-DD-YYYY
		US 2004/0187023	A1	ALAGNA, MICHAEL ANTHONY, ET AL.	09/23/04
		US 2004/0225877	A1	HUANG	11/11/04
		US 2005/0038697	A1	JEFFREY	02/2005
		US 2005/0154885		VISCOMI ET AL.	07/2005
		US 2005/0138433	A1	LINETSKY, GENE	06/23/05
		10/956,573		STEVE THOMAS	N/A Filed: 10/01/04
		10/956,574		STEVE THOMAS	N/A Filed: 10/01/04
		10/956,818		MATTHEW BONEY	N/A Filed: 10/01/04
		11/257,609		MICHAEL BURTSCHER	N/A Filed: 10/25/05
		11/237,291		PHILIP MADDALONI	N/A Filed: 09/28/05
		11/408,215		MATTHEW BONEY	N/A Filed: 04/20/06
		11/408,145		MATTHEW BONEY	N/A Filed: 04/20/06

Examiner Signature	/Mahfuzur Rahman/	Date Considered	02/13/2010

*EXAMINER: Initial if reference considered, whether or not citation is in conformance with MPEP 609. Draw line through citation if not in conformance and not considered. Include copy of this form with next communication to applicant.

[1] Unique citation designation number.
[2] See attached Kinds of U.S. Patent Documents.

ALL REFERENCES CONSIDERED EXCEPT WHERE LINED THROUGH. /M.R./

Please type a plus sign (+) inside this box ➔ +

PTO/SB/08A (08-00)

Substitute for form 1449A/PTO		Complete if Known	
INFORMATION DISCLOSURE STATEMENT BY APPLICANT		Application Number	11/408,146
		Filing Date	04/20/2006
		First Named Inventor	Matthew L. Boney
(*use as many sheets as necessary*)		Group Art Unit	2154
		Examiner Name	Not Yet Assigned
Sheet	3 of 3	Attorney Docket Number	WEBR-044/00US

FOREIGN PATENT DOCUMENTS

Examiner Initials*	Cite No.[1]	Foreign Patent Document			Name of Patentee or Applicant of Cited Document	Date of Publication of Cited Document MM-DD-YYYY	T[4]
		Office[1]	Number[2]	Kind Code[3] (if known)			

OTHER – NON PATENT LITERATURE DOCUMENTS

Examiner Initials*	Cite No.[1]	Include name of the author (in CAPITAL LETTERS), title of the article (when appropriate), title of the item (book, magazine, journal, serial, symposium, catalog, etc.), date, page(s), volume-issue number(s), publisher, city and/or country where published.	T[2]
	I.	Codeguru, Three Ways to Inject Your Code Into Another Process, by Robert Kuster, August 4, 2003, 22 pgs.	
	II.	Codeguru, Managing Low-Level Keyboard Hooks With The Windows API for VB .Net, by Paul Kimmel, April 18, 2004, 10 pgs.	
	III.	Codeguru, Hooking The Keyboard, by Anoop Thomas, December 13, 2001, 6 pgs.	
	IV.	Illusive Security, Wolves In Sheep's Clothing: malicious DLLs Injected Into trusted Host Applications, Author Unknown, http://home.arcor.de/scheinsicherheit/dll.htm 13 pgs.	
	V.	DevX.com, Intercepting Systems API Calls, by Seung-Woo Kim, May 13, 2004, 6 pgs.	
	VI.	Microsoft.com, How To Subclass A Window in Windows 95, Article ID 125680, July 11, 2005, 2 pgs.	
	VII.	MSDN, Win32 Hooks by Kyle Marsh, July 29, 1993, 15 pgs.	
	VII.	PCT Search Report, PCT/US05/34874, 07/05/06, 7 Pages	
	VIII	Yurcik, William et al., "A Planning Framework for Implementing Virtual Private Networks, June 2001, IT Pro, IEEE, pages 41-44	

Examiner Signature	/Mahfuzur Rahman/	Date Considered	02/13/2010

*EXAMINER: Initial if reference considered, whether or not citation is in conformance with MPEP 609. Draw line through citation if not in conformance and not considered. Include copy of this form with next communication to applicant.

[1] Enter Office that issued the document, by the two-letter code (WIPO Standard ST.3).
[2] For Japanese patent documents, the indication of the year of the reign of the Emperor must precede the serial number of the patent document.
[3] Kind of document by the appropriate symbols as indicated on the document under WIPO Standard ST. 16 if possible.
[4] Applicant is to place a check mark here if English language Translation is attached.

[1] Unique citation designation number.
[2] Applicant is to place a check mark here if English language Translation attached.

ALL REFERENCES CONSIDERED EXCEPT WHERE LINED THROUGH. /M.R./ Sophos Ex. 1014
Page 200 of 423

PCT

WORLD INTELLECTUAL PROPERTY ORGANIZATION
International Bureau

INTERNATIONAL APPLICATION PUBLISHED UNDER THE PATENT COOPERATION TREATY (PCT)

(51) International Patent Classification 6 : G06F 11/00

A2

(11) International Publication Number: WO 98/45778

(43) International Publication Date: 15 October 1998 (15.10.98)

(21) International Application Number: PCT/IL98/00170

(22) International Filing Date: 8 April 1998 (08.04.98)

(30) Priority Data:
120632 8 April 1997 (08.04.97) IL

(71)(72) Applicant and Inventor: ZUTA, Marc [IL/IL]; Ben Yehuda Street 19, 49373 Petah Tikva (IL).

(81) Designated States: AL, AM, AT, AU, AZ, BA, BB, BG, BR, BY, CA, CH, CN, CU, CZ, DE, DK, EE, ES, FI, GB, GE, GH, GM, GW, HU, ID, IL, IS, JP, KE, KG, KP, KR, KZ, LC, LK, LR, LS, LT, LU, LV, MD, MG, MK, MN, MW, MX, NO, NZ, PL, PT, RO, RU, SD, SE, SG, SI, SK, SL, TJ, TM, TR, TT, UA, UG, US, UZ, VN, YU, ZW, ARIPO patent (GH, GM, KE, LS, MW, SD, SZ, UG, ZW), Eurasian patent (AM, AZ, BY, KG, KZ, MD, RU, TJ, TM), European patent (AT, BE, CH, CY, DE, DK, ES, FI, FR, GB, GR, IE, IT, LU, MC, NL, PT, SE), OAPI patent (BF, BJ, CF, CG, CI, CM, GA, GN, ML, MR, NE, SN, TD, TG).

Published
Without international search report and to be republished upon receipt of that report.

(54) Title: ANTIVIRUS SYSTEM AND METHOD

(57) Abstract

In an antivirus multiprocessor system, a second processor attached to a first processor for monitoring its performance and intervening if predefined behaviour thereof is detected. The second processor includes means for continuously supervising the operation of the first processor to detect virus–related activities therein by comparing actual performed instructions in the first processor with instruction sequences corresponding to known viruses or to predefined suspect behaviour. It will stop the first processor after a virus detection. A plurality of sensors is used to detect suspect activity in various media like radio frequency or wireless RF, serial or parallel communication channels, ultrasound, sonic or subsonic waves, power lines and/or optical media including infrared, visible light and/or ultraviolet. An antivirus protection method includes the steps of: A. connecting a second processor to an applications processor; B. using the second processor to continuously monitor the activities on the first processor and to compare to predefined forbidden activities; and C. taking actions in real time when a forbidden activity takes place, to prevent damage to the applications processor.

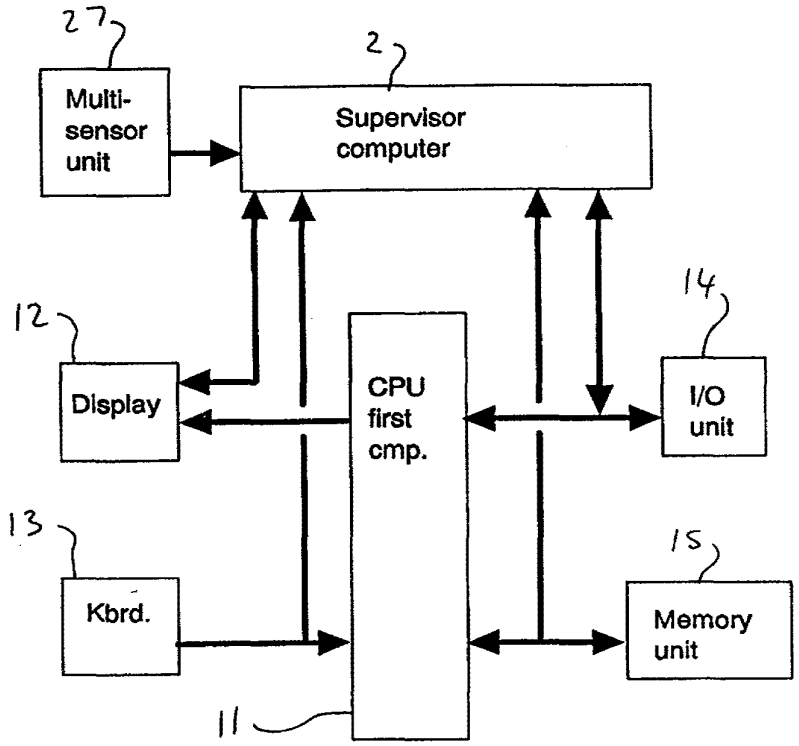

FOR THE PURPOSES OF INFORMATION ONLY

Codes used to identify States party to the PCT on the front pages of pamphlets publishing international applications under the PCT.

AL	Albania	**ES**	Spain	**LS**	Lesotho	**SI**	Slovenia
AM	Armenia	**FI**	Finland	**LT**	Lithuania	**SK**	Slovakia
AT	Austria	**FR**	France	**LU**	Luxembourg	**SN**	Senegal
AU	Australia	**GA**	Gabon	**LV**	Latvia	**SZ**	Swaziland
AZ	Azerbaijan	**GB**	United Kingdom	**MC**	Monaco	**TD**	Chad
BA	Bosnia and Herzegovina	**GE**	Georgia	**MD**	Republic of Moldova	**TG**	Togo
BB	Barbados	**GH**	Ghana	**MG**	Madagascar	**TJ**	Tajikistan
BE	Belgium	**GN**	Guinea	**MK**	The former Yugoslav	**TM**	Turkmenistan
BF	Burkina Faso	**GR**	Greece		Republic of Macedonia	**TR**	Turkey
BG	Bulgaria	**HU**	Hungary	**ML**	Mali	**TT**	Trinidad and Tobago
BJ	Benin	**IE**	Ireland	**MN**	Mongolia	**UA**	Ukraine
BR	Brazil	**IL**	Israel	**MR**	Mauritania	**UG**	Uganda
BY	Belarus	**IS**	Iceland	**MW**	Malawi	**US**	United States of America
CA	Canada	**IT**	Italy	**MX**	Mexico	**UZ**	Uzbekistan
CF	Central African Republic	**JP**	Japan	**NE**	Niger	**VN**	Viet Nam
CG	Congo	**KE**	Kenya	**NL**	Netherlands	**YU**	Yugoslavia
CH	Switzerland	**KG**	Kyrgyzstan	**NO**	Norway	**ZW**	Zimbabwe
CI	Côte d'Ivoire	**KP**	Democratic People's	**NZ**	New Zealand		
CM	Cameroon		Republic of Korea	**PL**	Poland		
CN	China	**KR**	Republic of Korea	**PT**	Portugal		
CU	Cuba	**KZ**	Kazakstan	**RO**	Romania		
CZ	Czech Republic	**LC**	Saint Lucia	**RU**	Russian Federation		
DE	Germany	**LI**	Liechtenstein	**SD**	Sudan		
DK	Denmark	**LK**	Sri Lanka	**SE**	Sweden		
EE	Estonia	**LR**	Liberia	**SG**	Singapore		

Antivirus System and Method

Technical Field

This invention concerns antivirus protection systems and methods. The invention relates in particular to such systems in which a second (supervisor) processor is added to a first (applications) processor to continuously monitor its operation so as to prevent damage from viruses or software errors.

Bakground Art

With the proliferation of personal computers and of software therefor, there is a tendency for the hardware to become more and more powerful, and for the software packages to become more and more complex. Software packages nowadays take large disk space, in the range of megabytes to tens of megabytes each.

Heretofore, in this new environment, the computer has become less "personal", in the sense that the user cannot supervise the operation of the computer, or have a reasonable measure of assurance about what the computer is actually doing.
The result is that there are occurences of the computer not doing what its owner intended it to do. Rather, sometimes, the computer is doing something else, which causes damage to the user. The user usually learns too late of the damage, and sometimes may not know about it at all.

The very advantages of the computer have become its greatest weakness: Since the computer is fast and powerful, much damage can be done in a very short time. Before the user can intervene, in a time span of miliseconds, a virus can delete hundreds of files and megabytes of memory.

Presently used software packages are very large, including hundreds of files each, in tens of subdirectories, and taking tens to hundreds of megabytes. It is practically impossible for the user to verify all these files to detect a virus or to assess the damage done to these files.

Computers are used for communications. Much information and many programs are available in the INTERNET, for example. How is one to be sure that the information or programs are not contaminated?
The widely used E-Mail messages may include viruses therein.

The problem is much aggravated in computer networks. A network includes tens to hundreds of computers, each vulnerable to attack and capable of transmitting a virus to other computers. Moreover, a network is usually open to access from the outside, so that a malicious person can connect to a network without physically breaking into the victim's facilities. Much harm can be done from far away.

Following are several examples of computer malfunction instances.

1. Computer viruses. These are programs maliciously introduced into the user's computer, with the express purpose of causing damage.

Sometimes the virus erases information stored in the computer. Other times the virus alters the information without the user's permission. Viruses are known to create dummy files or enlarge existing files, which clutter the memory storage unit, so that the user may not have enough memory left for their purposes.

The name "virus" apparently came from a property of these programs to copy themselves to other media like diskettes, and therefrom to other computers, so that the "virus" is actually "spreading" to "contaminate" other computers.

One approach to the computer virus is the "antivirus" software, which stores digital patterns, each characteristic to a known virus. When starting the computer or inserting a diskette, the antivirus program scans the memory and compares the patterns therein with the stored patterns.

An alarm is activated if the patterns correspond, this indicating the presence of a virus.

The big problem with this approach is that only known viruses, that is viruses whose characteristics are stored in the program, can be detected. It appears that new viruses are continuously created, which are not detected nor protected against by the antivirus programs. In this war between virus and antivirus, the virus will always win, by its time lead. Thus, antivirus programs cannot prevent damage from new viruses which are not included therein.

Another problem with this approach is that the memory is only scanned prior to its use. A self-changing virus can become active after it was scanned, while the antivirus is no longer active.

If an antivirus program is used concurrently with the application, then there is a deterioration in performance, since the same processor is used to alternately perform instructions pertaining to the antivirus and the application. Thus, the application will take more time to run.

Moreover, antivirus programs do not indicate the source of the virus, that is which program contains it. At present, the user does not know which program caused the damage or inserted the virus, thus action cannot be taken at source, to stop that source of viruses and/or to claim damage compensation. The required evidence to prosecute the culprit is not available.

Antivirus programs do not help the user regain control of his/her computer. The program only demands to "clean" the virus, without reporting to its user which files are contaminated and what are the consequences of the cleanup, or allowing any choices to the user.

It is believed by the present inventor that software means cannot be used to protect from another software. A virus can tamper with the antivirus program itself, so that further actions by the user and/or updates of the antivirus are meaningless and useless.

Brute force approaches like denying access to disk or forbidding write operations make the computer practically useless, since a large part of the activity with computers is to read/write files and operate on information. Such a measure may be taken for a limited time. When the user can take it no more and disables the protection, the computer is completely vulnerable to attack.

2. Backdoors, for example a communication program including a routine to allow unauthorized access to another's computer by an outsider. Remote diagnostic programs are a needed feature in computers and networks; the same programs can be used by unauthorized people as backdoors to gain access to the victim computer.

Thus, unauthorized person A can remotely connect to the computer of user B. The trapdoor in user's B computer, of which B is not aware, allows A to access confidential files in that computer, to read them or make changes or to otherwise do damage. It is even possible for user B to connect to a remote computer, without that user being aware of the fact that the other party may use that trapdoor during that same session.

Trapdoors can also be used to introduce viruses, possibly with delayed action, or to access privileged information.

It was stated that most of the damage to computers to any firm is done by employees or former employees at that firm.

The inside knowledge gained during employment there may be used to bypass safequards and do damage.

3. Undesired TSRs (Terminate and Stay Resident programs).
A personal computer, during the several seconds it takes to prepare itself at turn-on until it is ready to accept user's commands, may perform tens to hundreds of millions of instructions. Some programs instruct the computer to be left and active in the memory, thus influencing the computer operation thereafter. This is basically a desirable action, for example a TSR to detect the activation of the mouse and to respond accordingly.

Unfortunately, with the advent of viruses, some TSRs come to perform undesired functions. For example, a maliciously introduced TSR may slow down the computer, by repeatedly performing an unnecessary piece of useless code, without user's knowledge.

The end result is that the computer performs slower than is to be expected, thus preventing the user from getting the full performance from the computer.

4. Unorganized or conflicting TSRs .
Nowadays a personal computer contains tens of different programs, each with its own TSR, all competing for the same computer resources and giving sometimes contradicting instructions to the computer. No software provider takes responsibility for the coexistence of the various programs in the computer.

The user is helpless and cannot intervene, since he/she does not know what is actually going on inside the computer.

5. Uninstall of software packages. It is sometimes difficult to remove a package which is no longer desired. Today software packages are large, tens of megabytes each, with hundreds of files being created on disk and changes performed on existing files. It is sometimes difficult to remove files scattered all over a large disk and to undo changes to existing files.

The problem is that the user sometimes is not completely aware of actions performed by the software package during installation. Sometimes, even with the most friendly install routine, the user will not bother to record all the actions performed, for each package installed, this being a tedious task. Human factors are as important as technical ones, and should be given careful attention.

Moreover, means for protection agains viruses should provide reliable protection, without leaving any doubt as to whether the protection device itself is secure or was compromised by a virus.

The protection means should provide the desired protection without a sizable degradation in the overall performance of the computer.

The protection means should perform its tasks without demanding too much of user's attention or intervention. Eventually, any protection means which is not easy to use will be disposed of.

It is an objective of the present invention to provide for an antivirus system and method using a first and a second processor means for overcoming the abovedetailed disadvantages.

Disclosure of Invention

It is an object of the present invention to provide an antivirus system and method using a multiprocessor system comprising a first processor for performing application programs and a second processor for continuously supervising the operation of the first, to protect it from misuse.

The object is achieved by an antivirus system as disclosed in claim 1.
In accordance with the invention a second processor, the supervisor, is attached to the first processor, the application processor, so that the supervisor includes means to continuously monitor the activity in the application processor, to detect viruses and abnormal operations.

The supervisor further includes means for intervening to stop the applications processor and/or to issue a warning when the virus is detected, to prevent damage.

According to a second object of the present invention, the supervisor itself is protected from attack. It has its own computer and memory, which are independent from the application processor and are protected from any attack by a virus in the application processor. Additional means protect from physical attack.

According to a third object of the present invention, the supervisor computer includes a combination of fast monitoring means in hardware, with smart verification means in a programmed device. These means operate together to protect from known viruses as well as from unknown viruses according to their suspect behavior.

According to a fourth object of the present invention, the supervisor method of operation allows both for detection of viruses in real time, and for smart monitoring of sensitive operations without a sizable decrease in performance. Operation at several levels of complexity is disclosed.

According to a fifth object of the present invention, the supervisor performs a smart verification method, to detect potentially dangerous activities.

According to a sixth object of the present invention, means are detailed for the supervisor to detect viruses without slowing down the applications processor.

According to a seventh object of the present invention, the supervisor includes a multisensor unit which monitors everything going on, in and around the application processor, including a plurality of sensors for sensing the various effects indicative of the presence of a virus.

Further objects, advantages and other features of the present invention will become obvious to those skilled in the art upon reading the disclosure set forth hereinafter.

Brief Description of Drawings

The invention will now be described by way of example and with reference to the accompanying drawings in which:

Fig. 1 is a simplified functional diagram, illustrating the attachment of a supervisor computer to an application computer.

Fig. 2 is a simplified electrical diagram illustrating the attachment of a supervisor computer to an application computer.

1

Fig. 3 details the functional structure of supervisor computer

Fig. 4 details the structure of real time monitoring means

Fig. 5 details the omparator structure and operation

Fig. 6 illustrates the structure of monitoring means using digital signature

Modes for Carrying out the Invention

A preferred embodiment of the present invention will now be described by way of example and with reference to the accompanying drawings.

Fig. 1 illustrates the attachment of supervisor computer 2 to an application computer. The application computer, in this simplified functional diagram, includes a Central Processor Unit CPU 11, connected to display means 12, keyboard 13, Input/Output unit (I/O) 14 and memory unit 15.

The application computer is the original computer which provides the computer functions desired by the user, and to which is added the supervisor 2 to ensure that indeed it will perform the desired functions, without the interference of viruses or malevolent programs.

One function of the supervisor 2 is to monitor activity on busses of CPU 11, like data, control and address between CPU 11 and memory 15, and input/output activity between CPU 11 and I/O means 14. Supervisor 2 connects to these busses to watch instructions and check if some forbidden activity is about to take place. It searches for known viruses patterns or privileged instructions which require authorization.

The monitoring is done concurrently with normal operation of the application computer, without slowind it down. Supervisor 2 reads commands and data "on-the-fly" in real time.

Another function of supervisor 2 is to act to stop or prevent forbidden activity, after detecting a virus as mentioned above. This is done by: activating a signal to CPU 11 to Reset processor or bring it to Wait state or stop CPU 11 and put its activities under closer scrutiny or log the activities performed.

A third function of supervisor 2 is to perform protected, direct dialog with the user, using the application computer resources like the keyboard 13 and display 12. Supervisor 2 has direct access to these devices, and it can also immobilize the CPU 11 during the dialog with the user. This is used to reliably notify the user of virus problems, to ask questions regarding permitted operations and to accept instructions from the user, like the subdirectories it is permitted to read and/or write files therein.

Moreover, the information in computer 2 can be updated by reading from a diskette (not shown), for example to update the list of viruses. Again, this is preferably done while CPU 11 is not active, to avoid interference with, or eavesdropping to, these activities by a potential virus or ilegitimate program in the applications processor.

The applications computer is deactivated using, for example, its RESET or HOLD or WAIT while supervisor 2 is using the resources therein like the diskette or keyboard or I/O channel.

Thus, the functions of supervisor 2 is to watch and report, prevent disaster, help recover from problem, let the user know how disaster happened, and who caused it.

The multisensor unit 27 supports the monitoring function of supervisor 2, by providing additional information relating to possible effects of viruses.

Thus, a virus can establish a communication link with an unauthorized outsider using any of a wide variety of media, for example through a wireless or RF link, ultrasonic or sonic or subsonic waves, signals on the power lines etc. High frequency signals can be transmitted over power lines to outside the firm or the user's home.

Other possible links may include existing serial or parallel communication channels, like an RS-232 link to a modem or a local net or a phone dialer. These links may be activated under a virus control without the permission or knowledge of the legitimate user. Other possible links may include optical media including infrared, visible light and/or ultraviolet.

Unit 27 includes a plurality of sensors for monitoring the various media for any potential undesired activity. The user may not be able to otherwise sense these activities which may go on about their computer.

Thus, the antivirus system and method uses a first processor, including CPU 11 and related units, for performing application programs and a second processor 2 for continuously supervising the operation of the first, to protect it from misuse. The supervisor 2 is attached to the application processor, wherein supervisor 2 includes means to continuously monitor the activity in the application processor, to detect viruses and abnormal operations. The monitoring is done in real time.

The supervisor further includes means for intervening to stop the applications processor and/or to issue a warning to user when the virus or abnormal operation is detected, to prevent damage to the application processor.

Fig. 2 details the electrical attachment of a supervisor computer 2 to an application computer, in a simplified block diagram.

The supervisor computer 2 connects, or couples to a first processor, that is the applications computer. The multisensor unit 27 gives the supervisor 2 the ability to monitor the various media around the applications computer, as detailed below.

The applications computer includes the CPU 11, display means 12, keyboard 13, Input/Output unit (I/O) 14, memory unit 15 and other resources 16. All these devices are connected to each other through control/data/address bus 17, as known in the art.

Supervisor 2 connects to bus 17, thus gaining access to all the resources of the application computer. Whereas supervisor 2 monitors activity on the applications computer through bus 17 and exercises control over the application computer if need be, it does not use the memory 15 of the applications computer to store its programs or data.

By including (not shown) its own, separate processor and memory with programs and data, supervisor 2 is protected from attack by virus in the applications computer.

Supervisor 2 includes means to protect from physical attack, tampering with, removal from bus 17. Its board (not shown) is encased in hard plastic, to prevent access to its components. Mechanical means may be included (not shown) to lock to motherboard or bus 17 of applications computer.

Additional physical protection means include the supervisor 2 board being soldered to the connector of bus 17, or the supervisor being produced as an integral part of the motherboard of the applications computer.

In another embodiment, the supervisor 2 is manufactured as an integral part of the CPU 11. This achieves a CPU which is protected from viruses, and is practically impossible to separate between the actual CPU and its protection means.

Thus, the supervisor 2 itself is protected from attack. It has its own (not shown) computer and memory, which are independent from the application processor and are protected from any attack by a virus in the application processor. Additional means protect from physical attack.

Fig. 3 Illustrates one embodiment of the functional structure of the supervisor 2 mentioned in Figs. 1 and 2 above. The supervisor includes a combination of fast, real time monitoring means including units 22, 23, 24 and a slower, smart unit comprising controller 21.

Following is a detailed description of the structure and operation of the supervisor.

The supervisor structure includes the following means:

1. monitoring means, including registers 22 and 23 and comparators 24, to evaluate operation of first processor in real time for detecting abnormal operation, to stop first computer and issue alarm or warning or indication to controller 21. A shift register 22 continuously receives and shifts in real time instructions read in the first, or the supervised, computer. A plurality of comparators 24 each compares the instruction string with the string of a known virus or a predefined suspect behavior, to detect viruses in real time.

2. controller means 21 to: initiate the monitoring means at start-up, take actions when alarm is issued, dialog with user, program/update internal memory, log and analyze activities performed prior to an alarm or a virus attack. A smart analysis is done to detect suspect behaviour, indicative of virus, after receiving indication from monitoring means.

3. internal memory 25 – for virus patterns and forbidden/ privileged instructions, log of activity prior to virus, allowances in each application program (different set of allowances and masks for each application, according to user's instructions).

The memory can be implemented in the controller IC itself or in a separate IC or ICs or on disk, if adequate safeguards are taken to protect that disk area.

4. multisensor unit 27

The bus 17 of the applications computer, including control, data, address is coupled to comparator shift register 22. Various embodiments are possible, with corresponding levels of performance and circuit complexity. The simplest is to couple only the data bus to shift register 22, using part of the control signals to strobe the data in at the correct timing, as known in the art.

Control signals on bus 17 indicate when an instruction is on the bus, whether this is a memory or I/O operation, whether it is a Read or Write. Register 22 can be wired accordingly to accept a new sample for each new instruction, or only for memory read, or for all data bytes on the bus. This embodiment is suitable for recognizing instructions and various routines.

A more complex embodiment reads into register 22 the data together with the address and the control signals. This enables to search for instructions relating to specific addresses in RAM, like reading from the interrupt vectors area or the DOS sections, or writing to these locations, which are privileged locations. This embodiment requires a wider register 22, that is each stage contains more bits.

Register 22 includes a plurality of stages (not shown), each k bits in parallel. As a new sample is read in from bus 17, all the previous samples are shifted one stage to the right. The oldest sample is transferred out of register 22, to log shift register/FIFO 23.

The samples in the various stages of register 22 are output to extended processor bus 220. Thus, bus 220 contains the data bus and optionally also control and address, for a plurality of times: the last sample, the sample a clock ago, then two clocks ago etc...to 100 or several hundred samples.

Bus 220 contains the words or bytes for the last instructions on the bus 17. These instructions are compared in comparator unit 24 with the instructions for a specific virus, or the instructions sequence for a sensitive operation which demands scrutiny by contoller 21. The monitoring unit contains a plurality of comparator units 24, each programmed to detect one virus or privileged instruction, as detailed below. All the comparators 24 operate concurrently in real time. Each comparator 24 includes a string of a specific virus or instruction sequence, and possibly an ignore mask to ignore irrelevant parameters in the instruction string.

The comparators 24 issue an alarm/warning/action on bus 28, which includes busses 241 and 247. Thus, alarm/warning /action bus 28 is used to issue the alarm/warning if a suspect string or instruction was detected. The bus 28 combines with similar busses from the other comparator units, all connected in parallel.

Bus 28 contains action signals, comprising command bus 247, to take immediate action (fast) if a dangerous string is detected, to RESET or HOLD in wait the applications computer for example. Bus 28 also includes the report alarm bus 241, to report to controller 21 that an alarm/warning or other virus-related activity took place. The specific word on bus 241 can indicate the type of action or virus which was detected.

Thus, according to preprogrammed parameters, when an expected instructions sequence is detected in one of the comparators 24, then the application computer can be immediately stopped if necessary, and the controller 21 notified. If a less dangerous instruction is detected, then controller 21 can be notified without stopping or resetting the applications computer.

Supervisor controller 21 includes nonvolatile memory means 25 holding its programs and parameters, like the virus list. This information is protected from access from the applications computer through bus 17. Thus, programs in supervisor computer are protected from access from outside. The programs for controller are not changeable, to prevent tampering with. No software or virus in PC can affect the second processor. No event in PC can change the programs in second computer, including the user or a virus or any program or occurence in PC.

The internal storage is tamper-proof by application processor. Preferably the programs, parameters (whatever influences operation) are stored in internal ROM/PROM/ CMOS RAM/ Flash Memory.

Time/ date unit 26 serves to perform time-sensitive functions. For example, controller 21 can check the number of different files addressed by an application per second. Too many files acessed in a short time is a suspect activity, suggesting a virus. Time can also be used to log activities, to provide evidence for subsequent legal action.

Controller 21 also reads the report activity bus 231, to read past instructions from register 23, so as to reconstruct activity prior to alarm.
Log shift register/FIFO 23 can be longer than register 22, since only the final stage output goes to an output bus 231. It can keep log of thousands to hundreds of thousands of the last instructions. This allows controller 21 to inspect and find what events took place prior to the virus attack, or where the virus come from.

Controller 21 can take direct control over the application computer through bus 217. This bus can include (not shown) lines to Hold that computer inactive, or to Reset it, together with control, data and address lines to gain access to the application computer and its resources, for example using DMA.

Load parameters bus 29 is used by controller 21 to load parameters into comparators 24, each with a different instruction or instruction string and a corresponding "ignore" mask for each byte or bit, and a desired action to take if that string is detected.

It is possible to update the information/parameters in memory 25, while updates are done under controller 21 supervision. Encrypted messages may be used to program new virus patterns. It is preferred not to allow programming controller while the application is operational, but only with applications stopped by controller 21.

In another embodiment, monitoring means includes means (not shown) for computing digital signature or CRC (Cyclic Redundancy Code) and comparing with signature of viruses, instead of directly comparing bytes. This saves hardware. The embodiment is illustrated in Fig. 6. It is possible (not shown) to use one comparator, while multiplexing virus signatures and masks, to save hardware.

Another embodiment (not shown) uses a DSP (Digital Signal Processor) means or other programmed device instead of hardware, to compute signatures or directly compare with string of bytes and/or to perform masking operations. Very fast processors may be used to perform comparison with virus string as detailed above using a microprogrammed implementation of the abovedetailed structure and its operation method, as detailed with reference to shift register 22 and the comparators 24.

Thus, the supervisor computer includes a combination of fast monitoring means in hardware, with smart verification means in a programmed device. These means operate together to protect from known viruses as well as from unknown viruses according to their suspect behavior.

The controller 21 performs the following functions, in addition to the smart verification which is detailed in the following chapter:

1. Loader, at power-up loads all patterns and ignore to all registers from a mass storage like a Flash Memory.

2. Programmer to accept updates, check validity, then write update in nonvolatile memory. Memory is nonvolatile, like flash or cmos or similar, or magnetic. Internal in supervisor.

3. Update programs, data in internal memory. Can be changed only when entered with special format and CRC and/or encrypted, to enable update of virus list, programs etc by responsible provider. Responsible to user as to integrity of program. PC is in reset or wait during this update, so no virus or nonhonest user can watch, record or tamper with program update in second computer.

Supervisor Computer Operation

There are several possible embodiments, from the simple to complex. These are made possible with the structure detailed above, with monitoring unit including registers 22 and 23 and comparators 24 (fast comparison) under the supervision of the controller 21 (smart analysis):

1. Simple operation, virus pattern detection. At power-up the controller 21 loads known viruses into the monitoring means hardware, that is in comparators 24.

During the subsequent operation of the first computer (the application computer or PC or computer network), the monitoring means act to continuously detect viruses and stop the PC to prevent damage. Controller 21 is inactive, except to display the log of instructions prior to alarm, to report to user what happened there.

2. Guided scan protection: the monitoring means is programmed to detect the activity in the application PC of a piece of code being loaded to RAM for execution. When this activity is detected, the application CPU is stopped and the controller 21 is prompted accordingly. The controller 21 then reads all the instructions which are in RAM and ready for execution in the PC, just prior to their execution, by using bus 217.

While the instructions are thus read, the monitoring means reads samples through bus 17 into register 22 as detailed above and searches in real time, in hardware, for all the known viruses which are programmed therein. Thus, even viruses with self-changing code are detected, since this method verifies each piece of code just prior to its execution.

3. Two-stage protection: comprises fast real-time verification using the monitoring monitoring means, and a higher level, slower, smart verification using the controller 21, for sensitive operations.

At power–up the controller 21 loads known viruses pattern as well as sensitive operations which demand further scrutiny, like interrupts or file operations or I/O. The smart verification is detailed below.

During normal operation thereafter, if a virus is detected then the monitoring means act promptly to stop the applications CPU through bus 247, to prevent damage. If a sensitive operation is detected in the monitoring unit, then the CPU is temporarily stopped and the controller 21 is prompted through bus 241 to perform a smart, in–depth analysis of the situation.

This may be done in addition to controller 21 acting to report virus activity, as for the simple operation detailed above. This embodiment includes the simple hardware protection and further, the second level of verification/protection.

Advantage: protects from attack by yet unknown viruses, with unknown patterns, by detecting suspect activities. These are activities expected from viruses, like writing to files, changing files and more.

Rational: smart tests are difficult to perform in hardware, but are easier to implement in software, in the programmed controller. This, however, takes time and cannot be performed in real time, while the PC operates as normal. According to the present invention, the smart tests are performed for sensitive operations in the PC, which operations are slower than the rest. For example, disk operations are slow since they involve the mechanical movements of the disk head and platter, and take time in the order of milliseconds.

The PC is preferably stopped during the smart test performance.
Thus, the additional time it takes to perform the smart test has no considerable effect on the overall performance of the PC, since smart test can be peformed in about 10 – 100 microseconds, this time being so much shorter than the sensitive operation in the PC, that the overall performance is not much affected.

The smart test can be peformed is such a short time, for example using a 16–bit controller like the Intel 80196.
Similarly, I/O operations like a modem have a relatively slow bit rate, and take overall time in the order of seconds to minutes. Thus, a smart verification prior to the actual performance of the I/O function has no sizable effect on overall PC performance.

4. Active protection: may be performed in addition to the two–stage method. The controller 21 initiates activities in the PC, which are expected to stimulate or provoke viruses into action. Thus the virus is detected, by its activity.
The controller creates a controlled environment, wherein the activity of the PC can be completely predicted; any deviations from the expected activity are the result of a virus, thus the virus is detected before it has a chance to attack.
This is an offensive method of operation, wherein the protection means strikes first to provoke the virus, then to detect it and neutralize it.

Thus, the supervisor method of operation allows both for detection of viruses in real time, and for smart monitoring of sensitive operations without a sizable decrease in performance. Operation at several levels of complexity was disclosed.

Smart Verification Method

This method is performed by controller 21, after it is prompted through bus 241 that a sensitive instruction or sequence of instructions took place. It includes various routines for analyzing the activities in the PC from several aspects.

1. Monitors execution since init or reset. Logs TSR loading, disk access, communications access, especially in the initial stages of the application computer or PC operation. Logs autoexec.bat and config.sys execution, with the actual performance taking place.

2. Pays attention to special instruction or access to specific locations like access to directory or to boot sector, writing to exe, com , bat or sys files, reading too many different files in a short time, accessing files outside a permitted subdirectory, writing to files without some processing or user input (without apparent reason or prompting to do so).

3. Logs install or setup performance, to allow delete install

4. Logs TSR installation, and verifies TSR execution in actual life

5. Tracks virus to source; reports which program initiated, introduced virus in our PC, to take legal action again those responsible for virus. Logging the virus activity and tracing it to source can provide the required evidence to prosecute the culprit.

6. Communicates with user through keyboard, display, diskette, I/O

7. Keeps records in PC disk. May encrypt to preserve on disk. Prevents PC from access to those areas, like from a virus.

8. Logs creation of files on disk. In previous art computers, various applications create *.tmp, or temporary files, of size 5 – 15 megabytes, which clutter disk. If deleted, may interfere with applications. If this is malicious – user may want to know which program did it. If it is an error by programmer – user may want to know , to ask why there are retainted files to clutter disk. A notification may be issued like:

"you forgot a file or 100 files ... in my computer.." .

9. Reports to user by RS–232 or other I/O, while keeping PC inactive to prevent a virus therein from tampering with the transfer or to log it, for later misuse of information, keys or communication protocol.

10. Define illegal activities, or those which require user's manual approval. If detected– stop it and report. for example– request of information by LAN. Prompt from LAN or I/O or Internet to read file or to change it or delete information.

11. Read part of each TSR loading at init/reset into comparator units, to check how often they execute. If it is done too ofter– maybe virus. Report all TSRs being loaded; by whom; memory RAM occupied.

12. Log, monitor disk/diskette access. Too often is unnecessary, results in wear and tear of mechanical parts. Maybe reading information which is not really necessary, or doing damage to many files.

13. Log, monitor access to too many files at once, during short time period. In normal use, computer works with limited number of files. Monitor access to too many subdirectories. User can limit operation to several or few subdirs or to specific areas of disk.

14. Define forbidden combination of activities: ie communications + access to specific subdirs. or comm + printing. or comm + access to other than one subdir, where we deposited a file to read or write. Then load these to comparator units 24, to report back to controller 21 if detected.

15. Special adaptive comparator unit (or several such): freezes a pattern of executed instructions from SR 22 to registers, to compare with itself later on. Detects a virus which creates dummy loops, repetitive execution of unnecessary programs. Method of use: From time to time, at random, controller 21 reads pattern of instructions now executing through bus 231, and load through bus 29 into comparators 24.

The comparator then checks for repetitions of this patterns, and reports to controller. If the pattern repeats too often, it may be a virus. If not, then after a set time a new instructions string is read at random and compared with thereafter.

This solves the problem of a virus slowing down computer operation by initiating it to do unnecessary, dummy commands. It performs an adaptive monitoring and detection of unnecessary repetitions of code.

16. Correlator between program executing and disturbances monitored by sensors (multi-sensor unit 27). If there is correlation – stop and report to user. The user may be unaware that activity in his/her computer are a result of commands received from the LAN or Internet or a bug operated by radio for example, or with ultrasonic waves.

Thus, the supervisor performs a smart verification method, to detect potentially dangerous activities.

Fig. 4 details the structure of real time monitoring means in one embodiment, in simplified block diagram. This is the monitoring means hardware, used to monitor without slowing down the PC or application computer.

Data multiplexer and latches means 222 is used to read information from the applications computer bus, including data bus 172, control bus 173 and address bus 174. These are part of control/data/address of applications computer 17. Means 222 may read all or part of these busses. The PC bus uses data, address, control on 8 or 16 or 32 bit bus. Means 222 aligns the bus by bytes for proper analysis of programs execution, or brings into other uniform form the input samples.

The result is samples of instruction/data bus 223, which are transferred to comparator shift register 22. After input, these samples are shifted to present an instructions sequence for the comparators 24, to compare with existing viruses.

Bus 223 may contain, in addition to data and commands, also the status, strobe etc– the CPU controls issued on the bus. This provides the context of data issued or read: rd/wr, IO/memory, bus width.

These are specific to each CPU like the Intel 386 or Pentium, Motorola 68020, Analog Devices DSP 21020, 21060, and should be interpreted as such.

The shift register includes two parts:
comparator shift register 22, including stages like 224, 225. It shifts the data, commands all the time to the right, then to output bus 229;
and
log shift register/FIFO 23 , which shifts all the time as well, with its output bus 231 connected to controller (not shown).

Register 22 is used for comparison with patterns to search. It is small, about 100– 200 samples with outputs at every stage/sample (internal to supervisor). The first output is the data bus latest output C0 226, with subsequent outputs for previous samples. Thus, data bus i–th output Ci 227 represents one of the n stages in SR 22, and data bus earliest output Cn 228 is the oldest sample in register 22. The busses 226, 227, 228 comprise the abovementioned bus 220.

Register 23 keeps log of last operations, to track virus to source, by reconstruction of activity performed prior to virus attack/detection large, about 10 – 100 ksamples. Contains only output total 231, to controller 21.

Output busses from register 22, including bus 226, 227, 228 are connected in parallel (the same data) to a multitude of comparator units 24, each including:

1. instruction/data reference register 31, which is fixed after initial loading from controller. It includes a plurality of stages, corresponding to the stages of register 22, and with output bus at each stage, of which are shown the reference bus latest value R0 316, the reference bus i–th value Ri 317 which represents one of the n stages in register 31, and the reference bus earliest value Rn 318. The load reference bus 291, part of parameters bus 29, is used to load the initial values into register 31 at power–up.

This programmed structure allows for flexible operation, to load various viruses or instruction strings to be searched for.

2. a plurality of comparator stages in parallel. Illustrated is the comparator first stage 331, for last instruction value. It compares latest output C0 226 with corresponding reference R0 316, using AND mask from bus M0 326. The comparison is bitwise, that is each of k bits of bus C0 226 is compared with a corresponding bit of bus R0 316, with mask bit from M0 326 being applied to allow or ignore the result, then all the partial bit results are collected to result in result of comparison 361, which is detailed below.

Similarly the comparator stage 333, is used for earlies instruction value. Compares earliest output Cn 228 with corresponding reference Rn 318, using AND mask from bus Mn 328. The result of comparison 363 is the output.

AND gate 334 sums up all the results of comparison 361, 363 and all the results in between (n in all), to issue alarm strobe 335 if all the comparison results are positive, indicating the complete detection of a virus string.

3. Mask register 32 . Is fixed after initial loading through load mask bus 292, part of parameters bus 29, at power up. Like register 31, there are outputs at each stage, illustrated with mask bus latest value M0 326, mask bus i-th value Mi 327 represents one of the n stages in register 32, and mask bus earliest value Rn 328.

4. action register 34 holds a digital value indicating the type of action to take, which is related to the virus or event stored in register 31. The action may include Reset the CPU, Hold or only a warning to the controller 21 (see Fig. 3) of the supervisor processor. It is loaded through action bus 293, part of parameters bus 29, used to load the action parameters at power-up, from controller 21 (see Fig. 3).

Alarm/warning /action bus 28 is used to issue the alarm/warning if a suspect string or instruction was detected.

It is combined with similar bus from other comparator units (not shown) operating concurrently with that detailed in Fig. 4, and with their bus 28 connected in parallel to this one to form report alarm bus 241, to report to controller 21 that an alarm/warning or suspect activity took place.

Operation of the unit: This is a pipeline structure, with each instruction or sample of a long string being compared concurrently with all the other samples, using the comparator stages 331 ... 333. Thus, for each new instruction entered into register 22 from bus 17, that instruction together with the previous instructions, are compared with an instruction string pertaining to a virus or sensitive instruction stored in register 31, using mask in register 32.

The operation of the unit is synchronous, in that all the stages of register 22 are shifted at the same time, and the operation of the comparators is synchronized with that shift.

Thus, it was detailed how a string of bytes/ instructions are compared with a reference, by sliding the instructions intercepted from the PC busses past the fixed reference in register 31, using register 22.

What is compared, is shifted in SR 22 – only data or only instructions or also (optional) address or also (optional) control bus. Address information in register 22 allows to relate to specific address range, like interrupt vectors in RAM of PC, or to first instructions (from fixed address) after RESET.

Control information in register 22 allows to relate, or wait for specific instruction types, like only READ, or READ and I/O, or READ and MEMORY, or WRITE and I/O, or DMA, or other combinations.

Control of CPU in applications processor, examples for several CPUs:

1. For the Intel Model i486, or 80486, used in Personal Computers (PC) "compatibles":

RESET – the reset input forces the CPU to abandon all tasks, and restart from the beginning, as in power-up. Can be used where real danger is eminent, and no risks can be taken to preserve status or tasks in progress

HOLD – the hold input causes the CPU to float most of its output and input/output pins, thus allowing access to the supervisor to the address, control and data busses. That is, full control over the PC and its resources. After deactivating the HOLD signal, the CPU will continue its tasks as usual.

To float the outputs means that the outputs go into a tri-state or high impedance state, allowing other devices to control the logic state for the bits on the bus, either 1 or 0.

BOFF – the backoff input forces the CPU to float its bus in the next clock, having an effect similar to HOLD.

2. For the Intel Model Pentium, used in Personal Computers (PC) "compatibles":

RESET – the reset input forces the CPU to abandon all tasks, and restart from the beginning, as in power–up. Like in i486.

HOLD – the Hold Request input causes the CPU to float most of its output and input/output pins.

BOFF – the Back Off input forces the CPU to float its bus in the next clock, having an effect similar to HOLD.

BRDY – indicates that the external device is ready to transfer data.

3. For the Motorola Model 68020 CPU:

RESET – the reset input forces the CPU to abandon all tasks, and restart from the beginning, as in power–up.

HALT – this input stops all processor bus activity, and the bus is floated, to tri–state.

Mask bytes example, for Intel 8086/80486 family:

Structure of instruction "Jump within segment or group" :

Three bytes: Op Code, Disp Low , Disp High ;

Op Code= E9 hexa

Suppose that we aim to detect the "Jump" instruction, where the actual address is irrelevant. Maybe in different computers will load to different addresses. Then the first byte is enabled, and the next two bytes are completely disabled or masked out.

The result: any program including the "Jump" instruction of this type, with whatever parameters, will be detected reliably.

Mask bits example, for Intel 8086/80486 family:

Structure of instruction "Jump on condition" :

Two bytes: Op Code, Displacement ;

Op Code= 70 hexa Jump if overflow

Op Code= 71 hexa Jump if no overflow

Op Code= 72 hexa Jump if below

Op Code= 73 hexa Jump if above

Suppose we desire to detect all of these instructions with one comparator unit. The difference between the op codes is in the lowest two bits, (D1 D0) .

By using a mask 1111 1100 binary and an AND operation with the opcode, the lowest bits are masked out, to be always zero.

The masked opcode is the same for the four instructions, which can be detected with one comparator. Compare with 70 hexa.

If the displacement is irrelevant, then all its bits can be masked out as well (for example by performing AND with 0000 0000 binary).

Thus, means are detailed for the supervisor to detect viruses without slowing down the applications processor.

Fig. 5 details an embodiment of the comparator structure and operation. It details, for example, one embodiment of comparator 331, mentioned with reference to Fig. 4 above. Comparator 331 operates on busses C0 226, R0 316 and M0 326, each k bits wide latest output C0 226, the corresponding reference R0 316 and mask from bus M0 326.

Fig. 5 details the operations on one bit, say bit j. This is representative of the operation of the other bits as well.
One bit of the instruction C0(j) 412 is compared with one bit of the reference R0(j) 413, in XOR gate 41. It compares latest output C0 226 with corresponding reference R0 316, using AND mask from bus M0 326.

The comparison is bitwise, that is each of k bits of bus C0 226 is compared with a corresponding bit of bus R0 316, with mask bit from M0 326 being applied to allow or ignore the result, then all the partial bit results are collected to result in result 361.

The operations on one bit, say bit j, are detailed. This is representative of the operation of the other bits as well.
Thus, one bit of the instruction C0(j) 412 is compared with one bit of the reference R0(j) 413 in XOR gate 41. The output 414 of gate 41 is zero if the bits are equal (either both are 0 or both are 1 logic).
If the mask bit M0(j) 423 is HIGH or ENABLE, then AND gate 42 is transparent, so that its output 424 is identical to signal 414. Similarly, the other comparators (not shown) operate on the other bits of the busses C0, R0, M0 to issue the other input lines 425 to NOR gate 43.

If, and only if, all these input lines 424 and 425 are at ZERO state, then the output 361 of NOR gate 43 goes HIGH, indicating an ALARM or identity for that stage in comparison.

The above description relates to a bit for which the corresponding mask bit 423 is ENABLE, or M0(j)= HIGH. If the mask state is IGNORE or MASK, that is ZERO, then the output 424 of AND gate 42 is always ZERO, regardless of the result of the comparison in gate 41. Thus, the bit j is ignored and assumed equal to the reference, to allow the issuing of an ALARM if the other bits (those which are not ignored) are equal to the reference.

The result of comparison 361 at the output of NOR gate 43 is combined (not shown) with corresponding results from the other stages of comparison, to arrive at a decision regarding a specific virus pattern which is sought after.

The logic circuit of Fig. 5 and the corresponding explanation are just one embodiment of the bitwise comparison process.
Other embodiments will become apparent to persons in the art, like a PAL or FPLA or microcontrolled implementation to perform logical operation or a multiplexed comparison to perform sequential operation on the bits and/or the bytes or word of the relevant busses.

In another embodiment of the abovedetailed structure and method, a digital signal processor like the ANALOG DEVICES INC. DSP21000 family may be used to perform the bitwise logic and other functions as detailed above.

Fig. 6 details another structure of monitoring means, using digital signatures in lieu of direct comparison of all samples of an instruction string.

Data multiplexer and latches means 222 reads instructions from the input bus and generates instruction/data bus 223, which is transferred to comparator shift register 22, and thence to log shift register/FIFO 23. These registers shift all the time, to move the instructions past the comparation unit. The log shift register/FIFO output bus 231 is connected to the controller (not shown).

Thus, for example, register 22 outputs data bus latest output C0 226, and previous samples including data bus i–th output Ci 227 which represents one of the n stages in SR 22, and data bus earliest output Cn 228.

There are also a multitude of comparator units operating concurrently, each receiving the outputs from register 22 in parallel, and each including:

1. signature computing means 51, which receives a data bus 512 from SR 22 and a mask bus 513 from a register (not shown). The output is issued on the digital signature bus 515.

2. comparator 52, compares signature on bus 514 with reference of virus or other event, stored in signature reference register 53 . This is a fixed value, after initial loading. It is loaded through load signature reference bus 291, part of parameters bus 29.

The mask register (not shown) is serial or parallel, as known in the art. It is fixed after initial loading. An alarm strobe 335 is issued (active) if the signatures correspond, indicating the complete detection of a virus string. The alarm strobe 335 connects to an action register (not shown) similar to that in Fig. 4, or similar.

The comparator unit includes a plurality of such comparators, each with a signature computing means 51, comparator 52 and reference 53, and each issuing an alarm strobe 335.

Each may issue a different type of Alarm or Warning or Notice, as programmed by the controller (not shown) in the supervisor processor. All the comparators operate concurrently on the data/instructions supplied to all of them, in parallel, from SR 22.

Example of use of digital signatures:

Time to error – for 200 MHz clock, that is, one comparison and decision is performed each 5 nanoseconds interval.

Time to error: until the accumulated probability of error Pr is Pr=0.5. That is the probability for at least one error (the probability that not a single error occurred is too = 0.5), see Table 1.

Table 1

Number of bytes	Max. value 2^n	Probability of one error	Time to error, seconds	Time to error, years
2	65536	1.52E-05	1.63E-04	5.19E-12
3	1.67E+07	5.96E-08	4.19E-02	1.33E-09
4	4.29E+09	2.32E-10	11.	3.40E-07
5	1.09E+12	9.09E-13	2748.	8.71E-05
6	2.81E+14	3.55E-15	703687.	2.23E-02
7	7.20E+16	1.38E-17	1.80E+08	5.7
8	1.84E+19	5.42E-20	4.61E+10	1462.

Thus, using a signature of eight bytes, the 50% cumulative probability of error is achieved after continuous operation for 1,462 years, at a clock of 200 Megahertz. Thus signatures may be used to achieve a very reliable verification, while concurrently achieving a significant saving in cost and circuit complexity.

According to another aspect of the present invention, the supervisor includes a multisensor unit 27 which monitors everything going on, in and around the application processor, including (not shown) a plurality of sensors for sensing the various effects indicative of the presence of a virus.

The multisensor unit– monitors everything going on, including processor commands, I/O port activity, RS–232, modem/telephone output, ethernet, Internet, LAN, optical (visible/IR/UV), ultrasonic/sonic/subsonic, RF and microwaves, electrical and magnetic fields, disturbance on power line of 50 Hz or 60Hz. Its function: look everywhere, every medium is suspect; anything moving, bring in for inspection.

Part of the sensors are fixed, to continuously sense in and around the PC. Part of the sensors are portable, detachable, like a pen for example, so as to allow the user to bring it to suspect areas or busses.

Various implementations and other embodiments of the present invention will become apparent to persons skilled in the art upon reading the abovedetailed disclosure.

It will be recognized that the foregoing is but one example of an apparatus and method within the scope of the present invention and that various modifications will occur to those skilled in the art upon reading the disclosure set forth hereinbefore.

Claims

What is claimed is:

1. An antivirus protection system comprising a second processor attached to a first processor for monitoring its performance and intervening if predefined behaviour thereof is detected, wherein said second processor includes means for continuously supervising the operation of the first processor to detect virus-related activities therein by comparing actual performed instructions in the first processor with instruction sequences corresponding to known viruses or to predefined suspect behaviour therein, and to stop said activity in the first processor after its detection.

2. The antivirus system according to claim 1, further including means for protection from attack by virus in said first processor and including a separate computer and memory, which are independent from said processor.

3. The antivirus system according to claim 1, wherein said supervising means includes a combination of fast monitoring means in hardware, with smart verification means in a programmed device, with these means operating together to protect from known viruses as well as from unknown viruses according to their suspect behavior.

4. The antivirus system according to claim 1, further including a plurality of sensors to detect suspect activity in various media like radio frequency or wireless RF, serial or parallel communication channels, ultrasound, sonic or subsonic waves, power lines and/or optical media including infrared, visible light and/or ultraviolet.

5. An antivirus multiprocessor system comprising a first processor for performing application programs and a second processor for continuously supervising the operation of the first, wherein said second processor is connected to the bus of said first processor and includes means to monitor activity of the first processor to detect virus-related activities therein by comparing actual performed instructions in the first processor with instruction sequences corresponding to known viruses or to predefined suspect behaviour therein, and to stop said activity in the first processor after its detection.

6. The antivirus system according to claim 5, further including means for protection from attack by virus in the first processor and including a separate computer and memory, which are independent from said processor.

7. The antivirus system according to claim 5, wherein said supervising means includes a combination of fast monitoring means in hardware, with smart verification means in a programmed device, with these means operating together to protect from known viruses as well as from unknown viruses according to their suspect behavior.

8. The antivirus system according to claim 5, further including a plurality of sensors to detect suspect activity in various media like radio frequency or wireless Rf, ultrasound, sonic or subsonic waves, power lines and/or optical media including infrared, visible light and/or ultraviolet.

9. In a multiprocessor system, an antivirus protection method including the steps of:

A. connecting a second processor to a first applications processor;

B. using the second processor to continuously monitor the activities performed on the first processor and to compare to predefined forbidden activities; and

C. when the second processor detects a forbidden activity taking place in the first processor, then the second processor takes predefined actions to prevent damage to the second or applications processor.

10. The antivirus protection method according to claim 9, further including in step (B) the monitoring by the second processsor of a multisensor unit connected thereto.

11. The antivirus protection method according to claim 10, wherein the multisensor unit includes a plurality of sensors to detect suspect activity in various media like radio frequency or wireless Rf, ultrasound, sonic or subsonic waves, power lines and/or optical media including infrared, visible light and/or ultraviolet.

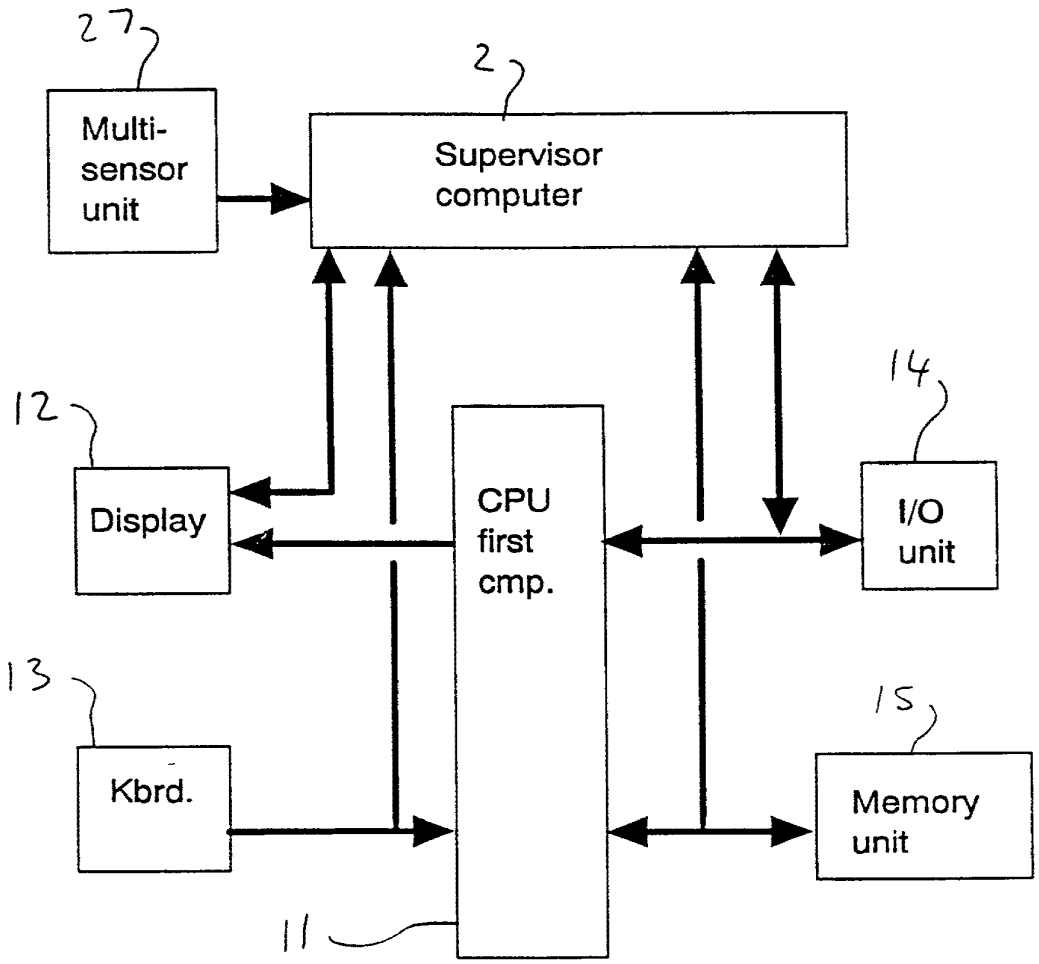
27
Multi-
sensor
unit
2
Supervisor
computer
12
Display
CPU
first
cmp.
14
I/O
unit
13
Kbrd.
15
Memory
unit
11

Fig. 1

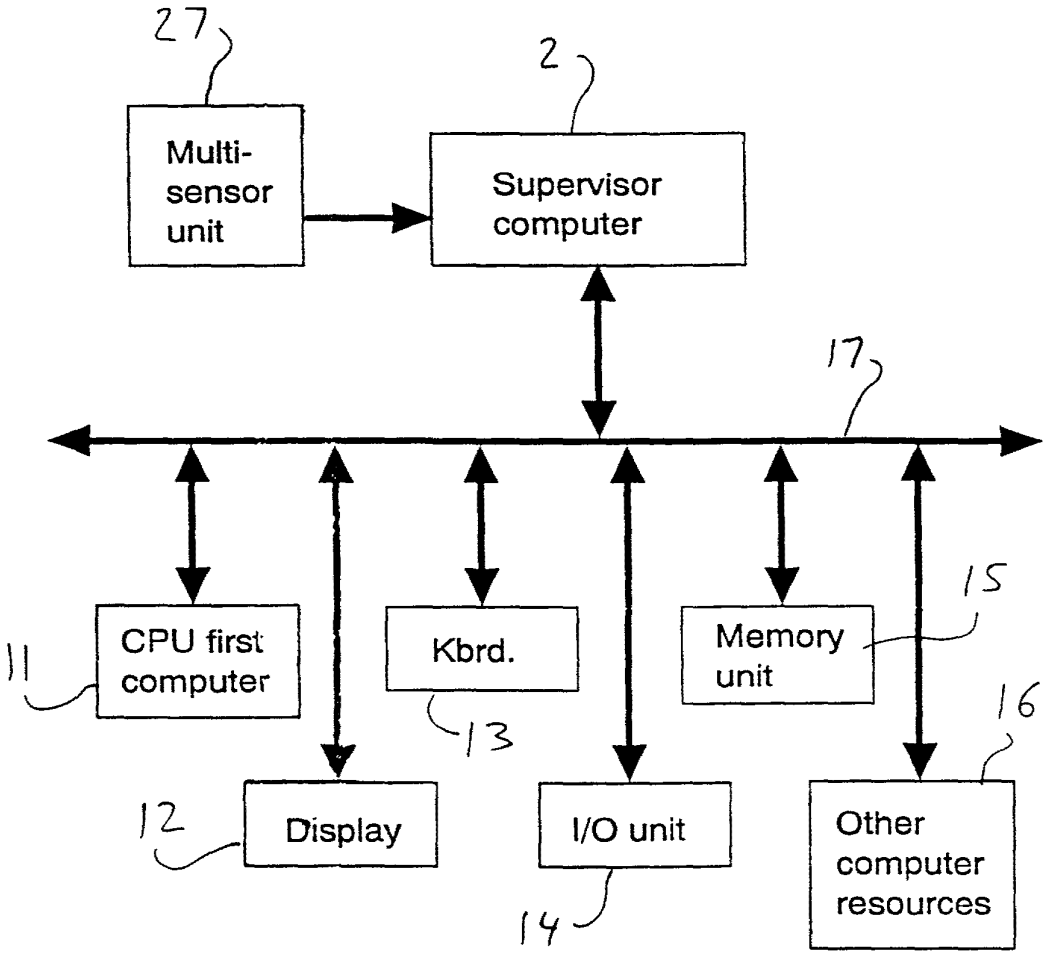
27
Multi-sensor unit
2
Supervisor computer
17
11
CPU first computer
Kbrd.
13
Memory unit
15
16
12
Display
I/O unit
14
Other computer resources

Fig. 2

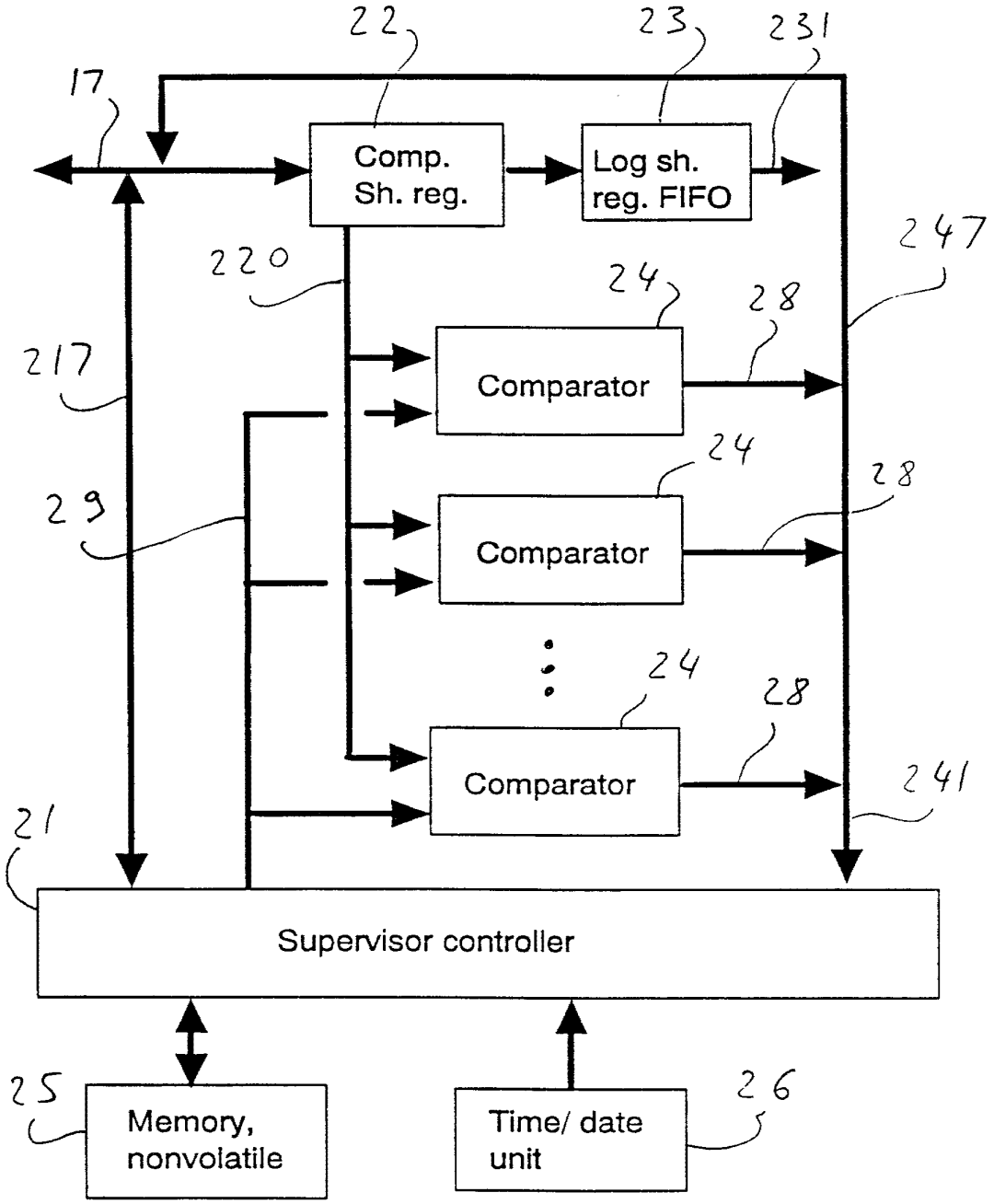
22
23
231
17
Comp.
Sh. reg.
Log sh.
reg. FIFO
247
220
24
28
217
Comparator
24
28
29
Comparator
24
28
Comparator
241
21
Supervisor controller
25
Memory,
nonvolatile
Time/ date
unit
26

Fig. 3

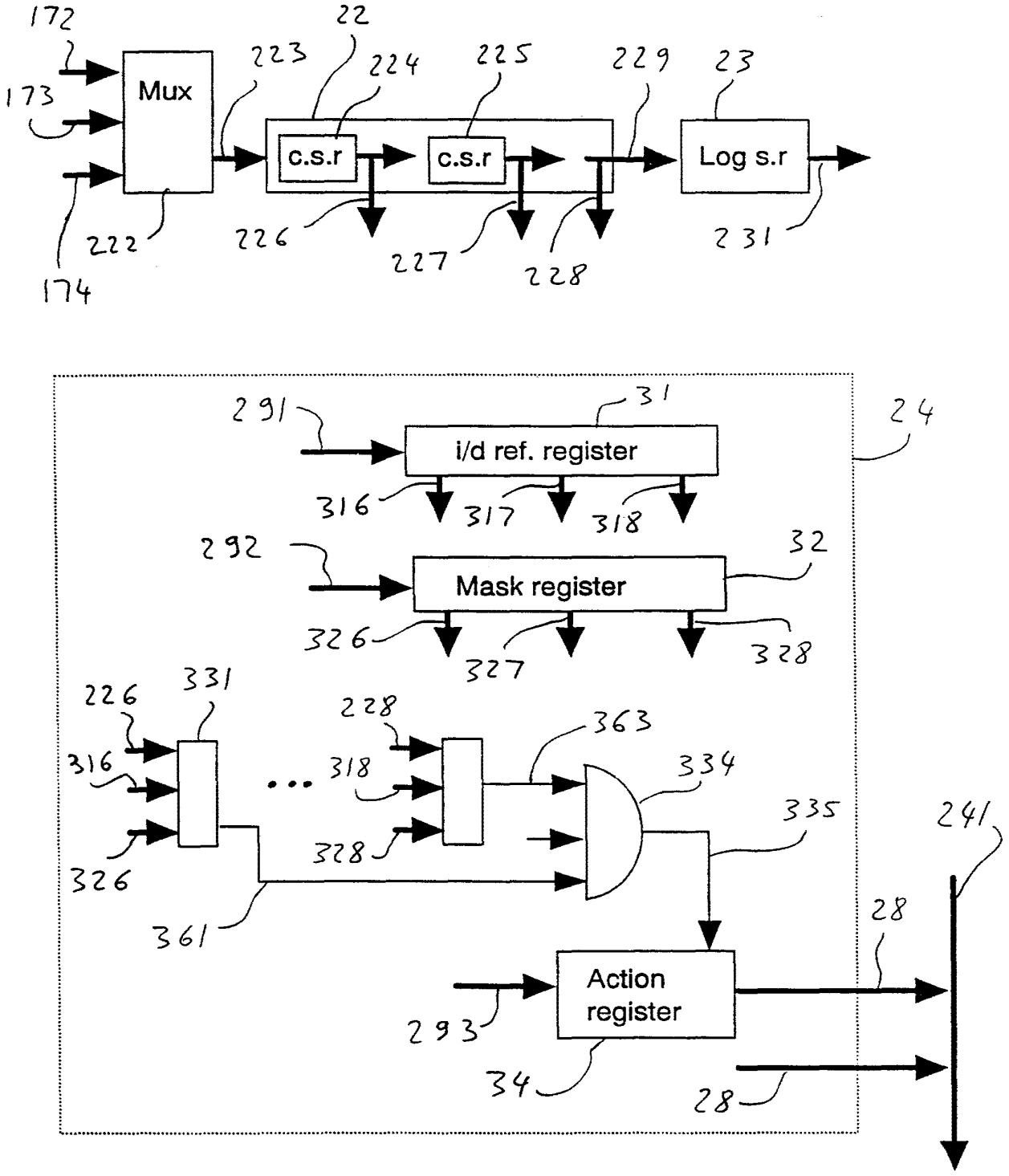
172
173
174
Mux
222
223
22
224
225
c.s.r
c.s.r
226
227
228
229
23
Log s.r
231
24
291
31
i/d ref. register
316
317
318
292
32
Mask register
326
327
328
226
331
316
326
361
228
318
328
363
334
335
241
28
Action register
293
34
28

Fig. 4

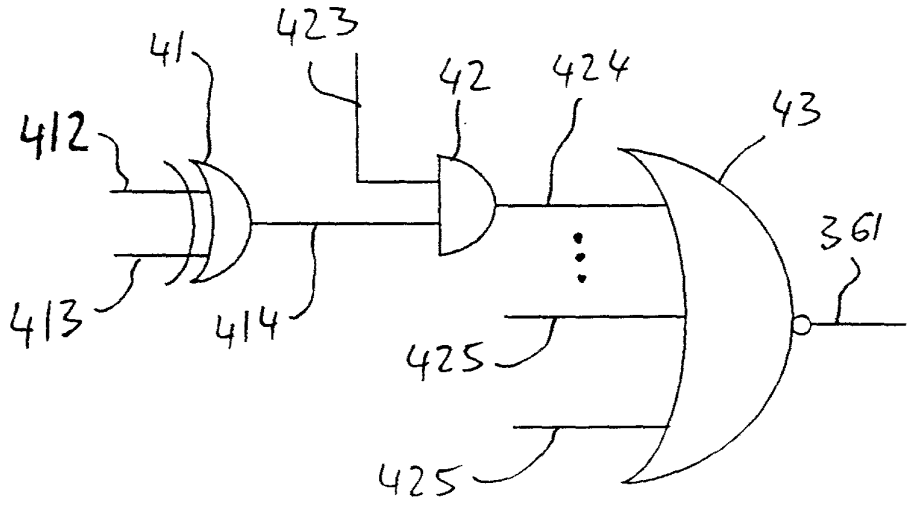

Fig. 5

Sophos Ex. 1014
Page 253 of 423

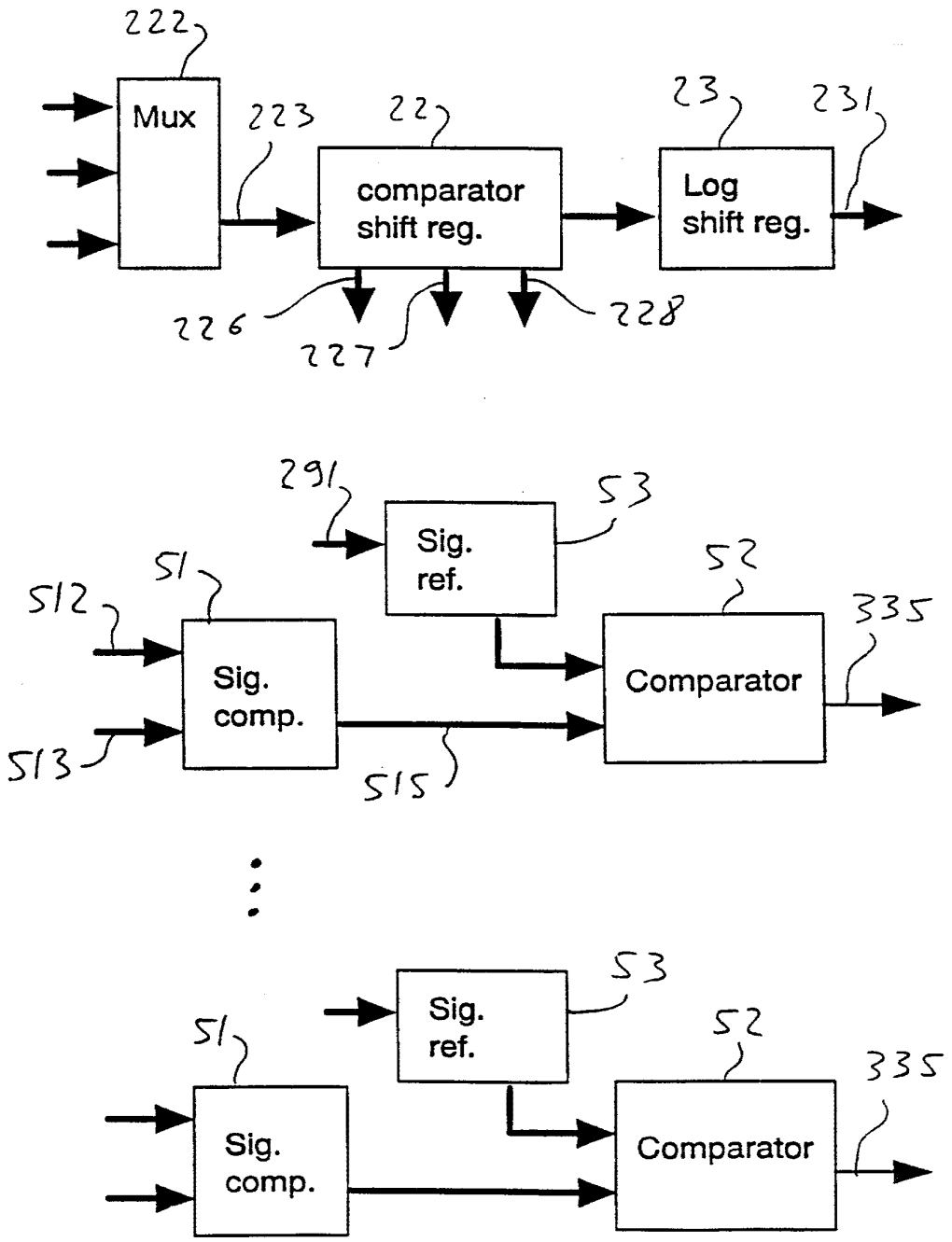
222
Mux
223
22
comparator
shift reg.
23
231
Log
shift reg.
226
227
228
291
53
Sig.
ref.
51
512
52
335
Sig.
comp.
Comparator
513
515
53
Sig.
ref.
51
52
335
Sig.
comp.
Comparator

Fig. 6

IN THE UNITED STATES PATENT AND TRADEMARK OFFICE

In Re Application of:	Matthew L. BONEY	Confirmation No.:	8009
Serial No.:	11/408,146	Group Art Unit:	2154
Filed:	04/20/2006	Examiner:	Not yet assigned

FOR: **BACKWARDS RESEARCHING ACTIVITY INDICATIVE OF PESTWARE**

Mail Stop Amendment
Commissioner for Patents
P.O. Box 1450
Alexandria, VA 22313-1450

INFORMATION DISCLOSURE STATEMENT UNDER 37 C.F.R. §1.97(b)

In accordance with the duty of disclosure set forth in 37 C.F.R. §1.56, Applicant(s) hereby submits the following information in conformance with 37 C.F.R. §§1.97 and 1.98.

[x] Pursuant to 37 C.F.R. §1.98, a copy of each non-US patent document cited in the attached Form PTO/SB/08 is enclosed.

[x] No copies of any U.S. patents or U.S. patent application publications listed on the attached Form PTO/SB/08 are being provided pursuant to 37 C.F.R. §1.98.

This Information Disclosure Statement is filed within any one of the following time periods:

[] within three months from the filing date of this national application other than a CPA under 37 C.F.R. § 1.53(d);

[] within three months from the date of entry of the national stage as set forth in 37 C.F.R. §1.491 in this international application;

[x] before the mailing date of a first office action on the merits; or

[] before the mailing of a first office action after the filing of a request for continued examination under 37 C.F.R. § 1.114.

It is respectfully requested that the Examiner consider the above-noted information and return an initialed copy of the attached Form PTO/SB/08 to the undersigned.

COOLEY GODWARD KRONISH LLP
ATTN: Patent Group
777 6th Street NW, Suite 1100
Washington, DC 20001

Tel: (720) 566-4044
Fax: (202) 842-7899

Respectfully submitted,
COOLEY GODWARD KRONISH LLP

By: Thomas M. Croft
Thomas M. Croft
Reg. No. 44,051

Please type a plus sign (+) inside this box → +

PTO/SB/08A (07-05)
Approved for use through 07/31/2006. OMB 0651-0031

Substitute for form 1449A/PTO		Complete if Known	
INFORMATION DISCLOSURE STATEMENT BY APPLICANT		Application Number	11/408,146
		Filing Date	04/20/2006
		First Named Inventor	Matthew L. BONEY
		Group Art Unit	2154
(use as many sheets as necessary)		Examiner Name	Not yet assigned
Sheet	1 of 1	Attorney Docket Number	WEBR-044/00US 303666-2049

U.S. PATENT DOCUMENTS

Examiner Initials*	Cite No.[1]	Document Number Number-Kind Code[2] (*if known*)	Publication Date MM-DD-YYYY	Name of Patentee or Applicant of Cited Document	Pages, Columns, Lines, Where Relevant Passages or Relevant Figures Appear
		US-2002/0162017-A1	10-31-2002	Sorkin	
		US-2004/0024864-A1	02-05-2004	Porras	
		US-2005/0005160-A1	01-06-2005	Bates	

FOREIGN PATENT DOCUMENTS

Examiner Initials*	Cite No.[1]	Foreign Patent Document Country Code[3] Number[4] Kind Code[5] (if known)	Publication Date MM-DD-YYYY	Name of Patentee or Applicant of Cited Document	Pages, Columns, Lines, Where Relevant Passages or Relevant Figures Appear	T[2]
		PCT/US2006/025378	09-18-2007	Piccard	Search Report and Written Opinion	
		PCT/US2007/067078	11-02-2007	Boney	Search Report and Written Opinion	
		PCT/US2007/067084	11-05-2007	Boney	Search Report and Written Opinion	
		PCT/US2006/041798	12-04-2007	Wilson	Search Report and Written Opinion	

Examiner Signature		Date Considered	

*EXAMINER: Initial if reference considered, whether or not citation is in conformance with MPEP 609. Draw line through citation if not in conformance and not considered. Include copy of this form with next communication to applicant. [1]Unique citation designation number (optional). [2]See attached Kinds of U.S. Patent Documents. [3]Enter Office that issued the document, by the two-letter code (WIPO Standard ST.3). [4]For Japanese patent documents, the indication of the year of the reign of the Emperor must precede the serial number of the patent document. [5]Kind of document by the appropriate symbols as indicated on the document under WIPO Standard ST.16 if possible. [6]Applicant is to place a check mark here if English language Translation is attached.

This collection of information is required by 37 CFR 1.97 and 1.98. The information is required to obtain or retain a benefit by the public which is to file (and by the USPTO to process) an application. Confidentiality is governed by 35 U.S.C. 122 and 37 CFR 1.14. This collection is estimated to take 2 hours to complete, including gathering, preparing, and submitting the completed application form to the USPTO. Time will vary depending upon the individual case. Any comments on the amount of time you require to complete this form and/or suggestions for reducing this burden, should be sent to the Chief Information Officer, U.S. Patent and Trademark Office, U.S. Department of Commerce, P.O. Box 1450, Alexandria, VA 22313-1450. DO NOT SEND FEES OR COMPLETED FORMS TO THIS ADDRESS. **SEND TO: Commissioner for Patents, P.O. Box 1450, Alexandria, VA 22313-1450.**

If you need assistance in completing the form, call 1-800-PTO-9199 and select option 2.

PATENT COOPERATION TREATY

3036606-2010

From the INTERNATIONAL SEARCHING AUTHORITY

To:
SEAN R. O'DOWD
COOLEY GODWARD, LLP
ATTN: PATENT GROUP
THE BOWEN BUILDING
875 15TH STREET, NW, SUITE 800
WASHINGTON, DC 20005-2221

PCT

NOTIFICATION OF TRANSMITTAL OF THE INTERNATIONAL SEARCH REPORT AND THE WRITTEN OPINION OF THE INTERNATIONAL SEARCHING AUTHORITY, OR THE DECLARATION

(PCT Rule 44.1)

	Date of mailing (*day/month/year*)
Applicant's or agent's file reference WEBR01700WO	**FOR FURTHER ACTION** See paragraphs 1 and 4 below
International application No. PCT/US06/25378	International filing date (*day/month/year*) 29 June 2006 (29.06.2006)
Applicant WEBROOT SOFTWARE, INC.	

1. ☒ The applicant is hereby notified that the international search report and the written opinion of the International Searching Authority have been established and are transmitted herewith.

Filing of amendments and statement under Article 19:
The applicant is entitled, if he so wishes, to amend the claims of the international application (see Rule 46):

When? The time limit for filing such amendments is normally twomonths from the date of transmittal of the international search report.

Where? Directly to the International Bureau of WIPO, 34 chemin des Colombettes 1211 Geneva 20, Switzerland, Facsimile No.: (41-22) 338.82.70.

For more detailed instructions, see the notes on the accompanying sheet.

2. ☐ The applicant is hereby notified that no international search report will be established and that the declaration under Article 17(2)(a) to that effect and the written opinion of the International Searching Authority are transmitted herewith.

3. ☐ **With regard to the protest** against payment of (an) additional fee(s) under Rule 40.2, the applicant is notified that:

☐ the protest together with the decision thereon has been transmitted to the International Bureau together with the applicant's request to forward the texts of both the protest and the decision thereon to the designated Offices.

☐ no decision has been made yet on the protest; theapplicant will be notified as soon as a decision is made.

4. **Reminders**

Shortly after the expiration of **18 months** from the priority date, the international application will be published by the International Bureau. If the applicant wishes to avoid or postpone publication, a notice of withdrawal of the international application, or of the priority claim, must reach the International Bureau as provided in Rules 90*bis*.1 and 90*bis*.3, respectively, before the completion of the technical preparations for international publication.

The applicant may submit comments on an informal basis on the written opinion of the International Searching Authority to the International Bureau. The International Bureau will send a copy of such comments to all designated Offices unless an international preliminary examination report has been or is to be established. These comments would also be made available to the public but not before the expiration of 30 months from the priority date.

Within **19 months** from the priority date, but only in respect of some designated Offices, a demand for international preliminary examination must be filed if the applicant wishes to postpone the entry into the national phase **until 30 months** from the priority date (in some Offices even later); otherwise, the applicant must, **within 20 months** from the priority date, perform the prescribed acts for entry into the national phase before those designated Offices.

In respect of other designated Offices, the time limit of**30 months** (or later) will apply even ifno demand is filed within 19 months.

See the Annex to Form PCT/IB/301 and, for details about the applicable time limits, Office by Office, see the *PCT Applicant's Guide*, Volume II, National Chapters and the WIPO Internet site.

Name and mailing address ofthe ISA/ US Mail Stop PCT, Attn: ISA/US Commissioner for Patents P.O. Box 1450 Alexandria, Virginia 22313-1450 Facsimile No. (571) 273-3201	Authorized officer Nasser Moazzami Jean Proctor Paralegal Specialist Telephone No. (571)272-2100

Form PCT/ISA/220 (January 2004) *(See notes on accompanying sheet)*

RECEIVED
SEP 24 2007
COOLEY GODWARD KRONISH LLP

ENTERED
DUE: ~~Written Opinion~~ 12/18/07
EOL: Abstract 10/18/07
Article 19 Amendment 11/18/07

PATENT COOPERATION TREATY

From the INTERNATIONAL SEARCHING AUTHORITY

To:
SEAN R. O'DOWD
COOLEY GODWARD, LLP
ATTN: PATENT GROUP
THE BOWEN BUILDING
875 15TH STREET, NW, SUITE 800
WASHINGTON, DC 20005-2221

PCT

NOTIFICATION OF TRANSMITTAL OF THE INTERNATIONAL SEARCH REPORT AND THE WRITTEN OPINION OF THE INTERNATIONAL SEARCHING AUTHORITY, OR THE DECLARATION

(PCT Rule 44.1)

	Date of mailing (*day/month/year*) 18 SEP 2007
Applicant's or agent's file reference WEBR01700WO	**FOR FURTHER ACTION** See paragraphs 1 and 4 below
International application No. PCT/US06/25378	International filing date (*day/month/year*) 29 June 2006 (29.06.2006)
Applicant WEBROOT SOFTWARE, INC.	

1. ☒ The applicant is hereby notified that the international search report and the written opinion of the International Searching Authority have been established and are transmitted herewith.

Filing of amendments and statement under Article 19:
The applicant is entitled, if he so wishes, to amend the claims of the international application (see Rule 46):

When? The time limit for filing such amendments is normally twomonths from the date of transmittal of the international search report.

Where? Directly to the International Bureau of WIPO, 34 chemin des Colombettes 1211 Geneva 20, Switzerland, Facsimile No.: (41-22) 338.82.70.

For more detailed instructions, see the notes on the accompanying sheet.

2. ☐ The applicant is hereby notified that no international search report will be established and that the declaration under Article 17(2)(a) to that effect and the written opinion of the Intenational Searching Authority are transmitted herewith.

3. ☐ **With regard to the protest** against payment of (an) additional fee(s) under Rule 40.2, the applicant is notified that:

☐ the protest together with the decision thereon has been transmitted to the International Bureau together with the applicant's request to forward the texts of both the protest and the decision thereon to the designated Offices.

☐ no decision has been made yet on the protest; theapplicant will be notified as soon as a decision is made.

4. **Reminders**

Shortly after the expiration of **18 months** from the priority date, the international application will be published by the International Bureau. If the applicant wishes to avoid or postpone publication, a notice of withdrawal of the international application, or of the priority claim, must reach the International Bureau as provided in Rules 90*bis*.1 and 90*bis*.3, respectively, before the completion of the technical preparations for international publication.

The applicant may submit comments on an informal basis on the written opinion of the International Searching Authority to the International Bureau. The International Bureau will send a copy of such comments to all designated Offices unless an international preliminary examination report has been or is to be established. These comments would also be made available to the public but not before the expiration of 30 months from the priority date.

Within **19 months** from the priority date, but only in respect of some designated Offices, a demand for international preliminary examination must be filed if the applicant wishes to postpone the entry into the national phase **until 30 months** from the priority date (in some Offices even later); otherwise, the applicant must, **within 20 months** from the priority date, perform the prescribed acts for entry into the national phase before those designated Offices.

In respect of other designated Offices, the time limit of**30 months** (or later) will apply even ifno demand is filed within 19 months.

See the Annex to Form PCT/IB/301 and, for details about the applicable time limits, Office by Office, see the *PCT Applicant's Guide*, Volume II, National Chapters and the WIPO Internet site.

Name and mailing address ofthe ISA/ US Mail Stop PCT, Attn: ISA/US Commissioner for Patents P.O. Box 1450 Alexandria, Virginia 22313-1450 Facsimile No. (571) 273-3201	Authorized officer Nasser Moazzami Jean Proctor Paralegal Specialist Telephone No. (571)272-2100

Form PCT/ISA/220 (January 2004) (*See notes on accompanying sheet*)

PATENT COOPERATION TREATY

PCT

INTERNATIONAL SEARCH REPORT

(PCT Article 18 and Rules 43 and 44)

Applicant's or agent's file reference WEBR01700WO	**FOR FURTHER ACTION** see Form PCT/ISA/220 as well as, where applicable, item 5 below	
International application No. PCT/US06/25378	International filing date (*day/month/year*) 29 June 2006 (29.06.2006)	(Earliest) Priority Date (*day/month/year*) 30 June 2005 (30.06.2005)
Applicant WEBROOT SOFTWARE, INC.		

This international search report has been prepared by this International Searching Authority and is transmitted to the applicant according to Article 18. A copy is being transmitted to the International Bureau.

This international search report consists of a total of 2 sheets.

☒ It is also accompanied by a copy of each prior art document cited in this report.

1. **Basis of the Report**
   a. With regard to the **language**, the international search was carried out on the basis of:
      ☒ the international application in the language in which it was filed.
      ☐ a translation of the international application into _____, which is the language of a translation furnished for the purposes of international search (Rules 12.3(a) and 23.1(b))
   b. ☐ With regard to any **nucleotide and/or amino acid sequence** disclosed in the international application, see Box No. I.
2. ☐ **Certain claims were found unsearchable** (See Box No. II)
3. ☐ **Unity of invention is lacking** (See Box No. III)
4. With regard to the **title**,
   ☒ the text is approved as submitted by the applicant.
   ☐ the text has been established by this Authority to read as follows:
5. With regard to the **abstract**,
   ☒ the text is approved as submitted by the applicant.
   ☐ the text has been established, according to Rule 38.2(b), by this Authority as it appears in Box No. IV. The applicant may, within one month from the date of mailing of this international search report, submit comments to this Authority.
6. With regard to the **drawings**,
   a. the figure of the **drawings** to be published with the abstract is Figure No. 1
      ☒ as suggested by the applicant.
      ☐ as selected by this Authority, because the applicant failed to suggest a figure.
      ☐ as selected by this Authority, because this figure better characterizes the invention.
   b. ☐ none of the figures is to be published with the abstract.

INTERNATIONAL SEARCH REPORT

International application No.
PCT/US06/25378

A. CLASSIFICATION OF SUBJECT MATTER
IPC: **G06F 12/14**(2006.01)

USPC: 726/24
According to International Patent Classification (IPC) or to both national classification and IPC

B. FIELDS SEARCHED

Minimum documentation searched (classification system followed by classification symbols)
U.S. : 726/24

Documentation searched other than minimum documentation to the extent that such documents are included in the fields searched
ACM/IEEE?Springer/Altavista/Google/Scholar/Archive

Electronic data base consulted during the international search (name of data base and, where practicable, search terms used)

C. DOCUMENTS CONSIDERED TO BE RELEVANT

Category *	Citation of document, with indication, where appropriate, of the relevant passages	Relevant to claim No.
X,P	US 2006/0075468 A1 (BONEY et al) 6 April 2006 (06.04.2006)	1-18
X	US 6,785,732 B1 (BATES et al) 31 August 2004 (31.08.2004)	1-18
X	US 2005/0005160 A1 (BATES et al) 6 January 2005 (06.01.2005)	1-18
X,P	US 2006/0080637 A1 (TREIT et al) 13 April 2006 (13.04.2006)	1-18

☐ Further documents are listed in the continuation of Box C. ☐ See patent family annex.

* Special categories of cited documents:

"A" document defining the general state of the art which is not considered to be of particular relevance

"E" earlier application or patent published on or after the international filing date

"L" document which may throw doubts on priority claim(s) or which is cited to establish the publication date of another citation or other special reason (as specified)

"O" document referring to an oral disclosure, use, exhibition or other means

"P" document published prior to the international filing date but later than the priority date claimed

"T" later document published after the international filing date or priority date and not in conflict with the application but cited to understand the principle or theory underlying the invention

"X" document of particular relevance; the claimed invention cannot be considered novel or cannot be considered to involve an inventive step when the document is taken alone

"Y" document of particular relevance; the claimed invention cannot be considered to involve an inventive step when the document is combined with one or more other such documents, such combination being obvious to a person skilled in the art

"&" document member of the same patent family

Date of the actual completion of the international search
02 August 2007 (02.08.2007)

Date of mailing of the international search report
18 SEP 2007

Name and mailing address of the ISA/US
Mail Stop PCT, Attn: ISA/US
Commissioner for Patents
P.O. Box 1450
Alexandria, Virginia 22313-1450
Facsimile No. (571) 273-3201

Authorized officer
Nasser Moazzami
Telephone No. (571)272-2100

Jean Proctor
Paralegal Specialist

Form PCT/ISA/210 (second sheet) (April 2005)

PATENT COOPERATION TREATY

From the
INTERNATIONAL SEARCHING AUTHORITY

To:
SEAN R. O'DOWD
COOLEY GODWARD, LLP
ATTN: PATENT GROUP
THE BOWEN BUILDING
875 15TH STREET, NW, SUITE 800
WASHINGTON, DC 20005-2221

PCT

WRITTEN OPINION OF THE
INTERNATIONAL SEARCHING AUTHORITY

(PCT Rule 43*bis*.1)

Date of mailing (*day/month/year*)	18 SEP 2007
Applicant's or agent's file reference WEBR01700WO	**FOR FURTHER ACTION** See paragraph 2 below

International application No.	International filing date (*day/month/year*)	Priority date (*day/month/year*)
PCT/US06/25378	29 June 2006 (29.06.2006)	30 June 2005 (30.06.2005)

International Patent Classification (IPC) or both national classification and IPC

IPC: **G06F 12/14**(2006.01)
USPC: 726/24

Applicant

WEBROOT SOFTWARE, INC.

1. This opinion contains indications relating to the following items:

- [x] Box No. I — Basis of the opinion
- [ ] Box No. II — Priority
- [ ] Box No. III — Non-establishment of opinion with regard to novelty, inventive step and industrial applicability
- [ ] Box No. IV — Lack of unity of invention
- [x] Box No. V — Reasoned statement under Rule 43*bis*.1(a)(i) with regard to novelty, inventive step or industrial applicability; citations and explanations supporting such statement
- [ ] Box No. VI — Certain documents cited
- [ ] Box No. VII — Certain defects in the international application
- [ ] Box No. VIII — Certain observations on the international application

2. **FURTHER ACTION**

If a demand for international preliminary examination is made, this opinion will be considered to be a written opinion of the International Preliminary Examining Authority ("IPEA") except that this does not apply where the applicant chooses an Authority other than this one to be the IPEA and the chosen IPEA has notified the International Bureau under Rule 66.1*bis(b)* that written opinions of this International Searching Authority will not be so considered.

If this opinion is, as provided above, considered to be a written opinion of the IPEA, the applicant is invited to submit to the IPEA a written reply together, where appropriate, with amendments, before the expiration of 3 months from the date of mailing of Form PCT/ISA/220 or before the expiration of 22 months from the priority date, whichever expires later.

For further options, see Form PCT/ISA/220.

3. For further details, see notes to Form PCT/ISA/220.

Name and mailing address of the ISA/ US	Date of completion of this opinion	Authorized officer
Mail Stop PCT, Attn: ISA/US Commissioner for Patents P.O. Box 1450 Alexandria, Virginia 22313-1450 Facsimile No. (571) 273-3201	11 August 2007 (11.08.2007)	Nasser Moazzami Jean Proctor Paralegal Specialist Telephone No. (571)272-2100

Form PCT/ISA/237 (cover sheet) (April 2005)

WRITTEN OPINION OF THE INTERNATIONAL SEARCHING AUTHORITY

International application No.
PCT/US06/25378

Box No. I Basis of this opinion

1. With regard to the **language**, this opinion has been established on the basis of:

☒ the international application in the language in which it was filed

☐ a translation of the international application into _____, which is the language of a translation furnished for the purposes of international search (Rules 12.3(a) and 23.1(b)).

2. With regard to any **nucleotide and/or amino acid sequence** disclosed in the international application and necessary to the claimed invention, this opinion has been established on the basis of:

a. type of material

☐ a sequence listing

☐ table(s) related to the sequence listing

b. format of material

☐ on paper

☐ in electronic form

c. time of filing/furnishing

☐ contained in the international application as filed.

☐ filed together with the international application in electronic form.

☐ furnished subsequently to this Authority for the purposes of search.

3. ☐ In addition, in the case that more than one version or copy of a sequence listing and/or table(s) relating thereto has been filed or furnished, the required statements that the information in the subsequent or additional copies is identical to that in the application as filed or does not go beyond the application as filed, as appropriate, were furnished.

4. Additional comments:

Box No. V Reasoned statement under Rule 43 *bis*.1(a)(i) with regard to novelty, inventive step or industrial applicability; citations and explanations supporting such statement

1. Statement

Novelty (N)	Claims	NONE	YES
	Claims	1-18	NO
Inventive step (IS)	Claims	NONE	YES
	Claims	1-18	NO
Industrial applicability (IA)	Claims	1-18	YES
	Claims	NONE	NO

2. Citations and explanations:

Please See Continuation Sheet

Supplemental Box
In case **the space in any of the preceding boxes is not sufficient.**

V. 2. Citations and Explanations:
Claims 1-18 lack novelty under PCT Article 33(2) as being anticipated by Bates et al (US Patent 6,785,732, hereinafter Bates).

Regarding claim 1, Bates teaches a method of identifying a malware distribution site, comprising: analyzing a file to determine that the file includes potential malware (abstract); searching a download history log to identify a Web site from which the file was downloaded (abstract); and generating an indication that the Web site corresponds to a potential malware distribution site (abstract, col. 3, lines 35-67, col. 6, lines 1-40).

Regarding claim 7, Bates teaches a computer-readable medium comprising executable instructions to: compare a file with a set of malware definitions; based on determining that the file matches one of the set of malware definitions, determine a Web address from which the file was received; and generate an indication that the Web address is associated with malware (abstract, col. 3, lines 35-67, col. 6, lines 1-40).

Regarding claim 13, Bates teaches a system of managing malware, comprising: a malware detection module configured to analyze a file of a protected computer to determine that the file is associated with malware; and a Web site identification module configured to search a download history log of the protected computer to identify a Web site from which the file was downloaded (abstract, col. 3, lines 35-67, col. 6, lines 1-40).

Regarding claim 2, Bates teaches wherein the analyzing the file includes determining that the file matches one of a set of malware definitions (col. 12, lines 1-60).

Regarding claims 3, 10, and 14, Bates teaches wherein the download history log corresponds to a Web browser's history log (abstract, col. 6, lines 1-40).

Regarding claims 4, 11, and 15, Bates teaches generating the download history log based on a Web browser's history log (abstract, col. 6, lines 1-40).

Regarding claims 5 and 9, Bates teaches wherein the searching the download history log includes searching the download history log to identify a Web address associated with the Web site (abstract, col. 6, lines 1-40).

Supplemental Box
In case **the space in any of the preceding boxes is not sufficient**.

Regarding claims 6 and 18, Bates teaches wherein the analyzing the file, the searching the download history log, and the generating the indication are performed at a protected computer, the method further comprising: directing the protected computer to convey the indication to a remotely-located computer (abstract, col. 6, lines 1-40).

Regarding claim 8, Bates teaches wherein the executable instructions to compare the file with the set of malware definitions include executable instructions to compare a hash value of the file with a set of hash values of malware (col. 12, lines 1-60).

Regarding claim 12, Bates teaches wherein the Web address corresponds to a Universal Resource Locator associated with a Web site (abstract, col. 6, lines 1-40).

Regarding claim 16, Bates teaches wherein the Web site identification module is configured to search the download history log to identify a Universal Resource Locator associated with the Web site (abstract, col. 6, lines 1-40).

Regarding claim 17, Bates teaches a reporting module configured to generate an indication that the Web site corresponds to a potential malware distribution site (col. 11, lines 5-67).

NOTES TO FORM PCT/ISA/220

These Notes are intended to give the basic instructions concerning the filing of amendments under Article 19. The Notes are based on the requirements of the Patent Cooperation Treaty, the Regulations and the Administrative Instructions under that Treaty. In case of discrepancy between these Notes and those requirements, the latter are applicable. For more detailed information, see also the *PCT Applicant's Guide*, a publication of WIPO.

In these Notes, "Article," "Rule" and "Section" refer to the provisions of the PCT, the PCT Regulations and the PCT Administrative Instructions, respectively.

INSTRUCTIONS CONCERNING AMENDMENTS UNDER ARTICLE 19

The applicant has, after having received the international search report and the written opinion of the International Searching Authority, one opportunity to amend the claims of the international application. It should however be emphasized that, since all parts of the international application (claims, description and drawings) may be amended during the international preliminary examination procedure, there is usually no need to file amendments of the claims under Article 19 except where, e.g. the applicant wants the latter to be published for the purposes of provisional protection or has another reason for amending the claims before international publication. Furthermore, it should be emphasized that provisional protection is available in some States only (see *PCT Applicant's Guide*, Volume I/A, Annexes B1 and B2).

The attention of the applicant is drawn to the fact that amendments to the claims under Article 19 are not allowed where the International Searching Authority has declared, under Article 17(2), that no international search report would be established (see *PCT Applicant's Guide*, Volume I/A, paragraph 296).

What parts of the international application may be amended ?

Under Article 19, only the claims may be amended.

During the international phase, the claims may also be amended (or further amended) under Article 34 before the International Preliminary Examining Authority. The description and drawings may only be amended under Article 34 before the International Preliminary Examining Authority.

Upon entry into the national phase, all parts of the international application may be amended under Article 28 or, where applicable, Article 41.

When ? Within 2 months from the date of transmittal of the international search report or 16 months from the priority date, whichever time limit expires later. It should be noted, however, that the amendments will be considered as having been received on time if they are received by the International Bureau after the expiration of the applicable time limit but before the completion of the technical preparations for international publication (Rule 46.1).

Where not to file the amendments ?

The amendments may only be filed with the International Bureau and not with the receiving Office or the International Searching Authority (Rule 46.2).

Where a demand for international preliminary examination has been/is filed, see below.

How ? Either by cancelling one or more entire claims, by adding one or more new claims or by amending the text of one or more of the claims as filed.

A replacement sheet must be submitted for each sheet of the claims which, on account of an amendment or amendments, differs from the sheet originally filed.

All the claims appearing on a replacement sheet must be numbered in Arabic numerals. Where a claim is cancelled, no renumbering of the other claims is required. In all cases where claims are renumbered, they must be renumbered consecutively (Section 205(b)).

The amendments must be made in the language in which the international application is to be published.

What documents must/may accompany the amendments ?

Letter (Section 205(b)):

The amendments must be submitted with a letter.

The letter will not be published with the international application and the amended claims. It should not be confused with the "Statement under Article 19(1)" (see below, under "Statement under Article 19(1)").

The letter must be in English or French, at the choice of the applicant. However, if the language of the international application is English, the letter must be in English; if the language of the international application is French, the letter must be in French.

Sophos Ex. 1014
Page 267 of 423

PATENT COOPERATION TREATY

PCT

INTERNATIONAL SEARCH REPORT

(PCT Article 18 and Rules 43 and 44)

Applicant's or agent's file reference WEBR04300WO	**FOR FURTHER ACTION**	see Form PCT/ISA/220 as well as, where applicable, item 5 below.
International application No. PCT/US2007/067084	International filing date *(day/month/year)* 20/04/2007	(Earliest) Priority Date *(day/month/year)* 20/04/2006
Applicant WEBROOT SOFTWARE, INC.		

This international search report has been prepared by this International Searching Authority and is transmitted to the applicant according to Article 18. A copy is being transmitted to the International Bureau.

This international search report consists of a total of 5 sheets.

[X] It is also accompanied by a copy of each prior art document cited in this report.

1. **Basis of the report**
   a. With regard to the **language,** the international search was carried out on the basis of:
      [X] the international application in the language in which it was filed
      [ ] a translation of the international application into _____, which is the language of a translation furnished for the purposes of international search (Rules 12.3(a) and 23.1(b))
   b. [ ] With regard to any **nucleotide and/or amino acid sequence** disclosed in the international application, see Box No. I.

2. [ ] **Certain claims were found unsearchable** (See Box No. II)

3. [ ] **Unity of invention is lacking** (see Box No III)

4. With regard to the **title,**
   [X] the text is approved as submitted by the applicant
   [ ] the text has been established by this Authority to read as follows:

5. With regard to the **abstract,**
   [X] the text is approved as submitted by the applicant
   [ ] the text has been established, according to Rule 38.2(b), by this Authority as it appears in Box No. IV. The applicant may, within one month from the date of mailing of this international search report, submit comments to this Authority

6. With regard to the **drawings,**
   a. the figure of the **drawings** to be published with the abstract is Figure No. 3
      [ ] as suggested by the applicant
      [ ] as selected by this Authority, because the applicant failed to suggest a figure
      [X] as selected by this Authority, because this figure better characterizes the invention
   b. [ ] none of the figures is to be published with the abstract

International application No
PCT/US2007/067084

A. CLASSIFICATION OF SUBJECT MATTER
INV. G06F21/00

According to International Patent Classification (IPC) or to both national classification and IPC

B. FIELDS SEARCHED

Minimum documentation searched (classification system followed by classification symbols)
G06F

Documentation searched other than minimum documentation to the extent that such documents are included in the fields searched

Electronic data base consulted during the international search (name of data base and, where practical, search terms used)

EPO-Internal, WPI Data

C. DOCUMENTS CONSIDERED TO BE RELEVANT

Category*	Citation of document, with indication, where appropriate, of the relevant passages	Relevant to claim No.
X	WO 98/45778 A (ZUTA MARC [IL]) 15 October 1998 (1998-10-15) page 16, line 7 - line 18 page 18, line 9 - line 12 page 26, line 1 - last line -----	1-4, 7-19,22, 23
X	US 2005/268112 A1 (WANG YI-MIN [US] ET AL) 1 December 2005 (2005-12-01) page 6, paragraph 50 -----	1,9,16
A	US 2006/074896 A1 (THOMAS STEVE [US] ET AL) 6 April 2006 (2006-04-06) page 2, paragraph 20 -----	
A	US 2004/064515 A1 (HOCKEY ALYN [GB]) 1 April 2004 (2004-04-01) page 6, paragraph 116 -----	

☐ Further documents are listed in the continuation of Box C.

☒ See patent family annex.

* Special categories of cited documents :

"A" document defining the general state of the art which is not considered to be of particular relevance

"E" earlier document but published on or after the international filing date

"L" document which may throw doubts on priority claim(s) or which is cited to establish the publication date of another citation or other special reason (as specified)

"O" document referring to an oral disclosure, use, exhibition or other means

"P" document published prior to the international filing date but later than the priority date claimed

"T" later document published after the international filing date or priority date and not in conflict with the application but cited to understand the principle or theory underlying the invention

"X" document of particular relevance; the claimed invention cannot be considered novel or cannot be considered to involve an inventive step when the document is taken alone

"Y" document of particular relevance; the claimed invention cannot be considered to involve an inventive step when the document is combined with one or more other such documents, such combination being obvious to a person skilled in the art.

"&" document member of the same patent family

Date of the actual completion of the international search	Date of mailing of the international search report
24 October 2007	05/11/2007

Name and mailing address of the ISA/	Authorized officer
European Patent Office, P.B. 5818 Patentlaan 2 NL - 2280 HV Rijswijk Tel. (+31-70) 340-2040, Tx. 31 651 epo nl, Fax: (+31-70) 340-3016	Arbutina, Ljiljana

Sophos Ex. 1014
Page 269 of 423

Continuation of Box II.2

Claims Nos.: 5,6,20,21

Method claim 5 has been drafted as dependent on claim 1. It is not clear from the wording of these claims whether the steps of monitoring and recording (claim 5) are performed before, or after, or interleaved with steps of identifying and accessing (claim 1).
According to the description, once a pestware presence is established, existing logs are accessed and analysed in order to identify the source of the pestware. This would imply that the steps of monitoring and recording (claim 5) are performed before the steps of identifying and accessing (claim 1). However, the steps of monitoring and recording refer to a pestware process, implying that a process is already identified as a pestware. This means that the step of identifying (claim 1) is performed first, which contradicts previous conclusion.
Since the scope of claim 5 could not be defined neither from the wording of claims 5 and 1 alone, nor trying to interpret it in the light of the description, no meaningful search for claim 5, dependent claim 6, and corresponding claims 20 and 21 could be done.

The applicant's attention is drawn to the fact that claims relating to inventions in respect of which no international search report has been established need not be the subject of an international preliminary examination (Rule 66.1(e) PCT). The applicant is advised that the EPO policy when acting as an International Preliminary Examining Authority is normally not to carry out a preliminary examination on matter which has not been searched. This is the case irrespective of whether or not the claims are amended following receipt of the search report or during any Chapter II procedure. If the application proceeds into the regional phase before the EPO, the applicant is reminded that a search may be carried out during examination before the EPO (see EPO Guideline C-VI, 8.5), should the problems which led to the Article 17(2) declaration be overcome.

INTERNATIONAL SEARCH REPORT

International application No.
PCT/US2007/067084

Box No. II Observations where certain claims were found unsearchable (Continuation of item 2 of first sheet)

This international search report has not been established in respect of certain claims under Article 17(2)(a) for the following reasons:

1. [ ] Claims Nos.:
because they relate to subject matter not required to be searched by this Authority, namely:

2. [X] Claims Nos.: 5,6,20,21
because they relate to parts of the international application that do not comply with the prescribed requirements to such an extent that no meaningful international search can be carried out, specifically:

see FURTHER INFORMATION sheet PCT/ISA/210

3. [ ] Claims Nos.:
because they are dependent claims and are not drafted in accordance with the second and third sentences of Rule 6.4(a).

Box No. III Observations where unity of invention is lacking (Continuation of item 3 of first sheet)

This International Searching Authority found multiple inventions in this international application, as follows:

1. [ ] As all required additional search fees were timely paid by the applicant, this international search report covers allsearchable claims.

2. [ ] As all searchable claims could be searched without effort justifying an additional fees, this Authority did not invite payment of additional fees.

3. [ ] As only some of the required additional search fees were timely paid by the applicant, this international search reportcovers only those claims for which fees were paid, specifically claims Nos.:

4. [ ] No required additional search fees were timely paid by the applicant. Consequently, this international search report is restricted to the invention first mentioned in the claims; it is covered by claims Nos.:

Remark on Protest

[ ] The additional search fees were accompanied by the applicant's protest and, where applicable, the payment of a protest fee.

[ ] The additional search fees were accompanied by the applicant's protest but the applicable protest fee was not paid within the time limit specified in the invitation.

[ ] No protest accompanied the payment of additional search fees.

Patent document cited in search report		Publication date	Patent family member(s)			Publication date
WO 9845778	A	15-10-1998	AU	6850798	A	30-10-1998
US 2005268112	A1	01-12-2005	EP	1605332	A2	14-12-2005
			JP	2005339565	A	08-12-2005
			KR	20060046231	A	17-05-2006
US 2006074896	A1	06-04-2006	NONE			
US 2004064515	A1	01-04-2004	AU	8235901	A	13-03-2002
			EP	1368719	A2	10-12-2003
			GB	2366706	A	13-03-2002
			WO	0219069	A2	07-03-2002

PATENT COOPERATION TREATY

From the
INTERNATIONAL SEARCHING AUTHORITY

To:

see form PCT/ISA/220

PCT

WRITTEN OPINION OF THE INTERNATIONAL SEARCHING AUTHORITY

(PCT Rule 43*bis*.1)

Date of mailing
(day/month/year) see form PCT/ISA/210 (second sheet)

Applicant's or agent's file reference
see form PCT/ISA/220

FOR FURTHER ACTION
See paragraph 2 below

International application No.	International filing date *(day/month/year)*	Priority date *(day/month/year)*
PCT/US2007/067084	20.04.2007	20.04.2006

International Patent Classification (IPC) or both national classification and IPC
INV. G06F21/00

Applicant
WEBROOT SOFTWARE, INC.

1. This opinion contains indications relating to the following items:

- ☒ Box No. I Basis of the opinion
- ☐ Box No. II Priority
- ☒ Box No. III Non-establishment of opinion with regard to novelty, inventive step and industrial applicability
- ☐ Box No. IV Lack of unity of invention
- ☒ Box No. V Reasoned statement under Rule 43*bis*.1(a)(i) with regard to novelty, inventive step or industrial applicability; citations and explanations supporting such statement
- ☐ Box No. VI Certain documents cited
- ☐ Box No. VII Certain defects in the international application
- ☐ Box No. VIII Certain observations on the international application

2. **FURTHER ACTION**

If a demand for international preliminary examination is made, this opinion will usually be considered to be a written opinion of the International Preliminary Examining Authority ("IPEA") except that this does not apply where the applicant chooses an Authority other than this one to be the IPEA and the chosen IPEA has notifed the International Bureau under Rule 66.1*bis*(b) that written opinions of this International Searching Authority will not be so considered.

If this opinion is, as provided above, considered to be a written opinion of the IPEA, the applicant is invited to submit to the IPEA a written reply together, where appropriate, with amendments, before the expiration of 3 months from the date of mailing of Form PCT/ISA/220 or before the expiration of 22 months from the priority date, whichever expires later.

For further options, see Form PCT/ISA/220.

3. For further details, see notes to Form PCT/ISA/220.

ENTERED JD
DUE: Art 34 Amend.
EOL: 2-5-2008

Name and mailing address of the ISA:	Date of completion of this opinion	Authorized Officer
European Patent Office - P.B. 5818 Patentlaan 2 NL-2280 HV Rijswijk - Pays Bas Tel. +31 70 340 - 2040 Tx: 31 651 epo nl Fax: +31 70 340 - 3016	see form PCT/ISA/210	Arbutina, Ljiljana Telephone No. +31 70 340-4522

Sophos Ex. 1014
Page 273 of 423

Box No. I Basis of the opinion

1. With regard to the **language**, this opinion has been established on the basis of:

   ☒ the international application in the language in which it was filed

   ☐ a translation of the international application into , which is the language of a translation furnished for the purposes of international search (Rules 12.3(a) and 23.1 (b)).

2. With regard to any **nucleotide and/or amino acid sequence** disclosed in the international application and necessary to the claimed invention, this opinion has been established on the basis of:

   a. type of material:

   ☐ a sequence listing

   ☐ table(s) related to the sequence listing

   b. format of material:

   ☐ on paper

   ☐ in electronic form

   c. time of filing/furnishing:

   ☐ contained in the international application as filed.

   ☐ filed together with the international application in electronic form.

   ☐ furnished subsequently to this Authority for the purposes of search.

3. ☐ In addition, in the case that more than one version or copy of a sequence listing and/or table relating thereto has been filed or furnished, the required statements that the information in the subsequent or additional copies is identical to that in the application as filed or does not go beyond the application as filed, as appropriate, were furnished.

4. Additional comments:

Box No. III Non-establishment of opinion with regard to novelty, inventive step and industrial applicability

The questions whether the claimed invention appears to be novel, to involve an inventive step (to be non obvious), or to be industrially applicable have not been examined in respect of

☐ the entire international application

☒ claims Nos. 5,6,20,21

because:

☐ the said international application, or the said claims Nos. relate to the following subject matter which does not require an international search *(specify)*:

☐ the description, claims or drawings *(indicate particular elements below)* or said claims Nos. are so unclear that no meaningful opinion could be formed *(specify)*:

☐ the claims, or said claims Nos. are so inadequately supported by the description that no meaningful opinion could be formed *(specify)*:

☒ no international search report has been established for the whole application or for said claims Nos. 5,6,20,21

☐ a meaningful opinion could not be formed without the sequence listing; the applicant did not, within the prescribed time limit:

- ☐ furnish a sequence listing on paper complying with the standard provided for in Annex C of the Administrative Instructions, and such listing was not available to the International Searching Authority in a form and manner acceptable to it.
- ☐ furnish a sequence listing in electronic form complying with the standard provided for in Annex C of the Administrative Instructions, and such listing was not available to the International Searching Authority in a form and manner acceptable to it.
- ☐ pay the required late furnishing fee for the furnishing of a sequence listing in response to an invitation under Rules 13*ter*.1(a) or (b).

☐ a meaningful opinion could not be formed without the tables related to the sequence listings; the applicant did not, within the prescribed time limit, furnish such tables in electronic form complying with the technical requirements provided for in Annex C-*bis* of the Administrative Instructions, and such tables were not available to the International Searching Authority in a form and manner acceptable to it.

☐ the tables related to the nucleotide and/or amino acid sequence listing, if in electronic form only, do not comply with the technical requirements provided for in Annex C-*bis* of the Administrative Instructions.

☐ See Supplemental Box for further details

Box No. V Reasoned statement under Rule 43*bis*.1(a)(i) with regard to novelty, inventive step or industrial applicability; citations and explanations supporting such statement

1. Statement

Novelty (N)	Yes:	Claims	2,10,11,12,13,17
	No:	Claims	1,3,4,7,8,9,14,15,16,18,19,22,23
Inventive step (IS)	Yes:	Claims	
	No:	Claims	1-4,7-19,22,23
Industrial applicability (IA)	Yes:	Claims	1-4,7-19,22,23
	No:	Claims	

2. Citations and explanations

see separate sheet

Re Item III.

No opinion is established for claims 5, 6, 20 and 21 because no international search report has been established for these claims. No meaningful search for these claims could be done for the following reason:

Method claim 5 has been drafted as dependent on claim 1. It is not clear from the wording of these claims whether the steps of monitoring and recording (claim 5) are performed before, or after, or interleaved with steps of identifying and accessing (claim 1). According to the description, once a pestware is detected on a computer, existing logs are accessed and analysed in order to identify the source of the pestware. This would imply that the steps of monitoring and recording (claim 5) are performed before steps of identifying and accessing (claim 1). However, the steps of monitoring and recording refer to a pestware process, implying that a process is already identified as a pestware. This means that the step of identifying (claim 1) is performed first, which contradicts previous conclusion.

Since the scope of claim 5 could not be defined neither from the wording of claims 5 and 1 alone, nor trying to interpret it in the light of the description, no meaningful search for claim 5, dependent claim 6, and corresponding claims 20 and 21 could be done.

Re Item V.

1 Reference is made to the following document:
D1 : WO 98/45778 A (ZUTA MARC [IL]) 15 October 1998 (1998-10-15)

2 INDEPENDENT CLAIMS 1, 9 AND 16

2.1. The present application does not meet the criteria of Article 33(1) PCT, because the subject-matter of claim 1 is not new in the sense of Article 33(2) PCT.

Document D1 discloses (the references in parentheses applying to this document):
a method for identifying an origin of pestware residing on computer comprising:
- identifying pestware on the computer (page 18, lines 9-12 and page 26, line 3, "a sensitive instruction or sequence of instructions took place");
- accessing recorded information on the computer relating to a history of the pestware, and traversing at least a subset of the recorded information, wherein the traversing includes accessing data within recorded information that provides a reference to an identity of a source of the pestware (page 26, lines 17-18: "logging the virus activity and tracing it to source").

2.2. Regarding corresponding computer program claim 16, it should be noted that, although the monitoring part itself in D1 is done by the hardware, this hardware is initiated by processor-executable instructions (D1, page 16, line 14). Therefore, the reasoning here above also applies, mutatis mutandis, to independent claim 16.

2.3. The additional feature of claim 9, namely a reporting portion configured to report the source of the pestware to a pestware research entity is also disclosed in D1, page 26, lines 16-17. Therefore, the subject-matter of claim 1 is not new (Article 33(2) PCT).

3 DEPENDENT CLAIMS 2-4, 7, 8, 10-15, 17-19, 22, 23

Dependent claims 2-4, 7, 8, 10-15, 17-19, 22, 23 do not contain any features which, in combination with the features of any claim to which they refer, meet the requirements of the PCT in respect of novelty and/or inventive step (Article 33(2) and (3) PCT), see the passages cited in the search report. It should be noted that D1 discloses in the cited passages a general idea of detecting a presence of a pestware in a computer and using activity log to trace the pestware to the source. A skilled person would, following this idea, implement a variety of detection methods and a variety of history logs present in the computer, depending on a specific computer and operating system used. Such modifications of D1 cannot be considered as involving an inventive step.

Possible steps after receipt of the international search report (ISR) and written opinion of the International Searching Authority (WO-ISA)

General information	For all international applications filed on or after 01/01/2004 the competent ISA will establish an ISR. It is accompanied by the WO-ISA. Unlike the former written opinion of the IPEA (Rule 66.2 PCT), the WO-ISA is not meant to be responded to, but to be taken into consideration for further procedural steps. This document explains about the possibilities.
Amending claims under Art. 19 PCT	Within 2 months after the date of mailing of the ISR and the WO-ISA the applicant may file amended claims under Art. 19 PCT directly with the International Bureau of WIPO. The PCT reform of 2004 did not change this procedure. For further information please see Rule 46 PCT as well as form PCT/ISA/220 and the corresponding Notes to form PCT/ISA/220.
Filing a demand for international preliminary examination	In principle, the WO-ISA will be considered as the written opinion of the IPEA. This should, in many cases, make it unnecessary to file a demand for international preliminary examination. If the applicant nevertheless wishes to file a demand this must be done before expiry of 3 months after the date of mailing of the ISR/ WO-ISA or 22 months after priority date, whichever expires later (Rule 54bis PCT). Amendments under Art. 34 PCT can be filed with the IPEA as before, normally at the same time as filing the demand (Rule 66.1 (b) PCT). If a demand for international preliminary examination is filed and no comments/amendments have been received the WO-ISA will be transformed by the IPEA into an IPRP (International Preliminary Report on Patentability) which would merely reflect the content of the WO-ISA. The demand can still be withdrawn (Art. 37 PCT).
Filing informal comments	After receipt of the ISR/WO-ISA the applicant may file informal comments on the WO-ISA directly with the International Bureau of WIPO. These will be communicated to the designated Offices together with the IPRP (International Preliminary Report on Patentability) at 30 months from the priority date. Please also refer to the next box.
End of the international phase	At the end of the international phase the International Bureau of WIPO will transform the WO-ISA or, if a demand was filed, the written opinion of the IPEA into the IPRP, which will then be transmitted together with possible informal comments to the designated Offices. The IPRP replaces the former IPER (international preliminary examination report).
Relevant PCT Rules and more information	Rule 43 PCT, Rule 43bis PCT, Rule 44 PCT, Rule 44bis PCT, PCT Newsletter 12/2003, OJ 11/2003, OJ 12/2003

PATENT COOPERATION TREATY

PCT

INTERNATIONAL SEARCH REPORT

(PCT Article 18 and Rules 43 and 44)

Applicant's or agent's file reference WEBR04500WO	**FOR FURTHER ACTION**	see Form PCT/ISA/220 as well as, where applicable, item 5 below.
International application No. PCT/US2007/067078	International filing date *(day/month/year)* 20/04/2007	(Earliest) Priority Date *(day/month/year)* 20/04/2006
Applicant WEBROOT SOFTWARE, INC.		

This international search report has been prepared by this International Searching Authority and is transmitted to the applicant according to Article 18. A copy is being transmitted to the International Bureau.

This international search report consists of a total of 3 sheets.

[X] It is also accompanied by a copy of each prior art document cited in this report.

1. **Basis of the report**
   a. With regard to the **language,** the international search was carried out on the basis of:
      [X] the international application in the language in which it was filed
      [ ] a translation of the international application into _____, which is the language of a translation furnished for the purposes of international search (Rules 12.3(a) and 23.1(b))
   b. [ ] With regard to any **nucleotide and/or amino acid sequence** disclosed in the international application, see Box No. I.
2. [ ] **Certain claims were found unsearchable** (See Box No. II)
3. [ ] **Unity of invention is lacking** (see Box No III)
4. With regard to the **title,**
   [X] the text is approved as submitted by the applicant
   [ ] the text has been established by this Authority to read as follows:
5. With regard to the **abstract,**
   [X] the text is approved as submitted by the applicant
   [ ] the text has been established, according to Rule 38.2(b), by this Authority as it appears in Box No. IV. The applicant may, within one month from the date of mailing of this international search report, submit comments to this Authority
6. With regard to the **drawings,**
   a. the figure of the **drawings** to be published with the abstract is Figure No. 1
      [X] as suggested by the applicant
      [ ] as selected by this Authority, because the applicant failed to suggest a figure
      [ ] as selected by this Authority, because this figure better characterizes the invention
   b. [ ] none of the figures is to be published with the abstract

International application No
PCT/US2007/067078

A. CLASSIFICATION OF SUBJECT MATTER
INV. G06F21/00

According to International Patent Classification (IPC) or to both national classification and IPC

B. FIELDS SEARCHED

Minimum documentation searched (classification system followed by classification symbols)
G06F

Documentation searched other than minimum documentation to the extent that such documents are included in the fields searched

Electronic data base consulted during the international search (name of data base and, where practical, search terms used)

EPO-Internal, WPI Data

C. DOCUMENTS CONSIDERED TO BE RELEVANT

Category*	Citation of document, with indication, where appropriate, of the relevant passages	Relevant to claim No.
X	WO 98/45778 A (ZUTA MARC [IL]) 15 October 1998 (1998-10-15) page 16, lines 7-20 page 18, lines 9-17 page 20, lines 1-12 page 23, line 19 - page 24, line 11 page 26, line 1 - page 27, line 1 -----	1-23
X	US 2004/024864 A1 (PORRAS PHILLIP ANDREW [US] ET AL) 5 February 2004 (2004-02-05) page 1, paragraph 5 page 1, paragraph 13 - page 2, paragraph 19 -----	1-23
A	US 2004/064515 A1 (HOCKEY ALYN [GB]) 1 April 2004 (2004-04-01) page 6, paragraph 116 -----	

☐ Further documents are listed in the continuation of Box C.

☒ See patent family annex.

* Special categories of cited documents :

"A" document defining the general state of the art which is not considered to be of particular relevance

"E" earlier document but published on or after the international filing date

"L" document which may throw doubts on priority claim(s) or which is cited to establish the publication date of another citation or other special reason (as specified)

"O" document referring to an oral disclosure, use, exhibition or other means

"P" document published prior to the international filing date but later than the priority date claimed

"T" later document published after the international filing date or priority date and not in conflict with the application but cited to understand the principle or theory underlying the invention

"X" document of particular relevance; the claimed invention cannot be considered novel or cannot be considered to involve an inventive step when the document is taken alone

"Y" document of particular relevance; the claimed invention cannot be considered to involve an inventive step when the document is combined with one or more other such documents, such combination being obvious to a person skilled in the art.

"&" document member of the same patent family

Date of the actual completion of the international search	Date of mailing of the international search report
23 October 2007	02/11/2007

Name and mailing address of the ISA/	Authorized officer
European Patent Office, P.B. 5818 Patentlaan 2 NL - 2280 HV Rijswijk Tel. (+31-70) 340-2040, Tx. 31 651 epo nl, Fax: (+31-70) 340-3016	Arbutina, Ljiljana

Sophos Ex. 1014
Page 282 of 423

Patent document cited in search report		Publication date	Patent family member(s)			Publication date
WO 9845778	A	15-10-1998	AU	6850798	A	30-10-1998
US 2004024864	A1	05-02-2004	NONE			
US 2004064515	A1	01-04-2004	AU	8235901	A	13-03-2002
			EP	1368719	A2	10-12-2003
			GB	2366706	A	13-03-2002
			WO	0219069	A2	07-03-2002

PATENT COOPERATION TREATY

From the
INTERNATIONAL SEARCHING AUTHORITY

To:

see form PCT/ISA/220

PCT

WRITTEN OPINION OF THE INTERNATIONAL SEARCHING AUTHORITY

(PCT Rule 43*bis*.1)

Date of mailing
(day/month/year) see form PCT/ISA/210 (second sheet)

Applicant's or agent's file reference
see form PCT/ISA/220

FOR FURTHER ACTION
See paragraph 2 below

International application No.	International filing date *(day/month/year)*	Priority date *(day/month/year)*
PCT/US2007/067078	20.04.2007	20.04.2006

International Patent Classification (IPC) or both national classification and IPC
INV. G06F21/00

Applicant
WEBROOT SOFTWARE, INC.

1. This opinion contains indications relating to the following items:

- ☒ Box No. I Basis of the opinion
- ☐ Box No. II Priority
- ☐ Box No. III Non-establishment of opinion with regard to novelty, inventive step and industrial applicability
- ☐ Box No. IV Lack of unity of invention
- ☒ Box No. V Reasoned statement under Rule 43*bis*.1(a)(i) with regard to novelty, inventive step or industrial applicability; citations and explanations supporting such statement
- ☐ Box No. VI Certain documents cited
- ☐ Box No. VII Certain defects in the international application
- ☐ Box No. VIII Certain observations on the international application

2. **FURTHER ACTION**

If a demand for international preliminary examination is made, this opinion will usually be considered to be a written opinion of the International Preliminary Examining Authority ("IPEA") except that this does not apply where the applicant chooses an Authority other than this one to be the IPEA and the chosen IPEA has notifed the International Bureau under Rule 66.1*bis*(b) that written opinions of this International Searching Authority will not be so considered.

If this opinion is, as provided above, considered to be a written opinion of the IPEA, the applicant is invited to submit to the IPEA a written reply together, where appropriate, with amendments, before the expiration of 3 months from the date of mailing of Form PCT/ISA/220 or before the expiration of 22 months from the priority date, whichever expires later.

For further options, see Form PCT/ISA/220.

3. For further details, see notes to Form PCT/ISA/220.

Written Opinion Response
ENTERED
DUE: 2/2/08
EOL:

Name and mailing address of the ISA:	Date of completion of this opinion	Authorized Officer
European Patent Office - P.B. 5818 Patentlaan 2 NL-2280 HV Rijswijk - Pays Bas Tel. +31 70 340 - 2040 Tx: 31 651 epo nl Fax: +31 70 340 - 3016	see form PCT/ISA/210	Arbutina, Ljiljana Telephone No. +31 70 340-4522

Box No. I Basis of the opinion

1. With regard to the **language**, this opinion has been established on the basis of:

   ☒ the international application in the language in which it was filed

   ☐ a translation of the international application into , which is the language of a translation furnished for the purposes of international search (Rules 12.3(a) and 23.1 (b)).

2. With regard to any **nucleotide and/or amino acid sequence** disclosed in the international application and necessary to the claimed invention, this opinion has been established on the basis of:

   a. type of material:

   ☐ a sequence listing

   ☐ table(s) related to the sequence listing

   b. format of material:

   ☐ on paper

   ☐ in electronic form

   c. time of filing/furnishing:

   ☐ contained in the international application as filed.

   ☐ filed together with the international application in electronic form.

   ☐ furnished subsequently to this Authority for the purposes of search.

3. ☐ In addition, in the case that more than one version or copy of a sequence listing and/or table relating thereto has been filed or furnished, the required statements that the information in the subsequent or additional copies is identical to that in the application as filed or does not go beyond the application as filed, as appropriate, were furnished.

4. Additional comments:

Box No. V Reasoned statement under Rule 43*bis*.1(a)(i) with regard to novelty, inventive step or industrial applicability; citations and explanations supporting such statement

1. Statement

Novelty (N)	Yes:	Claims	1-23
	No:	Claims	
Inventive step (IS)	Yes:	Claims	
	No:	Claims	1-23
Industrial applicability (IA)	Yes:	Claims	1-23
	No:	Claims	

2. Citations and explanations

see separate sheet

Re Item V.

1 Reference is made to the following documents:
D1 : WO 98/45778 A (ZUTA MARC [IL]) 15 October 1998 (1998-10-15)

2 INDEPENDENT CLAIMS 1 AND 12

2.1. The present application does not meet the criteria of Article 33(1) PCT, because the subject-matter of claim 1 is not inventive in the sense of Article 33(3) PCT.

Document D1 discloses (the references in parentheses applying to this document): a method for identifying an origin of suspected pestware activity on a computer comprising:
- establishing time of interest relating to a suspicion of pestware on the computer (page 16, lines 7-9, "1.monitoring means...indication to controller 21", where detecting abnormal operation represents time of interest relating to a suspicion of pestware);
- identifying, based upon the time of interest, indicia of pestware (page 16, lines 17-18, "smart analysis is done ... after receiving indication from monitoring means");
- accessing at least a portion of a recorded history so as to identify, based at least in part upon the identified indicia of pestware, a reference to an identity of a source that is suspected of originating pestware (page 26, last paragraph: "5.Tracks virus to source...to prosecute the culprit").

The difference between the subject-matter of claim 1 and D1 is that the recorded history contains sources that the computer received files from.
Document D1 discloses that the event history contains log of different events relating to the application, especially in the initial stages (page 26, second paragraph: "1.Monitors execution since init or reset. Logs TRS loading, disk access, communication access, especially in the initial stages of the application".)
In the context of D1 which is related to tracing the virus to its source, it would be a matter of a routine activity for a skilled person to include in the log of activities related to the application where the application was loaded from. Therefore, a skilled person would obtain the subject-matter of claim 1 without implementing any inventive skills.

Considering independent system claim 12, document D1 also discloses a time stamp module configured to generate a time of interest in response to a suspicion of pestware on the computer (page 20, lines 4-5).

Therefor, the subject-matter of claim 12 is also not inventive.

3 DEPENDENT CLAIMS 2-11, 13-23

Dependent claims 2-11, 13-23 do not contain any features which, in combination with the features of any claim to which they refer, meet the requirements of the PCT in respect of inventive step (Article 33(3) PCT), see the passages cited in the search report.

Possible steps after receipt of the international search report (ISR) and written opinion of the International Searching Authority (WO-ISA)

General information	For all international applications filed on or after 01/01/2004 the competent ISA will establish an ISR. It is accompanied by the WO-ISA. Unlike the former written opinion of the IPEA (Rule 66.2 PCT), the WO-ISA is not meant to be responded to, but to be taken into consideration for further procedural steps. This document explains about the possibilities.
Amending claims under Art. 19 PCT	Within 2 months after the date of mailing of the ISR and the WO-ISA the applicant may file amended claims under Art. 19 PCT directly with the International Bureau of WIPO. The PCT reform of 2004 did not change this procedure. For further information please see Rule 46 PCT as well as form PCT/ISA/220 and the corresponding Notes to form PCT/ISA/220.
Filing a demand for international preliminary examination	In principle, the WO-ISA will be considered as the written opinion of the IPEA. This should, in many cases, make it unnecessary to file a demand for international preliminary examination. If the applicant nevertheless wishes to file a demand this must be done before expiry of 3 months after the date of mailing of the ISR/WO-ISA or 22 months after priority date, whichever expires later (Rule 54bis PCT). Amendments under Art. 34 PCT can be filed with the IPEA as before, normally at the same time as filing the demand (Rule 66.1 (b) PCT). If a demand for international preliminary examination is filed and no comments/amendments have been received the WO-ISA will be transformed by the IPEA into an IPRP (International Preliminary Report on Patentability) which would merely reflect the content of the WO-ISA. The demand can still be withdrawn (Art. 37 PCT).
Filing informal comments	After receipt of the ISR/WO-ISA the applicant may file informal comments on the WO-ISA directly with the International Bureau of WIPO. These will be communicated to the designated Offices together with the IPRP (International Preliminary Report on Patentability) at 30 months from the priority date. Please also refer to the next box.
End of the international phase	At the end of the international phase the International Bureau of WIPO will transform the WO-ISA or, if a demand was filed, the written opinion of the IPEA into the IPRP, which will then be transmitted together with possible informal comments to the designated Offices. The IPRP replaces the former IPER (international preliminary examination report).
Relevant PCT Rules and more information	Rule 43 PCT, Rule 43bis PCT, Rule 44 PCT, Rule 44bis PCT, PCT Newsletter 12/2003, OJ 11/2003, OJ 12/2003

BD

WEBR-030/00US
303666-2076

PATENT COOPERATION TREATY

From the INTERNATIONAL SEARCHING AUTHORITY

To: Sean R O'Dowd
c/o Cooley Godward Kronish LLP
ATTN: PATENT GROUP
The Bowen Building
875 15th St NW
Suite 800
Washington DC 20005

PCT

NOTIFICATION OF TRANSMITTAL OF THE INTERNATIONAL SEARCH REPORT AND THE WRITTEN OPINION OF THE INTERNATIONAL SEARCHING AUTHORITY, OR THE DECLARATION

(PCT Rule 44.1)

	Date of mailing *(day/month/year)* 04 DEC 2007
Applicant's or agent's file reference WEBR03000WO	**FOR FURTHER ACTION** See paragraphs 1 and 4 below
International application No. PCT/US 06/41798	International filing date *(day/month/year)* 26 October 2006 (26.10.2006)
Applicant Webroot Software Inc	

1. ☒ The applicant is hereby notified that the international search report and the written opinion of the International Searching Authority have been established and are transmitted herewith.

   Filing of amendments and statement under Article 19:
   The applicant is entitled, if he so wishes, to amend the claims of the international application (see Rule 46):

   When? The time limit for filing such amendments is normally two months from the date of transmittal of the international search report.

   Where? Directly to the International Bureau of WIPO, 34 chemin des Colombettes 1211 Geneva 20, Switzerland, Facsimile No.: +41 22 740 14 35

   For more detailed instructions, see the notes on the accompanying sheet.

2. ☐ The applicant is hereby notified that no international search report will be established and that the declaration under Article 17(2)(a) to that effect and the written opinion of the International Searching Authority are transmitted herewith.

3. ☐ **With regard to the protest** against payment of (an) additional fee(s) under Rule 40.2, the applicant is notified that:

   ☐ the protest together with the decision thereon has been transmitted to the International Bureau together with the applicant's request to forward the texts of both the protest and the decision thereon to the designated Offices.

   ☐ no decision has been made yet on the protest; the applicant will be notified as soon as a decision is made.

4. **Reminders**

   Shortly after the expiration of **18 months** from the priority date, the international application will be published by the International Bureau. If the applicant wishes to avoid or postpone publication, a notice of withdrawal of the international application, or of the priority claim, must reach the International Bureau as provided in Rules 90*bis*.1 and 90*bis*.3, respectively, before the completion of the technical preparations for international publication.

   The applicant may submit comments on an informal basis on the written opinion of the International Searching Authority to the International Bureau. The International Bureau will send a copy of such comments to all designated Offices unless an international preliminary examination report has been or is to be established. These comments would also be made available to the public but not before the expiration of 30 months from the priority date.

   Within **19 months** from the priority date, but only in respect of some designated Offices, a demand for international preliminary examination must be filed if the applicant wishes to postpone the entry into the national phase **until 30 months** from the priority date (in some Offices even later); otherwise, the applicant must, **within 20 months** from the priority date, perform the prescribed acts for entry into the national phase before those designated Offices.

   In respect of other designated Offices, the time limit of **30 months** (or later) will apply even if no demand is filed within 19 months.

   See the Annex to Form PCT/IB/301 and, for details about the applicable time limits, Office by Office, see the *PCT Applicant's Guide*, Volume II, National Chapters and the WIPO Internet site.

Name and mailing address of the ISA/US Mail Stop PCT, Attn: ISA/US Commissioner for Patents P.O. Box 1450, Alexandria, Virginia 22313-1450 Facsimile No. 571-273-3201	Authorized officer: Lee W. Young PCT Helpdesk: 571-272-4300 PCT OSP: 571-272-7774

Form PCT/ISA/220 (January 2004)

ENTERED 85
DUE: Abstract 1/4/08
EOL: Article 19 2/4/08

(See notes on accompanying sheet)

RECEIVED
DEC 10 2007
COOLEY GODWARD KRONISH LLP

PATENT COOPERATION TREATY

From the INTERNATIONAL SEARCHING AUTHORITY

To: Sean R O'Dowd
c/o Cooley Godward Kronish LLP
ATTN: PATENT GROUP
The Bowen Building
875 15th St NW
Suite 800
Washington DC 20005

PCT

NOTIFICATION OF TRANSMITTAL OF THE INTERNATIONAL SEARCH REPORT AND THE WRITTEN OPINION OF THE INTERNATIONAL SEARCHING AUTHORITY, OR THE DECLARATION

(PCT Rule 44.1)

	Date of mailing *(day/month/year)* 04 DEC 2007
Applicant's or agent's file reference WEBR03000WO	**FOR FURTHER ACTION** See paragraphs 1 and 4 below
International application No. PCT/US 06/41798	International filing date *(day/month/year)* 26 October 2006 (26.10.2006)
Applicant Webroot Software Inc	

1. ☒ The applicant is hereby notified that the international search report and the written opinion of the International Searching Authority have been established and are transmitted herewith.

   Filing of amendments and statement under Article 19:
   The applicant is entitled, if he so wishes, to amend the claims of the international application (see Rule 46):

   When? The time limit for filing such amendments is normally two months from the date of transmittal of the international search report.

   Where? Directly to the International Bureau of WIPO, 34 chemin des Colombettes 1211 Geneva 20, Switzerland, Facsimile No.: +41 22 740 14 35

   For more detailed instructions, see the notes on the accompanying sheet.

2. ☐ The applicant is hereby notified that no international search report will be established and that the declaration under Article 17(2)(a) to that effect and the written opinion of the International Searching Authority are transmitted herewith.

3. ☐ **With regard to the protest** against payment of (an) additional fee(s) under Rule 40.2, the applicant is notified that:

   ☐ the protest together with the decision thereon has been transmitted to the International Bureau together with the applicant's request to forward the texts of both the protest and the decision thereon to the designated Offices.

   ☐ no decision has been made yet on the protest; the applicant will be notified as soon as a decision is made.

4. **Reminders**

   Shortly after the expiration of **18 months** from the priority date, the international application will be published by the International Bureau. If the applicant wishes to avoid or postpone publication, a notice of withdrawal of the international application, or of the priority claim, must reach the International Bureau as provided in Rules 90*bis*.1 and 90*bis*.3, respectively, before the completion of the technical preparations for international publication.

   The applicant may submit comments on an informal basis on the written opinion of the International Searching Authority to the International Bureau. The International Bureau will send a copy of such comments to all designated Offices unless an international preliminary examination report has been or is to be established. These comments would also be made available to the public but not before the expiration of 30 months from the priority date.

   Within **19 months** from the priority date, but only in respect of some designated Offices, a demand for international preliminary examination must be filed if the applicant wishes to postpone the entry into the national phase **until 30 months** from the priority date (in some Offices even later); otherwise, the applicant must, **within 20 months** from the priority date, perform the prescribed acts for entry into the national phase before those designated Offices.

   In respect of other designated Offices, the time limit of **30 months** (or later) will apply even if no demand is filed within 19 months.

   See the Annex to Form PCT/IB/301 and, for details about the applicable time limits, Office by Office, see the *PCT Applicant's Guide*, Volume II, National Chapters and the WIPO Internet site.

Name and mailing address of the ISA/US Mail Stop PCT, Attn: ISA/US Commissioner for Patents P.O. Box 1450, Alexandria, Virginia 22313-1450 Facsimile No. 571-273-3201	Authorized officer: Lee W. Young PCT Helpdesk: 571-272-4300 PCT OSP: 571-272-7774

PATENT COOPERATION TREATY

PCT

INTERNATIONAL SEARCH REPORT

(PCT Article 18 and Rules 43 and 44)

Applicant's or agent's file reference WEBR03000WO	**FOR FURTHER ACTION**	see Form PCT/ISA/220 as well as, where applicable, item 5 below.
International application No. PCT/US 06/41798	International filing date *(day/month/year)* 26 October 2006 (26.10.2006)	(Earliest) Priority Date *(day/month/year)* 26 October 2005 (26.10.2005)
Applicant Webroot Software Inc		

This international search report has been prepared by this International Searching Authority and is transmitted to the applicant according to Article 18. A copy is being transmitted to the International Bureau.

This international search report consists of a total of 2 sheets.

☐ It is also accompanied by a copy of each prior art document cited in this report.

1. **Basis of the report**
   a. With regard to the **language**, the international search was carried out on the basis of:
      ☒ the international application in the language in which it was filed.
      ☐ a translation of the international application into _____ which is the language of a translation furnished for the purposes of international search (Rules 12.3(a) and 23.1(b)).
   b. ☐ This international search report has been established taking into account the **rectification of an obvious mistake** authorized by or notified to this Authority under Rule 91 (Rule 43.6*bis*(a)).
   c. ☐ With regard to any **nucleotide and/or amino acid sequence** disclosed in the international application, see Box No. I.

2. ☐ **Certain claims were found unsearchable** (see Box No. II).

3. ☐ **Unity of invention is lacking** (see Box No. III).

4. With regard to the **title**,
   ☒ the text is approved as submitted by the applicant.
   ☐ the text has been established by this Authority to read as follows:

5. With regard to the **abstract**,
   ☒ the text is approved as submitted by the applicant.
   ☐ the text has been established, according to Rule 38.2(b), by this Authority as it appears in Box No. IV. The applicant may, within one month from the date of mailing of this international search report, submit comments to this Authority.

6. With regard to the **drawings**,
   a. the figure of the **drawings** to be published with the abstract is Figure No. 1
      ☒ as suggested by the applicant.
      ☐ as selected by this Authority, because the applicant failed to suggest a figure.
      ☐ as selected by this Authority, because this figure better characterizes the invention.
   b. ☐ none of the figures is to be published with the abstract.

INTERNATIONAL SEARCH REPORT

International application No.
PCT/US 06/41798

A. CLASSIFICATION OF SUBJECT MATTER
IPC(8): G06F 12/14 (2007.01)
USPC: 726/24
According to International Patent Classification (IPC) or to both national classification and IPC

B. FIELDS SEARCHED

Minimum documentation searched (classification system followed by classification symbols)
USPC: 726/24

Documentation searched other than minimum documentation to the extent that such documents are included in the fields searched
USPC: 726/22-25 (view text search terms below)

Electronic data base consulted during the international search (name of data base and, where practicable, search terms used)

pubWEST(PGPB,USPT,EPAB,JPAB; PLUR=YES; DialogPRO(Engineering); Google Scholar; Text search terms: pestware, protected computer, pestware construct, functions exported pestware process, neutralization pestware process, skipping portion executed code, pestware functions exported, pestware process, registry entries, detected

C. DOCUMENTS CONSIDERED TO BE RELEVANT

Category*	Citation of document, with indication, where appropriate, of the relevant passages	Relevant to claim No.
X	US 2004/0034794 A1 (MAYER, et al.) 19 February 2004 (19.02.2004) entire document, (especially Abstract, FIGS.4 and 7 and para [0028], [0079], [0112] and [0116]).	1-24
A	JACOBSSON, Andreas et al. Privacy-Invasive Software in File-Sharing Tools. In IEEE Conference Proceeding, IFIP World Computer Congress (WCC2004), Toulouse France, 2004. [retrieved on 2007-07-20]. Retrieved from the Internet: <URL: http://www.ipd.bth.se/aja/Publications/Privacy-InvasiveSoftwareInFile-SharingTools.pdf >	1-24

☐ Further documents are listed in the continuation of Box C. ☐

* Special categories of cited documents:
"A" document defining the general state of the art which is not considered to be of particular relevance
"E" earlier application or patent but published on or after the international filing date
"L" document which may throw doubts on priority claim(s) or which is cited to establish the publication date of another citation or other special reason (as specified)
"O" document referring to an oral disclosure, use, exhibition or other means
"P" document published prior to the international filing date but later than the priority date claimed
"T" later document published after the international filing date or priority date and not in conflict with the application but cited to understand the principle or theory underlying the invention
"X" document of particular relevance; the claimed invention cannot be considered novel or cannot be considered to involve an inventive step when the document is taken alone
"Y" document of particular relevance; the claimed invention cannot be considered to involve an inventive step when the document is combined with one or more other such documents, such combination being obvious to a person skilled in the art
"&" document member of the same patent family

Date of the actual completion of the international search	Date of mailing of the international search report
20 July 2007 (20.07.2007)	04 DEC 2007
Name and mailing address of the ISA/US Mail Stop PCT, Attn: ISA/US, Commissioner for Patents P.O. Box 1450, Alexandria, Virginia 22313-1450 Facsimile No. 571-273-3201	Authorized officer: Lee W. Young PCT Helpdesk: 571-272-4300 PCT OSP: 571-272-7774

Form PCT/ISA/210 (second sheet) (April 2007)

TMC
WEBR-030/00WO
303666-2076

PATENT COOPERATION TREATY

From the 237
INTERNATIONAL SEARCHING AUTHORITY

To: Sean R O'Dowd
c/o Cooley Godward Kronish LLP
ATTN: PATENT GROUP
The Bowen Building
875 15th St NW
Suite 800
Washington DC 20005

PCT

WRITTEN OPINION OF THE
INTERNATIONAL SEARCHING AUTHORITY

(PCT Rule 43*bis*.1)

Date of mailing *(day/month/year)*	04 DEC 2007
Applicant's or agent's file reference WEBR03000WO	**FOR FURTHER ACTION** See paragraph 2 below

International application No.	International filing date *(day/month/year)*	Priority date *(day/month/year)*
PCT/US 06/41798	26 October 2006 (26.10.2006)	26 October 2005 (26.10.2005)

International Patent Classification (IPC) or both national classification and IPC
IPC(8) - G06F 12/14 (2007.01)
USPC - 726/24

Applicant Webroot Software Inc

1. This opinion contains indications relating to the following items:

- [x] Box No. I Basis of the opinion
- [ ] Box No. II Priority
- [ ] Box No. III Non-establishment of opinion with regard to novelty, inventive step and industrial applicability
- [ ] Box No. IV Lack of unity of invention
- [x] Box No. V Reasoned statement under Rule 43*bis*.1(a)(i) with regard to novelty, inventive step or industrial applicability; citations and explanations supporting such statement
- [ ] Box No. VI Certain documents cited
- [ ] Box No. VII Certain defects in the international application
- [ ] Box No. VIII Certain observations on the international application

2. **FURTHER ACTION**

If a demand for international preliminary examination is made, this opinion will be considered to be a written opinion of the International Preliminary Examining Authority ("IPEA") except that this does not apply where the applicant chooses an Authority other than this one to be the IPEA and the chosen IPEA has notified the International Bureau under Rule 66.1*bis*(b) that written opinions of this International Searching Authority will not be so considered.

If this opinion is, as provided above, considered to be a written opinion of the IPEA, the applicant is invited to submit to the IPEA a written reply together, where appropriate, with amendments, before the expiration of 3 months from the date of mailing of Form PCT/ISA/220 or before the expiration of 22 months from the priority date, whichever expires later.

For further options, see Form PCT/ISA/220.

3. For further details, see notes to Form PCT/ISA/220.

RECEIVED
DEC 10 2007
COOLEY GODWARD KRONISH LLP

Name and mailing address of the ISA/US	Date of completion of this opinion	Authorized officer
Mail Stop PCT, Attn: ISA/US Commissioner for Patents P.O. Box 1450, Alexandria, Virginia 22313-1450 Facsimile No. 571-273-3201	20 July 2007 (20.07.2007)	Lee W. Young PCT Helpdesk: 571-272-4300 PCT OSP: 571-272-7774

ENTERED
DUE: 3/4/08
EOL: 3/4/08
Written Opinion

WRITTEN OPINION OF THE INTERNATIONAL SEARCHING AUTHORITY

International application No.
PCT/US 06/41798

Box No. I Basis of this opinion

1. With regard to the **language**, this opinion has been established on the basis of:
   - [X] the international application in the language in which it was filed.
   - [ ] a translation of the international application into _____ which is the language of a translation furnished for the purposes of international search (Rules 12.3(a) and 23.1(b)).

2. [ ] This opinion has been established taking into account the **rectification of an obvious mistake** authorized by or notified to this Authority under Rule 91 (Rule 43*bis*.1(a))

3. With regard to any **nucleotide and/or amino acid sequence** disclosed in the international application, this opinion has been established on the basis of:
   a. type of material
      - [ ] a sequence listing
      - [ ] table(s) related to the sequence listing

   b. format of material
      - [ ] on paper
      - [ ] in electronic form

   c. time of filing/furnishing
      - [ ] contained in the international application as filed
      - [ ] filed together with the international application in electronic form
      - [ ] furnished subsequently to this Authority for the purposes of search

4. [ ] In addition, in the case that more than one version or copy of a sequence listing and/or table(s) relating thereto has been filed or furnished, the required statements that the information in the subsequent or additional copies is identical to that in the application as filed or does not go beyond the application as filed, as appropriate, were furnished.

5. Additional comments:

WRITTEN OPINION OF THE INTERNATIONAL SEARCHING AUTHORITY

International application No.
PCT/US 06/41798

Box No. V **Reasoned statement under Rule 43*bis*.1(a)(i) with regard to novelty, inventive step or industrial applicability; citations and explanations supporting such statement**

1. Statement

Novelty (N)	Claims	None	YES
	Claims	1-24	NO
Inventive step (IS)	Claims	None	YES
	Claims	1-24	NO
Industrial applicability (IA)	Claims	1-24	YES
	Claims	None	NO

2. Citations and explanations:

Claims 1-24 lack novelty under PCT Article 33(2) as being anticipated by US 2004/0034794 A1 to Mayer et al. (hereinafter, 'Mayer').

As to claim 1, 9 and 17, Mayer teaches a method, a computer-readable medium comprising executable instructions and a system for neutralizing and/or removing pestware, comprising: identifying a pestware construct (e.g. rules of appropriate behavior of software so that the system can identify and intercept immediately programs that may be performing or trying to perform suspicious and/or detrimental and/or potentially dangerous activities, see para [0028]); accessing at least one function exported by the pestware construct (e.g. executable filtering code placed between the calling code and called function and thus has the ability for example to monitor and/or intercept and/or redefine the function that is being hooked, see para [0079]); and writing an instruction into the memory for the at least one exported function that renders the at least one exported function substantially ineffective (e.g. the security system preferably rewrites on the fly each such command in the operating system code which is running in the computer's RAM to access instead the current ring, see para [0116]).

As to claim 2, 10 and 18, Mayer further teaches the accessing at least one function exported by the pestware construct comprises: reading a memory address corresponding to the at least one export function (e.g. modify or replace sensitive areas or files or device drivers in the storage media (and preferably, to the extent possible, also in the computer's RAM), which are regarded by the Security System as High security areas, see para [0109]); populating a list with the at least one export function memory address (e.g. viewing and/or modifying the database of authorizations is for example in the form of a table which lists the names and preferably various identification marks of applications allowed to access communication channels, see para [0128]); and advancing through the list of at least one export function memory address to access the at least one export function (e.g. a malicious buffer overflow can for example use stack smashing in order to insert an executable code into the data area and a return address in the stack that points to that code, and then it does not need to change the code of the original process, see para [0112]).

As to claim 3, 11 and 19, Mayer further teaches the instruction written into memory for each of the exported functions is a return instruction that causes each of the exported functions, when accessed by the pestware construct, to return without executing pestware instructions within each respective exported function (e.g. he buffer overflow can also change the return address in the stack, see para [0112]).

As to claim 4, 12 and 20, Mayer further teaches the return instruction initiates a jump to a return value within the code of the at least one export function so as to preclude execution of at least a portion of the export function code (e.g. If the Security System spots any suspicious deviation in activity, the answer returned to the caller function is negative, see para [0134] and FIG.7).

As to claim 5, 13 and 21, Mayer further teaches the identifying the pestware construct includes using a technique selected from the group consisting of a definition matching approach, a heuristics approach, and a dynamic offset scanning approach (e.g. Security system uses various heuristics, see para [0139]).

As to claim 6, 14 and 22, Mayer further teaches the pestware construct is a dynamic link library (e.g. DLLs can only be activated by properly calling them from the program's code, see para [0112]).

As to claim 7, 15 and 23, Mayer further teaches the identifying a pestware construct, accessing each function exported by the pestware construct, and writing an instruction into the memory for each of the exported functions that renders each of the exported functions substantially ineffective are performed at a computer, the method further comprising: deleting registry entries associated with the pestware construct (e.g. , see para [0]); and scheduling the pestware construct for deletion after the next reboot (e.g. hooked functions that are called due to a registry related action (such as for example read, write, change, etc.), see para [0131] and FIG.4).

As to claim 8, 16 and 24, Mayer further teaches the neutralizing the pestware construct is accomplished without removing the pestware construct (e.g. Security System preferably makes sure that it will not be thrown out of the RAM by other applications that might try to neutralize it, see para [0109]).

Claims 1-24 have industrial applicability as defined by PCT Article 33(4) because the subject matter can be made or used in industry.

NOTES TO FORM PCT/ISA/220 (continued)

The letter must indicate the differences between the claims as filed and the claims as amended. It must, in particular, indicate, in connection with each claim appearing in the international application (it being understood that identical indications concerning several claims may be grouped), whether

(i) the claim is unchanged;
(ii) the claim is cancelled;
(iii) the claim is new;
(iv) the claim replaces one or more claims as filed;
(v) the claim is the result of the division of a claim as filed.

The following examples illustrate the manner in which amendments must be explained in the accompanying letter:

1. [Where originally there were 48 claims and after amendment of some claims there are 51]:
"Claims 1 to 29, 31, 32, 34, 35, 37 to 48 replaced by amended claims bearing the same numbers, claims 30, 33 and 36 unchanged; new claims 49 to 51 added."
2. [Where originally there were 15 claims and after amendment of all claims there are 11]:
"Claims 1 to 15 replaced by amended claims 1 to 11."
3. [Where originally there were 14 claims and the amendments consist in cancelling some claims and in adding new claims]:
"Claims 1 to 6 and 14 unchanged; claims 7 to 13 cancelled; new claims 15, 16 and 17 added." or
"Claims 7 to 13 cancelled; new claims 15, 16 and 17 added; all other claims unchanged."
4. [Where various kinds of amendments are made]:
"Claims 1-10 unchanged; claims 11 to 13, 18 and 19 cancelled; claims 14, 15 and 16 replaced by amended claim 14; claim 17 subdivided into amended claims 15, 16 and 17; new claims 20 and 21 added."

"Statement under Article 19(1)" (Rule 46.4)

The amendments may be accompanied by a statement explaining the amendments and indicating any impact that such amendments might have on the description and the drawings (which cannot be amended under Article 19(1)).

The statement will be published with the international application and the amended claims.

It must be in the language in which the international application is to be published.

It must be brief, not exceeding 500 words if in English or if translated into English.

It should not be confused with and does not replace the letter indicating the differences between the claims as filed and as amended. It must be filed on a separate sheet and must be identified as such by a heading, preferably by using the words "Statement under Article 19(1)."

It may not contain any disparaging comments on the international search report or the relevance of citations contained in that report. Reference to citations, relevant to a given claim, contained in the international search report may be made only in connection with an amendment of that claim.

Consequence if a demand for international preliminary examination has already been filed

If, at the time of filing any amendments and any accompanying statement, under Article 19, a demand for international preliminary examination has already been submitted, the applicant must preferably, at the time of filing the amendments (and any statement) with the International Bureau, also file with the International Preliminary Examining Authority a copy of such amendments (and of any statement) and, where required, a translation of such amendments for the procedure before that Authority (see Rules 55.3(a) and 62.2, first sentence). For further information, see the Notes to the demand form (PCT/IPEA/401).

If a demand for international preliminary examination is made, the written opinion of the International Searching Authority will, except in certain cases where the International Preliminary Examining Authority did not act as International Searching Authority and where it has notified the International Bureau under Rule 66.1*bis*(b), be considered to be a written opinion of the International Preliminary Examining Authority. If a demand is made, the applicant may submit to the International Preliminary Examining Authority a reply to the written opinion together, where appropriate, with amendments before the expiration of 3 months from the date of mailing of Form PCT/ISA/220 or before the expiration of 22 months from the priority date, whichever expires later (Rule 43*bis*.1(c)).

Consequence with regard to translation of the international application for entry into the national phase

The applicant's attention is drawn to the fact that, upon entry into the national phase, a translation of the claims as amended under Article 19 may have to be furnished to the designated/elected Offices, instead of, or in addition to, the translation of the claims as filed.

For further details on the requirements of each designated/elected Office, see the *PCT Applicant's Guide*, Volume II.

Sophos Ex. 1014
Page 297 of 423

Electronic Acknowledgement Receipt

EFS ID:	3347402
Application Number:	11408146
International Application Number:	
Confirmation Number:	8009
Title of Invention:	Backwards researching activity indicative of pestware
First Named Inventor/Applicant Name:	Matthew L. Boney
Customer Number:	22903
Filer:	Thomas M. Croft/Sherry Bitler
Filer Authorized By:	Thomas M. Croft
Attorney Docket Number:	WEBR-044/00US 303666-2049
Receipt Date:	22-MAY-2008
Filing Date:	20-APR-2006
Time Stamp:	20:36:24
Application Type:	Utility under 35 USC 111(a)

Payment information:

Submitted with Payment	no

File Listing:

Document Number	Document Description	File Name	File Size(Bytes) /Message Digest	Multi Part /.zip	Pages (if appl.)
1	Information Disclosure Statement (IDS) Filed	WEBR04400USids.pdf	109313 76b0911c8915b6ab4c133b912bf147c8568349ff	no	3

Warnings:

Information:

This is not an USPTO supplied IDS fillable form					
2	Foreign Reference	WEBR04400US-01700WOsrwo.pdf	509169 e37ca3d518b9a0140775e6ccfb13280a654aae2a	no	10
Warnings:					
Information:					
3	Foreign Reference	WEBR04400US-04300WOsrwo.pdf	519256 98eb39c331fa9355cda0ae71cc52805b3a2e0c5f	no	13
Warnings:					
Information:					
4	Foreign Reference	WEBR04400US-04500WOsrwo.pdf	346464 ca4e0a0e1293beb32143935dce6f53dc461f2151	no	9
Warnings:					
Information:					
5	Foreign Reference	WEBR04400US-03000WOsrwo.pdf	495492 52060ef3ac0f56ab5aadd755341869befe4bf02d	no	8
Warnings:					
Information:					
			Total Files Size (in bytes):	1979694	

This Acknowledgement Receipt evidences receipt on the noted date by the USPTO of the indicated documents, characterized by the applicant, and including page counts, where applicable. It serves as evidence of receipt similar to a Post Card, as described in MPEP 503.

New Applications Under 35 U.S.C. 111
If a new application is being filed and the application includes the necessary components for a filing date (see 37 CFR 1.53(b)-(d) and MPEP 506), a Filing Receipt (37 CFR 1.54) will be issued in due course and the date shown on this Acknowledgement Receipt will establish the filing date of the application.

National Stage of an International Application under 35 U.S.C. 371
If a timely submission to enter the national stage of an international application is compliant with the conditions of 35 U.S.C. 371 and other applicable requirements a Form PCT/DO/EO/903 indicating acceptance of the application as a national stage submission under 35 U.S.C. 371 will be issued in addition to the Filing Receipt, in due course.

New International Application Filed with the USPTO as a Receiving Office
If a new international application is being filed and the international application includes the necessary components for an international filing date (see PCT Article 11 and MPEP 1810), a Notification of the International Application Number and of the International Filing Date (Form PCT/RO/105) will be issued in due course, subject to prescriptions concerning national security, and the date shown on this Acknowledgement Receipt will establish the international filing date of the application.

IN THE UNITED STATES PATENT AND TRADEMARK OFFICE

In re Application of Matthew L. BONEY — Confirmation No.: 8009

Serial No.: 11/408,146 — Group Art Unit: 2154

Filed: 04/20/2006 — Examiner: Not Yet Assigned

FOR: BACKWARDS RESEARCHING ACTIVITY INDICATIVE OF PESTWARE

Mail Stop Amendment
Commissioner for Patents
P.O. Box 1450
Alexandria, VA 22313-1450

INFORMATION DISCLOSURE STATEMENT UNDER 37 C.F.R. §1.97(b)

In accordance with the duty of disclosure set forth in 37 C.F.R. §1.56, Applicant(s) hereby submits the following information in conformance with 37 C.F.R. §§1.97 and 1.98.

[x] Pursuant to 37 C.F.R. §1.98, a copy of each non-US patent document cited in the attached Form PTO/SB/08 is enclosed.

[x] No copies of any U.S. patents or U.S. patent application publications listed on the attached Form PTO/SB/08 are being provided pursuant to 37 C.F.R. §1.98.

[x] Publications listed on the attached Form PTO/SB/08 were cited in a foreign search or examination report corresponding to PCT application no. PCT/US2007/067076 mailed on November 2, 2007.

This Information Disclosure Statement is filed within any one of the following time periods:

[] within three months from the filing date of this national application other than a CPA under 37 C.F.R. § 1.53(d);

[] within three months from the date of entry of the national stage as set forth in 37 C.F.R. §1.491 in this international application;

[x] before the mailing date of a first office action on the merits; or

[] before the mailing of a first office action after the filing of a request for continued examination under 37 C.F.R. § 1.114.

It is respectfully requested that the Examiner consider the above-noted information and return an initialed copy of the attached Form PTO/SB/08 to the undersigned.

Dated: November 20, 2007

Respectfully submitted,
COOLEY GODWARD KRONISH LLP

COOLEY GODWARD KRONISH LLP
ATTN: Patent Group
777 6th Street NW, Suite 1100
Washington, DC 20001

Tel: (720) 566-4044
Fax: (202) 842-7899

By: Thomas M. Croft
Thomas M. Croft
Reg. No. 44,051

288646 v1/CO

Please type a plus sign (+) inside this box ➔ +

PTO/SB/08A (07-05)
Approved for use through 07/31/2006. OMB 0651-0031

Substitute for form 1449A/PTO		Complete if Known	
INFORMATION DISCLOSURE STATEMENT BY APPLICANT		Application Number	11/408,146
		Filing Date	04/20/2006
		First Named Inventor	Matthew L. BONEY
		Group Art Unit	2154
(use as many sheets as necessary)		Examiner Name	
Sheet	1 of 1	Attorney Docket Number	WEBR-044/00US 303666-2049

U.S. PATENT DOCUMENTS

Examiner Initials*	Cite No.[1]	Document Number Number-Kind Code[2] (if known)	Publication Date MM-DD-YYYY	Name of Patentee or Applicant of Cited Document	Pages, Columns, Lines, Where Relevant Passages or Relevant Figures Appear
		US-2004/0064515 A1	04-01-2004	Alyn HOCKEY	
		US-2005/0268112 A1	12-01-2005	Yi-Min WANG	

FOREIGN PATENT DOCUMENTS

Examiner Initials*	Cite No.[1]	Foreign Patent Document Country Code[3] Number[4] Kind Code[5] (if known)	Publication Date MM-DD-YYYY	Name of Patentee or Applicant of Cited Document	Pages, Columns, Lines, Where Relevant Passages or Relevant Figures Appear	T[2]
		WO 98/45778	10-15-1998	Marc ZUTA		

OTHER – NON PATENT LITERATURE DOCUMENTS

Examiner Initials*	Cite No.[1]	Include name of the author (in CAPITAL LETTERS), title of the article (when appropriate), title of the item (book, magazine, journal, serial, symposium, catalog, etc.), date, page(s), volume-issue number(s), publisher, city and/or country where published.	T[2]
		PCT/US2007/067076 International Search Report and Written Opinion of the International Searching Authority mailed 11/02/2007	

Examiner Signature		Date Considered	

*EXAMINER: Initial if reference considered, whether or not citation is in conformance with MPEP 609. Draw line through citation if not in conformance and not considered. Include copy of this form with next communication to applicant. [1]Unique citation designation number (optional). [2]See attached Kinds of U.S. Patent Documents. This collection of information is required by 37 CFR 1.97 and 1.98. The information is required to obtain or retain a benefit by the public which is to file (and by the USPTO to process) an application. Confidentiality is governed by 35 U.S.C. 122 and 37 CFR 1.14. This collection is estimated to take 2 hours to complete, including gathering, preparing, and submitting the completed application form to the USPTO. Time will vary depending upon the individual case. Any comments on the amount of time you require to complete this form and/or suggestions for reducing this burden, should be sent to the Chief Information Officer, U.S. Patent and Trademark Office, U.S. Department of Commerce, P.O. Box 1450, Alexandria, VA 22313-1450. DO NOT SEND FEES OR COMPLETED FORMS TO THIS ADDRESS. **SEND TO: Commissioner for Patents, P.O. Box 1450, Alexandria, VA 22313-1450.**

If you need assistance in completing the form, call 1-800-PTO-9199 and select option 2.

PCT

WORLD INTELLECTUAL PROPERTY ORGANIZATION
International Bureau

INTERNATIONAL APPLICATION PUBLISHED UNDER THE PATENT COOPERATION TREATY (PCT)

(51) International Patent Classification 6 : G06F 11/00

A2

(11) International Publication Number: WO 98/45778

(43) International Publication Date: 15 October 1998 (15.10.98)

(21) International Application Number: PCT/IL98/00170

(22) International Filing Date: 8 April 1998 (08.04.98)

(30) Priority Data:
120632 8 April 1997 (08.04.97) IL

(71)(72) Applicant and Inventor: ZUTA, Marc [IL/IL]; Ben Yehuda Street 19, 49373 Petah Tikva (IL).

(81) Designated States: AL, AM, AT, AU, AZ, BA, BB, BG, BR, BY, CA, CH, CN, CU, CZ, DE, DK, EE, ES, FI, GB, GE, GH, GM, GW, HU, ID, IL, IS, JP, KE, KG, KP, KR, KZ, LC, LK, LR, LS, LT, LU, LV, MD, MG, MK, MN, MW, MX, NO, NZ, PL, PT, RO, RU, SD, SE, SG, SI, SK, SL, TJ, TM, TR, TT, UA, UG, US, UZ, VN, YU, ZW, ARIPO patent (GH, GM, KE, LS, MW, SD, SZ, UG, ZW), Eurasian patent (AM, AZ, BY, KG, KZ, MD, RU, TJ, TM), European patent (AT, BE, CH, CY, DE, DK, ES, FI, FR, GB, GR, IE, IT, LU, MC, NL, PT, SE), OAPI patent (BF, BJ, CF, CG, CI, CM, GA, GN, ML, MR, NE, SN, TD, TG).

Published
Without international search report and to be republished upon receipt of that report.

(54) Title: ANTIVIRUS SYSTEM AND METHOD

(57) Abstract

In an antivirus multiprocessor system, a second processor attached to a first processor for monitoring its performance and intervening if predefined behaviour thereof is detected. The second processor includes means for continuously supervising the operation of the first processor to detect virus-related activities therein by comparing actual performed instructions in the first processor with instruction sequences corresponding to known viruses or to predefined suspect behaviour. It will stop the first processor after a virus detection. A plurality of sensors is used to detect suspect activity in various media like radio frequency or wireless RF, serial or parallel communication channels, ultrasound, sonic or subsonic waves, power lines and/or optical media including infrared, visible light and/or ultraviolet. An antivirus protection method includes the steps of: A. connecting a second processor to an applications processor; B. using the second processor to continuously monitor the activities on the first processor and to compare to predefined forbidden activities; and C. taking actions in real time when a forbidden activity takes place, to prevent damage to the applications processor.

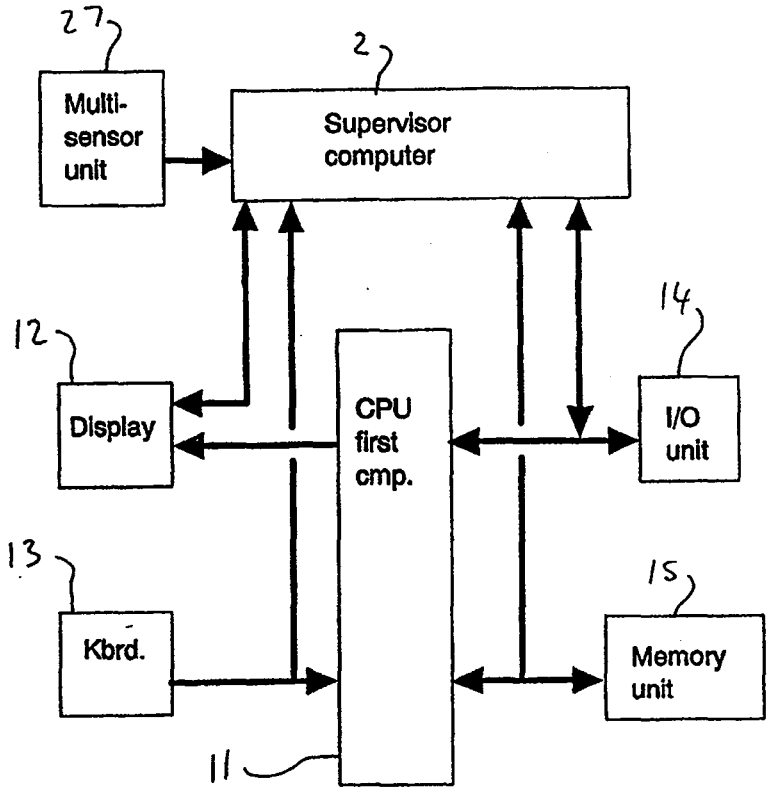

FOR THE PURPOSES OF INFORMATION ONLY

Codes used to identify States party to the PCT on the front pages of pamphlets publishing international applications under the PCT.

AL	Albania	**ES**	Spain	**LS**	Lesotho	**SI**	Slovenia
AM	Armenia	**FI**	Finland	**LT**	Lithuania	**SK**	Slovakia
AT	Austria	**FR**	France	**LU**	Luxembourg	**SN**	Senegal
AU	Australia	**GA**	Gabon	**LV**	Latvia	**SZ**	Swaziland
AZ	Azerbaijan	**GB**	United Kingdom	**MC**	Monaco	**TD**	Chad
BA	Bosnia and Herzegovina	**GE**	Georgia	**MD**	Republic of Moldova	**TG**	Togo
BB	Barbados	**GH**	Ghana	**MG**	Madagascar	**TJ**	Tajikistan
BE	Belgium	**GN**	Guinea	**MK**	The former Yugoslav Republic of Macedonia	**TM**	Turkmenistan
BF	Burkina Faso	**GR**	Greece			**TR**	Turkey
BG	Bulgaria	**HU**	Hungary	**ML**	Mali	**TT**	Trinidad and Tobago
BJ	Benin	**IE**	Ireland	**MN**	Mongolia	**UA**	Ukraine
BR	Brazil	**IL**	Israel	**MR**	Mauritania	**UG**	Uganda
BY	Belarus	**IS**	Iceland	**MW**	Malawi	**US**	United States of America
CA	Canada	**IT**	Italy	**MX**	Mexico	**UZ**	Uzbekistan
CF	Central African Republic	**JP**	Japan	**NE**	Niger	**VN**	Viet Nam
CG	Congo	**KE**	Kenya	**NL**	Netherlands	**YU**	Yugoslavia
CH	Switzerland	**KG**	Kyrgyzstan	**NO**	Norway	**ZW**	Zimbabwe
CI	Côte d'Ivoire	**KP**	Democratic People's Republic of Korea	**NZ**	New Zealand		
CM	Cameroon			**PL**	Poland		
CN	China	**KR**	Republic of Korea	**PT**	Portugal		
CU	Cuba	**KZ**	Kazakstan	**RO**	Romania		
CZ	Czech Republic	**LC**	Saint Lucia	**RU**	Russian Federation		
DE	Germany	**LI**	Liechtenstein	**SD**	Sudan		
DK	Denmark	**LK**	Sri Lanka	**SE**	Sweden		
EE	Estonia	**LR**	Liberia	**SG**	Singapore		

Antivirus System and Method

Technical Field

This invention concerns antivirus protection systems and methods. The invention relates in particular to such systems in which a second (supervisor) processor is added to a first (applications) processor to continuously monitor its operation so as to prevent damage from viruses or software errors.

Bakground Art

With the proliferation of personal computers and of software therefor, there is a tendency for the hardware to become more and more powerful, and for the software packages to become more and more complex. Software packages nowadays take large disk space, in the range of megabytes to tens of megabytes each.

Heretofore, in this new environment, the computer has become less "personal", in the sense that the user cannot supervise the operation of the computer, or have a reasonable measure of assurance about what the computer is actually doing.

The result is that there are occurences of the computer not doing what its owner intended it to do. Rather, sometimes, the computer is doing something else, which causes damage to the user. The user usually learns too late of the damage, and sometimes may not know about it at all.

The very advantages of the computer have become its greatest weakness: Since the computer is fast and powerful, much damage can be done in a very short time. Before the user can intervene, in a time span of miliseconds, a virus can delete hundreds of files and megabytes of memory.

Presently used software packages are very large, including hundreds of files each, in tens of subdirectories, and taking tens to hundreds of megabytes. It is practically impossible for the user to verify all these files to detect a virus or to assess the damage done to these files.

Computers are used for communications. Much information and many programs are available in the INTERNET, for example. How is one to be sure that the information or programs are not contaminated?
The widely used E-Mail messages may include viruses therein.

The problem is much aggravated in computer networks. A network includes tens to hundreds of computers, each vulnerable to attack and capable of transmitting a virus to other computers. Moreover, a network is usually open to access from the outside, so that a malicious person can connect to a network without physically breaking into the victim's facilities. Much harm can be done from far away.

Following are several examples of computer malfunction instances.

1. Computer viruses. These are programs maliciously introduced into the user's computer, with the express purpose of causing damage.

Sometimes the virus erases information stored in the computer. Other times the virus alters the information without the user's permission. Viruses are known to create dummy files or enlarge existing files, which clutter the memory storage unit, so that the user may not have enough memory left for their purposes.

The name "virus" apparently came from a property of these programs to copy themselves to other media like diskettes, and therefrom to other computers, so that the "virus" is actually "spreading" to "contaminate" other computers.

One approach to the computer virus is the "antivirus" software, which stores digital patterns, each characteristic to a known virus. When starting the computer or inserting a diskette, the antivirus program scans the memory and compares the patterns therein with the stored patterns.

An alarm is activated if the patterns correspond, this indicating the presence of a virus.

The big problem with this approach is that only known viruses, that is viruses whose characteristics are stored in the program, can be detected. It appears that new viruses are continuously created, which are not detected nor protected against by the antivirus programs. In this war between virus and antivirus, the virus will always win, by its time lead. Thus, antivirus programs cannot prevent damage from new viruses which are not included therein.

Another problem with this approach is that the memory is only scanned prior to its use. A self-changing virus can become active after it was scanned, while the antivirus is no longer active.

If an antivirus program is used concurrently with the application, then there is a deterioration in performance, since the same processor is used to alternately perform instructions pertaining to the antivirus and the application. Thus, the application will take more time to run.

Moreover, antivirus programs do not indicate the source of the virus, that is which program contains it. At present, the user does not know which program caused the damage or inserted the virus, thus action cannot be taken at source, to stop that source of viruses and/or to claim damage compensation. The required evidence to prosecute the culprit is not available.

Antivirus programs do not help the user regain control of his/her computer. The program only demands to "clean" the virus, without reporting to its user which files are contaminated and what are the consequences of the cleanup, or allowing any choices to the user.

It is believed by the present inventor that software means cannot be used to protect from another software. A virus can tamper with the antivirus program itself, so that further actions by the user and/or updates of the antivirus are meaningless and useless.

Brute force approaches like denying access to disk or forbidding write operations make the computer practically useless, since a large part of the activity with computers is to read/write files and operate on information. Such a measure may be taken for a limited time. When the user can take it no more and disables the protection, the computer is completely vulnerable to attack.

2. Backdoors, for example a communication program including a routine to allow unauthorized access to another's computer by an outsider. Remote diagnostic programs are a needed feature in computers and networks; the same programs can be used by unauthorized people as backdoors to gain access to the victim computer.

Thus, unauthorized person A can remotely connect to the computer of user B. The trapdoor in user's B computer, of which B is not aware, allows A to access confidential files in that computer, to read them or make changes or to otherwise do damage. It is even possible for user B to connect to a remote computer, without that user being aware of the fact that the other party may use that trapdoor during that same session.

Trapdoors can also be used to introduce viruses, possibly with delayed action, or to access privileged information.

It was stated that most of the damage to computers to any firm is done by employees or former employees at that firm.

The inside knowledge gained during employment there may be used to bypass safequards and do damage.

3. Undesired TSRs (Terminate and Stay Resident programs).

A personal computer, during the several seconds it takes to prepare itself at turn-on until it is ready to accept user's commands, may perform tens to hundreds of millions of instructions. Some programs instruct the computer to be left and active in the memory, thus influencing the computer operation thereafter. This is basically a desirable action, for example a TSR to detect the activation of the mouse and to respond accordingly.

Unfortunately, with the advent of viruses, some TSRs come to perform undesired functions. For example, a maliciously introduced TSR may slow down the computer, by repeatedly performing an unnecessary piece of useless code, without user's knowledge.

The end result is that the computer performs slower than is to be expected, thus preventing the user from getting the full performance from the computer.

4. Unorganized or conflicting TSRs .

Nowadays a personal computer contains tens of different programs, each with its own TSR, all competing for the same computer resources and giving sometimes contradicting instructions to the computer. No software provider takes responsibility for the coexistence of the various programs in the computer.

The user is helpless and cannot intervene, since he/she does not know what is actually going on inside the computer.

5. Uninstall of software packages. It is sometimes difficult to remove a package which is no longer desired. Today software packages are large, tens of megabytes each, with hundreds of files being created on disk and changes performed on existing files. It is sometimes difficult to remove files scattered all over a large disk and to undo changes to existing files.

The problem is that the user sometimes is not completely aware of actions performed by the software package during installation. Sometimes, even with the most friendly install routine, the user will not bother to record all the actions performed, for each package installed, this being a tedious task. Human factors are as important as technical ones, and should be given careful attention.

Moreover, means for protection agains viruses should provide reliable protection, without leaving any doubt as to whether the protection device itself is secure or was compromised by a virus.

The protection means should provide the desired protection without a sizable degradation in the overall performance of the computer.

The protection means should perform its tasks without demanding too much of user's attention or intervention. Eventually, any protection means which is not easy to use will be disposed of.

It is an objective of the present invention to provide for an antivirus system and method using a first and a second processor means for overcoming the abovedetailed disadvantages.

Disclosure of Invention

It is an object of the present invention to provide an antivirus system and method using a multiprocessor system comprising a first processor for performing application programs and a second processor for continuously supervising the operation of the first, to protect it from misuse.

The object is achieved by an antivirus system as disclosed in claim 1.
In accordance with the invention a second processor, the supervisor, is attached to the first processor, the application processor, so that the supervisor includes means to continuously monitor the activity in the application processor, to detect viruses and abnormal operations.

The supervisor further includes means for intervening to stop the applications processor and/or to issue a warning when the virus is detected, to prevent damage.

According to a second object of the present invention, the supervisor itself is protected from attack. It has its own computer and memory, which are independent from the application processor and are protected from any attack by a virus in the application processor. Additional means protect from physical attack.

According to a third object of the present invention, the supervisor computer includes a combination of fast monitoring means in hardware, with smart verification means in a programmed device. These means operate together to protect from known viruses as well as from unknown viruses according to their suspect behavior.

According to a fourth object of the present invention, the supervisor method of operation allows both for detection of viruses in real time, and for smart monitoring of sensitive operations without a sizable decrease in performance. Operation at several levels of complexity is disclosed.

According to a fifth object of the present invention, the supervisor performs a smart verification method, to detect potentially dangerous activities.

According to a sixth object of the present invention, means are detailed for the supervisor to detect viruses without slowing down the applications processor.

According to a seventh object of the present invention, the supervisor includes a multisensor unit which monitors everything going on, in and around the application processor, including a plurality of sensors for sensing the various effects indicative of the presence of a virus.

Further objects, advantages and other features of the present invention will become obvious to those skilled in the art upon reading the disclosure set forth hereinafter.

Brief Description of Drawings

The invention will now be described by way of example and with reference to the accompanying drawings in which:

Fig. 1 is a simplified functional diagram, illustrating the attachment of a supervisor computer to an application computer.

Fig. 2 is a simplified electrical diagram illustrating the attachment of a supervisor computer to an application computer.

1

Fig. 3 details the functional structure of supervisor computer

Fig. 4 details the structure of real time monitoring means

Fig. 5 details the omparator structure and operation

Fig. 6 illustrates the structure of monitoring means using digital signature

Modes for Carrying out the Invention

A preferred embodiment of the present invention will now be described by way of example and with reference to the accompanying drawings.

Fig. 1 illustrates the attachment of supervisor computer 2 to an application computer. The application computer, in this simplified functional diagram, includes a Central Processor Unit CPU 11, connected to display means 12, keyboard 13, Input/Output unit (I/O) 14 and memory unit 15.

The application computer is the original computer which provides the computer functions desired by the user, and to which is added the supervisor 2 to ensure that indeed it will perform the desired functions, without the interference of viruses or malevolent programs.

One function of the supervisor 2 is to monitor activity on busses of CPU 11, like data, control and address between CPU 11 and memory 15, and input/output activity between CPU 11 and I/O means 14. Supervisor 2 connects to these busses to watch instructions and check if some forbidden activity is about to take place. It searches for known viruses patterns or privileged instructions which require authorization.

The monitoring is done concurrently with normal operation of the application computer, without slowind it down. Supervisor 2 reads commands and data "on-the-fly" in real time.

Another function of supervisor 2 is to act to stop or prevent forbidden activity, after detecting a virus as mentioned above. This is done by: activating a signal to CPU 11 to Reset processor or bring it to Wait state or stop CPU 11 and put its activities under closer scrutiny or log the activities performed.

A third function of supervisor 2 is to perform protected, direct dialog with the user, using the application computer resources like the keyboard 13 and display 12. Supervisor 2 has direct access to these devices, and it can also immobilize the CPU 11 during the dialog with the user. This is used to reliably notify the user of virus problems, to ask questions regarding permitted operations and to accept instructions from the user, like the subdirectories it is permitted to read and/or write files therein.

Moreover, the information in computer 2 can be updated by reading from a diskette (not shown), for example to update the list of viruses. Again, this is preferably done while CPU 11 is not active, to avoid interference with, or eavesdropping to, these activities by a potential virus or ilegitimate program in the applications processor.

The applications computer is deactivated using, for example, its RESET or HOLD or WAIT while supervisor 2 is using the resources therein like the diskette or keyboard or I/O channel.

Thus, the functions of supervisor 2 is to watch and report, prevent disaster, help recover from problem, let the user know how disaster happened, and who caused it.

The multisensor unit 27 supports the monitoring function of supervisor 2, by providing additional information relating to possible effects of viruses.

Thus, a virus can establish a communication link with an unauthorized outsider using any of a wide variety of media, for example through a wireless or RF link, ultrasonic or sonic or subsonic waves, signals on the power lines etc. High frequency signals can be transmitted over power lines to outside the firm or the user's home.

Other possible links may include existing serial or parallel communication channels, like an RS-232 link to a modem or a local net or a phone dialer. These links may be activated under a virus control without the permission or knowledge of the legitimate user. Other possible links may include optical media including infrared, visible light and/or ultraviolet.

Unit 27 includes a plurality of sensors for monitoring the various media for any potential undesired activity. The user may not be able to otherwise sense these activities which may go on about their computer.

Thus, the antivirus system and method uses a first processor, including CPU 11 and related units, for performing application programs and a second processor 2 for continuously supervising the operation of the first, to protect it from misuse. The supervisor 2 is attached to the application processor, wherein supervisor 2 includes means to continuously monitor the activity in the application processor, to detect viruses and abnormal operations. The monitoring is done in real time.

The supervisor further includes means for intervening to stop the applications processor and/or to issue a warning to user when the virus or abnormal operation is detected, to prevent damage to the application processor.

Fig. 2 details the electrical attachment of a supervisor computer 2 to an application computer, in a simplified block diagram.

The supervisor computer 2 connects, or couples to a first processor, that is the applications computer. The multisensor unit 27 gives the supervisor 2 the ability to monitor the various media around the applications computer, as detailed below.

The applications computer includes the CPU 11, display means 12, keyboard 13, Input/Output unit (I/O) 14, memory unit 15 and other resources 16. All these devices are connected to each other through control/data/address bus 17, as known in the art.

Supervisor 2 connects to bus 17, thus gaining access to all the resources of the application computer. Whereas supervisor 2 monitors activity on the applications computer through bus 17 and exercises control over the application computer if need be, it does not use the memory 15 of the applications computer to store its programs or data.

By including (not shown) its own, separate processor and memory with programs and data, supervisor 2 is protected from attack by virus in the applications computer.

Supervisor 2 includes means to protect from physical attack, tampering with, removal from bus 17. Its board (not shown) is encased in hard plastic, to prevent access to its components. Mechanical means may be included (not shown) to lock to motherboard or bus 17 of applications computer.

Additional physical protection means include the supervisor 2 board being soldered to the connector of bus 17, or the supervisor being produced as an integral part of the motherboard of the applications computer.

In another embodiment, the supervisor 2 is manufactured as an integral part of the CPU 11. This achieves a CPU which is protected from viruses, and is practically impossible to separate between the actual CPU and its protection means.

Thus, the supervisor 2 itself is protected from attack. It has its own (not shown) computer and memory, which are independent from the application processor and are protected from any attack by a virus in the application processor. Additional means protect from physical attack.

Fig. 3 Illustrates one embodiment of the functional structure of the supervisor 2 mentioned in Figs. 1 and 2 above. The supervisor includes a combination of fast, real time monitoring means including units 22, 23, 24 and a slower, smart unit comprising controller 21.

Following is a detailed description of the structure and operation of the supervisor.

The supervisor structure includes the following means:

1. monitoring means, including registers 22 and 23 and comparators 24, to evaluate operation of first processor in real time for detecting abnormal operation, to stop first computer and issue alarm or warning or indication to controller 21. A shift register 22 continuously receives and shifts in real time instructions read in the first, or the supervised, computer. A plurality of comparators 24 each compares the instruction string with the string of a known virus or a predefined suspect behavior, to detect viruses in real time.

2. controller means 21 to: initiate the monitoring means at start-up, take actions when alarm is issued, dialog with user, program/update internal memory, log and analyze activities performed prior to an alarm or a virus attack. A smart analysis is done to detect suspect behaviour, indicative of virus, after receiving indication from monitoring means.

3. internal memory 25 – for virus patterns and forbidden/ privileged instructions, log of activity prior to virus, allowances in each application program (different set of allowances and masks for each application, according to user's instructions).

The memory can be implemented in the controller IC itself or in a separate IC or ICs or on disk, if adequate safeguards are taken to protect that disk area.

4. multisensor unit 27

The bus 17 of the applications computer, including control, data, address is coupled to comparator shift register 22. Various embodiments are possible, with corresponding levels of performance and circuit complexity. The simplest is to couple only the data bus to shift register 22, using part of the control signals to strobe the data in at the correct timing, as known in the art.

Control signals on bus 17 indicate when an instruction is on the bus, whether this is a memory or I/O operation, whether it is a Read or Write. Register 22 can be wired accordingly to accept a new sample for each new instruction, or only for memory read, or for all data bytes on the bus. This embodiment is suitable for recognizing instructions and various routines.

A more complex embodiment reads into register 22 the data together with the address and the control signals. This enables to search for instructions relating to specific addresses in RAM, like reading from the interrupt vectors area or the DOS sections, or writing to these locations, which are privileged locations. This embodiment requires a wider register 22, that is each stage contains more bits.

Register 22 includes a plurality of stages (not shown), each k bits in parallel. As a new sample is read in from bus 17, all the previous samples are shifted one stage to the right. The oldest sample is transferred out of register 22, to log shift register/FIFO 23.

The samples in the various stages of register 22 are output to extended processor bus 220. Thus, bus 220 contains the data bus and optionally also control and address, for a plurality of times: the last sample, the sample a clock ago, then two clocks ago etc...to 100 or several hundred samples.

Bus 220 contains the words or bytes for the last instructions on the bus 17. These instructions are compared in comparator unit 24 with the instructions for a specific virus, or the instructions sequence for a sensitive operation which demands scrutiny by contoller 21. The monitoring unit contains a plurality of comparator units 24, each programmed to detect one virus or privileged instruction, as detailed below. All the comparators 24 operate concurrently in real time. Each comparator 24 includes a string of a specific virus or instruction sequence, and possibly an ignore mask to ignore irrelevant parameters in the instruction string.

The comparators 24 issue an alarm/warning/action on bus 28, which includes busses 241 and 247. Thus, alarm/warning /action bus 28 is used to issue the alarm/warning if a suspect string or instruction was detected. The bus 28 combines with similar busses from the other comparator units, all connected in parallel.

Bus 28 contains action signals, comprising command bus 247, to take immediate action (fast) if a dangerous string is detected, to RESET or HOLD in wait the applications computer for example. Bus 28 also includes the report alarm bus 241, to report to controller 21 that an alarm/warning or other virus-related activity took place. The specific word on bus 241 can indicate the type of action or virus which was detected.

Thus, according to preprogrammed parameters, when an expected instructions sequence is detected in one of the comparators 24, then the application computer can be immediately stopped if necessary, and the controller 21 notified. If a less dangerous instruction is detected, then controller 21 can be notified without stopping or resetting the applications computer.

Supervisor controller 21 includes nonvolatile memory means 25 holding its programs and parameters, like the virus list. This information is protected from access from the applications computer through bus 17. Thus, programs in supervisor computer are protected from access from outside. The programs for controller are not changeable, to prevent tampering with. No software or virus in PC can affect the second processor. No event in PC can change the programs in second computer, including the user or a virus or any program or occurence in PC.

The internal storage is tamper-proof by application processor. Preferably the programs, parameters (whatever influences operation) are stored in internal ROM/PROM/ CMOS RAM/ Flash Memory.

Time/ date unit 26 serves to perform time-sensitive functions. For example, controller 21 can check the number of different files addressed by an application per second. Too many files acessed in a short time is a suspect activity, suggesting a virus. Time can also be used to log activities, to provide evidence for subsequent legal action.

Controller 21 also reads the report activity bus 231, to read past instructions from register 23, so as to reconstruct activity prior to alarm.
Log shift register/FIFO 23 can be longer than register 22, since only the final stage output goes to an output bus 231. It can keep log of thousands to hundreds of thousands of the last instructions. This allows controller 21 to inspect and find what events took place prior to the virus attack, or where the virus come from.

Controller 21 can take direct control over the application computer through bus 217. This bus can include (not shown) lines to Hold that computer inactive, or to Reset it, together with control, data and address lines to gain access to the application computer and its resources, for example using DMA.

Load parameters bus 29 is used by controller 21 to load parameters into comparators 24, each with a different instruction or instruction string and a corresponding "ignore" mask for each byte or bit, and a desired action to take if that string is detected.

It is possible to update the information/parameters in memory 25, while updates are done under controller 21 supervision. Encrypted messages may be used to program new virus patterns. It is preferred not to allow programming controller while the application is operational, but only with applications stopped by controller 21.

In another embodiment, monitoring means includes means (not shown) for computing digital signature or CRC (Cyclic Redundancy Code) and comparing with signature of viruses, instead of directly comparing bytes. This saves hardware. The embodiment is illustrated in Fig. 6. It is possible (not shown) to use one comparator, while multiplexing virus signatures and masks, to save hardware.

Another embodiment (not shown) uses a DSP (Digital Signal Processor) means or other programmed device instead of hardware, to compute signatures or directly compare with string of bytes and/or to perform masking operations. Very fast processors may be used to perform comparison with virus string as detailed above using a microprogrammed implementation of the abovedetailed structure and its operation method, as detailed with reference to shift register 22 and the comparators 24.

Thus, the supervisor computer includes a combination of fast monitoring means in hardware, with smart verification means in a programmed device. These means operate together to protect from known viruses as well as from unknown viruses according to their suspect behavior.

The controller 21 performs the following functions, in addition to the smart verification which is detailed in the following chapter:

1. Loader, at power-up loads all patterns and ignore to all registers from a mass storage like a Flash Memory.

2. Programmer to accept updates, check validity, then write update in nonvolatile memory. Memory is nonvolatile, like flash or cmos or similar, or magnetic. Internal in supervisor.

3. Update programs, data in internal memory. Can be changed only when entered with special format and CRC and/or encrypted, to enable update of virus list, programs etc by responsible provider. Responsible to user as to integrity of program. PC is in reset or wait during this update, so no virus or nonhonest user can watch, record or tamper with program update in second computer.

Supervisor Computer Operation

There are several possible embodiments, from the simple to complex. These are made possible with the structure detailed above, with monitoring unit including registers 22 and 23 and comparators 24 (fast comparison) under the supervision of the controller 21 (smart analysis):

1. Simple operation, virus pattern detection. At power-up the controller 21 loads known viruses into the monitoring means hardware, that is in comparators 24.

During the subsequent operation of the first computer (the application computer or PC or computer network), the monitoring means act to continuously detect viruses and stop the PC to prevent damage. Controller 21 is inactive, except to display the log of instructions prior to alarm, to report to user what happened there.

2. Guided scan protection: the monitoring means is programmed to detect the activity in the application PC of a piece of code being loaded to RAM for execution. When this activity is detected, the application CPU is stopped and the controller 21 is prompted accordingly. The controller 21 then reads all the instructions which are in RAM and ready for execution in the PC, just prior to their execution, by using bus 217.

While the instructions are thus read, the monitoring means reads samples through bus 17 into register 22 as detailed above and searches in real time, in hardware, for all the known viruses which are programmed therein. Thus, even viruses with self-changing code are detected, since this method verifies each piece of code just prior to its execution.

3. Two-stage protection: comprises fast real-time verification using the monitoring monitoring means, and a higher level, slower, smart verification using the controller 21, for sensitive operations.

At power-up the controller 21 loads known viruses pattern as well as sensitive operations which demand further scrutiny, like interrupts or file operations or I/O. The smart verification is detailed below.

During normal operation thereafter, if a virus is detected then the monitoring means act promptly to stop the applications CPU through bus 247, to prevent damage. If a sensitive operation is detected in the monitoring unit, then the CPU is temporarily stopped and the controller 21 is prompted through bus 241 to perform a smart, in-depth analysis of the situation.

This may be done in addition to controller 21 acting to report virus activity, as for the simple operation detailed above. This embodiment includes the simple hardware protection and further, the second level of verification/protection.

Advantage: protects from attack by yet unknown viruses, with unknown patterns, by detecting suspect activities. These are activities expected from viruses, like writing to files, changing files and more.

Rational: smart tests are difficult to perform in hardware, but are easier to implement in software, in the programmed controller. This, however, takes time and cannot be performed in real time, while the PC operates as normal. According to the present invention, the smart tests are performed for sensitive operations in the PC, which operations are slower than the rest. For example, disk operations are slow since they involve the mechanical movements of the disk head and platter, and take time in the order of milliseconds.

The PC is preferably stopped during the smart test performance.
Thus, the additional time it takes to perform the smart test has no considerable effect on the overall performance of the PC, since smart test can be peformed in about 10 – 100 microseconds, this time being so much shorter than the sensitive operation in the PC, that the overall performance is not much affected.

The smart test can be peformed is such a short time, for example using a 16-bit controller like the Intel 80196.
Similarly, I/O operations like a modem have a relatively slow bit rate, and take overall time in the order of seconds to minutes. Thus, a smart verification prior to the actual performance of the I/O function has no sizable effect on overall PC performance.

4. Active protection: may be performed in addition to the two-stage method. The controller 21 initiates activities in the PC, which are expected to stimulate or provoke viruses into action. Thus the virus is detected, by its activity.
The controller creates a controlled environment, wherein the activity of the PC can be completely predicted; any deviations from the expected activity are the result of a virus, thus the virus is detected before it has a chance to attack.
This is an offensive method of operation, wherein the protection means strikes first to provoke the virus, then to detect it and neutralize it.

Thus, the supervisor method of operation allows both for detection of viruses in real time, and for smart monitoring of sensitive operations without a sizable decrease in performance. Operation at several levels of complexity was disclosed.

Smart Verification Method

This method is performed by controller 21, after it is prompted through bus 241 that a sensitive instruction or sequence of instructions took place. It includes various routines for analyzing the activities in the PC from several aspects.

1. Monitors execution since init or reset. Logs TSR loading, disk access, communications access, especially in the initial stages of the application computer or PC operation. Logs autoexec.bat and config.sys execution, with the actual performance taking place.

2. Pays attention to special instruction or access to specific locations like access to directory or to boot sector, writing to exe, com , bat or sys files, reading too many different files in a short time, accessing files outside a permitted subdirectory, writing to files without some processing or user input (without apparent reason or prompting to do so).

3. Logs install or setup performance, to allow delete install

4. Logs TSR installation, and verifies TSR execution in actual life

5. Tracks virus to source; reports which program initiated, introduced virus in our PC, to take legal action again those responsible for virus. Logging the virus activity and tracing it to source can provide the required evidence to prosecute the culprit.

6. Communicates with user through keyboard, display, diskette, I/O

7. Keeps records in PC disk. May encrypt to preserve on disk. Prevents PC from access to those areas, like from a virus.

8. Logs creation of files on disk. In previous art computers, various applications create *.tmp, or temporary files, of size 5 – 15 megabytes, which clutter disk. If deleted, may interfere with applications. If this is malicious – user may want to know which program did it. If it is an error by programmer – user may want to know , to ask why there are retainted files to clutter disk. A notification may be issued like:

"you forgot a file or 100 files ... in my computer.." .

9. Reports to user by RS–232 or other I/O, while keeping PC inactive to prevent a virus therein from tampering with the transfer or to log it, for later misuse of information, keys or communication protocol.

10. Define illegal activities, or those which require user's manual approval. If detected– stop it and report. for example– request of information by LAN. Prompt from LAN or I/O or Internet to read file or to change it or delete information.

11. Read part of each TSR loading at init/reset into comparator units, to check how often they execute. If it is done too ofter– maybe virus. Report all TSRs being loaded; by whom; memory RAM occupied.

12. Log, monitor disk/diskette access. Too often is unnecessary, results in wear and tear of mechanical parts. Maybe reading information which is not really necessary, or doing damage to many files.

13. Log, monitor access to too many files at once, during short time period. In normal use, computer works with limited number of files. Monitor access to too many subdirectories. User can limit operation to several or few subdirs or to specific areas of disk.

14. Define forbidden combination of activities: ie communications + access to specific subdirs. or comm + printing. or comm + access to other than one subdir, where we deposited a file to read or write. Then load these to comparator units 24, to report back to controller 21 if detected.

15. Special adaptive comparator unit (or several such): freezes a pattern of executed instructions from SR 22 to registers, to compare with itself later on. Detects a virus which creates dummy loops, repetitive execution of unnecessary programs. Method of use: From time to time, at random, controller 21 reads pattern of instructions now executing through bus 231, and load through bus 29 into comparators 24.

The comparator then checks for repetitions of this patterns, and reports to controller. If the pattern repeats too often, it may be a virus. If not, then after a set time a new instructions string is read at random and compared with thereafter.

This solves the problem of a virus slowing down computer operation by initiating it to do unnecessary, dummy commands. It performs an adaptive monitoring and detection of unnecessary repetitions of code.

16. Correlator between program executing and disturbances monitored by sensors (multi-sensor unit 27). If there is correlation – stop and report to user. The user may be unaware that activity in his/her computer are a result of commands received from the LAN or Internet or a bug operated by radio for example, or with ultrasonic waves.

Thus, the supervisor performs a smart verification method, to detect potentially dangerous activities.

Fig. 4 details the structure of real time monitoring means in one embodiment, in simplified block diagram. This is the monitoring means hardware, used to monitor without slowing down the PC or application computer.

Data multiplexer and latches means 222 is used to read information from the applications computer bus, including data bus 172, control bus 173 and address bus 174. These are part of control/data/address of applications computer 17. Means 222 may read all or part of these busses. The PC bus uses data, address, control on 8 or 16 or 32 bit bus. Means 222 aligns the bus by bytes for proper analysis of programs execution, or brings into other uniform form the input samples.

The result is samples of instruction/data bus 223, which are transferred to comparator shift register 22. After input, these samples are shifted to present an instructions sequence for the comparators 24, to compare with existing viruses.

Bus 223 may contain, in addition to data and commands, also the status, strobe etc– the CPU controls issued on the bus. This provides the context of data issued or read: rd/wr, IO/memory, bus width.

These are specific to each CPU like the Intel 386 or Pentium, Motorola 68020, Analog Devices DSP 21020, 21060, and should be interpreted as such.

The shift register includes two parts:
comparator shift register 22, including stages like 224, 225. It shifts the data, commands all the time to the right, then to output bus 229;
and
log shift register/FIFO 23 , which shifts all the time as well, with its output bus 231 connected to controller (not shown).

Register 22 is used for comparison with patterns to search. It is small, about 100– 200 samples with outputs at every stage/sample (internal to supervisor). The first output is the data bus latest output C0 226, with subsequent outputs for previous samples. Thus, data bus i–th output Ci 227 represents one of the n stages in SR 22, and data bus earliest output Cn 228 is the oldest sample in register 22. The busses 226, 227, 228 comprise the abovementioned bus 220.

Register 23 keeps log of last operations, to track virus to source, by reconstruction of activity performed prior to virus attack/detection large, about 10 – 100 ksamples. Contains only output total 231, to controller 21.

Output busses from register 22, including bus 226, 227, 228 are connected in parallel (the same data) to a multitude of comparator units 24, each including:

1. instruction/data reference register 31, which is fixed after initial loading from controller. It includes a plurality of stages, corresponding to the stages of register 22, and with output bus at each stage, of which are shown the reference bus latest value R0 316, the reference bus i-th value Ri 317 which represents one of the n stages in register 31, and the reference bus earliest value Rn 318. The load reference bus 291, part of parameters bus 29, is used to load the initial values into register 31 at power-up.

This programmed structure allows for flexible operation, to load various viruses or instruction strings to be searched for.

2. a plurality of comparator stages in parallel. Illustrated is the comparator first stage 331, for last instruction value. It compares latest output C0 226 with corresponding reference R0 316, using AND mask from bus M0 326. The comparison is bitwise, that is each of k bits of bus C0 226 is compared with a corresponding bit of bus R0 316, with mask bit from M0 326 being applied to allow or ignore the result, then all the partial bit results are collected to result in result of comparison 361, which is detailed below.

Similarly the comparator stage 333, is used for earlies instruction value. Compares earliest output Cn 228 with corresponding reference Rn 318, using AND mask from bus Mn 328. The result of comparison 363 is the output.

AND gate 334 sums up all the results of comparison 361, 363 and all the results in between (n in all), to issue alarm strobe 335 if all the comparison results are positive, indicating the complete detection of a virus string.

3. Mask register 32 . Is fixed after initial loading through load mask bus 292, part of parameters bus 29, at power up. Like register 31, there are outputs at each stage, illustrated with mask bus latest value M0 326, mask bus i-th value Mi 327 represents one of the n stages in register 32, and mask bus earliest value Rn 328.

4. action register 34 holds a digital value indicating the type of action to take, which is related to the virus or event stored in register 31. The action may include Reset the CPU, Hold or only a warning to the controller 21 (see Fig. 3) of the supervisor processor. It is loaded through action bus 293, part of parameters bus 29, used to load the action parameters at power-up, from controller 21 (see Fig. 3).

Alarm/warning /action bus 28 is used to issue the alarm/warning if a suspect string or instruction was detected.

It is combined with similar bus from other comparator units (not shown) operating concurrently with that detailed in Fig. 4, and with their bus 28 connected in parallel to this one to form report alarm bus 241, to report to controller 21 that an alarm/warning or suspect activity took place.

Operation of the unit: This is a pipeline structure, with each instruction or sample of a long string being compared concurrently with all the other samples, using the comparator stages 331 ... 333. Thus, for each new instruction entered into register 22 from bus 17, that instruction together with the previous instructions, are compared with an instruction string pertaining to a virus or sensitive instruction stored in register 31, using mask in register 32.

The operation of the unit is synchronous, in that all the stages of register 22 are shifted at the same time, and the operation of the comparators is synchronized with that shift.

Thus, it was detailed how a string of bytes/ instructions are compared with a reference, by sliding the instructions intercepted from the PC busses past the fixed reference in register 31, using register 22.

What is compared, is shifted in SR 22 – only data or only instructions or also (optional) address or also (optional) control bus. Address information in register 22 allows to relate to specific address range, like interrupt vectors in RAM of PC, or to first instructions (from fixed address) after RESET.

Control information in register 22 allows to relate, or wait for specific instruction types, like only READ, or READ and I/O, or READ and MEMORY, or WRITE and I/O, or DMA, or other combinations.

Control of CPU in applications processor, examples for several CPUs:

1. For the Intel Model i486, or 80486, used in Personal Computers (PC) "compatibles":

RESET – the reset input forces the CPU to abandon all tasks, and restart from the beginning, as in power-up. Can be used where real danger is eminent, and no risks can be taken to preserve status or tasks in progress

HOLD – the hold input causes the CPU to float most of its output and input/output pins, thus allowing access to the supervisor to the address, control and data busses. That is, full control over the PC and its resources. After deactivating the HOLD signal, the CPU will continue its tasks as usual.

To float the outputs means that the outputs go into a tri-state or high impedance state, allowing other devices to control the logic state for the bits on the bus, either 1 or 0.

BOFF – the backoff input forces the CPU to float its bus in the next clock, having an effect similar to HOLD.

2. For the Intel Model Pentium, used in Personal Computers (PC) "compatibles":

RESET – the reset input forces the CPU to abandon all tasks, and restart from the beginning, as in power–up. Like in i486.

HOLD – the Hold Request input causes the CPU to float most of its output and input/output pins.

BOFF – the Back Off input forces the CPU to float its bus in the next clock, having an effect similar to HOLD.

BRDY – indicates that the external device is ready to transfer data.

3. For the Motorola Model 68020 CPU:

RESET – the reset input forces the CPU to abandon all tasks, and restart from the beginning, as in power–up.

HALT – this input stops all processor bus activity, and the bus is floated, to tri–state.

Mask bytes example, for Intel 8086/80486 family:

Structure of instruction "Jump within segment or group" :

Three bytes: Op Code, Disp Low , Disp High ;

Op Code= E9 hexa

Suppose that we aim to detect the "Jump" instruction, where the actual address is irrelevant. Maybe in different computers will load to different addresses. Then the first byte is enabled, and the next two bytes are completely disabled or masked out.

The result: any program including the "Jump" instruction of this type, with whatever parameters, will be detected reliably.

Mask bits example, for Intel 8086/80486 family:

Structure of instruction "Jump on condition" :

Two bytes: Op Code, Displacement ;

Op Code= 70 hexa Jump if overflow

Op Code= 71 hexa Jump if no overflow

Op Code= 72 hexa Jump if below

Op Code= 73 hexa Jump if above

Suppose we desire to detect all of these instructions with one comparator unit. The difference between the op codes is in the lowest two bits, (D1 D0) .

By using a mask 1111 1100 binary and an AND operation with the opcode, the lowest bits are masked out, to be always zero.

The masked opcode is the same for the four instructions, which can be detected with one comparator. Compare with 70 hexa.

If the displacement is irrelevant, then all its bits can be masked out as well (for example by performing AND with 0000 0000 binary).

Thus, means are detailed for the supervisor to detect viruses without slowing down the applications processor.

Fig. 5 details an embodiment of the comparator structure and operation. It details, for example, one embodiment of comparator 331, mentioned with reference to Fig. 4 above. Comparator 331 operates on busses C0 226, R0 316 and M0 326, each k bits wide latest output C0 226, the corresponding reference R0 316 and mask from bus M0 326.

Fig. 5 details the operations on one bit, say bit j. This is representative of the operation of the other bits as well.
One bit of the instruction C0(j) 412 is compared with one bit of the reference R0(j) 413, in XOR gate 41. It compares latest output C0 226 with corresponding reference R0 316, using AND mask from bus M0 326.

The comparison is bitwise, that is each of k bits of bus C0 226 is compared with a corresponding bit of bus R0 316, with mask bit from M0 326 being applied to allow or ignore the result, then all the partial bit results are collected to result in result 361.

The operations on one bit, say bit j, are detailed. This is representative of the operation of the other bits as well.
Thus, one bit of the instruction C0(j) 412 is compared with one bit of the reference R0(j) 413 in XOR gate 41. The output 414 of gate 41 is zero if the bits are equal (either both are 0 or both are 1 logic).
If the mask bit M0(j) 423 is HIGH or ENABLE, then AND gate 42 is transparent, so that its output 424 is identical to signal 414. Similarly, the other comparators (not shown) operate on the other bits of the busses C0, R0, M0 to issue the other input lines 425 to NOR gate 43.

If, and only if, all these input lines 424 and 425 are at ZERO state, then the output 361 of NOR gate 43 goes HIGH, indicating an ALARM or identity for that stage in comparison.

The above description relates to a bit for which the corresponding mask bit 423 is ENABLE, or M0(j)= HIGH. If the mask state is IGNORE or MASK, that is ZERO, then the output 424 of AND gate 42 is always ZERO, regardless of the result of the comparison in gate 41. Thus, the bit j is ignored and assumed equal to the reference, to allow the issuing of an ALARM if the other bits (those which are not ignored) are equal to the reference.

The result of comparison 361 at the output of NOR gate 43 is combined (not shown) with corresponding results from the other stages of comparison, to arrive at a decision regarding a specific virus pattern which is sought after.

The logic circuit of Fig. 5 and the corresponding explanation are just one embodiment of the bitwise comparison process.
Other embodiments will become apparent to persons in the art, like a PAL or FPLA or microcontrolled implementation to perform logical operation or a multiplexed comparison to perform sequential operation on the bits and/or the bytes or word of the relevant busses.

In another embodiment of the abovedetailed structure and method, a digital signal processor like the ANALOG DEVICES INC. DSP21000 family may be used to perform the bitwise logic and other functions as detailed above.

Fig. 6 details another structure of monitoring means, using digital signatures in lieu of direct comparison of all samples of an instruction string.

Data multiplexer and latches means 222 reads instructions from the input bus and generates instruction/data bus 223, which is transferred to comparator shift register 22, and thence to log shift register/FIFO 23. These registers shift all the time, to move the instructions past the comparation unit. The log shift register/FIFO output bus 231 is connected to the controller (not shown).

Thus, for example, register 22 outputs data bus latest output C0 226, and previous samples including data bus i-th output Ci 227 which represents one of the n stages in SR 22, and data bus earliest output Cn 228.

There are also a multitude of comparator units operating concurrently, each receiving the outputs from register 22 in parallel, and each including:

1. signature computing means 51, which receives a data bus 512 from SR 22 and a mask bus 513 from a register (not shown). The output is issued on the digital signature bus 515.

2. comparator 52, compares signature on bus 514 with reference of virus or other event, stored in signature reference register 53 . This is a fixed value, after initial loading. It is loaded through load signature reference bus 291, part of parameters bus 29.

The mask register (not shown) is serial or parallel, as known in the art. It is fixed after initial loading. An alarm strobe 335 is issued (active) if the signatures correspond, indicating the complete detection of a virus string. The alarm strobe 335 connects to an action register (not shown) similar to that in Fig. 4, or similar.

The comparator unit includes a plurality of such comparators, each with a signature computing means 51, comparator 52 and reference 53, and each issuing an alarm strobe 335.

Each may issue a different type of Alarm or Warning or Notice, as programmed by the controller (not shown) in the supervisor processor. All the comparators operate concurrently on the data/instructions supplied to all of them, in parallel, from SR 22.

Example of use of digital signatures:

Time to error – for 200 MHz clock, that is, one comparison and decision is performed each 5 nanoseconds interval.

Time to error: until the accumulated probability of error Pr is Pr=0.5. That is the probability for at least one error (the probability that not a single error occurred is too = 0.5), see Table 1.

Table 1

Number of bytes	Max. value 2^n	Probability of one error	Time to error, seconds	Time to error, years
2	65536	1.52E-05	1.63E-04	5.19E-12
3	1.67E+07	5.96E-08	4.19E-02	1.33E-09
4	4.29E+09	2.32E-10	11.	3.40E-07
5	1.09E+12	9.09E-13	2748.	8.71E-05
6	2.81E+14	3.55E-15	703687.	2.23E-02
7	7.20E+16	1.38E-17	1.80E+08	5.7
8	1.84E+19	5.42E-20	4.61E+10	1462.

Thus, using a signature of eight bytes, the 50% cumulative probability of error is achieved after continuous operation for 1,462 years, at a clock of 200 Megahertz. Thus signatures may be used to achieve a very reliable verification, while concurrently achieving a significant saving in cost and circuit complexity.

According to another aspect of the present invention, the supervisor includes a multisensor unit 27 which monitors everything going on, in and around the application processor, including (not shown) a plurality of sensors for sensing the various effects indicative of the presence of a virus.

The multisensor unit– monitors everything going on, including processor commands, I/O port activity, RS–232, modem/telephone output, ethernet, Internet, LAN, optical (visible/IR/UV), ultrasonic/sonic/subsonic, RF and microwaves, electrical and magnetic fields, disturbance on power line of 50 Hz or 60Hz. Its function: look everywhere, every medium is suspect; anything moving, bring in for inspection.

Part of the sensors are fixed, to continuously sense in and around the PC. Part of the sensors are portable, detachable, like a pen for example, so as to allow the user to bring it to suspect areas or busses.

Various implementations and other embodiments of the present invention will become apparent to persons skilled in the art upon reading the abovedetailed disclosure.

It will be recognized that the foregoing is but one example of an apparatus and method within the scope of the present invention and that various modifications will occur to those skilled in the art upon reading the disclosure set forth hereinbefore.

Claims

What is claimed is:

1. An antivirus protection system comprising a second processor attached to a first processor for monitoring its performance and intervening if predefined behaviour thereof is detected, wherein said second processor includes means for continuously supervising the operation of the first processor to detect virus-related activities therein by comparing actual performed instructions in the first processor with instruction sequences corresponding to known viruses or to predefined suspect behaviour therein, and to stop said activity in the first processor after its detection.

2. The antivirus system according to claim 1, further including means for protection from attack by virus in said first processor and including a separate computer and memory, which are independent from said processor.

3. The antivirus system according to claim 1, wherein said supervising means includes a combination of fast monitoring means in hardware, with smart verification means in a programmed device, with these means operating together to protect from known viruses as well as from unknown viruses according to their suspect behavior.

4. The antivirus system according to claim 1, further including a plurality of sensors to detect suspect activity in various media like radio frequency or wireless RF, serial or parallel communication channels, ultrasound, sonic or subsonic waves, power lines and/or optical media including infrared, visible light and/or ultraviolet.

5. An antivirus multiprocessor system comprising a first processor for performing application programs and a second processor for continuously supervising the operation of the first, wherein said second processor is connected to the bus of said first processor and includes means to monitor activity of the first processor to detect virus-related activities therein by comparing actual performed instructions in the first processor with instruction sequences corresponding to known viruses or to predefined suspect behaviour therein, and to stop said activity in the first processor after its detection.

6. The antivirus system according to claim 5, further including means for protection from attack by virus in the first processor and including a separate computer and memory, which are independent from said processor.

7. The antivirus system according to claim 5, wherein said supervising means includes a combination of fast monitoring means in hardware, with smart verification means in a programmed device, with these means operating together to protect from known viruses as well as from unknown viruses according to their suspect behavior.

8. The antivirus system according to claim 5, further including a plurality of sensors to detect suspect activity in various media like radio frequency or wireless Rf, ultrasound, sonic or subsonic waves, power lines and/or optical media including infrared, visible light and/or ultraviolet.

9. In a multiprocessor system, an antivirus protection method including the steps of:

A. connecting a second processor to a first applications processor;

B. using the second processor to continuously monitor the activities performed on the first processor and to compare to predefined forbidden activities; and

C. when the second processor detects a forbidden activity taking place in the first processor, then the second processor takes predefined actions to prevent damage to the second or applications processor.

10. The antivirus protection method according to claim 9, further including in step (B) the monitoring by the second processsor of a multisensor unit connected thereto.

11. The antivirus protection method according to claim 10, wherein the multisensor unit includes a plurality of sensors to detect suspect activity in various media like radio frequency or wireless Rf, ultrasound, sonic or subsonic waves, power lines and/or optical media including infrared, visible light and/or ultraviolet.

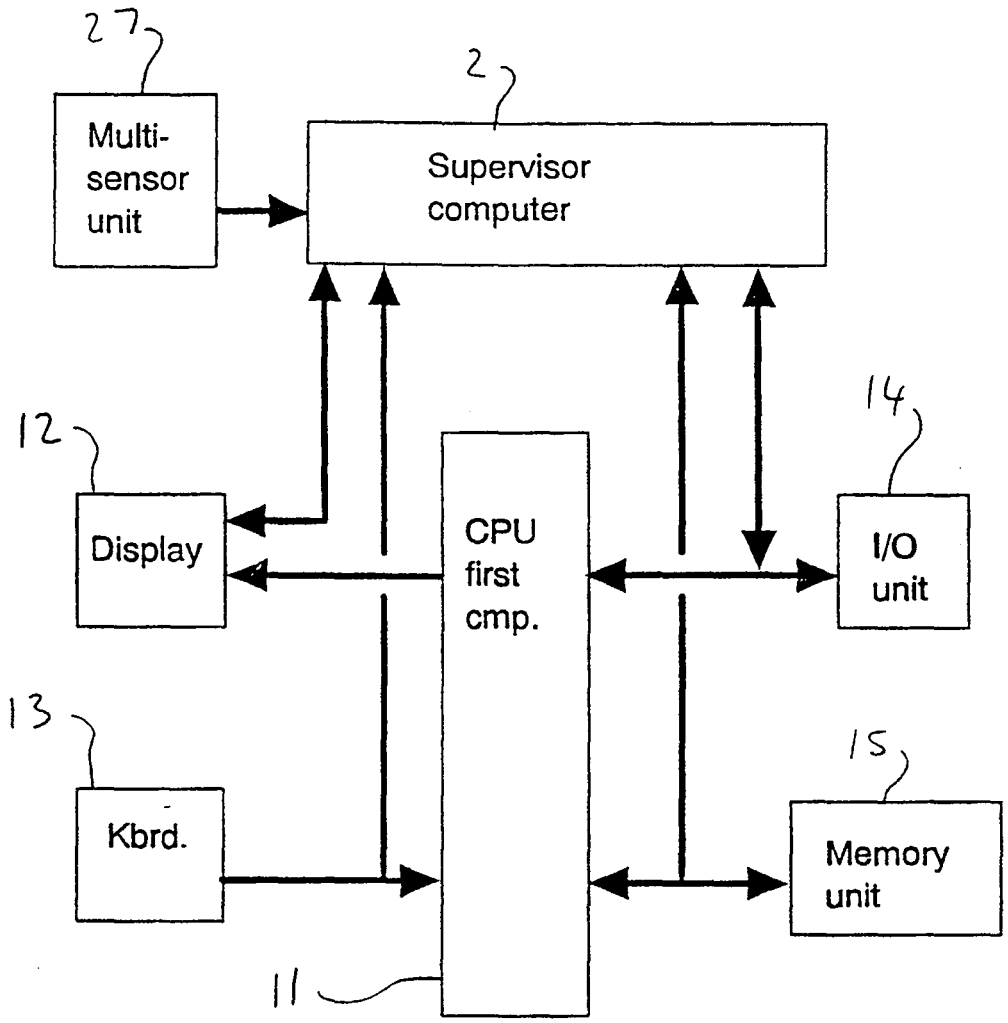
27
Multi-
sensor
unit
2
Supervisor
computer
12
Display
CPU
first
cmp.
14
I/O
unit
13
Kbrd.
15
Memory
unit
11

Fig. 1

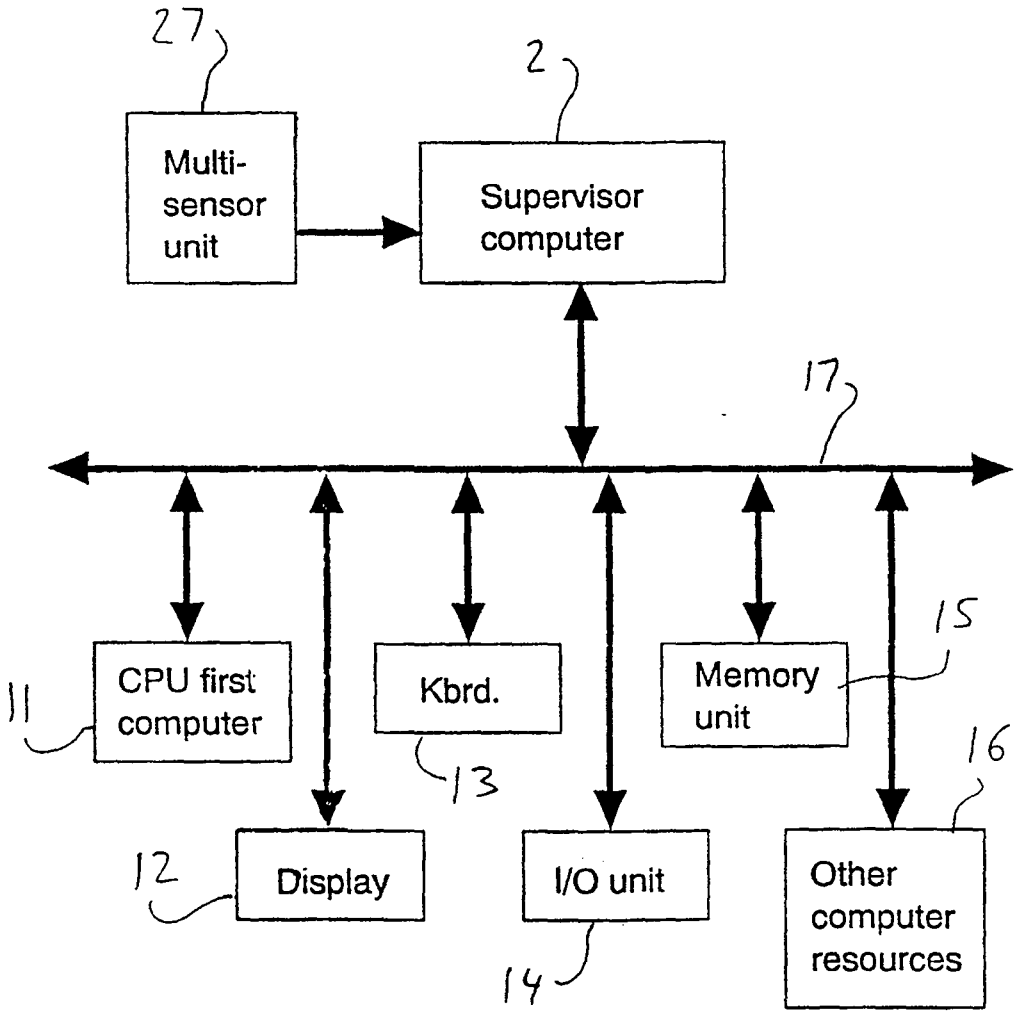
27
Multi-sensor unit
2
Supervisor computer
17
11
CPU first computer
Kbrd.
13
Memory unit
15
16
12
Display
I/O unit
14
Other computer resources

Fig. 2

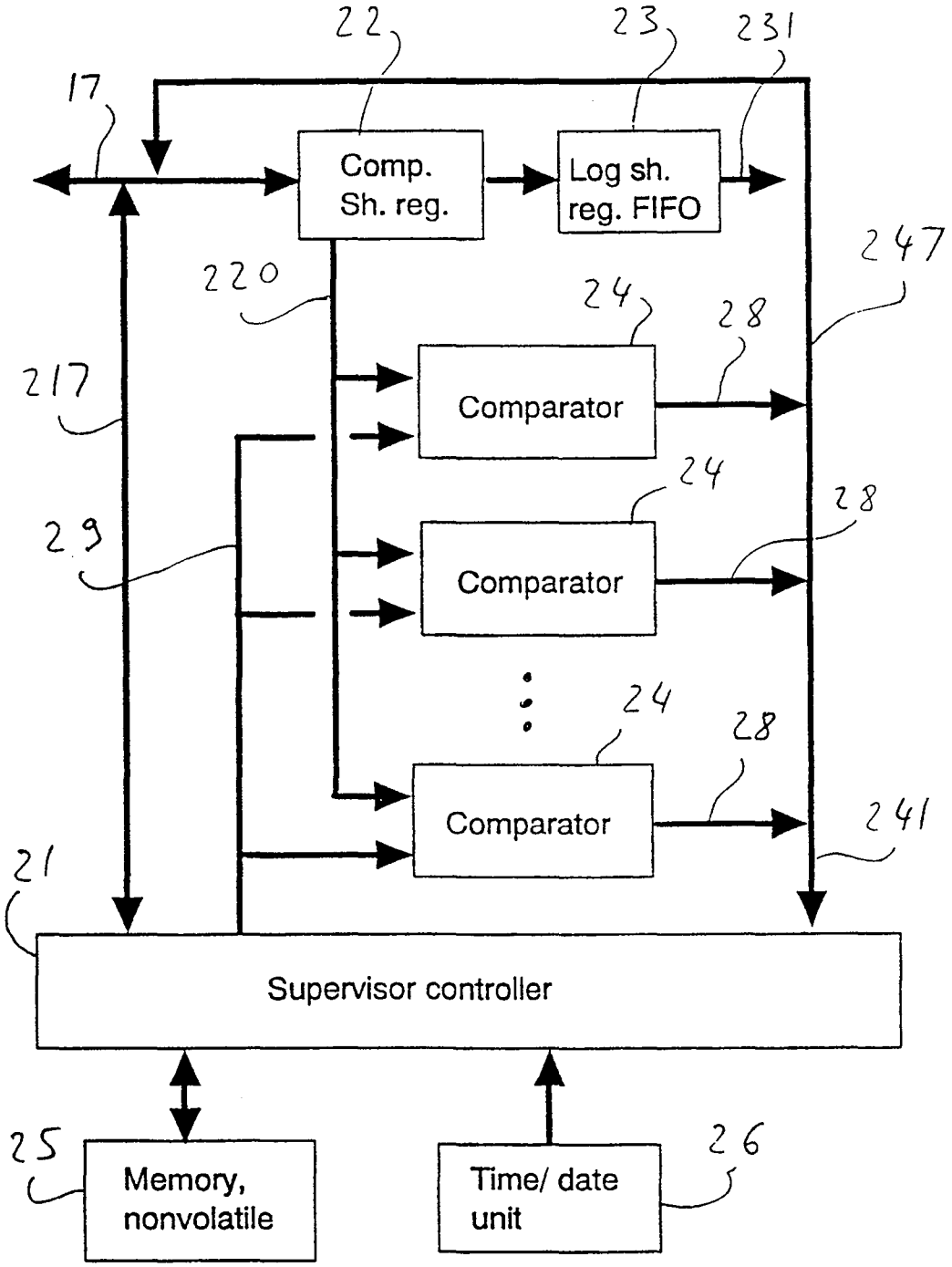
22
23
231
17
Comp.
Sh. reg.
Log sh.
reg. FIFO
247
220
24
28
217
Comparator
24
28
29
Comparator
24
28
Comparator
241
21
Supervisor controller
25
Memory,
nonvolatile
Time/ date
unit
26

Fig. 3

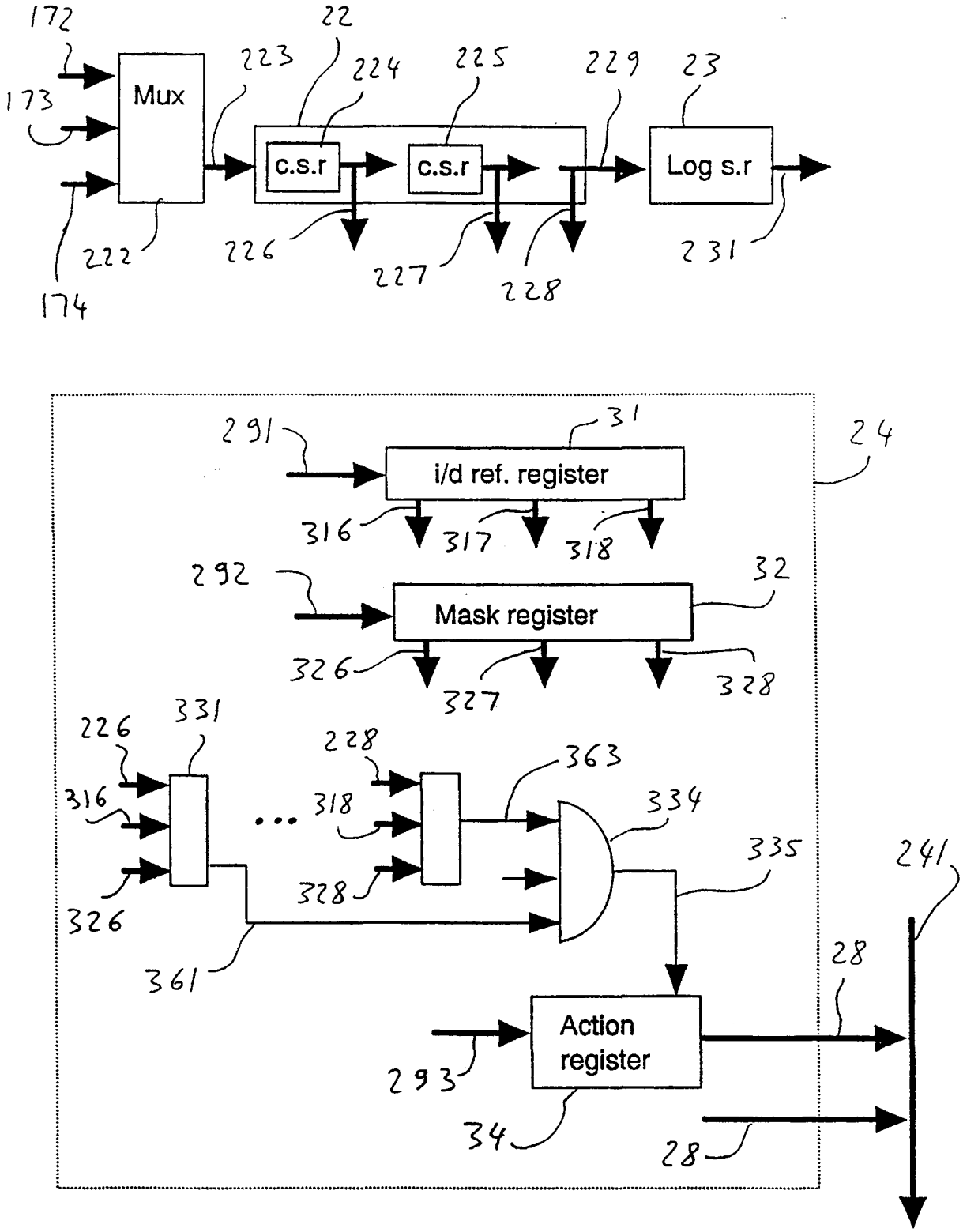
172
173
174
Mux
222
223
22
224
225
c.s.r
c.s.r
226
227
228
229
23
Log s.r
231
24
291
31
i/d ref. register
316
317
318
292
32
Mask register
326
327
328
226
331
316
326
361
228
318
328
363
334
335
241
28
Action register
293
34
28

Fig. 4

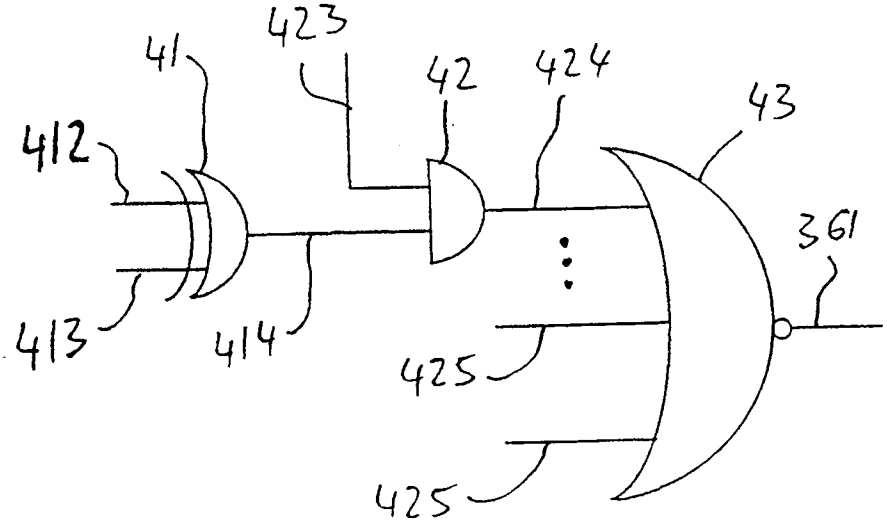

Fig. 5

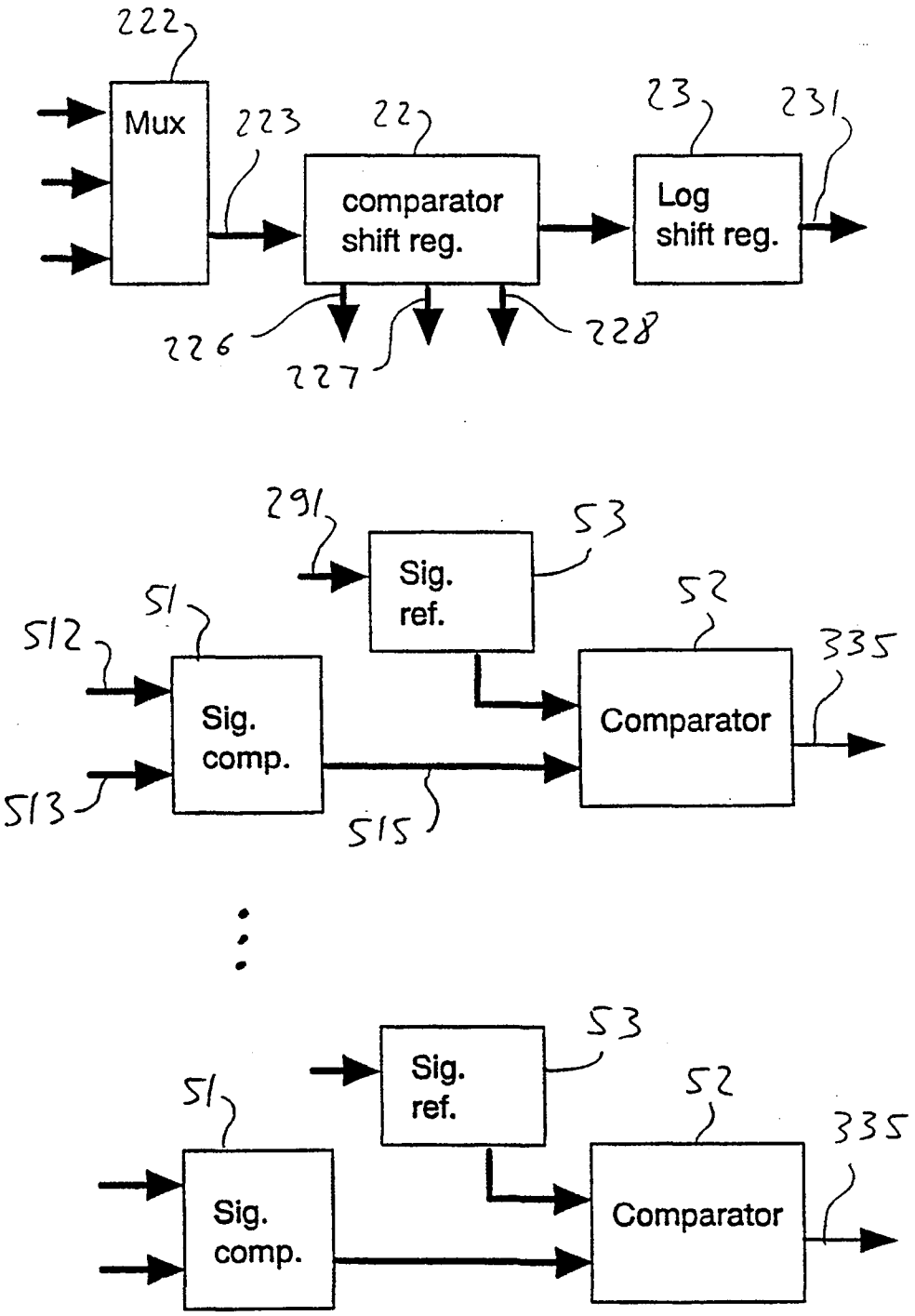
222
Mux
223
22
comparator shift reg.
23
231
Log shift reg.
226
227
228
291
53
Sig. ref.
51
512
52
335
Sig. comp.
Comparator
513
515
53
Sig. ref.
51
52
335
Sig. comp.
Comparator

Fig. 6

PCT

WORLD INTELLECTUAL PROPERTY ORGANIZATION
International Bureau

INTERNATIONAL APPLICATION PUBLISHED UNDER THE PATENT COOPERATION TREATY (PCT)

(51) International Patent Classification 6 : G06F 13/00, H04K 1/00

A3

(11) International Publication Number: WO 98/45778

(43) International Publication Date: 15 October 1998 (15.10.98)

(21) International Application Number: PCT/IL98/00170

(22) International Filing Date: 8 April 1998 (08.04.98)

(30) Priority Data:
120632 8 April 1997 (08.04.97) IL

(71)(72) Applicant and Inventor: ZUTA, Marc [IL/IL]; Ben Yehuda Street 19, 49373 Petah Tikva (IL).

(81) Designated States: AL, AM, AT, AU, AZ, BA, BB, BG, BR, BY, CA, CH, CN, CU, CZ, DE, DK, EE, ES, FI, GB, GE, GH, GM, GW, HU, ID, IL, IS, JP, KE, KG, KP, KR, KZ, LC, LK, LR, LS, LT, LU, LV, MD, MG, MK, MN, MW, MX, NO, NZ, PL, PT, RO, RU, SD, SE, SG, SI, SK, SL, TJ, TM, TR, TT, UA, UG, US, UZ, VN, YU, ZW, ARIPO patent (GH, GM, KE, LS, MW, SD, SZ, UG, ZW), Eurasian patent (AM, AZ, BY, KG, KZ, MD, RU, TJ, TM), European patent (AT, BE, CH, CY, DE, DK, ES, FI, FR, GB, GR, IE, IT, LU, MC, NL, PT, SE), OAPI patent (BF, BJ, CF, CG, CI, CM, GA, GN, ML, MR, NE, SN, TD, TG).

Published
With international search report.
Before the expiration of the time limit for amending the claims and to be republished in the event of the receipt of amendments.

(88) Date of publication of the international search report:
30 December 1998 (30.12.98)

(54) Title: ANTIVIRUS SYSTEM AND METHOD

(57) Abstract

In an antivirus multiprocessor system, a second processor (2) is attached to a first processor (11) for monitoring its performance and intervening if predefined behaviour thereof is detected. The second processor (2) includes means for continuously supervising the operation of the first processor (11) to detect virus-related activities therein by comparing therein actual performed instructions in the first processor (11) with instruction sequences corresponding to known viruses or to predefined suspect behaviour, to prevent damage to the application processor. A plurality of sensors is used to detect suspect activity in various media like radio frequency or wireless RF, serial or parallel communication channels.

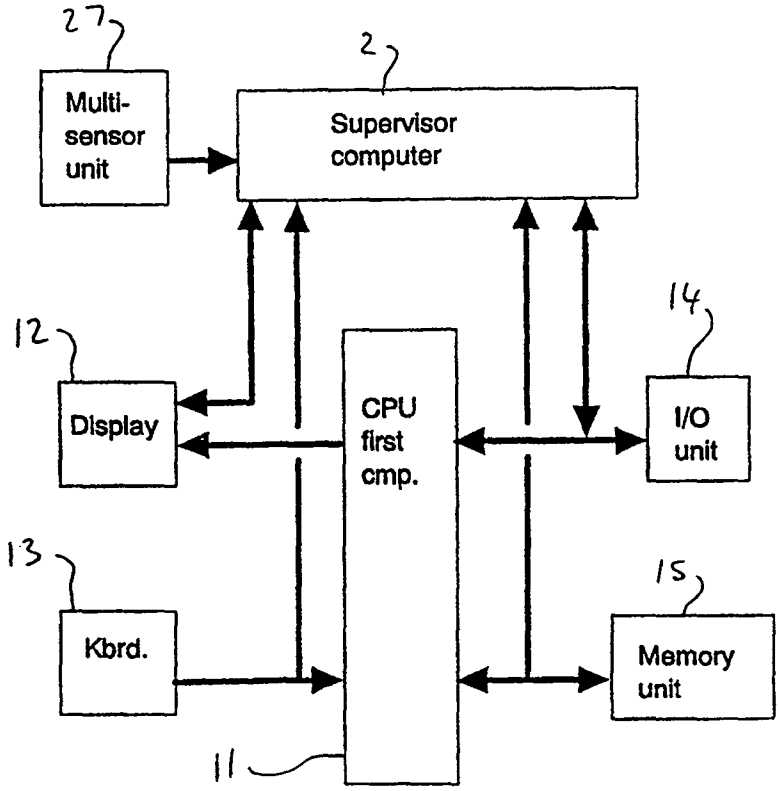

FOR THE PURPOSES OF INFORMATION ONLY

Codes used to identify States party to the PCT on the front pages of pamphlets publishing international applications under the PCT.

AL	Albania	**ES**	Spain	**LS**	Lesotho	**SI**	Slovenia
AM	Armenia	**FI**	Finland	**LT**	Lithuania	**SK**	Slovakia
AT	Austria	**FR**	France	**LU**	Luxembourg	**SN**	Senegal
AU	Australia	**GA**	Gabon	**LV**	Latvia	**SZ**	Swaziland
AZ	Azerbaijan	**GB**	United Kingdom	**MC**	Monaco	**TD**	Chad
BA	Bosnia and Herzegovina	**GE**	Georgia	**MD**	Republic of Moldova	**TG**	Togo
BB	Barbados	**GH**	Ghana	**MG**	Madagascar	**TJ**	Tajikistan
BE	Belgium	**GN**	Guinea	**MK**	The former Yugoslav Republic of Macedonia	**TM**	Turkmenistan
BF	Burkina Faso	**GR**	Greece			**TR**	Turkey
BG	Bulgaria	**HU**	Hungary	**ML**	Mali	**TT**	Trinidad and Tobago
BJ	Benin	**IE**	Ireland	**MN**	Mongolia	**UA**	Ukraine
BR	Brazil	**IL**	Israel	**MR**	Mauritania	**UG**	Uganda
BY	Belarus	**IS**	Iceland	**MW**	Malawi	**US**	United States of America
CA	Canada	**IT**	Italy	**MX**	Mexico	**UZ**	Uzbekistan
CF	Central African Republic	**JP**	Japan	**NE**	Niger	**VN**	Viet Nam
CG	Congo	**KE**	Kenya	**NL**	Netherlands	**YU**	Yugoslavia
CH	Switzerland	**KG**	Kyrgyzstan	**NO**	Norway	**ZW**	Zimbabwe
CI	Côte d'Ivoire	**KP**	Democratic People's Republic of Korea	**NZ**	New Zealand		
CM	Cameroon			**PL**	Poland		
CN	China	**KR**	Republic of Korea	**PT**	Portugal		
CU	Cuba	**KZ**	Kazakstan	**RO**	Romania		
CZ	Czech Republic	**LC**	Saint Lucia	**RU**	Russian Federation		
DE	Germany	**LI**	Liechtenstein	**SD**	Sudan		
DK	Denmark	**LK**	Sri Lanka	**SE**	Sweden		
EE	Estonia	**LR**	Liberia	**SG**	Singapore		

INTERNATIONAL SEARCH REPORT

International application No.
PCT/IL98/00170

A. CLASSIFICATION OF SUBJECT MATTER

IPC(6) : G06F 13/00; H04K 1/00
US CL : 395/186, 183.14, 184.01, 185.01
According to International Patent Classification (IPC) or to both national classification and IPC

B. FIELDS SEARCHED

Minimum documentation searched (classification system followed by classification symbols)

U.S. : 395/186, 183.14, 184.01, 185.01, 183.07, 187.01; 380/3, 22

Documentation searched other than minimum documentation to the extent that such documents are included in the fields searched

NONE

Electronic data base consulted during the international search (name of data base and, where practicable, search terms used)

Please See Extra Sheet.

C. DOCUMENTS CONSIDERED TO BE RELEVANT

Category*	Citation of document, with indication, where appropriate, of the relevant passages	Relevant to claim No.
Y,P	US 5,657,473 A (KILEAN ET AL.) 12 August 1997, entire document.	1-3, 5-7, 9-11
Y	US 5,440,723 A (ARNOLD ET AL.) 08 August 1995, entire document.	1-3, 5-7, 9-11
Y	US 5,414,833 A (HERSHEY ET AL.) 09 May 1995, see entire document.	1-3, 5-7, 9-11
Y	US 5,491,791 A (GLOWNY ET AL.) 13 February 1996, see entire document.	1-3, 5-7, 9-11
X -- Y	LADKIN P. ET AL. "Comments on a paper by Voas...A model for detecting the existence of software corruption in real time", Computers and security 1994, pages 5-27-530	4, 8 ---- 1-11

[X] Further documents are listed in the continuation of Box C. [ ] See patent family annex.

*	Special categories of cited documents:	"T"	later document published after the international filing date or priority date and not in conflict with the application but cited to understand the principle or theory underlying the invention
"A"	document defining the general state of the art which is not considered to be of particular relevance	"X"	document of particular relevance; the claimed invention cannot be considered novel or cannot be considered to involve an inventive step when the document is taken alone
"E"	earlier document published on or after the international filing date	"Y"	document of particular relevance; the claimed invention cannot be considered to involve an inventive step when the document is combined with one or more other such documents, such combination being obvious to a person skilled in the art
"L"	document which may throw doubts on priority claim(s) or which is cited to establish the publication date of another citation or other special reason (as specified)	"&"	document member of the same patent family
"O"	document referring to an oral disclosure, use, exhibition or other means		
"P"	document published prior to the international filing date but later than the priority date claimed		

Date of the actual completion of the international search

25 SEPTEMBER 1998

Date of mailing of the international search report

29 OCT 1998

Name and mailing address of the ISA/US
Commissioner of Patents and Trademarks
Box PCT
Washington, D.C. 20231
Facsimile No. (703) 305-3230

Authorized officer
NORMAN WRIGHT
Telephone No. (703) 305-9600

INTERNATIONAL SEARCH REPORT

International application No.
PCT/IL98/00170

C (Continuation). DOCUMENTS CONSIDERED TO BE RELEVANT

Category*	Citation of document, with indication, where appropriate, of the relevant passages	Relevant to claim No.
A	COHEN F. "Current Best Practice Against Computer Viruses", IEEE, Carnahan Conf. on Security Technonlgy 1991, pages 261-269.	1-11
A	QASEM, I. ET AL., "Computer Viruses: Detection and prevention techniques", IEEE Proceedings 1990 Southeast Conf., pages 199-200.	1-11

Sophos Ex. 1014
Page 360 of 423

INTERNATIONAL SEARCH REPORT

International application No.
PCT/IL98/00170

B. FIELDS SEARCHED
Electronic data bases consulted (Name of data base and where practicable terms used):

APS, STN, IEEE, search terms: virus monitor?, processor, computer, viral, abnorman operation, detect?, supervis?, antivirus, service processor, maintainence, protection, hardware, compare instructions.

Electronic Acknowledgement Receipt

EFS ID:	2495468
Application Number:	11408146
International Application Number:	
Confirmation Number:	8009
Title of Invention:	Backwards researching activity indicative of pestware
First Named Inventor/Applicant Name:	Matthew L. Boney
Customer Number:	22903
Filer:	Thomas M. Croft/Sherry Bitler
Filer Authorized By:	Thomas M. Croft
Attorney Docket Number:	WEBR-044/00US
Receipt Date:	20-NOV-2007
Filing Date:	20-APR-2006
Time Stamp:	19:10:35
Application Type:	Utility under 35 USC 111(a)

Payment information:

Submitted with Payment	no

File Listing:

Document Number	Document Description	File Name	File Size(Bytes) /Message Digest	Multi Part /.zip	Pages (if appl.)
1	Information Disclosure Statement (IDS) Filed	WEBR04400USids.pdf	111539 62c0092a5639960827bf15ea1b5dbaf9461998b9	no	3

Warnings:

Information:

This is not an USPTO supplied IDS fillable form					
2	Foreign Reference	WEBR04400WOsrwo.pdf	383735 b1edf58ba352b9221ca2ab2b70ef9d9d58a9021d	no	10
Warnings:					
Information:					
3	Foreign Reference	WEBR04400WO-wo9845778.pdf	1735224 456fe4fec6914a89dd3ed1e4ac5349b40e1ad099	no	59
Warnings:					
Information:					
			Total Files Size (in bytes):	2230498	

This Acknowledgement Receipt evidences receipt on the noted date by the USPTO of the indicated documents, characterized by the applicant, and including page counts, where applicable. It serves as evidence of receipt similar to a Post Card, as described in MPEP 503.

New Applications Under 35 U.S.C. 111
If a new application is being filed and the application includes the necessary components for a filing date (see 37 CFR 1.53(b)-(d) and MPEP 506), a Filing Receipt (37 CFR 1.54) will be issued in due course and the date shown on this Acknowledgement Receipt will establish the filing date of the application.

National Stage of an International Application under 35 U.S.C. 371
If a timely submission to enter the national stage of an international application is compliant with the conditions of 35 U.S.C. 371 and other applicable requirements a Form PCT/DO/EO/903 indicating acceptance of the application as a national stage submission under 35 U.S.C. 371 will be issued in addition to the Filing Receipt, in due course.

New International Application Filed with the USPTO as a Receiving Office
If a new international application is being filed and the international application includes the necessary components for an international filing date (see PCT Article 11 and MPEP 1810), a Notification of the International Application Number and of the International Filing Date (Form PCT/RO/105) will be issued in due course, subject to prescriptions concerning national security, and the date shown on this Acknowledgement Receipt will establish the international filing date of the application.

UNITED STATES PATENT AND TRADEMARK OFFICE

UNITED STATES DEPARTMENT OF COMMERCE
United States Patent and Trademark Office
Address: COMMISSIONER FOR PATENTS
P.O. Box 1450
Alexandria, Virginia 22313-1450
www.uspto.gov

APPLICATION NUMBER	FILING OR 371(c) DATE	FIRST NAMED APPLICANT	ATTY. DOCKET NO./TITLE
11/408,146	04/20/2006	Matthew L. Boney	WEBR-044/00US

CONFIRMATION NO. 8009

22903
COOLEY GODWARD KRONISH LLP
ATTN: PATENT GROUP
Suite 1100
777 - 6th Street, NW
WASHINGTON, DC20001

Title: Backwards researching activity indicative of pestware

Publication No. US-2007-0250817-A1
Publication Date: 10/25/2007

NOTICE OF PUBLICATION OF APPLICATION

The above-identified application will be electronically published as a patent application publication pursuant to 37 CFR 1.211, et seq. The patent application publication number and publication date are set forth above.

The publication may be accessed through the USPTO's publically available Searchable Databases via the Internet at www.uspto.gov. The direct link to access the publication is currently http://www.uspto.gov/patft/.

The publication process established by the Office does not provide for mailing a copy of the publication to applicant. A copy of the publication may be obtained from the Office upon payment of the appropriate fee set forth in 37 CFR 1.19(a)(1). Orders for copies of patent application publications are handled by the USPTO's Office of Public Records. The Office of Public Records can be reached by telephone at (703) 308-9726 or (800) 972-6382, by facsimile at (703) 305-8759, by mail addressed to the United States Patent and Trademark Office, Office of Public Records, Alexandria, VA 22313-1450 or via the Internet.

In addition, information on the status of the application, including the mailing date of Office actions and the dates of receipt of correspondence filed in the Office, may also be accessed via the Internet through the Patent Electronic Business Center at www.uspto.gov using the public side of the Patent Application Information and Retrieval (PAIR) system. The direct link to access this status information is currently http://pair.uspto.gov/. Prior to publication, such status information is confidential and may only be obtained by applicant using the private side of PAIR.

Further assistance in electronically accessing the publication, or about PAIR, is available by calling the Patent Electronic Business Center at 1-866-217-9197.

Pre-Grant Publication Division, 703-605-4283

Please type a plus sign (+) inside this box ➔ [+]

PTO/SB/08A (08-00)

Substitute for form 1449A/PTO		Complete if Known	
INFORMATION DISCLOSURE STATEMENT BY APPLICANT		Application Number	11/408,146
		Filing Date	04/20/2006
		First Named Inventor	Matthew L. Boney
(*use as many sheets as necessary*)		Group Art Unit	2154
		Examiner Name	Not Yet Assigned
Sheet	1 of 3	Attorney Docket Number	WEBR-044/00US

U.S. PATENT DOCUMENTS

Examiner Initials*	Cite No.[1]	U.S. Patent Document Number	U.S. Patent Document Kind Code[2] (*if known*)	Name of Patentee or Applicant of Cited Document	Date of Publication of Cited Document MM-DD-YYYY
		5,623,600		JI, ET AL.	04/22/97
		5,920,696		BRANDT ET AL.	07/1999
		5,951,698		CHEN ET AL.	09/1999
		6,069,628		FARRY, ET AL.	05/30/00
		6,073,241		ROSENBERG, ET AL.	06/06/00
		6,092,194		TOUBOUL	07/18/00
		6,154,844		TOUBOUL	11/28/00
		6,167,520		TOUBOUL	12/26/00
		6,310,630		KULKARNI, ET AL.	10/30/01
		6,397,264		STASNICK, ET AL.	05/28/02
		6,405,316		KRISHNAN ET AL.	06/2002
		6,460,060		MADDALOZZO, JR., ET AL.	10/01/02
		6,480,962		TOUBOUL	11/12/02
		6,535,931		CELI, JR.	03/18/03
		6,611,878		DE ARMAS, ET AL.	08/26/03
		6,633,835		MORAN ET AL.	10/14/03
		6,667,751		WYNN, ET AL.	12/23/03
		6,701,441		BALASUBRAMANIAM, ET AL.	03/02/04
		6,772,345		SHETTY	08/2004
		6,785,732		BATES, ET AL.	08/31/04
		6,804,780		TOUBOUL	10/12/04
		6,813,711		DIMENSTEIN	11/02/04
		6,829,654		JUNGEK	12/07/04
		6,910,134		MAHER ET AL.	06/2005
		6,965,968		TOUBOUL	11/15/05
		7,058,822		EDERY ET AL.	06/06/06
		7,107,617		HURSEY ET AL.	09/2006
		US 2002/0162015		TANG	10/2002
		US 2002/0166063		LACHMAN ET AL.	11/2002
		US 2003/0065943		GEIS ET AL.	04/2003
		US 2003/0074581		HURSEY ET AL.	04/2003
		US 2003/0101381		MATEEV ET AL.	05/2003
		US 2003/0159070		MAYER ET AL.	08/2003
		US 2003/0217287	A1	KRUGLENKO	11/20/03
		US 2004/0030914	A1	KELLEY, ET AL.	02/12/04
		US 2004/0034794	A1	MAYER ET AL.	02/19/04
		US 2004/0064736	A1	OBRECHT, MARK ERIC, ET AL.	04/01/04
		US 2004/0080529	A1	WOJCIK, PAUL KAZIMIERZ	04/29/04
		US 2004/0143763	A1	RADATTI	07/22/04

Examiner Signature		Date Considered	

*EXAMINER: Initial if reference considered, whether or not citation is in conformance with MPEP 609. Draw line through citation if not in conformance and not considered. Include copy of this form with next communication to applicant.

[1] Unique citation designation number.
[2] See attached Kinds of U.S. Patent Documents.

Please type a plus sign (+) inside this box ➔ +

PTO/SB/08A (08-00)

Substitute for form 1449A/PTO		Complete if Known	
INFORMATION DISCLOSURE STATEMENT BY APPLICANT		Application Number	11/408,146
		Filing Date	04/20/2006
		First Named Inventor	Matthew L. Boney
		Group Art Unit	2154
(use as many sheets as necessary)		Examiner Name	Not Yet Assigned
Sheet	2 of 3	Attorney Docket Number	WEBR-044/00US

U.S. PATENT DOCUMENTS

Examiner Initials*	Cite No.[1]	U.S. Patent Document Number	Kind Code[2] (*if known*)	Name of Patentee or Applicant of Cited Document	Date of Publication of Cited Document MM-DD-YYYY
		US 2004/0187023	A1	ALAGNA, MICHAEL ANTHONY, ET AL.	09/23/04
		US 2004/0225877	A1	HUANG	11/11/04
		US 2005/0038697	A1	JEFFREY	02/2005
		US 2005/0154885		VISCOMI ET AL.	07/2005
		US 2005/0138433	A1	LINETSKY, GENE	06/23/05
		10/956,573		STEVE THOMAS	N/A Filed: 10/01/04
		10/956,574		STEVE THOMAS	N/A Filed: 10/01/04
		10/956,818		MATTHEW BONEY	N/A Filed: 10/01/04
		11/257,609		MICHAEL BURTSCHER	N/A Filed: 10/25/05
		11/237,291		PHILIP MADDALONI	N/A Filed: 09/28/05
		11/408,215		MATTHEW BONEY	N/A Filed: 04/20/06
		11/408,145		MATTHEW BONEY	N/A Filed: 04/20/06

Examiner Signature		Date Considered	

*EXAMINER: Initial if reference considered, whether or not citation is in conformance with MPEP 609. Draw line through citation if not in conformance and not considered. Include copy of this form with next communication to applicant.

[1] Unique citation designation number.
[2] See attached Kinds of U.S. Patent Documents.

Please type a plus sign (+) inside this box ➔ [+]

PTO/SB/08A (08-00)

Substitute for form 1449A/PTO		Complete if Known	
INFORMATION DISCLOSURE STATEMENT BY APPLICANT		Application Number	11/408,146
		Filing Date	04/20/2006
		First Named Inventor	Matthew L. Boney
(*use as many sheets as necessary*)		Group Art Unit	2154
		Examiner Name	Not Yet Assigned
Sheet	3 of 3	Attorney Docket Number	WEBR-044/00US

FOREIGN PATENT DOCUMENTS

Examiner Initials*	Cite No.[1]	Foreign Patent Document			Name of Patentee or Applicant of Cited Document	Date of Publication of Cited Document MM-DD-YYYY	T[4]
		Office[1]	Number[2]	Kind Code[3] (if known)			

OTHER – NON PATENT LITERATURE DOCUMENTS

Examiner Initials*	Cite No.[1]	Include name of the author (in CAPITAL LETTERS), title of the article (when appropriate), title of the item (book, magazine, journal, serial, symposium, catalog, etc.), date, page(s), volume-issue number(s), publisher, city and/or country where published.	T[2]
	I.	Codeguru, Three Ways to Inject Your Code Into Another Process, by Robert Kuster, August 4, 2003, 22 pgs.	
	II.	Codeguru, Managing Low-Level Keyboard Hooks With The Windows API for VB .Net, by Paul Kimmel, April 18, 2004, 10 pgs.	
	III.	Codeguru, Hooking The Keyboard, by Anoop Thomas, December 13, 2001, 6 pgs.	
	IV.	Illusive Security, Wolves In Sheep's Clothing: malicious DLLs Injected Into trusted Host Applications, Author Unknown, http://home.arcor.de/scheinsicherheit/dll.htm 13 pgs.	
	V.	DevX.com, Intercepting Systems API Calls, by Seung-Woo Kim, May 13, 2004, 6 pgs.	
	VI.	Microsoft.com, How To Subclass A Window in Windows 95, Article ID 125680, July 11, 2005, 2 pgs.	
	VII.	MSDN, Win32 Hooks by Kyle Marsh, July 29, 1993, 15 pgs.	
	VII.	PCT Search Report, PCT/US05/34874, 07/05/06, 7 Pages	
	VIII	Yurcik, William et al., "A Planning Framework for Implementing Virtual Private Networks, June 2001, IT Pro, IEEE, pages 41-44	

Examiner Signature		Date Considered	

*EXAMINER: Initial if reference considered, whether or not citation is in conformance with MPEP 609. Draw line through citation if not in conformance and not considered. Include copy of this form with next communication to applicant.

[1] Enter Office that issued the document, by the two-letter code (WIPO Standard ST.3).
[2] For Japanese patent documents, the indication of the year of the reign of the Emperor must precede the serial number of the patent document.
[3] Kind of document by the appropriate symbols as indicated on the document under WIPO Standard ST. 16 if possible.
[4] Applicant is to place a check mark here if English language Translation is attached.

[1] Unique citation designation number.
[2] Applicant is to place a check mark here if English language Translation attached.

Electronic Acknowledgement Receipt

EFS ID:	1689054
Application Number:	11408146
International Application Number:	
Confirmation Number:	8009
Title of Invention:	Backwards researching activity indicative of pestware
First Named Inventor/Applicant Name:	Matthew L. Boney
Customer Number:	22903
Filer:	Sean Ryan Odowd/Daxmara Sanchez
Filer Authorized By:	Sean Ryan Odowd
Attorney Docket Number:	WEBR-044/00US
Receipt Date:	18-APR-2007
Filing Date:	20-APR-2006
Time Stamp:	13:15:54
Application Type:	Utility

Payment information:

Submitted with Payment	no

File Listing:

Document Number	Document Description	File Name	File Size(Bytes)	Multi Part /.zip	Pages (if appl.)
1		IDS.pdf	229074	yes	5

	Multipart Description/PDF files in .zip description		
	Document Description	**Start**	**End**
	Miscellaneous Incoming Letter	1	2
	Information Disclosure Statement (IDS) Filed	3	5

Warnings:					
Information:					
2	NPL Documents	WEBR-003-00US.pdf	1087355	no	32
Warnings:					
Information:					
3	NPL Documents	WEBR-005-00US.pdf	1212931	no	38
Warnings:					
Information:					
4	NPL Documents	WEBR-006-00US.pdf	991454	no	32
Warnings:					
Information:					
5	NPL Documents	WEBR-015-00US.pdf	765879	no	24
Warnings:					
Information:					
6	NPL Documents	WEBR-020-00US.pdf	782212	no	24
Warnings:					
Information:					
7	NPL Documents	WEBR-043-00US.pdf	1153335	no	35
Warnings:					
Information:					
8	NPL Documents	WEBR-045-00US.pdf	1116185	no	34
Warnings:					
Information:					

9	NPL Documents	Article-oa-002-00US.pdf	460799	no	4
Warnings:					
Information:					
10	NPL Documents	Articles.pdf	4504142	no	88
Warnings:					
Information:					
		Total Files Size (in bytes):	12303366		

This Acknowledgement Receipt evidences receipt on the noted date by the USPTO of the indicated documents, characterized by the applicant, and including page counts, where applicable. It serves as evidence of receipt similar to a Post Card, as described in MPEP 503.

New Applications Under 35 U.S.C. 111
If a new application is being filed and the application includes the necessary components for a filing date (see 37 CFR 1.53(b)-(d) and MPEP 506), a Filing Receipt (37 CFR 1.54) will be issued in due course and the date shown on this Acknowledgement Receipt will establish the filing date of the application.

National Stage of an International Application under 35 U.S.C. 371
If a timely submission to enter the national stage of an international application is compliant with the conditions of 35 U.S.C. 371 and other applicable requirements a Form PCT/DO/EO/903 indicating acceptance of the application as a national stage submission under 35 U.S.C. 371 will be issued in addition to the Filing Receipt, in due course.

New International Application Filed with the USPTO as a Receiving Office
If a new international application is being filed and the international application includes the necessary components for an international filing date (see PCT Article 11 and MPEP 1810), a Notification of the International Application Number and of the International Filing Date (Form PCT/RO/105) will be issued in due course, subject to prescriptions concerning national security, and the date shown on this Acknowledgement Receipt will establish the international filing date of the application.

IN THE UNITED STATES PATENT AND TRADEMARK OFFICE

In re application of:	Matthew L. Boney	**Confirmation No.:**	8009
Serial No.:	11/408,146	**Art Unit No.:**	2154
Filed:	04/20/2006	**Examiner:**	Not Yet Assigned

Title: BACKWARDS RESEARCHING ACTIVITY INDICATIVE OF PESTWARE

Commissioner for Patents
P.O. Box 1450
Alexandria, VA 22313-1450

INFORMATION DISCLOSURE STATEMENT UNDER 37 C.F.R. §1.97(b)

In accordance with the duty of disclosure set forth in 37 C.F.R. §1.56, Applicant(s) hereby submits the following information in conformance with 37 C.F.R. §§1.97 and 1.98.

[X] Pursuant to 37 C.F.R. §1.98, a copy of each non-US patent document cited in the attached Form PTO/SB/08 is enclosed.

[] Pursuant to 37 C.F.R. §1.98, a copy of each document cited in the attached Form PTO/SB/08 is enclosed.

[] No copies of the publications listed on the attached Form PTO/SB/08A are being provided pursuant to 37 C.F.R. §1.98(d) because the publications were previously cited by or submitted to the Office in prior Application Serial No. ___ to which the above-identified application claims priority under 35 U.S.C. §120.

[X] No copies of any U.S. patents or U.S. patent application publications listed on the attached Form PTO/SB/08A are being provided pursuant to 37 C.F.R. §1.98 because this application was filed after June 30, 2003.

[] Publication(s) ___ listed on the attached Form PTO/SB/08A were cited in a foreign search or examination report corresponding to ___ application serial no. ___ and mailed on ___.

[] Enclosed is a copy of a non-English publication(s) ___. Pursuant to §609 of the M.P.E.P., Applicant submits the attached foreign search or examination report, which cites such non-English language publication(s).

[] Enclosed is a copy of a non-English publication(s) ___. English language publication ___ (copy enclosed) claims priority from this non-English publication.

This Information Disclosure Statement is filed within any one of the following time periods:

[] within three months from the filing date of this national application other than a CPA under 37 C.F.R. § 1.53(d);

[] within three months from the date of entry of the national stage as set forth in 37 C.F.R. §1.491 in this international application;

[X] before the mailing date of a first office action on the merits; or

[] before the mailing of a first office action after the filing of a request for continued examination under 37 C.F.R. § 1.114.

It is respectfully requested that the Examiner consider the above-noted information and return an initialed copy of the attached Form PTO/SB/08A to the undersigned.

Cooley Godward Kronish LLP
ATTN: Patent Group
1200 19th Street, NW
5th Floor
Washington, DC 20036
Telephone: (720) 566-4035
Facsimile: (202) 842-7899

Respectfully submitted,
COOLEY GODWARD KRONISH LLP

By: _____
Sean R. O'Dowd
Reg. No. 53,403

OIPE IAP33
JUN 15 2006
PATENT & TRADEMARK OFFICE

06-16-06

IFW $

UNITED STATES PATENT AND TRADEMARK OFFICE

UNITED STATES DEPARTMENT OF COMMERCE
United States Patent and Trademark Office
Address: COMMISSIONER FOR PATENTS
P.O. Box 1450
Alexandria, Virginia 22313-1450
www.uspto.gov

APPLICATION NUMBER	FILING OR 371 (c) DATE	FIRST NAMED APPLICANT	ATTORNEY DOCKET NUMBER
11/408,146	04/20/2006	Matthew L. Boney	WEBR-044/00US

CONFIRMATION NO. 8009

FORMALITIES LETTER

22903
COOLEY GODWARD LLP
ATTN: PATENT GROUP
THE BOWEN BUILDING
875 15TH STREET, N.W. SUITE 800
WASHINGTON, DC 20005-2221

Date Mailed: 05/24/2006

NOTICE TO FILE MISSING PARTS OF NONPROVISIONAL APPLICATION

FILED UNDER 37 CFR 1.53(b)

Filing Date Granted

Items Required To Avoid Abandonment:

An application number and filing date have been accorded to this application. The item(s) indicated below, however, are missing. Applicant is given **TWO MONTHS** from the date of this Notice within which to file all required items and pay any fees required below to avoid abandonment. Extensions of time may be obtained by filing a petition accompanied by the extension fee under the provisions of 37 CFR 1.136(a).

- The oath or declaration is missing. *A properly signed oath or declaration in compliance with 37 CFR 1.63, identifying the application by the above Application Number and Filing Date, is required.*
  Note: If a petition under 37 CFR 1.47 is being filed, an oath or declaration in compliance with 37 CFR 1.63 signed by all available joint inventors, or if no inventor is available by a party with sufficient proprietary interest, is required.

The applicant needs to satisfy supplemental fees problems indicated below.

The required item(s) identified below must be timely submitted to avoid abandonment:

- To avoid abandonment, a surcharge (for late submission of filing fee, search fee, examination fee or oath or declaration) as set forth in 37 CFR 1.16(f) of $130 for a non-small entity, must be submitted with the missing items identified in this letter.

SUMMARY OF FEES DUE:

Total additional fee(s) required for this application is **$130** for a Large Entity

- **$130** Surcharge.

Replies should be mailed to: Mail Stop Missing Parts

06/19/2006 DEMMANU1 00000011 501283 11408146

01 FC:1051 130.00 DA

Commissioner for Patents
P.O. Box 1450
Alexandria VA 22313-1450

A copy of this notice MUST be returned with the reply.

T. Nguyen

Office of Initial Patent Examination (571) 272-4000, or 1-800-PTO-9199, or 1-800-972-6382
PART 2 - COPY TO BE RETURNED WITH RESPONSE

OIPE IAP68
JUN 15 2006
PATENT & TRADEMARK OFFICE

Attorney Docket No. WEBR-044/00US **PATENT**

Express Mail Label Number: EV778911595US
Date of Deposit: 6/15/06

I hereby certify that this correspondence is being deposited with the United States Postal Service with sufficient postage as Express Mail in an envelope addressed to the Mail Stop Missing Parts, Commissioner for Patents, P.O. Box 1450, Alexandria, VA 22313-1450.

By: _____
Daxmara Sanchez

IN THE UNITED STATES PATENT AND TRADEMARK OFFICE

In re application of:	Matthew L. Boney	**Confirmation No.:**	8009
Serial No.:	11/408,146	**Art Unit No.:**	2154
Filed:	04/20/06	**Examiner:**	Not yet Assigned

Title: BACKWARDS RESEARCHING ACTIVITY INDICATIVE OF PESTWARE

Mail Stop Missing Parts
Commissioner for Patents
P.O. Box 1450
Alexandria, VA 22313-1450

RESPONSE TO NOTICE TO FILE MISSING PARTS OF APPLICATION

In response to the Notice to File Missing Parts of Application under 37 C.F.R. § 1.53(e) or (f) mailed May 24, 2006, enclosed are:

[X] Copy of the Notice to File Missing Parts of Application
[X] Executed Declaration
[] Power to Prosecute
[] Assertion of Entitlement to Small Entity Status
[] Application Data Sheet
[X] Other: Executed Assignment and Recordation Form
[] A copy of the Official Filing Receipt marked in red to show corrections that are needed. Please make the following corrections in the Official Filing Receipt:

Issuance of a corrected filing receipt is respectfully requested.

and the payment of the following fee(s):

[X] Filing fee of $130.00
[] Surcharge fee for Late Filing of Declaration of $
[X] Other fees: $40.00 (Assignment)

Total Fee due: $170.00.

[] Check No. ___ in the amount of $___ for the total fee is attached.

[X] Please charge $170.00 to Deposit Account No. 50-1283 for the total fee. This paper is being submitted in duplicate.

The Commissioner is hereby authorized to charge any appropriate fees under 37 C.F.R. §§1.16, 1.17, and 1.21 that may be required by this paper, and to credit any overpayment, to Deposit Account No. 50-1283.

Cooley Godward LLP
ATTN: Patent Group
The Bowen Building
875 15th Street NW
Suite 800
Washington, DC 20005-2221
Telephone: (720) 566-4035
Facsimile: (720) 566-4099

Respectfully submitted,
COOLEY GODWARD LLP

By: _____
Sean R. O'Dowd
Reg. No. 53,403

254754 v1/CO

OIPE IAP58
JUN 1 5 2006
PATENT & TRADEMARK OFFICE

DECLARATION

As a below named inventor, I hereby declare that:

My residence, post office address and citizenship are as stated next to my name;

I believe I am the original, first and sole inventor (if only one name is listed below) or an original, first and joint inventor (if plural names are listed below) of the subject matter which is claimed and for which a patent is sought on the invention entitled:

BACKWARDS RESEARCHING ACTIVITY INDICATIVE OF PESTWARE

the specification of which:

(check one)

[] is attached hereto;

[X] was filed as United States Application Serial No. 11/408,146 file on 04/20/06.

I have reviewed and understand the contents of the above-identified specification, including the claims, as amended by any amendment referred to above;

I acknowledge the duty to disclose to the U.S. Patent and Trademark Office all information which is known to me to be material to the patentability of said invention in accordance with 37 C.F.R. §1.56;

I hereby claim the benefit under 35 U.S.C. §119(e) of any United States provisional application(s) listed below:

(Application Number)	(Filing Date) (day, month, year)
(Application Number)	(Filing Date) (day, month, year)

I hereby declare that all statements made herein of my own knowledge are true and that all statements made on information and belief are believed to be true; and further that these statements were made with the knowledge that willful false statements and the like so made are

punishable by fine or imprisonment, or both, under Section 1001 of Title 18 of the United States Code and that such willful false statements may jeopardize the validity of the application or any patent issued thereon.

Full name of third inventor: Matthew L. Boney

Inventor's signature _____ Date June 7 2006
Residence: 1100 E. 17th Ave., E303, Longmont, Colorado 80501
Citizen of: USA
Post Office Address: Same as Above

UNITED STATES PATENT AND TRADEMARK OFFICE

UNITED STATES DEPARTMENT OF COMMERCE
United States Patent and Trademark Office
Address: COMMISSIONER FOR PATENTS
P.O. Box 1450
Alexandria, Virginia 22313-1450
www.uspto.gov

APPLICATION NUMBER	FILING OR 371 (c) DATE	FIRST NAMED APPLICANT	ATTORNEY DOCKET NUMBER
11/408,146	04/20/2006	Matthew L. Boney	WEBR-044/00US

CONFIRMATION NO. 8009

FORMALITIES LETTER

22903
COOLEY GODWARD LLP
ATTN: PATENT GROUP
THE BOWEN BUILDING
875 15TH STREET, N.W. SUITE 800
WASHINGTON, DC 20005-2221

Date Mailed: 05/24/2006

NOTICE TO FILE MISSING PARTS OF NONPROVISIONAL APPLICATION

FILED UNDER 37 CFR 1.53(b)

Filing Date Granted

Items Required To Avoid Abandonment:

An application number and filing date have been accorded to this application. The item(s) indicated below, however, are missing. Applicant is given **TWO MONTHS** from the date of this Notice within which to file all required items and pay any fees required below to avoid abandonment. Extensions of time may be obtained by filing a petition accompanied by the extension fee under the provisions of 37 CFR 1.136(a).

- The oath or declaration is missing. *A properly signed oath or declaration in compliance with 37 CFR 1.63, identifying the application by the above Application Number and Filing Date, is required.*
  Note: If a petition under 37 CFR 1.47 is being filed, an oath or declaration in compliance with 37 CFR 1.63 signed by all available joint inventors, or if no inventor is available by a party with sufficient proprietary interest, is required.

The applicant needs to satisfy supplemental fees problems indicated below.

The required item(s) identified below must be timely submitted to avoid abandonment:

- To avoid abandonment, a surcharge (for late submission of filing fee, search fee, examination fee or oath or declaration) as set forth in 37 CFR 1.16(f) of $130 for a non-small entity, must be submitted with the missing items identified in this letter.

SUMMARY OF FEES DUE:

Total additional fee(s) required for this application is **$130** for a Large Entity

- **$130** Surcharge.

Replies should be mailed to: Mail Stop Missing Parts

Commissioner for Patents
P.O. Box 1450
Alexandria VA 22313-1450

A copy of this notice MUST be returned with the reply.

T. Nguyen

Office of Initial Patent Examination (571) 272-4000, or 1-800-PTO-9199, or 1-800-972-6382
PART 3 - OFFICE COPY

18351 U.S. PTO
042006

Attorney Docket No. WEBR-044/00US **PATENT**

Express Mail Label Number: EV778911437US Date of Deposit: 4/20/06

I hereby certify that this correspondence is being deposited with the United States Postal Service with sufficient postage as Express Mail in an envelope addressed to the Commissioner for Patents, P.O. Box 1450, Alexandria, VA 22313-1450.

By: _____
Daxmara Sanchez

Commissioner for Patents
P.O. Box 1450
Alexandria, VA 22313-1450

112991 U.S. PTO
11/408146
042006

UTILITY PATENT APPLICATION TRANSMITTAL

Transmitted herewith for filing is a U.S. Non-Provisional Utility Patent Application entitled:

BACKWARDS RESEARCHING ACTIVITY INDICATIVE OF PESTWARE

naming as inventors: Matthew L. Boney

and including:

[X] (22) pages of description (before the claims);
[X] (06) pages of claims ((22) total claims; (03) independent claims);
[X] One (1) Sheet of Abstract;
[X] (05) sheets of drawing(s) including Figures 1-5.

1. Also enclosed are:
   - [] Executed Declaration
   - [] Application Data Sheet
   - [] Assignment and Assignment Recordation Cover Sheet
   - [] Power by Assignee
   - [] Assertion of Entitlement to Small Entity Status
   - [] Information Disclosure Statement
   - [] Preliminary Amendment
   - [] CD-ROM or CD-R in duplicate, large table or Computer Program (Appendix)
   - [] Nucleotide and/or Amino Acid Sequence Submission
     - [] Computer Readable Form (CRF) on 3 ½" floppy disk
     - [] Specification Sequence Listing on:
       - [] CD-ROM or CD-R (2 copies); or
       - [] paper

[] The content of the copy in computer readable form is identical to the content of the paper, CD-ROM, or CD-R copy of the Sequence Listing.

[] Nonpublication Request and Certification

[] Check No. XXX in the amount of $XXX for the total fee as calculated below

[X] Return receipt postcard

[] Other: XXX

2. Applicant claims small entity status. See 37 CFR 1.27.

3. The filing fee has been calculated as follows [] and in accordance with the enclosed preliminary amendment:

	NO. OF CLAIMS		EXTRA CLAIMS	RATE	FEE
Basic Application Fee (including filing fee of $300, search fee of $500, examination fee of $200)					$1,000.00
Total Claims	22	- 20 =	02	x $50.00	$100.00
Independent Claims	03	- 3 =	0	x $200.00	$0.0
If multiple dependent claims are presented, add $360.00					
Total Application Fee					$1,100.00
If an Assertion of Entitlement to Small Entity Status is asserted, subtract 50% of Total Application Fee					0
Other fees: (specify)					
TOTAL FEE DUE					$1,100.00

[] This application is being filed without a filing fee. Issuance of a Notice to File Missing Parts of Application is respectfully requested.

[] A check for the total fee is attached.

[X] Please charge $$1,100.00 to Deposit Account No. **50-1283** for the total fee. This paper is being submitted in duplicate.

[X] The Director is hereby authorized to charge any appropriate fees under 37 C.F.R. §§1.16, 1.17, and 1.21 that may be required by this paper, and to credit any overpayment, to Deposit Account No. **50-1283**.

4. Please direct all correspondence concerning this application to:

COOLEY GODWARD LLP
ATTN: Patent Group
One Freedom Square
Reston Town Center
11951 Freedom Drive
Reston, VA 20190-5656
Tel: (720) 566-4035
Fax: (720) 566-4099

CUSTOMER NUMBER: **22903**

COOLEY GODWARD LLP
ATTN: Patent Group
One Freedom Square
Reston Town Center
11951 Freedom Drive
Reston, VA 20190-5656
Tel: (720) 566-4035
Fax: (720) 566-4099

Respectfully submitted,
COOLEY GODWARD LLP

By: _____
Sean R. O'Dowd
Reg. No. 53,403

COOLEY GODWARD LLP
ATTORNEY DOCKET NO.: WEBR-044/00US
CLIENT NO.: 303666-2049

EXPRESS MAIL NO. EV778911437US

APPLICATION FOR PATENT

TITLE: BACKWARDS RESEARCHING ACTIVITY INDICATIVE OF PESTWARE

RELATED APPLICATIONS

[0001] The present application is related to commonly owned and assigned Application No. 10/956,573, Attorney Docket No. WEBR-003/00US, entitled *System and Method For Heuristic Analysis to Identify Pestware*; Application No. 10/956,574, Attorney Docket No. WEBR-005/00US, entitled *System and Method for Pestware Detection and Removal*; Application No. 11/237,291, Attorney Docket No. WEBR-006/00US, entitled *System and Method for Locating Malware and Generating Malware Definitions*; Application No. 11/257,609, Attorney Docket No. WEBR-015/00US, entitled *System and Method for Kernel-Level Pestware Management*; Application No. 11/237,291, Attorney Docket No. WEBR-020/00US, entitled *Client Side Exploit Tracking*; Application No. [unassigned], Attorney Docket No. WEBR-043/00US, entitled *Backward Researching Existing Pestware*, filed herewith; and Application No. [unassigned], Attorney Docket No. WEBR-045/00US, entitled *Backward Researching Time Stamped Events to Find an Origin of Pestware*, filed herewith, which are incorporated herein by reference.

COPYRIGHT

[0002] A portion of the disclosure of this patent document contains material that is subject to copyright protection. The copyright owner has no objection to the facsimile reproduction by anyone of the patent disclosure, as it appears in the Patent and Trademark Office patent files or records, but otherwise reserves all copyright rights whatsoever.

FIELD OF THE INVENTION

[0003] The present invention relates to computer system management. In particular, but not by way of limitation, the present invention relates to systems and methods for detecting, controlling and/or removing pestware.

BACKGROUND OF THE INVENTION

[0004] Personal computers and business computers are continually attacked by trojans, spyware, and adware, collectively referred to as "malware," "spyware" or "pestware." These types of programs generally act to gather information about a person or organization—often without the person or organization's knowledge. Some pestware is highly malicious. Other pestware is non-malicious but may cause issues with privacy or system performance. And yet other pestware is actually beneficial or wanted by the user. Unless specified otherwise, "pestware" as used herein refers to any of these programs that collects information about a person or an organization.

[0005] Software is presently available to detect and remove pestware. But as it evolves, the software to detect and remove it must also evolve. Accordingly, current techniques and software for removing pestware are not always satisfactory and will most certainly not be satisfactory in the future. Additionally, because some pestware is actually valuable to a user, pestware-detection software should, in some cases, be able to handle differences between wanted and unwanted pestware.

[0006] Current pestware removal software uses definitions of known pestware to search for and remove files on a protected system. These definitions are often slow and cumbersome to create. Additionally, it is often difficult to initially locate the pestware in order to create the definitions. Accordingly, a system and method are needed to address the shortfalls of present technology and to provide other new and innovative features.

SUMMARY OF THE INVENTION

[0007] Exemplary embodiments of the present invention that are shown in the drawings are summarized below. These and other embodiments are more fully described in the Detailed Description section. It is to be understood, however, that there is no intention to limit the invention to the forms described in this Summary of the Invention or in the Detailed Description. One skilled in the art can recognize that there are numerous modifications, equivalents and alternative constructions that fall within the spirit and scope of the invention as expressed in the claims.

[0008] The present invention can provide a system and method for researching an identity of a source of activity that is indicative of pestware. In one embodiment the method comprises monitoring the computer for activity that is indicative of pestware, identifying, based upon the activity, an object residing on the computer that is a suspected pestware object and accessing at least a portion of a recorded history of sources that the computer received files from so as to identify a reference to an identity of a particular source that the suspected pestware object originated from.

[0009] As previously stated, the above-described embodiments and implementations are for illustration purposes only. Numerous other embodiments, implementations, and details of the invention are easily recognized by those of skill in the art from the following descriptions and claims.

BRIEF DESCRIPTION OF THE DRAWINGS

[0010] Various objects and advantages and a more complete understanding of the present invention are apparent and more readily appreciated by reference to the following Detailed Description and to the appended claims when taken in conjunction with the accompanying Drawings wherein:

FIGURE 1 illustrates a block diagram of one implementation of the present invention;

FIGURE 2 is a block diagram depicting an embodiment of the file storage device of FIGURE 1;

FIGURE 3 is a flowchart depicting a method according to an exemplary embodiment;

FIGURE 4 is a flowchart depicting another method according to another embodiment;

FIGURE 5 is a flowchart depicting yet another method according to yet another embodiment.

DETAILED DESCRIPTION

[0011] Referring now to the drawings, where like or similar elements are designated with identical reference numerals throughout the several views, and referring in particular to FIGURE 1, it illustrates a block diagram of one implementation of the present invention. Shown is a protected computer 100 that includes a detection module 102, quarantine module 104, removal module 106, and shields 120. In addition, a research module 108 is shown coupled to a heuristics module 110, a time stamp module 112 and a reporting module 114.

[0012] Each of these modules can be implemented in software or hardware. And if implemented in software, the modules can be implemented in a single software package or in multiple software packages. In addition, one of ordinary skill in the art will recognize that the software can be designed to operate on any type of computer system including WINDOWS and Linux-based systems. Additionally, the software can be configured to operate on personal computers and/or servers. For convenience, embodiments of the present invention are generally described herein with relation to WINDOWS-based systems. Those of skill in the art can easily adapt these implementations for other types of operating systems or computer systems.

[0013] Also shown is a file storage device 118 that is coupled to the research module 108 and an activity monitor 116. In this embodiment the file storage device includes an activity log 120, a pestware file 124 and a collection of *N* files 130. The file storage

device 118 is described herein in several implementations as hard disk drive for convenience, but this is certainly not required, and one of ordinary skill in the art will recognize that other storage media may be utilized without departing from the scope of the present invention. In addition, one of ordinary skill in the art will recognize that the storage device 118, which is depicted for convenience as a single storage device, may be realized by multiple (e.g., distributed) storage devices.

[0014] In the exemplary embodiment, the pestware file 124, corresponds to (e.g., includes data relating to) a pestware process 122 operating in memory. The pestware process 122 is exemplary of pestware processes that are configured to make one or more unauthorized alterations to the computer 100. For example, the pestware process 122 may make changes to either or both of the browser settings and/or operating system (OS) settings without approval and/or the knowledge of the user.

[0015] In accordance with several embodiments, the research module 108 is configured to receive an indication that either known pestware is residing on the computer or activities indicative of pestware have occurred or are occurring on the protected computer. In response, the research module 108 is configured to research the activity log 120 and/or the *N* files 130, which include information (e.g., historical logs) relating to events on the computer 100, to identify a source of the pestware 122, 124 or pestware-related activities, which may be reported by the reporting module 114 to a centralized data store for subsequent pestware management purposes.

[0016] For example, the identities (e.g., I.P. address, URL, email client or program name) of sources (e.g., web sites, email or program) of the pestware may be collected in a centralized data store (not shown) and then subsequently reported to other users. In addition, the sources of the pestware or suspected pestware may be visited to further research how the pestware is being distributed from the URLs and/or to generate new definitions for pestware discovered at these sources.

[0017] As described further with reference to FIGURE 2, the *N* files 130 include one or more files with information that assist the research module 108 in tracing information in the *N* files 130 to an identity (e.g., URL) of the source of pestware 122, 124 on the computer 100. One or more of the *N* files 130 may be associated with an operating system of the protected computer and/or one or more applications of the protected computer, and may include information such as process IDs, registry entries, file names, cookies and URLs among other information that is used to trace from an identified pestware file, pestware process and/or pestware activity to an originating source (e.g., URL or IP address) of the infection. In one embodiment, one or more of the *N* files 130 is generated from an application that generates a log of data after examining the computer. An example of such an application is an application distributed under the name HijackThis.

[0018] In the exemplary embodiment depicted in FIGURE 1, the research module 108 is configured to receive indications that pestware may be present on the computer from each of the detection engine 102, the heuristics engine 110 and the time stamp module

112, but this is certainly not required. In other embodiments, for example, the research module 108 may be configured to communicate only with the detection engine 102 or only with the heuristics engine. In yet other embodiments, the research module 108 may be configured to receive only a time stamp from the time stamp module 112.

[0019] According to several embodiments, pestware-detection functions operating on the protected computer 100 are represented by the detection engine 102, the quarantine engine 104, the removal engine 106, the shields 120 and the heuristic engine 110. The basic functions of the detection engine 102 is to compare files, processes and registry entries on the protected computer against known pestware definitions and characteristics. When a match is found, in addition to quarantining and removing a pestware object, the detection engine 102 informs the research module 108 of the pestware. Details associated with several embodiments of sweep, quarantine, and removal engines are found in the above-identified application entitled *System and Method for Pestware Detection and Removal.*

[0020] Pestware and pestware activity can also be identified by the shields 120, which generally run in the background on the computer system. In the exemplary embodiment depicted in FIGURE 1, the shields 120 are divided into the operating system shields 120A and the browser shields 120B. The shields 120 are designed to watch for pestware and for typical pestware activity and includes two types of shields: behavior-monitoring shields and definition-based shields.

[0021] As an example, the shields 120 monitor the protected computer 100 for certain types of activities that generally correspond to pestware behavior. Particular examples of some of the types of activities that are monitored include a process spawning another process, an alteration to registry entries, communications with remote sites via the Internet, alterations to a start up folder, injection of a DLL into another process, and a change to the browser's home page and/or bookmarks. Some specific examples of shields are disclosed in the above-identified application entitled *System and Method for Locating Malware and Generating Malware Definitions*. In the exemplary embodiment, the shields 120 inform the heuristics engine 108 about the activities and the heuristics engine 108 determines whether the research module 108 should be informed and/or whether the activity should be blocked.

[0022] As an example, the heuristics module 110 may compare the activities on the computer with weighted factors to make decisions relative to activities at the protected computer. Each of these factors may be, for example, associated with a particular activity and each factor may be weighted by the likelihood that the activity is associated with pestware. If the sum of the weighted factors that match the activity history exceed a threshold, then the activity is identified as pestware activity and the heuristics module 110 prompts the research module 108 to initiate research into the origin of the pestware initiating the activity. It should be recognized that this type of heuristics operation is merely one example, and that the heuristics module 110 may use other techniques to analyze activity on the computer. Additional information related to heuristics-based

scanning is found in the above-identified applications entitled *System and Method For Heuristic Analysis to Identify Pestware* and *Client Side Exploit Tracking.*

[0023] In the exemplary embodiment depicted in FIGURE 1, the time stamp module 112 is configured to send a time stamp to the research module 108 in response to a request from a user and/or in response to the heuristics module 108. In some embodiments for example, the heuristics module 108 provides the user with information about suspect activity on the computer 100 so that the user has the option as to whether or not the research module 108 will attempt to identify the source of the activity.

[0024] In other embodiments, the heuristics module 110 prompts the time stamp module 112 to initiate the generation of a time stamp, without user intervention, in response to activity that is indicative of pestware activity. In one implementation, for example, the heuristics module 110 prompts the research module 108 to initiate tracing of the pestware activity to an origin of the pestware that is associated with the activity, and the heuristics module 110 also prompts the time stamp module 112 to send a time stamp 112 to the research module 108 so that the research module 108 is provided with a time reference as well as information about the pestware activities.

[0025] In yet other embodiments, the timestamp module 112 operates independently of the heuristics module 110. For example, the timestamp module 112 may prompt the research module 108 to initiate a review of the activity log 120 and/or one or more of the *N* files in response to a user request.

[0026] The activity monitor 116 in several embodiments monitors activities on the computer and stores information about the activities in the activity log 120 so as to assist the research module 108 in identifying activities associated with pestware and the source of the pestware. In some embodiments, for example, the activity log 120 includes a list of processes that are running on the protected computer and the files that are associated with the processes. Although not depicted in FIGURE 1, the shields 120 may utilize the activity monitor 116 to detect pestware-related events and intercept efforts by pestware to spawn new processes or alter aspects of the protected computer 100.

[0027] In some variations, the activity monitor 116 may inject code into existing processes so that when a process attempts to call a function of the computer's 100 operating system (not shown) the injected code can check the process to be started and raise a flag if the existing process is attempting to create a new pestware process or attempting to alter one or more settings (e.g., a registry setting) of the protected computer 100.

[0028] In other embodiments, the activity monitor 116 is realized by a kernel-mode driver that may be loaded during a boot sequence for the protected computer or anytime later. In these embodiments, the activity monitor 116 is configured to log API calls in the activity log. In many variations for example, when a process (e.g., the pestware process) attempts to spawn a another pestware process or alter a registry entry, the API call utilized by the process is intercepted before it is carried out by an operating system of the protected computer. In this way, the attempt may be logged in the activity log 120 and

Sophos Ex. 1014
Page 395 of 423

the process may be analyzed to determine whether it is known to be a pestware-related process. Additional details of use of a kernel-level driver in connection with pestware management may be found in the above identified application entitled: *System and Method for Kernel-Level Pestware Management.*

[0029] It should be recognized that the block diagram in FIGURE 1 depicts functional capabilities associated with several embodiments of the present invention. One of ordinary skill in the art will recognize that the functions described with reference to FIGURE 1 may be realized by various implementations of software in connection with hardware or hardware alone. In these implementations several functions may be consolidated into a single module, for example, and as a consequence, may appear different from the block diagram in FIGURE 1 without departing from the scope of the present invention.

[0030] Referring next to FIGURE 2, shown are exemplary resources, also referred to herein as historical logs, that are available to the research module 108 in accordance with one embodiment of the present invention. In general, these resources are logs of historical events that occurred on the computer, and each of the logs includes information that may be used to reference other information when, for example, activities, processes and files are traced so as to determine an origin of the pestware or suspected pestware. As shown, a file storage device 218 in this embodiment includes an activity log 220, which may be generated by an activity monitor (e.g., the activity monitor 116) and may include information about processes running on the computer 100 and files corresponding

to the processes. In variations, the activity log 220 includes a history of API calls and respective times made by processes running on the protected computer, but this is certainly not required.

[0031] In addition, the file storage device 218 includes a browser history 240, browser cache 242, browser settings 244, OS settings 246, an event log 248, a debugging log 250, a firewall log 252, file information 254 and monitoring software logs 256. One or more of these exemplary files 240-256 may be implemented for one or more of the *N* files 130 described with reference to FIGURE 1.

[0032] The browser history 240 in this embodiment includes a listing of web sites and respective times that the web sites were visited by the user. The browser cache 242 in this embodiment includes files, cookies, and other objects cached in connection with use of a browser of the protected computer(e.g., Internet Explorer or Mozilla (not shown)). As depicted, the browser cache 242 includes a cache index 243 that includes a listing, which associates the content of the browser cache 242 with URLs and time stamps. As discussed further herein, the cache index 243 provides an efficient means for identifying the times objects were retrieved and the URLs that the objects were retrieved from.

[0033] The browser settings 244 include information about settings associated with a browser and may include a home page setting and list of user favorites. The browser settings 244 are monitored by the shields 120 for changes. Those settings also contain URLs that may be referenced in time stamped logs, firewall logs, browser histories, etc.

[0034] The operating system (OS) settings 246 may include registry entries, a start up folder and other information utilized by an operating system of the protected computer. As discussed further herein, data included in the OS settings 246 may include time stamps, which indicate when changes were made to the settings.

[0035] The event log 248 in this embodiment includes a log of events that is maintained by an operating system of the protected computer 100. For example, the event log 248 may include event information including errors, user log-in history, a listing of processes that have been launched (and the users that launched the processes), path information, information about which process (and which users) accessed a secure area and other information relating to operations of the computer 100.

[0036] Also shown in FIGURE 2 is a debugging log 250 that includes application errors, which point to a process and the address where the error occurred. Some techniques employed by pestware forcibly shut down applications, or cause applications to crash when their memory space is injected with pestware code. The infected applications like "explorer.exe" will crash, or some times restart spontaneously. These events/occurrences show up in debugging logs. These are time stamped events, that also reference files on the system.

[0037] The firewall log 252 is this embodiment is a collection of information relating to network-related events on the protected computer. The firewall log 252, may for

example, include time stamps of network activities on the protected computer, which may be utilized by the research module 108 to locate pestware or indicia of pestware.

[0038] Also shown in the data storage device 218 is a collection of file information 254, also known as the file system, which includes a database that the operating system uses to locate and store information about files. For example, the file information 254 may include the date and time a file is created, a date and time the file was last modified, the date and time the files was last accessed and the size of the file.

[0039] The monitoring-software logs 256 includes information collected from one or more pieces of monitoring software that are configured to monitor activity on the computer. As an example, the monitoring logs 256 may be generated from a filter driver, a module interfacing with a layer service provider and/or browser helper objects. It should be recognized that the logs 220, 240-256 depicted in FIGURE 2 are merely exemplary and these logs are by no means representative all the potential logs that may be accessed to research origins of pestware and/or suspected-pestware.

[0040] Referring next to FIGURE 3, shown is a flowchart depicting a method in accordance with one embodiment. Although reference will be made to FIGURES 1 and 2 for exemplary purposes, it should be recognized that the method described with reference to FIGURE 3 is certainly not limited to the specific embodiments described with reference to FIGURES 1 and 2. As shown, in this embodiment a scan of a computer (e.g., the computer 100) for pestware is initially carried out (Block 302). In several

embodiments for example, the detection engine 102 scans the file storage device 118, the operating system registry and executable memory of the protected computer for indicia of pestware (e.g., processes or files matching pestware definitions and/or alterations to a registry entry that are consistent with pestware).

[0041] As shown in FIGURE 3, if pestware indicia is found, then recorded information (e.g., the activity log 120 and/or the *N* files 130) that may include traces of the pestware is accessed (Block 304), and traversed to search for information leading to the identification of the source of the pestware (Block 306). In some instances, the origin of the pestware may be identified by simply referencing one piece of data that is stored in connection with the identification of the pestware source. In other instances, however, it may be necessary to access several pieces of referential data, which may be located in one or more of the files 220-256 before arriving at the identity of the source of the pestware.

[0042] As an example, if a pestware file is found on the file storage device 118, then the cache index 243 of the browser cache 242 may be searched to identify the name of the file, and if the originating URL is stored in connection with the file, the URL is identified as the source of the file. As another example, if a pestware process is identified, a search of the activity log 220 may lead to the identity of a second process that spawned the pestware process, and additional searching of the activity log 220 using the name of the second process may lead to the identification of a pestware file associated with the

second process. In turn, a search of the cache index 243 for the name of the pestware file may lead to the URL from which the pestware file was downloaded.

[0043] As shown in FIGURE 3, if the source of the pestware is identified (Block 308), then the source of the pestware is reported (Block 310). In some embodiments, it is contemplate that several other computers configured in accordance with the protected computer 100 depicted in FIGURE 1 may also report sources of pestware to a centralized location where the URLs may be added to a list of "bad URLs." In addition, the identified URLs may be actively searched to learn more about the pestware generated at the sites, which may help generate definitions for the pestware and may provide information about how pestware infections occur.

[0044] Referring next to FIGURE 4, shown is a flowchart depicting a method in accordance with another embodiment of the present invention. Again, reference will be made to FIGURES 1 and 2 for exemplary purposes, but it should be recognized that the method described with reference to FIGURE 4 is certainly not limited to the specific embodiments described with reference to FIGURES 1 and 2. As shown, in this embodiment activity on a computer is monitored for indicia of pestware (Block 402), and if potential pestware-related activity is detected, recorded information related to the activity is searched to identify one or more suspicious objects (e.g., files and/or processes) that are related to the activity (Block 404). In some embodiments, the shields 120 (described with reference to FIGURE 1) may monitor the protected computer 100 for activities, and if the activity is identified as potential pestware activity (e.g., by the

heuristics module 110), then the research module 108 searches the activity log 120 and/or one or more of the *N* files for information relating to the pestware-related activity.

[0045] As shown in FIGURE 4, recorded information (e.g., one or more of the *N* files) is then traversed to trace through information related to the suspicious objects that leads to an origin of the suspicious objects (Block 406). In one embodiment for example, the suspicious activity leads to a search for suspicious processes and/or files related to the activity (e.g., using the activity log 120), which then leads to a search of one or more of the *N* files 130 (e.g., the cache index 243) for an indication of the source of the suspicious process and/or files.

[0046] As depicted in FIGURE 4, if the source of the suspicious object(s) is identified (Block 408), then the source of the suspicious object(s) is then reported (e.g., to a pestware research entity). In this way, the suspicious objects and the web sites originating the suspicious objects may be further researched to establish the extent to which they may be a threat.

[0047] As an example of pestware-related activity that may trigger the search for a source of the activity, if a series of particular API calls is made in a pattern known to be associated with pestware, the process(es) making the calls may be identified using, for example, the activity log 120. In turn, the activity log 120 may be used to identify the file(s) associated with the process(es), and the cache index 243 may be utilized to search for a source of the file(es). It should be recognized that this is merely one example of the

type of activity that may trigger backwards researching of logs on a computer, and that patterns in process creation, downloaded files, changes to an operating system registry and browser settings, for example, may trigger a search of the computer's logs.

[0048] Referring next to FIGURE 5, shown is a flowchart depicting yet another method in accordance with another embodiment of the present invention. While referring to FIGURE 5, simultaneous reference will be made to FIGURES 1 and 2 for exemplary purposes, but it should be recognized that the method described with reference to FIGURE 5 is certainly not limited to the specific embodiments described with reference to FIGURES 1 and 2.

[0049] As shown, in this embodiment a time of interest is initially established based upon a suspicion that pestware has infected a computer (Block 502). In some embodiments, for example, a user may establish the time of interest based upon events the user observed (e.g., pop-ups or a system crash). In one embodiment, as discussed with reference to FIGURE 1, in response to a user request, the time stamp module 112 may issue a time stamp and initiate research that is related to activity occurring at or around the time of the time stamp. In variations, the user is provide with an alert in response to the heuristics module 110 identifying an activity that is suspicious and the user is given an option to initiate research at or around the time of interest.

[0050] In other embodiments, the time stamp module 112 automatically generates a time stamp in response to a report of suspicious activity (e.g., from the shields 120 or heuristics module 110).

[0051] As shown in FIGURE 5, once a time of interest is established, suspicious activity is identified on the computer based upon the time of interest (Block 504). The time of interest may be established, for example, to include a time period before the time stamp is issued so that a search for suspicious activity is limited to a particular time period. In some embodiments, the activity log 130 and/or one or more of the *N* files 130 are accessed and analyzed to determine whether any activity during the time of interest is suspicious (e.g., the activity indicates in some way that it may be associated with pestware). As an example, if any logged information (e.g., in the activity log 130 and/or one or more of the *N* files 130) indicates that during the time of interest that, for example, access to the registry was carried out in connection with a downloaded file or the launch of a process, the activities may identified as being suspect and further research relative to the process and the file may carried out.

[0052] Beneficially, many of the logs accessed include time-stamped information, which enables an activity that occurred during the time of interest to be readily identified and analyzed either alone or in connection with other activities occurring during the time of interest. As an example, the activity log 220, the browser history 240, browser cache 242, operating system setting 246, the event log 248, the debugging log 250 the firewall log 252, the file information 254 and the monitoring software logs 256 include time

stamped information that provides insight into the activities that occurred on the computer during the time of interest.

[0053] As depicted in FIGURE 5, once one or more activities are identified as being suspicious (Block 504), one or more objects (e.g., processes or files) on the computer are associated with the suspicious activity (Block 506). For example, the research module 108 may search the activity log 120 and/or one or more of the *N* files for information that associates the suspicious activity to one or more processes and the processes may be related to one or more files.

[0054] As shown in FIGURE 5, recorded information on the computer is then traversed in order to trace to an origin of one or more of the objects (Block 508). For example, a search of one or more of the *N* files 130 (e.g., the cache index 243) may be carried out to identify the source of a suspicious process and/or files. Once the source of the suspicious object(s) is identified (Block 510), the source is then reported (e.g., to a remote research entity)(Block 512).

[0055] It should be recognized that the methods described with reference to FIGURES 3, 4 and 5 are merely exemplary and are certainly not the only modes of operation that are contemplated. As an example, the establishment of a time of interest, as discussed with reference to FIGURE 5, may be useful in the method described with reference to FIGURES 3 and 4 for identifying information that leads to the source of the pestware or

pestware-related activities. Moreover, it is contemplated that aspects from all three of the methods described with reference to FIGURES 3, 4 and 5 may be combined.

[0056] In conclusion, the present invention provides, among other things, a system and method for identifying a source of pestware or suspected pestware on a computer. Those skilled in the art can readily recognize that numerous variations and substitutions may be made in the invention, its use and its configuration to achieve substantially the same results as achieved by the embodiments described herein. Accordingly, there is no intention to limit the invention to the disclosed exemplary forms. Many variations, modifications and alternative constructions fall within the scope and spirit of the disclosed invention as expressed in the claims.

WHAT IS CLAIMED IS:

1. A method for identifying an origin of activity on a computer that is indicative of pestware comprising:

monitoring the computer for activity that is indicative of pestware;

identifying, based upon the activity, an object residing on the computer that is a suspected pestware object; and

accessing at least a portion of a recorded history of sources that the computer received files from so as to identify a reference to an identity of a particular source that the suspected pestware object originated from.

2. The method of claim 1, including:

reporting the identity of the particular source to a pestware research entity so as to enable the pestware research entity to research whether the particular source is a source of pestware.

3. The method of claim 1, wherein the source is identified by an identifier selected from the group consisting of an I.P. address, a URL, an email client and a program.

4. The method of claim 3, wherein the identifying includes accessing an activity log that includes information that relates the activity to the suspected pestware object.

5. The method of claim 1, wherein the monitoring includes monitoring the computer for activity with a kernel-mode driver.

6. The method of claim 5, wherein the monitoring includes heuristically analyzing the activity so as to arrive at a determination that the activity is indicative of pestware.

7. The method of claim 1, wherein the recorded history resides in a browser cache, which includes information about files downloaded to the computer and a source of each of the files.

8. The method of claim 1, wherein the recorded history resides in at least one log selected from the group consisting of an activity log, a browser history, browser cache, browser settings, operating system settings, an event log, a debugging log, a firewall log, file information and monitoring software logs.

9. A system for identifying a source of activity on a computer that is indicative of pestware including:

a heuristics module configured to identify activity on the computer that is indicative of pestware residing on the computer; and

a research portion configured to access a first set of recorded information on the computer that relates the activity to at least one file residing an the computer, and

wherein the research portion is configured to access a second set of recorded information on the computer that relates the at least one file to a source from which the file was received; and

a reporting portion configured to generate a report that identifies the source of the file.

10. The system of claim 9, including:

an activity monitor configured to monitor API calls and to store a history of at least a portion of the API calls in an activity log.

11. The system of claim 10, wherein activity monitor is configured to store an identity of each process that made each of the API calls in the stored history, and wherein the activity monitor is configured to store an identity of each file that corresponds to each the processes that made the API calls in the stored history so as to create a relation between each API call and at least one file.

12. The system of claim 10, wherein the heuristics module is configured to receive information about the API calls from the activity monitor and determine whether the API calls are indicative of pestware.

13. The system of claim 10, wherein the activity monitor includes a kernel-mode driver adapted to intercept the API calls.

14. The system of claim 9, wherein the first set of recorded information and the second set of recorded information reside in the same log file on a file storage device of the computer.

15. The system of claim 9, wherein the source is identified by an identifier selected from the group consisting of an I.P. address, a URL, an email client and a program name.

16. The system of claim 9, wherein the recorded history resides in at least one log selected from the group consisting of an activity log, a browser history, browser cache, browser settings, operating system settings, an event log, a debugging log, a firewall log, file information and monitoring software logs.

17. A computer-readable medium including processor-executable instructions for identifying an origin of activity on a computer that is indicative of pestware, the instructions including instructions for:

monitoring the computer for activity that is indicative of pestware;

identifying, based upon the activity, an object residing on the computer that is a suspected pestware object; and

accessing at least a portion of a recorded history of sources that the computer received files from so as to identify a reference to an identity of a source that the suspected pestware object originated from.

18. The computer-readable medium of claim 17, including instructions for:

reporting the identity of the particular web site to a pestware research entity so as to enable the pestware research entity to research whether the particular source is a source of pestware.

19. The computer-readable medium of claim 17, wherein the source is identified by an identifier selected from the group consisting of an I.P. address, a URL, an email client and a program.

20. The computer-readable medium of claim 17, wherein the instructions for monitoring include instructions for monitoring the computer for activity with a kernel-mode driver.

21. The computer-readable medium of claim 20, wherein the instructions for monitoring include instructions for heuristically analyzing the activity so as to arrive at a determination that the activity is indicative of pestware.

22. The computer-readable medium of claim 17, wherein the recorded history resides in at least one log selected from the group consisting of an activity log, a browser history, browser cache, browser settings, operating system settings, an event log, a debugging log, a firewall log, file information and monitoring software logs.

ABSTRACT

A system and method for researching an identity of a source of activity that is indicative of pestware is described. In one embodiment the method comprises monitoring the computer for activity that is indicative of pestware, identifying, based upon the activity, an object residing on the computer that is a suspected pestware object; and accessing at least a portion of a recorded history of sources that the computer received files from so as to identify a reference to an identity of a particular source that the suspected pestware object originated from.

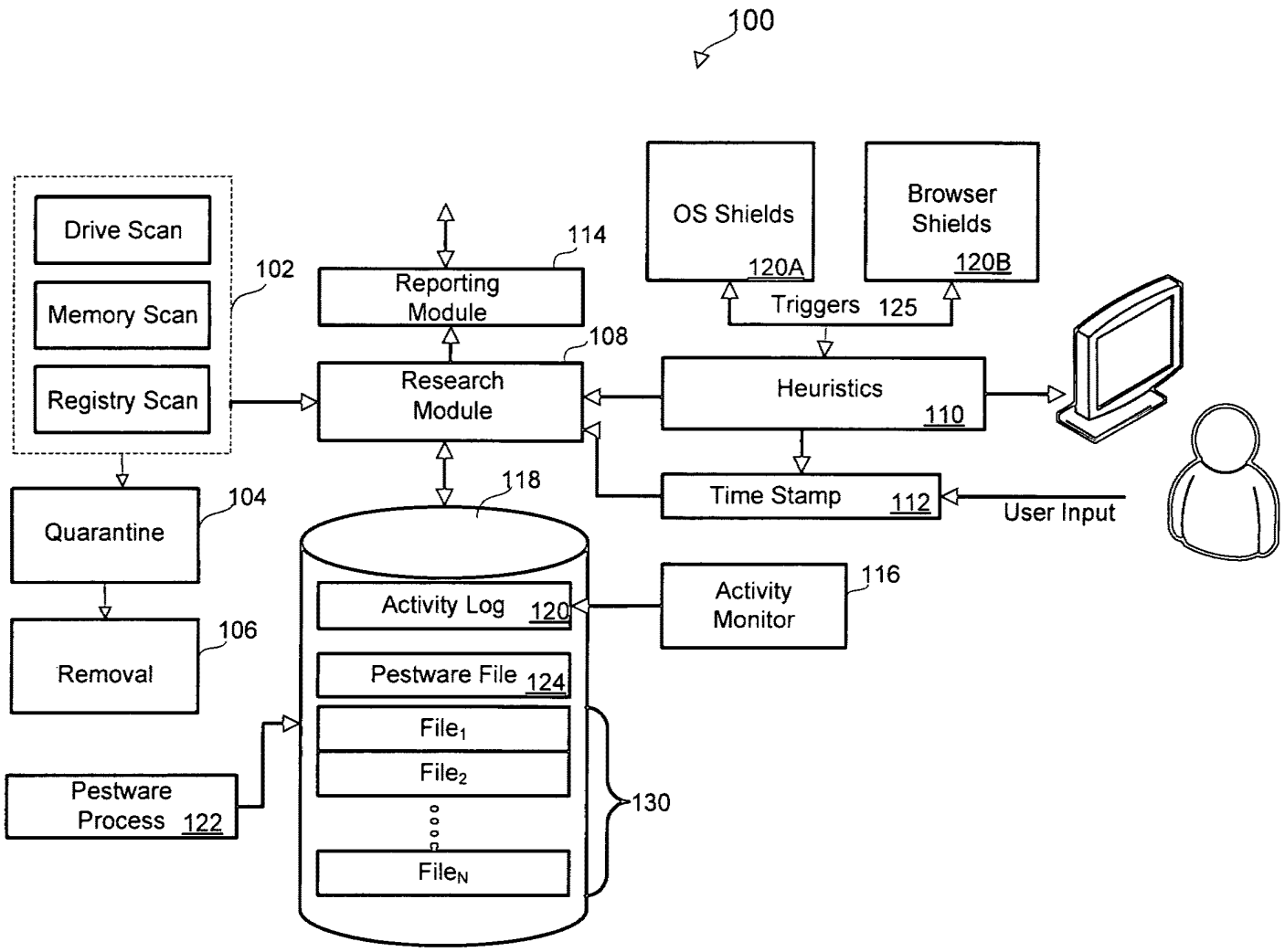

ATTORNEY DOCKET NO. WEBR-044/00US
EXPRESS MAIL NO. EV778911437US

FIGURE 1

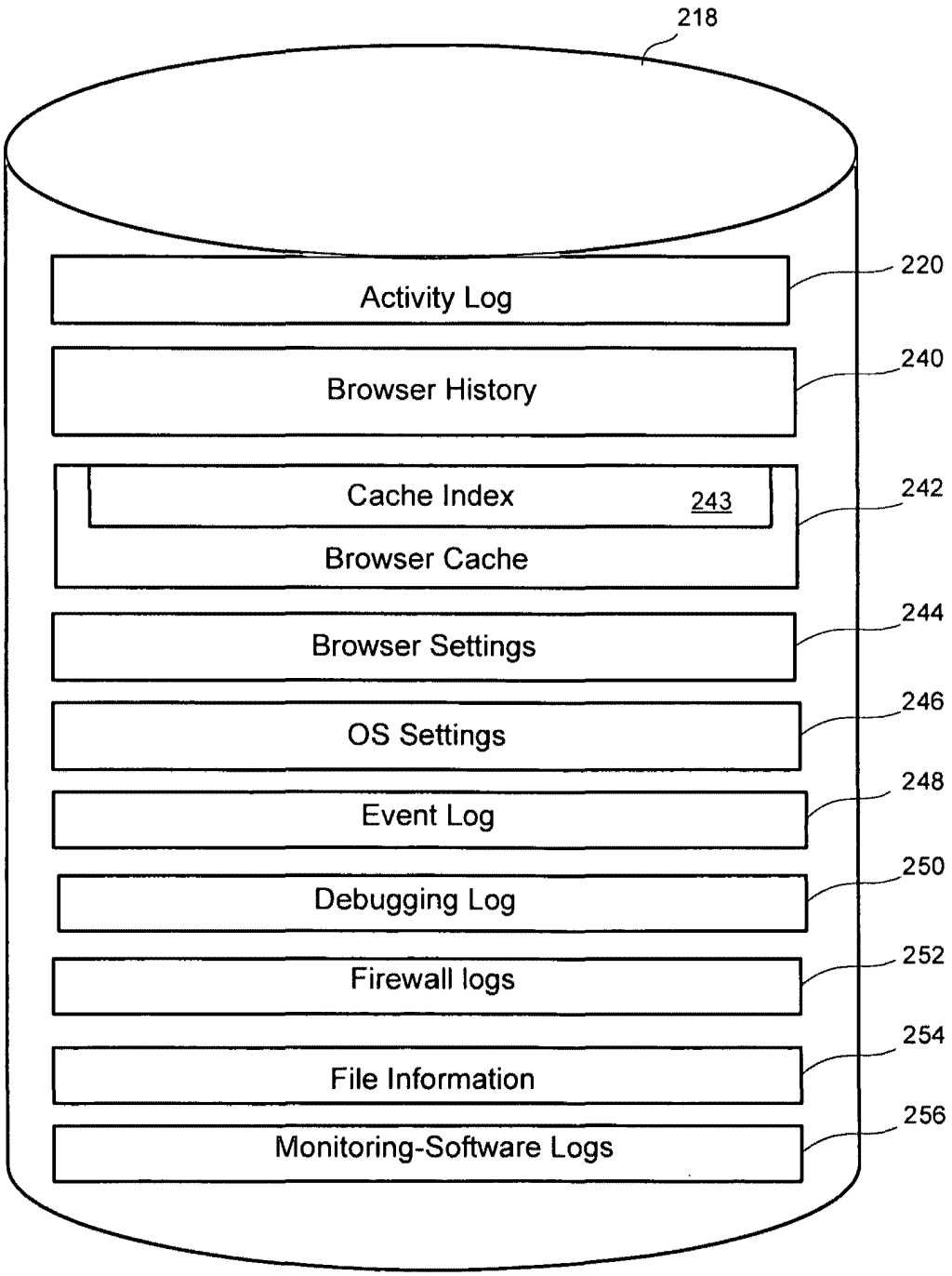

FIGURE 2

ATTORNEY DOCKET NO. WEBR-044/00US
EXPRESS MAIL NO. EV778911437US

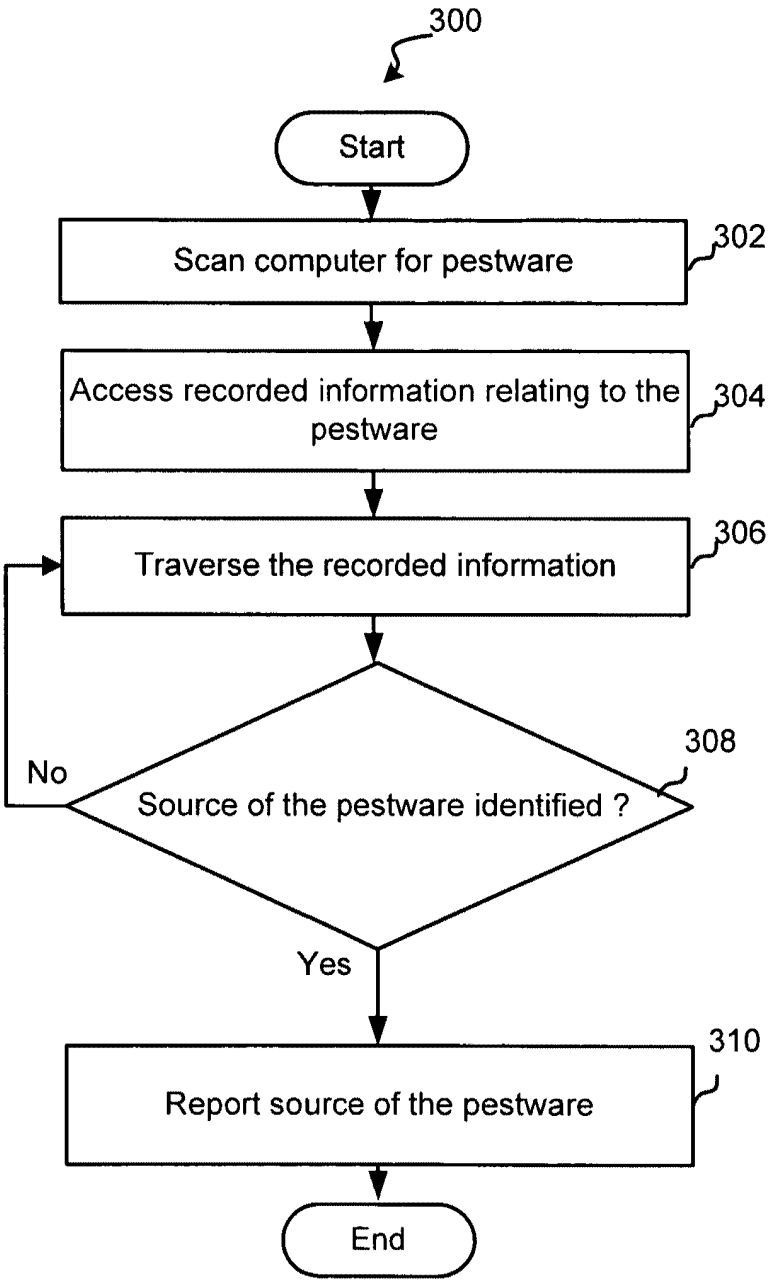

FIGURE 3

ATTORNEY DOCKET NO. WEBR-044/00US
EXPRESS MAIL NO. EV778911437US

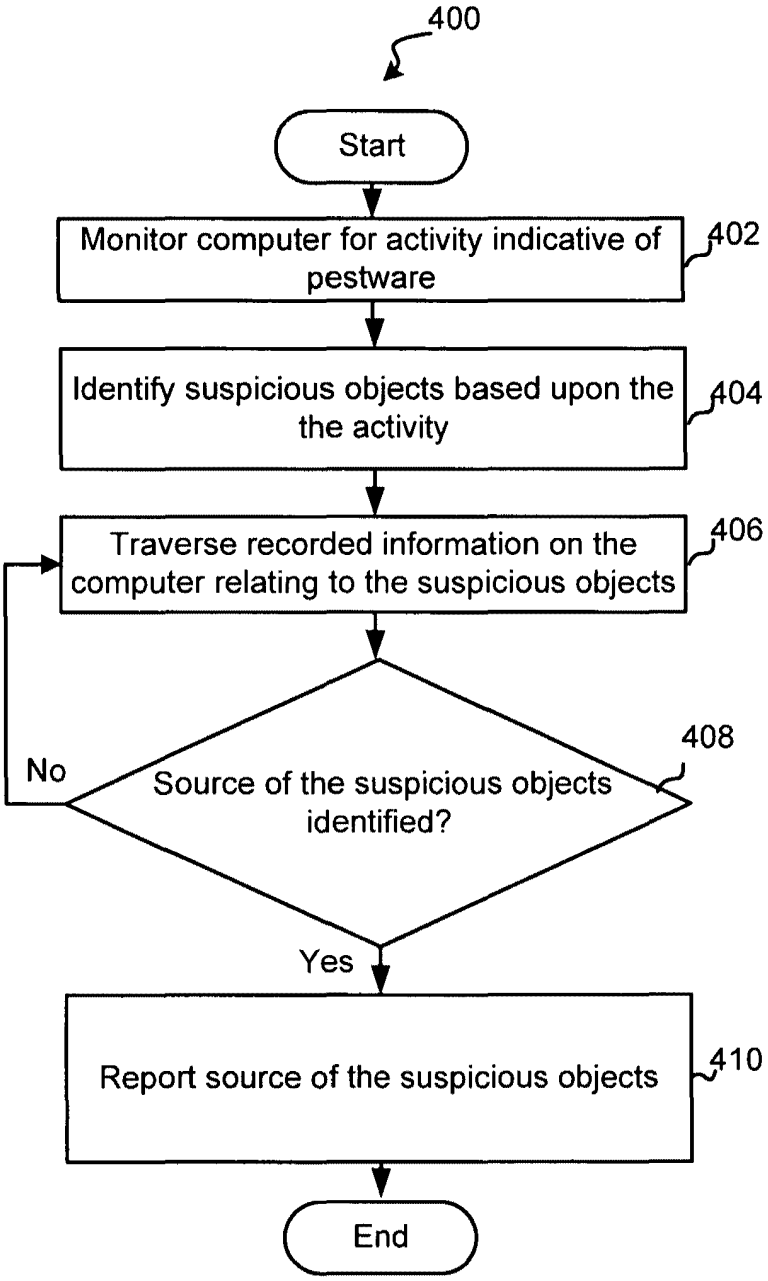

FIGURE 4

ATTORNEY DOCKET NO. WEBR-044/00US
EXPRESS MAIL NO. EV778911437US

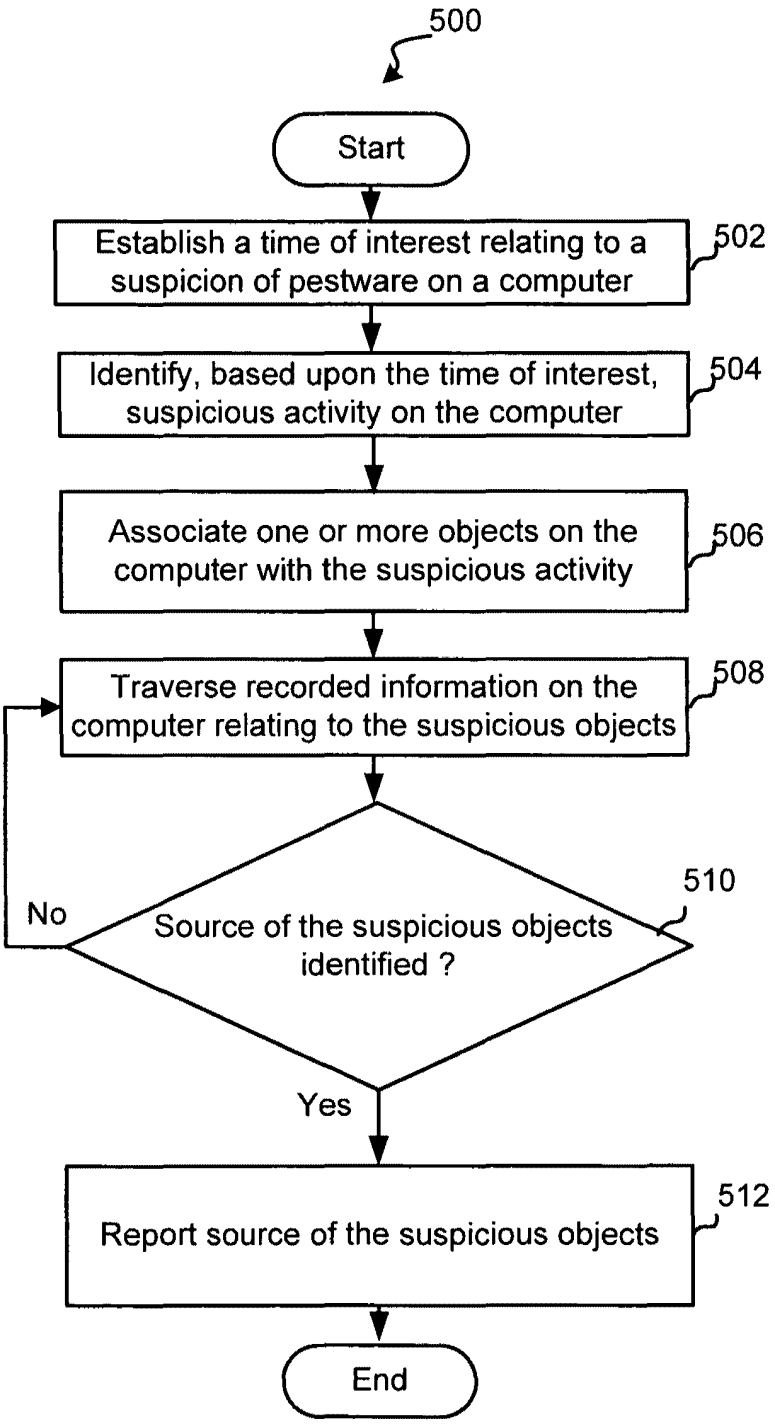

FIGURE 5

ATTORNEY DOCKET NO. WEBR-044/00US
EXPRESS MAIL NO. EV778911437US

PATENT APPLICATION SERIAL NO. _____

U.S. DEPARTMENT OF COMMERCE
PATENT AND TRADEMARK OFFICE
FEE RECORD SHEET

04/24/2006 HTECKLU1 00000081 501283 11408146

01 FC:1011	300.00	DA
02 FC:1111	500.00	DA
03 FC:1311	200.00	DA
04 FC:1202	100.00	DA

PTO-1556
(5/87)

*U.S. Government Printing Office: 2002 — 469-287/69033

PTO/SB/06 (12-04)
Approved for use through 7/31/2006. OMB 0651-0032
U.S. Patent and Trademark Office; U.S. DEPARTMENT OF COMMERCE
Under the Paperwork Reduction Act of 1995, no persons are required to respond to a collection of information unless it displays a valid OMB control number.

PATENT APPLICATION FEE DETERMINATION RECORD

Substitute for Form PTO-875 Effective December 8, 2004

Application or Docket Number: 11408190

APPLICATION AS FILED – PART I

FOR	(Column 1) NUMBER FILED	(Column 2) NUMBER EXTRA	SMALL ENTITY RATE ($)	SMALL ENTITY FEE ($)	OR	OTHER THAN SMALL ENTITY RATE ($)	OTHER THAN SMALL ENTITY FEE ($)
BASIC FEE (37 CFR 1.16(a), (b), or (c))	N/A	N/A	N/A	150.00		N/A	300.00
SEARCH FEE (37 CFR 1.16(k), (l), or (m))	N/A	N/A	N/A	$250		N/A	$500
EXAMINATION FEE (37 CFR 1.16(o), (p), or (q))	N/A	N/A	N/A	$100		N/A	$200
TOTAL CLAIMS (37 CFR 1.16(i))	22 minus 20 =	*	X$ 25 =		OR	X$50 =	100
INDEPENDENT CLAIMS (37 CFR 1.16(h))	3 minus 3 =	*	X100 =			X200 =	
APPLICATION SIZE FEE (37 CFR 1.16(s))	If the specification and drawings exceed 100 sheets of paper, the application size fee due is $250 ($125 for small entity) for each additional 50 sheets or fraction thereof. See 35 U.S.C. 41(a)(1)(G) and 37 CFR 1.16(s).						
MULTIPLE DEPENDENT CLAIM PRESENT (37 CFR 1.16(j))			+180=			+360=	
			TOTAL			TOTAL	1100

* If the difference in column 1 is less than zero, enter "0" in column 2.

APPLICATION AS AMENDED – PART II

		(Column 1) CLAIMS REMAINING AFTER AMENDMENT		(Column 2) HIGHEST NUMBER PREVIOUSLY PAID FOR	(Column 3) PRESENT EXTRA	SMALL ENTITY RATE ($)	SMALL ENTITY ADDI-TIONAL FEE ($)	OR	OTHER THAN SMALL ENTITY RATE ($)	OTHER THAN SMALL ENTITY ADDI-TIONAL FEE ($)
AMENDMENT A	Total (37 CFR 1.16(i))	*	Minus	**	=	X$ 25 =		OR	X$50 =	
	Independent (37 CFR 1.16(h))	*	Minus	***	=	X100 =		OR	X200 =	
	Application Size Fee (37 CFR 1.16(s))									
	FIRST PRESENTATION OF MULTIPLE DEPENDENT CLAIM (37 CFR 1.16(j))					+180=		OR	+360=	
						TOTAL ADD'L FEE		OR	TOTAL ADD'L FEE	

		(Column 1) CLAIMS REMAINING AFTER AMENDMENT		(Column 2) HIGHEST NUMBER PREVIOUSLY PAID FOR	(Column 3) PRESENT EXTRA	RATE ($)	ADDI-TIONAL FEE ($)	OR	RATE ($)	ADDI-TIONAL FEE ($)
AMENDMENT B	Total (37 CFR 1.16(i))	*	Minus	**	=	X$ 25 =		OR	X$50 =	
	Independent (37 CFR 1.16(h))	*	Minus	***	=	X100 =		OR	X200 =	
	Application Size Fee (37 CFR 1.16(s))									
	FIRST PRESENTATION OF MULTIPLE DEPENDENT CLAIM (37 CFR 1.16(j))					+180=		OR	+360=	
						TOTAL ADD'L FEE		OR	TOTAL ADD'L FEE	

* If the entry in column 1 is less than the entry in column 2, write "0" in column 3.
** If the "Highest Number Previously Paid For" IN THIS SPACE is less than 20, enter "20".
*** If the "Highest Number Previously Paid For" IN THIS SPACE is less than 3, enter "3".
The "Highest Number Previously Paid For" (Total or Independent) is the highest number found in the appropriate box in column 1.

This collection of information is required by 37 CFR 1.16. The information is required to obtain or retain a benefit by the public which is to file (and by the USPTO to process) an application. Confidentiality is governed by 35 U.S.C. 122 and 37 CFR 1.14. This collection is estimated to take 12 minutes to complete, including gathering, preparing, and submitting the completed application form to the USPTO. Time will vary depending upon the individual case. Any comments on the amount of time you require to complete this form and/or suggestions for reducing this burden, should be sent to the Chief Information Officer, U.S. Patent and Trademark Office, U.S. Department of Commerce, P.O. Box 1450, Alexandria, VA 22313-1450. DO NOT SEND FEES OR COMPLETED FORMS TO THIS ADDRESS. SEND TO: Commissioner for Patents, P.O. Box 1450, Alexandria, VA 22313-1450.

If you need assistance in completing the form, call 1-800-PTO-9199 and select option 2.

18351 U.S. PTO
042006

Attorney Docket No. WEBR-044/00US **PATENT**

Express Mail Label Number: EV778911437US Date of Deposit: 4/20/06

I hereby certify that this correspondence is being deposited with the United States Postal Service with sufficient postage as Express Mail in an envelope addressed to the Commissioner for Patents, P.O. Box 1450, Alexandria, VA 22313-1450.

By: _____
Daxmara Sanchez

Commissioner for Patents
P.O. Box 1450
Alexandria, VA 22313-1450

112991 U.S. PTO
11/408146
042006

UTILITY PATENT APPLICATION TRANSMITTAL

Transmitted herewith for filing is a U.S. Non-Provisional Utility Patent Application entitled:

BACKWARDS RESEARCHING ACTIVITY INDICATIVE OF PESTWARE

naming as inventors: Matthew L. Boney

and including:

[X] (22) pages of description (before the claims);
[X] (06) pages of claims ((22) total claims; (03) independent claims);
[X] One (1) Sheet of Abstract;
[X] (05) sheets of drawing(s) including Figures 1-5.

1. Also enclosed are:
   - [] Executed Declaration
   - [] Application Data Sheet
   - [] Assignment and Assignment Recordation Cover Sheet
   - [] Power by Assignee
   - [] Assertion of Entitlement to Small Entity Status
   - [] Information Disclosure Statement
   - [] Preliminary Amendment
   - [] CD-ROM or CD-R in duplicate, large table or Computer Program (Appendix)
   - [] Nucleotide and/or Amino Acid Sequence Submission
     - [] Computer Readable Form (CRF) on 3 ½" floppy disk
     - [] Specification Sequence Listing on:
       - [] CD-ROM or CD-R (2 copies); or
       - [] paper

[] The content of the copy in computer readable form is identical to the content of the paper, CD-ROM, or CD-R copy of the Sequence Listing.

[] Nonpublication Request and Certification

[] Check No. XXX in the amount of $XXX for the total fee as calculated below

[X] Return receipt postcard

[] Other: XXX

2. Applicant claims small entity status. See 37 CFR 1.27.

3. The filing fee has been calculated as follows [] and in accordance with the enclosed preliminary amendment:

	NO. OF CLAIMS		EXTRA CLAIMS	RATE	FEE
Basic Application Fee (including filing fee of $300, search fee of $500, examination fee of $200)					$1,000.00
Total Claims	22	- 20 =	02	x $50.00	$100.00
Independent Claims	03	- 3 =	0	x $200.00	$0.0
If multiple dependent claims are presented, add $360.00					
Total Application Fee					$1,100.00
If an Assertion of Entitlement to Small Entity Status is asserted, subtract 50% of Total Application Fee					0
Other fees: (specify)					
TOTAL FEE DUE					$1,100.00

[] This application is being filed without a filing fee. Issuance of a Notice to File Missing Parts of Application is respectfully requested.

[] A check for the total fee is attached.

[X] Please charge $$1,100.00 to Deposit Account No. **50-1283** for the total fee. This paper is being submitted in duplicate.

[X] The Director is hereby authorized to charge any appropriate fees under 37 C.F.R. §§1.16, 1.17, and 1.21 that may be required by this paper, and to credit any overpayment, to Deposit Account No. **50-1283**.

4. Please direct all correspondence concerning this application to:

COOLEY GODWARD LLP
ATTN: Patent Group
One Freedom Square
Reston Town Center
11951 Freedom Drive
Reston, VA 20190-5656
Tel: (720) 566-4035
Fax: (720) 566-4099

CUSTOMER NUMBER: **22903**

COOLEY GODWARD LLP
ATTN: Patent Group
One Freedom Square
Reston Town Center
11951 Freedom Drive
Reston, VA 20190-5656
Tel: (720) 566-4035
Fax: (720) 566-4099

Respectfully submitted,
COOLEY GODWARD LLP

By: _____
Sean R. O'Dowd
Reg. No. 53,403