US 20120221254A1

(19) United States

(12) Patent Application Publication

Kateraas et al.

(10) Pub. No.: US 2012/0221254 A1

(43) Pub. Date: Aug. 30, 2012

(54) DATA COLLECTION UNIT WITH INTEGRATED CLOSURE SYSTEM AND SENSOR HOUSING

(76) Inventors: **Espen D. Kateraas**, Aliso Viejo, CA (US); **Pedro J. Medelius**, Merritt Island, FL (US)

(21) Appl. No.: **13/505,699**

(22) PCT Filed: **Nov. 5, 2010**

(86) PCT No.: **PCT/US2010/055647**

§ 371 (c)(1), (2), (4) Date: **May 2, 2012**

Related U.S. Application Data

(60) Provisional application No. 61/272,812, filed on Nov. 6, 2009, provisional application No. 61/282,012, filed on Dec. 2, 2009.

Publication Classification

(51) **Int. Cl.**

G06F 19/00	(2011.01)
G01P 15/00	(2006.01)
G01K 13/00	(2006.01)
A61B 5/024	(2006.01)

(52) **U.S. Cl.** **702/19**

(57) **ABSTRACT**

A physical activity data collection unit includes one or more infrared sensors configured to provide an output indicative of a pulse rate of a user of the physical activity data collection unit, at least one temperature sensor configured to provide an output indicative of at least a body temperature of the user, and at least one accelerometer configured to provide an output indicative of movements of the user. The physical activity data collection unit can also include a microcontroller configured to determine a pulse rate, a body temperature, and movement characteristics of the user of the data collection unit based on outputs from the one or more infrared sensors, the at least one temperature sensor, and the at least one accelerometer; determine a physical exertion level of the user based on one or more of the pulse rate, the body temperature, or the movement characteristics of the user; and store, in a memory, data indicative of the physical exertion level during a time period during which the physical exertion level exceeds a predetermined threshold. The physical activity data collection unit can also include a closure system configured to secure the data collection unit to a wrist of the user.

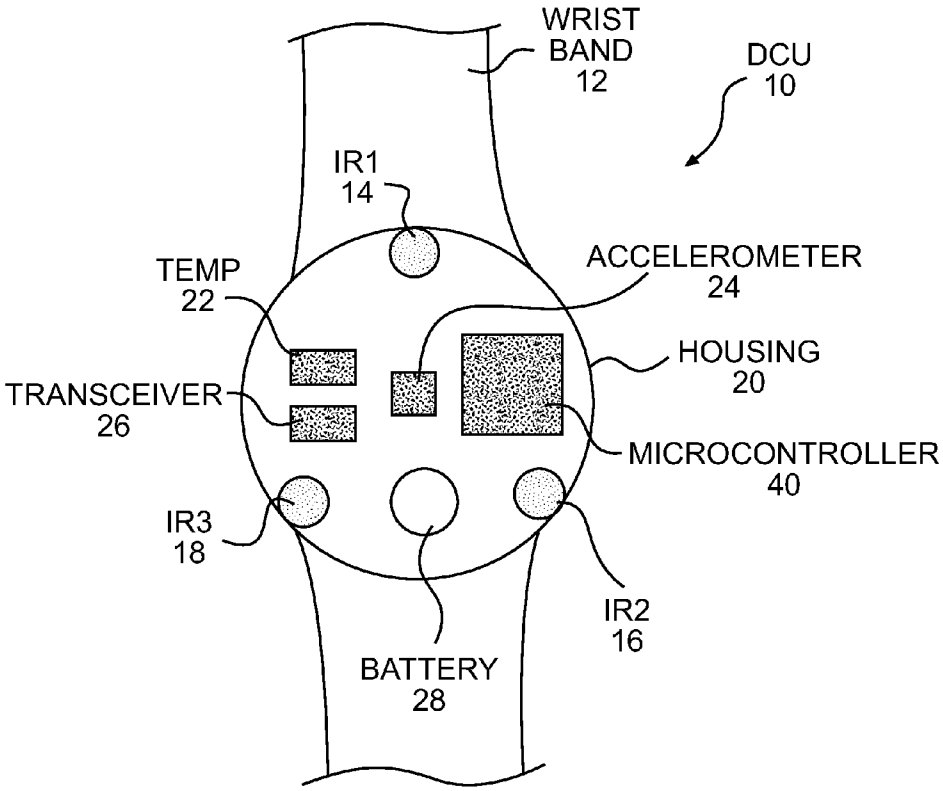

Masimo Ex. 1014
IPR Petition - USP 10,942,491

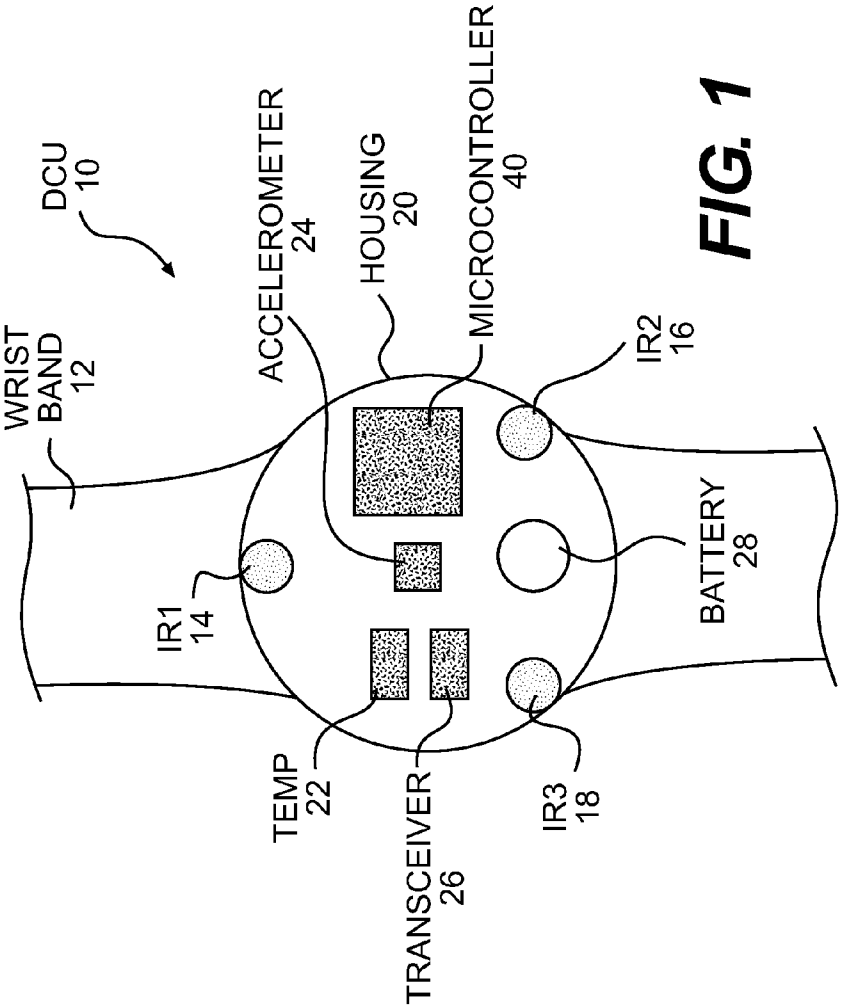

FIG. 1

Masimo Ex. 1014
IPR Petition - USP 10,942,491

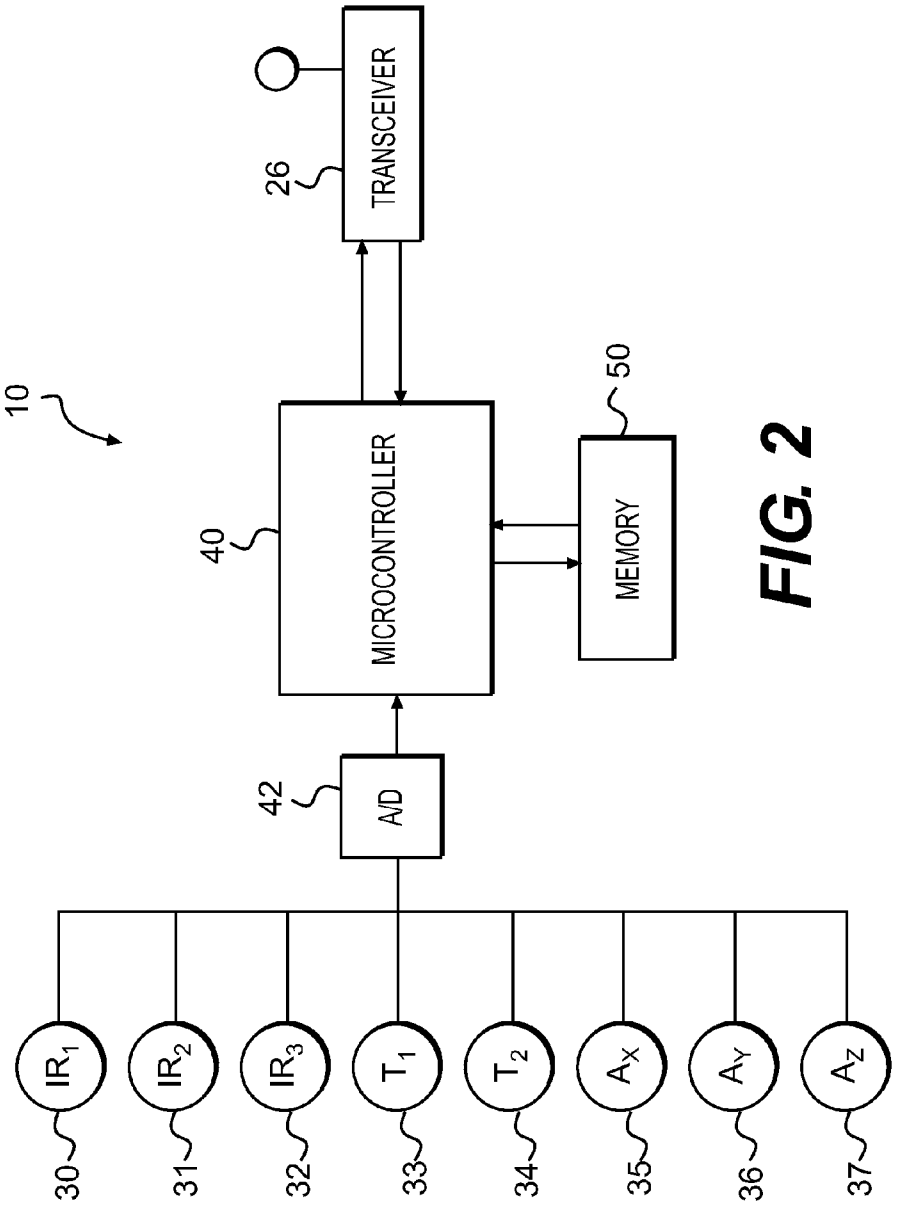

FIG. 2

Masimo Ex. 1014
IPR Petition - USP 10,942,491

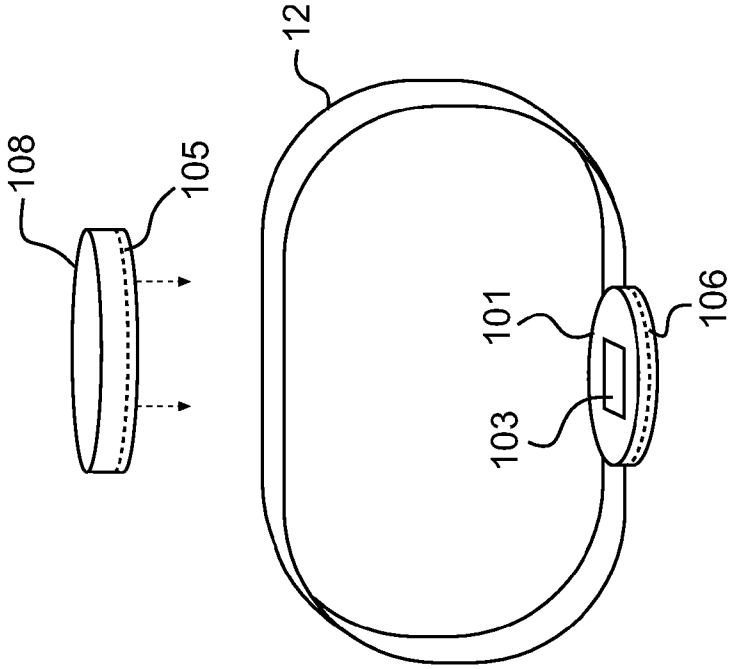

FIG. 3

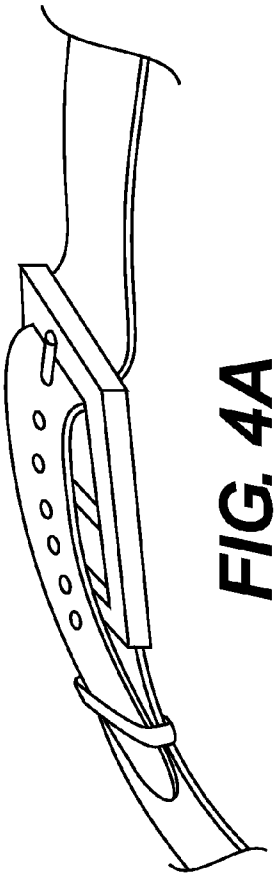

FIG. 4A

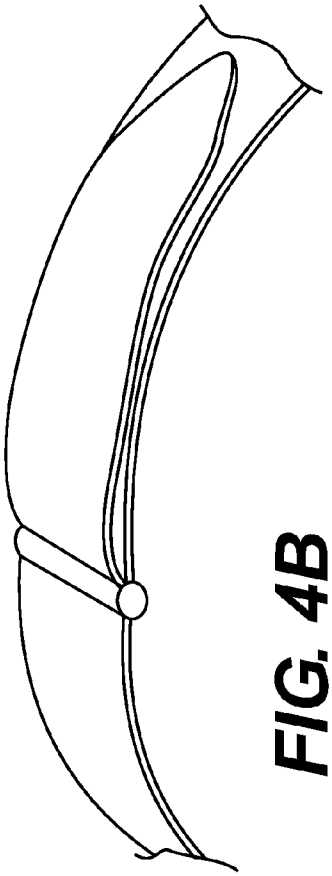

FIG. 4B

Masimo Ex. 1014
IPR Petition - USP 10,942,491

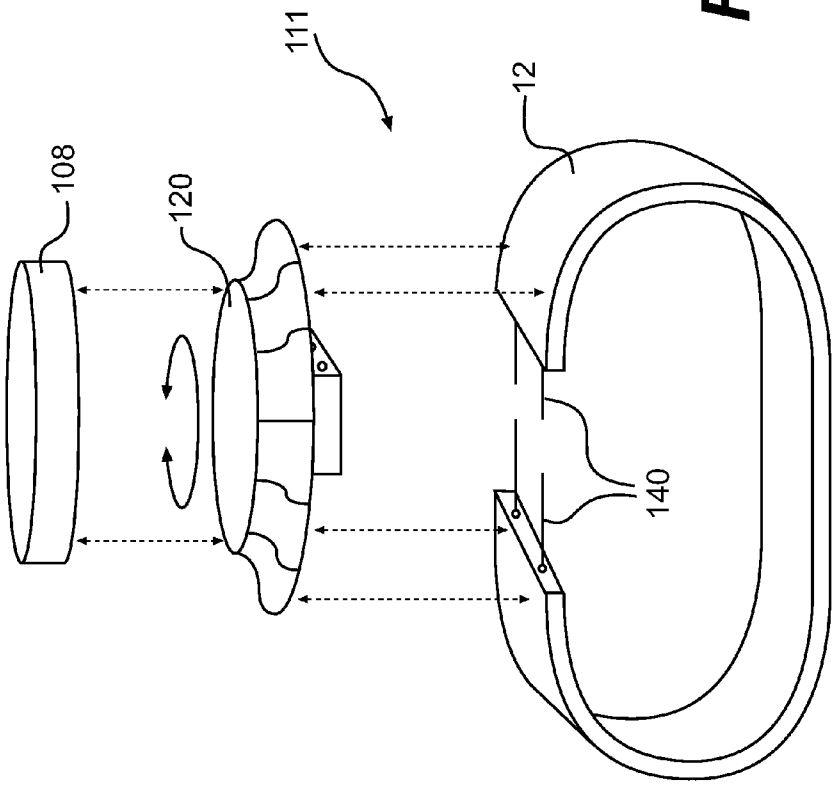

FIG. 5

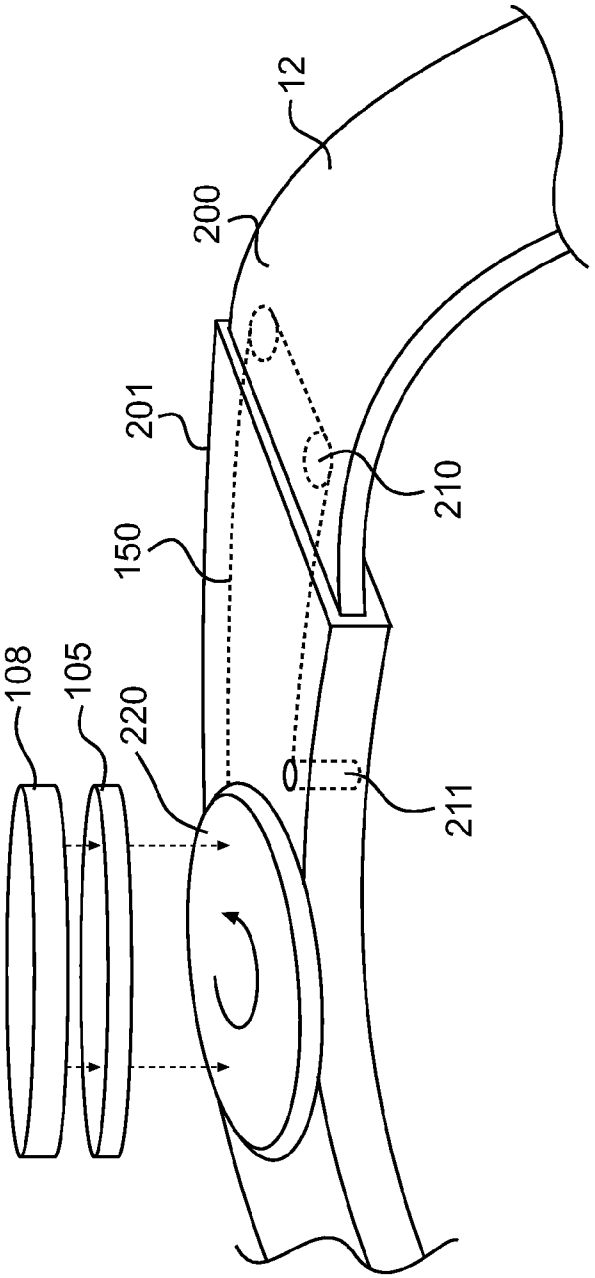

FIG. 6

DATA COLLECTION UNIT WITH INTEGRATED CLOSURE SYSTEM AND SENSOR HOUSING

[0001] This application claims priority to U.S. Provisional Application No. 61/272,812, filed Nov. 6, 2009, the contents of which are incorporated herein by reference. This application further claims priority to U.S. Provisional Application No. 61/282,012, filed Dec. 2, 2009, the contents of which are incorporated herein by reference.

TECHNICAL FIELD

[0002] This is a patent application relating to a sensor-based device configured to monitor the physical activity level of an individual, collect data during periods of physical exertion, and transmit the collected data to a data collection portal associated with a physical activity rewards allocation system and/or a physical activity tracking system.

SUMMARY OF THE INVENTION

[0003] One aspect of the disclosure includes a physical activity data collection unit that includes one or more infrared sensors configured to provide an output indicative of a pulse rate of a user of the physical activity data collection unit, at least one temperature sensor configured to provide an output indicative of at least a body temperature of the user, and at least one accelerometer configured to provide an output indicative of movements of the user. The physical activity data collection unit can also include a microcontroller configured to determine a pulse rate, a body temperature, and movement characteristics of the user of the data collection unit based on outputs from the one or more infrared sensors, the at least one temperature sensor, and the at least one accelerometer; determine a physical exertion level of the user based on one or more of the pulse rate, the body temperature, or the movement characteristics of the user; and store, in a memory, data indicative of the physical exertion level during a time period during which the physical exertion level exceeds a predetermined threshold. The physical activity data collection unit can also include a closure system configured to secure the data collection unit to a wrist of the user.

BRIEF DESCRIPTION OF THE DRAWINGS

[0004] FIG. **1** is a diagrammatic representation of a data collection unit according to an exemplary disclosed embodiment.

[0005] FIG. **2** is a functional block level diagram of a data collection unit according to an exemplary disclosed embodiment.

[0006] FIG. **3** is a diagrammatic representation of a data collection unit according to an exemplary disclosed embodiment.

[0007] FIGS. **4**A and **4**B are diagrammatic representations of closure systems for a data collection unit according to exemplary disclosed embodiments.

[0008] FIG. **5** is a diagrammatic representation of a closure system for a data collection unit according to an exemplary disclosed embodiment.

[0009] FIG. **6** is a diagrammatic representation of a closure system for a data collection unit according to an exemplary disclosed embodiment.

DETAILED DESCRIPTION

[0010] FIG. **1** provides diagrammatic representation of a data collection unit according to an exemplary disclosed embodiment. As illustrated in FIG. **1**, the disclosed data collection unit **10** may be configured as a wearable article. In certain embodiments, for example, the data collection unit may be incorporated into an article wearable on an individual's wrist. Such an article would offer the advantage of being minimally intrusive, as most people are accustomed to wearing articles fastened to the wrist. The wrist unit could be fashioned as a simple wrist band stylized in various colors and patterns. The band may be adjustable, shockproof, and secured to the wrist using a hook and loop closure, a buckle closure, an elastic material requiring no separate closure device, or with any other suitable fastening configuration. The band can be made from various materials including, for example, a waterproof material, neoprene, polymer, nylon, leather, metal, or any other wearable material.

[0011] In one embodiment, data collection unit **10** may be embedded into a small, self-contained wrist band **12**. In such a configuration, there may be little or no external indication of the presence of the hardware components of the data collection unit. In other embodiments, the data collection unit may be incorporated into a watch, bracelet, heart rate monitor or other wearable article to provide added functionality to those devices. In addition to the wrist, the disclosed data collection unit may be positioned over any portion of a user's body (e.g., the neck, chest, ankle, head, or thigh) that can provide suitable access to the biological markers needed for monitoring the user's level of physical exertion. For example, the data collection unit may be configured as or incorporated into shoe soles, ear clips, a necklace, ankle band, sock, belt, glove, ring, sunglasses, hat, helmet, cap, and/or a headband.

[0012] Data collection unit **10** includes a sensor array (including one or more sensors) configured to monitor biological markers that vary with the level of exertion of an individual. The monitored biological markers may include, for example, pulse rate, body temperature, blood oxygen content, or any other suitable marker. Within the sensor array, each sensor may be configured to monitor only a single biological marker. Alternatively, an individual sensor in the array may be configured to monitor multiple biological markers.

[0013] In one embodiment, data collection unit **10** may include several sensors. These sensors may include any arrangement of one or more sensors capable of monitoring biological characteristics and/or movement associated with a user of data collection unit **10**. In one exemplary embodiment, as shown in FIG. **1**, data collection unit **10** may include at least one infrared sensor **14**, a temperature sensor **22**, and/or an accelerometer **24**.

[0014] In the exemplary embodiment shown in FIG. **1**, data collection unit **10** includes three infrared sensors **14**, **16**, **18**. Suppliers of appropriate infrared transmitter/receivers include Vishay Semiconductors, among others.

[0015] Each infrared sensor may be configured as a transmitter/receiver capable of monitoring the oxygen content of blood passing through nearby blood vessels. Specifically, each infrared sensor can be configured to both emit infrared radiation into the body of the wearer of data collection unit **10** and detect the level of infrared radiation received at the sen-

Masimo Ex. 1014
IPR Petition - USP 10,942,491

sor. The wavelength of the emitted radiation can be selected according to the requirements of a particular application. In one embodiment, infrared sensors **14**, **16**, and **18** can be configured to emit infrared radiation in a wavelength range of about 650 nm to about 950 nm.

[0016] The difference between the emitted radiation level and the detected radiation level is characteristic of the amount of infrared radiation absorbed by the body and, especially, by oxygen-carrying blood. This sensed absorption level can be used to determine the pulse rate of the wearer of data collection unit **10**. Particularly, the infrared absorption level may be affected by the expansion and contraction of nearby blood vessels and the oxygen content of blood passing through nearby vessels, which are both physical characteristics that vary together with heart rate. Thus, the rate of observed changes in infrared absorption characteristics of the body can enable a calculation of the wearer's heart rate.

[0017] While only one infrared sensor may be needed depending on the functional requirements of a particular embodiment, including two or more infrared sensors, or even three or more infrared sensors, can serve to increase the reliability of the data collected from these sensors. As illustrated in FIG. **1**, infrared sensors **14**, **16**, and **18** may be spaced apart from one another. In certain embodiments, these sensors may be located along a perimeter of a central housing **20** of data collection unit **10**. Spacing infrared sensors **14**, **16**, and **18** apart from one another can maximize the possibility that at least one sensor contacts the wearer's skin at all times, even during the movements associated with physical activities.

[0018] A power management scheme may be employed to lower the power requirements of infrared sensors **14**, **16**, and **18**. For example, the transmitter portion of each sensor may be pulsed at a predetermined duty cycle to conform to the power specifications of a particular configuration. In one exemplary embodiment, the infrared transmitters of sensors **14**, **16**, and **18** can be pulsed using a 1% duty cycle at a rate of about 8 pulses per second.

[0019] Data collection unit **10** may also include a temperature sensor **22**. Temperature sensor **22** may be configured to monitor the body temperature of the wearer of data collection unit **10** by measuring the temperature outside of housing **20** and, for example, against the skin of the wearer. Additionally, temperature sensor **22** may be configured to measure the temperature inside housing **20**. Using the difference between the temperature measurements from inside and outside of housing **20**, it can be determined whether an observed temperature change outside of the housing is likely attributable to atmospheric conditions or an actual change in body temperature of the wearer of data collection unit **10**. While certain embodiments may include only one temperature sensor, other embodiments may include multiple temperature sensors in order to meet a desired set of operational characteristics (e.g., monitoring body temperature from multiple locations on data collection unit **10**; separate temperature sensors to monitor the temperature inside and outside of housing **20**; etc.).

[0020] Temperature sensor **22** may include any suitable device for ascertaining the body temperature of an individual. For example, temperature sensor **22** may include a digital or analog device and may include thermocouples, diodes, resistance temperature detectors (RTDs), or infrared detectors. Suitable temperature sensors may be obtained from various suppliers, including Analog Devices Inc., Omega, or Texas Instruments. For certain types of temperature sensors, contact with the individual's skin may aid in obtaining accurate body temperature measurements. On the other hand, in certain instances where, for example, infrared sensors provide the primary mode of measuring body temperature, mere proximity to the individual's skin may be sufficient to accurately determine body temperature of the user.

[0021] Additionally, data collection unit **10** may include an accelerometer **24** to monitor motion of data collection unit **10**. In certain embodiments, accelerometer **24** includes only a single axis accelerometer configured to detect motion along one axis. Other embodiments, however, may include multiple accelerometers. In one exemplary embodiment, accelerometer **24** may include a three-axis accelerometer, which includes three accelerometers arranged orthogonally with respect to one another. With such an arrangement, accelerometer **24** may be able to detect or monitor movements along three separate axes.

[0022] A three-axis accelerometer may be especially useful for the detection of movements associated with exercise and certain types of physical activity. Generally, most sports or types of physical activity produce a signature pattern of movements that can be detected using an accelerometer. In this way, accelerometer **24** can help confirm whether the wearer of data collection unit **10** is engaged in physical activity and, in certain cases, can help determine the type of sport or activity in which the wearer is engaged. Such sport or activity determination can be performed onboard data collection unit **10** or, alternatively or additionally, may be performed in a server or other computing device located remotely from data collection unit **10**.

[0023] Other embodiments of data collection unit **10** may include additional or different sensors. For example, data collection unit **10** may include a carbon dioxide detector, additional accelerometers, a breathing rate sensor, or any other type of sensor suitable for monitoring physical activity levels.

[0024] In addition to the infrared sensors described above, the pulse of the wearer of data collection unit **10** may be ascertained using any other type of sensor suitable for monitoring the wearer's heart rate. In one embodiment, for example, electro-cardiogram based technology may be incorporated into data collection unit **10**.

[0025] Data collection unit **10** may also include a transceiver **26** for establishing communication with devices external to data collection unit **10**. To address power requirements, data collection unit **10** may also include a battery **28**.

[0026] FIG. **2** provides a schematic, functional block level diagram of data collection unit **10**, according to an exemplary disclosed embodiment. Within data collection unit **10**, several sensed quantities can be provided to a microcontroller **40** for processing. For example, these sensed quantities may include outputs **30**, **31**, and **32** from infrared sensors **14**, **16**, and **18**, respectively. Additionally, these sensed quantities may include temperature sensor outputs **33** and **34**. Temperature output **33** may correspond to the temperature inside housing **20**, for example, and temperature output **34** may correspond to the observed temperature outside of housing **20**. The sensed quantities may also include accelerometer outputs **35**, **36**, and **37**, each corresponding to a unique axis of movement.

[0027] Microcontroller **40** can store the data associated with the sensed quantities in a memory **50** in raw form or, alternatively, after processing. Further, the data relating to the sensed quantities can be transmitted to a remote location by transceiver unit **26**.

Masimo Ex. 1014
IPR Petition - USP 10,942,491

[0028] Any suitable microcontroller **40** may be included in data collection unit **40**. In one embodiment, microcontroller **40** includes a small microcontroller having dimensions of about 0.4 inches by 0.4 inches, or smaller. One suitable microcontroller includes the PIC18F series of microcontroller manufactured by Microchip Inc. Preferably, microcontroller **40** would exhibit low power characteristics and would require from about 10 microamps to about 50 microamps during normal operation and between 5 milliamps to about 20 milliamps while transmitting data.

[0029] Microcontroller **40** of data collection unit **10** has several responsibilities. Among these responsibilities, microcontroller **40** periodically collects data from the available sensors via an analog-to-digital converter **42**. The frequency of data collection can be selected to meet the requirements of a particular application. In one embodiment, microcontroller **40** may sample the data from the sensors at least once per second. Higher or lower sampling frequencies, however, may also be possible.

[0030] Microcontroller **40** may be configured with the ability for selecting from among multiple data sampling frequencies depending on sensed conditions. For example, microcontroller **40** may be programmed to sample the sensor outputs slower than once per second (e.g., once per every 10 seconds) when microcontroller **40** determines that the user of the device is at rest or at a normal level of physical exertion. Similarly, microcontroller **40** may be configured to sample the sensor outputs more frequently (e.g., at least once per second) when the user's physical exertion level exceeds a predetermined threshold. In certain embodiments, and during periods of physical exertion, microcontroller **40** may collect sensor data up to five times per second, ten times per second, or even more, to ensure that rapidly changing quantities such as pulse rate and blood oxygen, which may cycle on the order of 200 times per minute during periods of extreme physical exertion, can be accurately evaluated.

[0031] When appropriate, microcontroller **40** may also enter a rest state to conserve power. For example, when infrared sensors **14**, **16**, or **18** provide no pulse readings or accelerometer **24** registers no movements over a certain period of time, microcontroller **40** may determine that data collection unit **10** is not being worn. Under such conditions, microcontroller **40** may slow the sensor sampling period to once every thirty seconds, once every minute, or to another suitable sampling frequency. Additionally, microcontroller **40** may be configured to sample only a portion of the available sensors during times of physical inactivity or when data collection unit **10** is not being worn. In one embodiment, for example, once microcontroller **40** determines that the user is not wearing data collection unit **10**, microcontroller **40** may begin sampling the output of temperature sensor **22** alone. In such a configuration, a perceived rapid change in temperature may indicate that data collection unit **10** is in use and may prompt the controller to "wake up" and restore full functioning data collection.

[0032] Microcontroller **40** may also be configured to sample data from only a portion of the available sensors during times of physical activity. For example, during certain activities or conditions, microcontroller **40** may recognize that one or more of the available sensors is providing data suitable for recognizing and/or characterizing physical activity. Microcontroller **40** may also be configured to recognize when other sensors are providing data that would make recognizing and/or characterizing physical activity more difficult. For example, in certain situations, infrared sensors **14**, **16**, or **18** may provide robust data from which accurate pulse readings may be determined while accelerometer **24** or temperature sensor **22** may provide less robust data (e.g., low signal level, lower than average signal-to-noise ratio, intermittent signal, etc.). In such situations, microcontroller **40** may determine a particular set of sensors to rely upon more heavily when choosing which sensors to sample and what sensor output to use (and how to use it) when analyzing data, capturing data, and/or transmitting data.

[0033] Microcontroller **40** can be configured to analyze the data collected from the sensors onboard data collection unit **10**. For example, data from infrared sensors **14**, **16**, **18** can be used to compare the transmitted infrared signal to the received infrared signal and calculate the blood oxygen saturation level via known algorithms. Microcontroller **40** may also be configured to calculate the pulse rate by monitoring the frequency of changes in the blood oxygen saturation level.

[0034] As noted above, microcontroller **40** can be configured to store raw or processed data in memory **50** included in data collection unit **10**. Memory **50** may include any suitable storage unit including, for example, a solid state non-volatile serial or parallel access memory. In certain embodiments, the memory may include a storage capacity of at least 32 MB. Suitable memory units include RAM, NVRAM, and Flash memory. It is also possible to use an internal microcontroller memory to store data, especially if microcontrollers are developed that include internal memory sizes greater than the currently available 64 kB sizes.

[0035] In the case that microcontroller **40** is configured to store raw data, microcontroller **40** may sample the outputs of the sensors onboard data collection unit **10** and simply store those values in memory **50**. Those stored values can then later be downloaded from data collection unit **10** and processed using devices and/or systems external to data collection unit **10**.

[0036] While it is possible to store raw data collected from the sensor devices, microcontroller **40** may also be configured to process the data sampled from the sensors of data collection unit **10** prior to storage in memory **50**. For example, microcontroller **40** may be configured to calculate pulse rate, temperature, acceleration and average each calculated value over periods of up to thirty seconds, sixty seconds, or more to remove noise and enhance accuracy of the readings. Microcontroller **40** can be further configured to store these time averaged, filtered pulse rate/temperature/acceleration readings at preselected intervals (e.g., once or twice per minute). Such a scheme may conserve memory and/or power resources yet still provide useful information. These processed or conditioned data signals stored in memory, in certain cases, can even be more useful, as they may exhibit less noise and rapidly fluctuating values, which can detract from the reliability of the data.

[0037] Microcontroller **40** may be configured to condition the signals received from one or more of the sensors onboard data collection unit **10**. During movement associated with physical activity, a significant amount of noise may be imparted to the signals generated by the onboard sensors. Such noise is especially prevalent in the data provided by the infrared sensors, which can be used to determine heart rate. Digital signal processing techniques may be employed to eliminate at least some of the noise from these signals and increase the accuracy of the heart rate calculation.

Masimo Ex. 1014
IPR Petition - USP 10,942,491

[0038] Microcontroller **40** may also be configured to determine when the user is at rest and when the user is exercising. In addition to using this information to control the data collection and storage rates, this information can be used, for example, in conjunction with a physical activity rewards allocation system to provide rewards-based incentives to the user of data collection unit **10**. That is, the user of data collection unit **10** may receive rewards in the form of merchandise, merchandise discounts, currency, and/or free or discounted services based on the amount of time the user spends exercising and/or upon the level of physical exertion during exercise. The information may also be used to track physical activity levels for purposes of assessing the physical activity profile of individuals. For example, the information may be tracked and used to determine the physical fitness, health, or well-being of private or public employees in order to provide worker incentives. Alternatively or additionally, this information could be used by the insurance industry to set rates/premiums tailored to an individual or discounted for a group of individuals participating in a physical activity tracking program.

[0039] Microcontroller **40** can be configured to determine when the user's level of activity qualifies as exercise. For example, microcontroller **40** can assimilate one or more of the user's pulse rate, temperature, and acceleration levels into a exercise evaluation score. Comparing the exercise evaluation score with a predetermined threshold level (which may be unique to each individual user), microcontroller **40** can determine that the user is exercising when the exercise evaluation score exceeds the threshold.

[0040] The microcontroller's accuracy in determining the physical activity level or exertion level of a user can be refined according to any desired algorithm. In one embodiment, for example, microcontroller **40** may be configured to determine the relative reliability of the data provided by the sensors onboard data collection unit **10** and assign weighting factors (e.g., values between 0 and 1) to those outputs based on the perceived reliability of the data from each output. For example, if one of the infrared sensors is emitting a stable, oscillating output signal with a low noise level and another is emitting a noisy signal, then microcontroller **40** can assign a higher weighting factor to the higher quality signal and a lower weight to the noisy signal. In this way, microcontroller **40** can minimize the effects of extraneous noise and low quality data and maximize the measurement reliability when high quality data output signals are available.

[0041] Microcontroller **40** can be programmed with a common baseline threshold for use with all users of the disclosed data collection unit **10**. Alternatively, microcontroller **40** may be used to calculate and periodically update a unique threshold determined for a specific user of a particular data collection unit. For example, as the user wears and uses data collection unit **10** over a period of time, microcontroller **40** may "learn" about the user by monitoring and storing quantities (e.g., heart rate, acceleration levels, and temperature) associated with periods during which the user is at rest and exercising. Using a predefined exercise threshold algorithm, the microcontroller can use this information to tailor the exercise threshold and store a new, updated exercise threshold based on the current fitness level of the user. The predefined algorithm may be loaded into the microcontroller's operating instruction set upon manufacture and may be updated via download from a central server system.

[0042] Ultimately, microcontroller **40** can be configured to determine when the user's level of physical activity surpasses the exercise threshold. Once the user exceeds the exercise threshold, the microcontroller may start a timer that monitors the amount of time the user spends above the exercise threshold. Further, via the sensed pulse rate, temperature, and acceleration levels measured, microcontroller **40** can determine and store a quantity that tracks the amount by which the user's physical activity exceeds the exercise threshold. This information, together or separate from exercise time, may be used by microcontroller **40** or, more preferably, a remote rewards allocation system to determine a rewards quantity accrued by the user during each period of exercise. Alternatively or additionally, this information can be used by a physical activity tracking system to determine worker incentives or to set/adjust insurance rates/premiums.

[0043] Data collection unit **10** may also include a feedback element, including, for example, a display, light, audible speaker, or other suitable sensory interface device. During periods when the user's physical activity exceeds the exercise threshold and qualifies for rewards accrual, microcontroller **40** may activate the feedback element to indicate to the user that the exercise threshold has been exceeded and rewards are being accrued. For example, an LED may be included that blinks during periods of qualifying exercise. In other embodiments, a speaker may emit an audible beep every few seconds during periods of qualifying exercise. In still other embodiments, a rewards indicator may be projected on a display during qualifying exercise sessions. Such an embodiment would be especially useful where data collection unit **10** was incorporated into a watch or other type of device including a display.

[0044] Microcontroller **40** of data collection unit **10** may be configured to control transmission of data to one or more remote locations. In one embodiment, microcontroller **40** can activate transceiver **26**, as illustrated in FIG. **2**, with a low duty cycle of less than about 1% to detect the presence of suitable data collection portals. A data collection portal can include any intended recipient of the data acquired by data collection unit **10**. In one embodiment, a data collection portal may be associated with a physical activity rewards allocation system and may forward the data received from data collection unit **10** to a central management facility that handles the operation of the rewards system. In another embodiment, the data collection portal may be associated with a threshold exercise tracking system for purposes of determining the physical fitness, health, or well-being of private and public employees for worker incentives. The data collection portal may also be associated with an insurance rate/premium setting system that tailors rates or adjusts premiums based on the physical activity level of individuals and/or groups.

[0045] When data collection unit **10** detects a data collection portal (e.g., either through a wired or wireless data connection) and communication is established, download of the data will commence, for example, after proper identification of the user and of the portal has been achieved. This may prevent eavesdropping by unauthorized parties. Identification of the user may include transmission of a unique code assigned to each data collection unit and/or user of the data collection unit. A user-selectable password can be used to allow data to be downloaded by the data collection portal. In other embodiments, passive identification of a user may displace the need for password protected downloads. For example, the microcontroller may be configured to determine

Masimo Ex. 1014
IPR Petition - USP 10,942,491

and store a biological signature of an authorized user of the data collection unit. Such a signature may be determined using the same array of sensors used monitor temperature, pulse rate, and acceleration levels. Alternatively, one or more additional sensors (e.g., a skin pigment sensor, pH sensor, etc.) may be included to aid in user recognition.

[0046] One or more other devices, including, e.g., an RFID tag may be employed to facilitate the transmission of data to a data collection portal. For example, in response to a radio frequency interrogation signal, an RFID tag located on data collection unit **10** may power on using an onboard power source, such as battery **28**, or using energy provided by the interrogation signal. The RFID tag can respond to the interrogation signal by transmitting data to a location/receiver remotely located with respect to data collection unit **10**. The information transmitted may include information about data collection unit **10**. For example, the transmitted information may include a signature code associated with a particular data collection unit **10**. Additionally, the transmitted information may include any other data that may aid in recognition of the particular data collection unit **10**. Such an RFID tag may be attached or integrated with data collection unit **10** at any suitable location. For example, an RFID tag may be included in housing **20** (FIG. **1**), battery holder **105**, battery holder **106**, cradle **108**, housing **101** (FIGS. **3**, **5**, **6**), or at any other suitable location on data collection unit **10** or along band **12**.

[0047] Alternatively or additionally, an RFID tag or other similar device for transmitting data from data collection unit **10** (e.g., microcontroller **40** coupled with transceiver **26**) may be used to transmit information about the user of data collection unit **10**. This information can include, for example, medical emergency data, insurance information, name, home address, phone numbers, vital statistics, allergies, blood type, etc.

[0048] The transmitted information may also be used to recognize an individual wearer of data collection unit **10**. For example, based on a particular piece of information (e.g., a signature code, name, address, etc.) an interrogating device or data portal may "recognize" the wearer of data collection unit **10**. In response, the receiver of this information may take some action based on the recognition of the user of data collection unit **10**. In certain embodiments, such information may be used to determine the location of a user of data collection unit **10**; determine the frequency that the user visits a particular establishment, such as a health club, spa, pools; etc.

[0049] Data collection unit **10** may also be configured to detect potentially fraudulent use by a user. For example, because the user may receive rewards based on an indication by data collection unit **10** that the user had engaged in qualifying physical activity for a certain period of time, certain individuals may be motivated to simulate a state of physical activity, wear multiple data collection units, or engage in other types of fraudulent activity. With the robust sensor array included in data collection unit **10**, the likelihood of data collection unit **10** being "fooled" by simulated physical activity is minimized.

[0050] Additionally, microcontroller **40** may be configured to generate and deliver a low power, low duty cycle pulse to metal contacts located, e.g., on the base of housing **20**. These pulses may have a duration of less than about 100th of a millisecond per pulse and will be transmitted over short distances around data collection unit **10**. The same metal contacts on the base of housing **20** can also serve as an antenna and can aid in detection of similar signals in close proximity. When such a signal is detected, it may indicate that a user is wearing more than one data collection unit devices. If the detected signal remains constant over a certain period of time, further suggesting that more than one data collection unit **10** is in use by a single user, then either the emitting or detecting data collection unit, or both, may be configured to shut down.

[0051] Suitable data collection portals may include those located within a predetermined distance from data collection unit **10**. In certain embodiments, data collection unit **10** may be configured to transmit data to portals located within about ten feet. In other embodiments, this transmission distance may be extended up to about 50 feet.

[0052] Once transmission of data stored in data collection unit **10** commences, a handshaking process may be employed to validate the integrity of the data transmitted and to request retransmission of the data, if necessary. After data collection unit **10** establishes that the data has been successfully transmitted to the data collection portal, microcontroller **40** can delete the previously stored data.

[0053] Transmission of data to a data collection portal may also be controlled based on the availability of stored data. For example, if no new data has been stored in memory **50** since the last successful download, then microcontroller **40** may determine that there is nothing to transmit. Under these conditions, microcontroller **40** may forego searching for a suitable data collection portal within range and will leave the data collection unit transceiver **26** powered down until data is subsequently stored in memory.

[0054] Other schemes for data transmission initiation may be employed. For example, rather than the microcontroller periodically searching for a suitable data collection portal within range, microcontroller **40** may be configured to simply respond to an interrogation signal continuously or periodically emitted from a data collection portal. If microcontroller **40** receives such an interrogation and determines that the emitting data collection portal is within transmission range, then microcontroller **40** can activate transceiver **26** and commence data transmission.

[0055] Data transmission may be accomplished via any suitable scheme for transmission of data. In one embodiment, the data stored in the data collection unit may be transferred via a wired connection including a cable and cable interface. In one embodiment, data transmission can be accomplished via a USB data cable that enables charging of data collection unit **10** while data is downloaded. Data transmission may also be accomplished via a wireless connection including a radio frequency or optical transmission link. In certain embodiments, for example, data collection unit **10** can be Bluetooth or Zigbee enabled or may transmit data via an infrared optical link.

[0056] In certain embodiments, data transmission can extend beyond the limits of the onboard transceiver. For example, using a Bluetooth enabled data collection unit coupled with an external device, such as a cell phone, PDA, personal computer, etc., data can be relayed from data collection unit **10** through the external device and on to a data collection portal or even directly to the management facility.

[0057] Data collection unit **10** may include any suitable power source for meeting the power requirements of the unit. For example, data collection unit **10** may include a replaceable or rechargeable battery **28**. In certain embodiments, three-volt lithium batteries contained within a **1.2** cm package may be included in data collection unit **10**. Additionally, or

Masimo Ex. 1014
IPR Petition - USP 10,942,491

alternatively, a solar cell may be included either alone or in combination with one or more batteries. In addition to serving as a stand alone power source, the solar cell may also function to recharge the batteries. In another embodiment, a motion activated regeneration device may be included for purposes of powering the data collection unit and/or recharging batteries.

[0058] The sensors included in data collection unit **10** may be located together in a single housing **101**, as shown in FIG. **3**. In one embodiment, accelerometer **24**; infrared sensors **14**, **16**, and **18**; and/or temperature sensor **22** (and any combinations thereof) may be integrated together to form a sensor array, for example, on a common printed circuit board. While this sensor array could be located at any position along wrist band **12**, in one embodiment, the sensor array is located in housing **101** located at the point along wrist band **12** that is adjacent to the underside of the wrist of a user. In this configuration, the sensor array, or portions thereof, could be made to contact the underside of the user's wrist when data collection unit **10** is worn.

[0059] Housing **101** may include a window **103**, fabricated from an infrared transmissive or transparent material, for example, to allow radiation emitted from infrared sensors **14**, **16**, and **18** to pass out of housing **101** and impinge upon the underside of the user's wrist. In turn, window **103** also allows infrared radiation reflected or emitted from the user's skin to pass into housing **101** via window **103**. Such infrared transmissive or transparent materials for window **103** may include, e.g., germanium, zinc selenide, sapphire, IR glass, IR polymer, barium fluoride, calcium fluoride, and combinations thereof. In certain embodiments, one or more of infrared sensors **14**, **16**, and/or **18** may be embedded directly into the material of window **103**. Such a configuration may offer enhanced sensitivity by placing the infrared sensors **14**, **16**, and/or **18** close to the user's skin, among other potential benefits.

[0060] Housing **101** can be constructed of a material different from wrist band **12**. For example, housing **101** may be fabricated from a polymer, metal, rubber, or any other material suitable for a desired application. In certain embodiments, housing **101** can be constructed from a conducting material to establish an electrical or thermal conduction path, if desired, between any of the sensors of data collection unit **10** and the skin of the user.

[0061] Housing **101** can also be formed integrally with wrist band **12**. In such an embodiment, housing **101** would be formed of the same material as wrist band **12** and may have the same thickness, or a slightly thicker profile, as compared to wrist band **12**.

[0062] Battery **28** may include a single battery. Alternatively, battery **28** may include multiple individual batteries connected in series, in parallel, or, alternatively, configured to separately and independently provide power to various electrical components of data collection unit **10**.

[0063] Battery **28** may be mounted within or adjacent to housing **101**. In certain embodiments, battery **28** may be positioned in a battery holder **106** adjacent to housing **101**. Battery holder **106** may be formed separately from housing **101** and may be attached to housing **101**. Alternatively, battery holder **106** may be formed as an integral part (or an internal part) of housing **101**.

[0064] In other embodiments battery **28** may be mounted in a holder spaced apart from housing **101**. For example, a battery holder **105** may be attached to wrist band **12** to hold battery **28** in an area of wrist band **12** located directly opposite from housing **101**. In this embodiment, wrist band **12** may include a flexible wiring harness disposed within an internally molded chamber that connects housing **101** with battery holder **105**. In this manner, power from the battery **28** can be supplied to the electronics and sensor array located in housing **101**. Via this channel and flexible wiring harness, a communication path can be established between 1) the sensors, microcontroller **40**, transceiver **26**, and any other electronic elements located in housing **101** and 2) any other electronics (e.g., a display unit or communication device, etc.) located remotely with respect to housing **101** along wrist band **12** (e.g., in battery holder **105**).

[0065] Certain other embodiments may include batteries and corresponding battery holders spaced apart from one another. For example, in one embodiment, as shown in FIG. **3**, a first battery (or battery bank) may be housed within battery holder **106** and, at the same time, another battery (or battery bank) could be housed within battery holder **105**.

[0066] Data collection unit **10** can also be configured to include a cradle **108** that is either mounted to or integrated with battery holder **105**, as shown in FIG. **3**. Alternatively, cradle **108** can be mounted to or integrally formed with wrist band **12**. Cradle **108** can be configured to receive and retain various items. For example, cradle **108** may be configured to provide one half of a standardized mating system such that components fitted with the other half of the mating system can be removably attached to cradle **108**. Such components may include, e.g., watches, GPS units, heart rate monitors, general display units, or any other desired device. In certain embodiments, such units retained by cradle **108** may communicate with the sensors of data collection unit **10** (e.g., using a wiring harness routed within wrist band **12** or via a wireless communication path). In this manner, data from the sensors, either processed by the microprocessor **40** or unprocessed, could be collected, analyzed, and/or displayed by various units attached to cradle **108**.

[0067] Data collection unit **10** may include any type of closure system suitable for securing data collection unit **10** to the wrist of a user. In one embodiment, for example, where the sensors, electronics, and/or batteries are not located on the underside of wrist strap **12**, data collection unit **10** may employ a pin and hole type closure system shown in FIG. **4**A. Data collection unit **10** may also include a hook and loop closure system as shown in FIG. **4**B.

[0068] In other embodiments, data collection unit **10** may include a closure system **111**, as shown in FIG. **5**. In this embodiment, a wrist band **12** may include an opening near the top of the band. The opening may be configured to receive a closure member **120** that engages one or more tensioning elements **140**. Closure member **120** may include an internal ratcheting mechanism that winds in or otherwise tightens tensioning elements **140** when closure member **120** is turned. Tightening tensioning elements **140** results in tightening of wrist band **12** against the wrist of the wearer. To release the tension on tensioning elements **140** and, thereby, loosen wrist band **12**, closure member **120** may be turned in the opposite direction. Alternatively, or additionally, closure member **120** may include a release button that releases the internal ratcheting mechanism and allows tensioning elements **140** to loosen.

[0069] In another embodiment, data collection unit may include a closure system **112** fitted to wrist band **12**, as shown in FIG. **6**. Wrist band **12** may include a sheath configuration such that a portion **200** of wrist band **12** is configured to slide

Masimo Ex. 1014
IPR Petition - USP 10,942,491

within a slightly thicker portion **201** of wrist band **12**. Closure system **112** may include a dial wheel **220** that engages with tensioning elements **140**. A tensioning element **150** may be internally routed through portion **201** of wrist band **12** such that it is led to retention pins **210** fixed within portion **200** of wrist band **12**. Tension element **150** may be slideably attached to retention pins **210** and fixedly attached to an anchor **211** housed internal to portion **201** of wrist band **12**. Closure system **112** may be configured such that turning of dial wheel **220** causes tensioning element **150** to wind around a spool (not shown) coupled to dial wheel **220**. Winding of tensioning element **150** in one direction causes portion **200** of wrist band **12** to extend into portion **201**, thereby tightening wrist band **12** about the user's wrist. Loosening may be accomplished by rotating dial wheel **220** in the opposite direction.

[0070] In certain embodiments a cradle **108** and/or a battery holder **105**, as described above, may be configured to attach to closure member **120** (FIG. **5**) and/or dial wheel **220** (FIG. **6**). Alternatively, cradle **108** and/or battery holder **105** may be formed integrally with closure member **120** and/or dial wheel **220**.

[0071] In yet another embodiment, the sensors included in data collection unit **10** may be located together with (or integrated with) the elements of data collection unit **10** that form the closure system. For example, closure member **120** (FIG. **5**) may also serve as a housing that includes accelerometer **24**; infrared sensors **14**, **16**, and **18**; and/or temperature sensor **22** (and any combinations thereof). Additionally, dial wheel **220** (FIG. **6**) may be configured to serve as a housing that includes accelerometer **24**; infrared sensors **14**, **16**, and **18**; and/or temperature sensor **22** (and any combinations thereof). In such embodiments, window **103** may be located on a bottom portion of either closure member **120** or dial wheel **220** to enable transmission of infrared radiation between a user's skin/body and infrared sensors **14**, **16**, and **18**.

[0072] It will be apparent to those skilled in the art that various modifications and variations can be made in the disclosed sensor unit without departing from the scope of the disclosure. Other embodiments of the disclosed systems and methods will be apparent to those skilled in the art from consideration of the specification and practice of the disclosure disclosed herein.

What is claimed is:

1. A physical activity data collection unit, including:

one or more infrared sensors configured to provide an output indicative of a pulse rate of a user of the physical activity data collection unit;

at least one temperature sensor configured to provide an output indicative of at least a body temperature of the user;

at least one accelerometer configured to provide an output indicative of movements of the user;

a microcontroller configured to:

determine a pulse rate, a body temperature, and movement characteristics of the user of the data collection unit based on outputs from the one or more infrared sensors, the at least one temperature sensor, and the at least one accelerometer;

determine a physical exertion level of the user based on one or more of the pulse rate, the body temperature, or the movement characteristics of the user; and

store, in a memory, data indicative of the physical exertion level during a time period during which the physical exertion level exceeds a predetermined threshold; and

a closure system configured to secure the data collection unit to a wrist of the user.

2. The physical activity data collection unit of claim **1**, wherein the closure system includes a pin and hole type configuration.

3. The physical activity data collection unit of claim **1**, wherein the closure system includes a hook and loop configuration.

4. The physical activity data collection unit of claim **1**, wherein the closure system includes rotational element configured to act on one or more tensioning elements in order to tighten the data collection to the wrist of the user.

5. The physical activity data collection unit of claim **4**, further including a battery holder coupled to the rotational element.

6. The physical activity data collection unit of claim **4**, further including a cradle coupled to the rotational element.

7. The physical activity data collection unit of claim **4**, wherein the one or more infrared sensors, the at least one temperature sensor, and the at least one accelerometer are located within the rotational element.

8. The physical activity data collection unit of claim **4**, further including a battery holder and cradle integrally formed with the rotational element.

9. The physical activity data collection unit of claim **1**, further including a transceiver, and wherein the microcontroller is further configured to transmit data indicative of the exertion level of the user to an external data collection portal.

10. The physical activity data collection unit of claim **9**, wherein the microcontroller determines the presence of stored physical exertion data and automatically initiates transmission of the stored data upon determining that the data collection has come within a predetermined range of a data collection portal.

11. The physical activity data collection unit of claim **9**, wherein the microcontroller determines the presence of stored physical exertion data and initiates transmission of the stored data upon receiving an interrogation signal from a data collection portal.

12. The physical activity data collection unit of claim **9**, wherein the transceiver is configured to transmit data via an optical or radio frequency link.

13. The physical activity data collection unit of claim **1**, wherein the microcontroller is further configured to update the predetermined threshold based on the fitness of the user.

14. The physical activity data collection unit of claim **1**, wherein the at least one temperature sensor includes at least one of a thermocouple, diode, resistive temperature device, or infrared device.

15. The physical activity data collection unit of claim **1**, wherein the one or more infrared sensors each include an infrared transceiver unit.

16. The physical activity data collection unit of claim **15**, wherein the pulse rate is determined by monitoring changes in the blood oxygen saturation level.

17. The physical activity data collection unit of claim **1**, wherein the microcontroller is configured to condition the output signals provided by the one or more infrared sensors, the at least one temperature sensor, or the at least one accelerometer and store conditioned signals in the memory.

Masimo Ex. 1014
IPR Petition - USP 10,942,491

18. The physical activity data collection unit of claim **1**, wherein the microcontroller is configured to recognize potentially fraudulent use of the data collection unit and take at least one action in response to the recognized potentially fraudulent use.

19. The physical activity data collection unit of claim **18**, wherein the microcontroller is configured to:

generate a signal to be emitted by the data collection unit;

detect the presence of similar signals generated in the vicinity of the data collection unit; and

shut down the data collection unit if potentially fraudulent use is recognized based on the detection of the similar signals.

20. The physical activity data collection unit of claim **1**, further including an RFID tag to aid in recognition of the data collection unit or the user of the data collection unit.

21. The physical activity data collection unit of claim **1**, wherein the microcontroller is configured to communicate a unique code associated with the data collection unit to aid in recognition of the data collection unit.

22. The physical activity data collection unit of claim **1**, wherein the microcontroller is configured to apply variable weights to the outputs of the one or more infrared sensors, the at least one temperature sensor, or the at least one accelerometer when determining the physical exertion level of the user.

* * * * *

Masimo Ex. 1014
IPR Petition - USP 10,942,491