3GPP TS 36.212 V13.0.0 (2015-12)

Technical Specification

3rd Generation Partnership Project; Technical Specification Group Radio Access Network; Evolved Universal Terrestrial Radio Access (E-UTRA); Multiplexing and channel coding (Release 13)

The present document has been developed within the 3rd Generation Partnership Project (3GPP TM) and may be further elaborated for the purposes of 3GPP.
The present document has not been subject to any approval process by the 3GPP Organizational Partners and shall not be implemented.
This Specification is provided for future development work within 3GPP only. The Organizational Partners accept no liability for any use of this Specification.
Specifications and reports for implementation of the 3GPP TM system should be obtained via the 3GPP Organizational Partners' Publications Offices.

Keywords
UMTS, radio, Layer 1

3GPP

Postal address

3GPP support office address
650 Route des Lucioles – Sophia Antipolis
Valbonne – France
Tel. : +33 4 92 94 42 00 Fax : +33 4 93 65 47 16

Internet
http://www.3gpp.org

Copyright Notification

No part may be reproduced except as authorized by written permission.
The copyright and the foregoing restriction extend to reproduction in all media.

© 2015, 3GPP Organizational Partners (ARIB, ATIS, CCSA, ETSI, TSDSI, TTA, TTC).
All rights reserved.

UMTS™ is a Trade Mark of ETSI registered for the benefit of its members
3GPP™ is a Trade Mark of ETSI registered for the benefit of its Members and of the 3GPP Organizational Partners
LTE™ is a Trade Mark of ETSI registered for the benefit of its Members and of the 3GPP Organizational Partners
GSM® and the GSM logo are registered and owned by the GSM Association

Contents

Foreword....5
1 Scope....6
2 References....6
3 Definitions, symbols and abbreviations....6
3.1 Definitions....6
3.2 Symbols....6
3.3 Abbreviations....7
4 Mapping to physical channels....8
4.1 Uplink....8
4.2 Downlink....8
4.3 Sidelink....8
5 Channel coding, multiplexing and interleaving....9
5.1 Generic procedures....9
5.1.1 CRC calculation....9
5.1.2 Code block segmentation and code block CRC attachment....10
5.1.3 Channel coding....11
5.1.3.1 Tail biting convolutional coding....12
5.1.3.2 Turbo coding....13
5.1.3.2.1 Turbo encoder....13
5.1.3.2.2 Trellis termination for turbo encoder....14
5.1.3.2.3 Turbo code internal interleaver....14
5.1.4 Rate matching....16
5.1.4.1 Rate matching for turbo coded transport channels....16
5.1.4.1.1 Sub-block interleaver....16
5.1.4.1.2 Bit collection, selection and transmission....17
5.1.4.2 Rate matching for convolutionally coded transport channels and control information....19
5.1.4.2.1 Sub-block interleaver....20
5.1.4.2.2 Bit collection, selection and transmission....21
5.1.5 Code block concatenation....22
5.2 Uplink transport channels and control information....22
5.2.1 Random access channel....22
5.2.2 Uplink shared channel....22
5.2.2.1 Transport block CRC attachment....23
5.2.2.2 Code block segmentation and code block CRC attachment....24
5.2.2.3 Channel coding of UL-SCH....24
5.2.2.4 Rate matching....24
5.2.2.5 Code block concatenation....24
5.2.2.6 Channel coding of control information....24
5.2.2.6.1 Channel quality information formats for wideband CQI reports....38
5.2.2.6.2 Channel quality information formats for higher layer configured subband CQI reports....42
5.2.2.6.3 Channel quality information formats for UE selected subband CQI reports....52
5.2.2.6.4 Channel coding for CQI/PMI information in PUSCH....59
5.2.2.6.5 Channel coding for more than 11 bits of HARQ-ACK information....60
5.2.2.7 Data and control multiplexing....60
5.2.2.8 Channel interleaver....61
5.2.3 Uplink control information on PUCCH....63
5.2.3.1 Channel coding for UCI HARQ-ACK....64
5.2.3.2 Channel coding for UCI scheduling request....70
5.2.3.3 Channel coding for UCI channel quality information....70
5.2.3.3.1 Channel quality information formats for wideband reports....71
5.2.3.3.2 Channel quality information formats for UE-selected sub-band reports....77
5.2.3.4 Channel coding for UCI channel quality information and HARQ-ACK....85
5.2.4 Uplink control information on PUSCH without UL-SCH data....86
5.2.4.1 Channel coding of control information....86

Samsung Exhibit 1017, Page 3 of 121

5.2.4.2 Control information mapping ... 87
5.2.4.3 Channel interleaver ... 87
5.3 Downlink transport channels and control information ... 88
5.3.1 Broadcast channel ... 88
5.3.1.1 Transport block CRC attachment ... 88
5.3.1.2 Channel coding ... 89
5.3.1.3 Rate matching ... 89
5.3.2 Downlink shared channel, Paging channel and Multicast channel ... 89
5.3.2.1 Transport block CRC attachment ... 90
5.3.2.2 Code block segmentation and code block CRC attachment ... 90
5.3.2.3 Channel coding ... 91
5.3.2.4 Rate matching ... 91
5.3.2.5 Code block concatenation ... 91
5.3.3 Downlink control information ... 91
5.3.3.1 DCI formats ... 92
5.3.3.1.1 Format 0 ... 92
5.3.3.1.2 Format 1 ... 93
5.3.3.1.3 Format 1A ... 95
5.3.3.1.3A Format 1B ... 97
5.3.3.1.4 Format 1C ... 98
5.3.3.1.4A Format 1D ... 99
5.3.3.1.5 Format 2 ... 100
5.3.3.1.5A Format 2A ... 104
5.3.3.1.5B Format 2B ... 106
5.3.3.1.5C Format 2C ... 107
5.3.3.1.5D Format 2D ... 109
5.3.3.1.6 Format 3 ... 110
5.3.3.1.7 Format 3A ... 111
5.3.3.1.8 Format 4 ... 111
5.3.3.1.9 Format 5 ... 113
5.3.3.2 CRC attachment ... 113
5.3.3.3 Channel coding ... 114
5.3.3.4 Rate matching ... 114
5.3.4 Control format indicator ... 114
5.3.4.1 Channel coding ... 115
5.3.5 HARQ indicator (HI) ... 115
5.3.5.1 Channel coding ... 115
5.4 Sidelink transport channels and control information ... 115
5.4.1 Sidelink broadcast channel ... 115
5.4.1.1 Transport block CRC attachment ... 116
5.4.1.2 Channel coding ... 116
5.4.1.3 Rate matching ... 116
5.4.2 Sidelink shared channel ... 117
5.4.3 Sidelink control information ... 117
5.4.3.1 SCI formats ... 117
5.4.3.1.1 SCI format 0 ... 117
5.4.4 Sidelink discovery channel ... 118

Annex A (informative): Change history ... 119

Samsung Exhibit 1017, Page 4 of 121

Foreword

This Technical Specification has been produced by the 3rd Generation Partnership Project (3GPP).

The contents of the present document are subject to continuing work within the TSG and may change following formal TSG approval. Should the TSG modify the contents of the present document, it will be re-released by the TSG with an identifying change of release date and an increase in version number as follows:

Version x.y.z

where:

x the first digit:

1 presented to TSG for information;

2 presented to TSG for approval;

3 or greater indicates TSG approved document under change control.

Y the second digit is incremented for all changes of substance, i.e. technical enhancements, corrections, updates, etc.

z the third digit is incremented when editorial only changes have been incorporated in the document.

Samsung Exhibit 1017, Page 5 of 121

1 Scope

The present document specifies the coding, multiplexing and mapping to physical channels for E-UTRA.

2 References

The following documents contain provisions which, through reference in this text, constitute provisions of the present document.

- References are either specific (identified by date of publication, edition number, version number, etc.) or non-specific.
- For a specific reference, subsequent revisions do not apply.
- For a non-specific reference, the latest version applies. In the case of a reference to a 3GPP document (including a GSM document), a non-specific reference implicitly refers to the latest version of that document *in the same Release as the present document*.

[1] 3GPP TR 21.905: "Vocabulary for 3GPP Specifications".

[2] 3GPP TS 36.211: "Evolved Universal Terrestrial Radio Access (E-UTRA); Physical channels and modulation".

[3] 3GPP TS 36.213: "Evolved Universal Terrestrial Radio Access (E-UTRA); Physical layer procedures".

[4] 3GPP TS 36.306: "Evolved Universal Terrestrial Radio Access (E-UTRA); User Equipment (UE) radio access capabilities".

[5] 3GPP TS36.321, “Evolved Universal Terrestrial Radio Access (E-UTRA); Medium Access Control (MAC) protocol specification”

[6] 3GPP TS36.331, “Evolved Universal Terrestrial Radio Access (E-UTRA); Radio Resource Control (RRC) protocol specification”

3 Definitions, symbols and abbreviations

3.1 Definitions

For the purposes of the present document, the terms and definitions given in [1] and the following apply. A term defined in the present document takes precedence over the definition of the same term, if any, in [1].

Definition format

<defined term>: *<definition>.*

3.2 Symbols

For the purposes of the present document, the following symbols apply:

$N_{\mathrm{RB}}^{\mathrm{DL}}$	Downlink bandwidth configuration, expressed in number of resource blocks [2]
$N_{\mathrm{RB}}^{\mathrm{UL}}$	Uplink bandwidth configuration, expressed in number of resource blocks [2]
$N_{\mathrm{RB}}^{\mathrm{SL}}$	Sidelink bandwidth configuration, expressed in number of resource blocks [2]

$N_{\text{sc}}^{\text{RB}}$	Resource block size in the frequency domain, expressed as a number of subcarriers
$N_{\text{symb}}^{\text{PUSCH}}$	Number of SC-FDMA symbols carrying PUSCH in a subframe
$N_{\text{symb}}^{\text{PUSCH-initial}}$	Number of SC-FDMA symbols carrying PUSCH in the initial PUSCH transmission subframe
$N_{\text{symb}}^{\text{UL}}$	Number of SC-FDMA symbols in an uplink slot
$N_{\text{symb}}^{\text{SL}}$	Number of SC-FDMA symbols in a sidelink slot
N_{SRS}	Number of SC-FDMA symbols used for SRS transmission in a subframe (0 or 1).

3.3 Abbreviations

For the purposes of the present document, the following abbreviations apply:

BCH	Broadcast channel
CFI	Control Format Indicator
CP	Cyclic Prefix
CSI	Channel State Information
DCI	Downlink Control Information
DL-SCH	Downlink Shared channel
EPDCCH	Enhanced Physical Downlink Control channel
FDD	Frequency Division Duplexing
HI	HARQ indicator
LAA	Licensed-Assisted Access
MCH	Multicast channel
PBCH	Physical Broadcast channel
PCFICH	Physical Control Format Indicator channel
PCH	Paging channel
PDCCH	Physical Downlink Control channel
PDSCH	Physical Downlink Shared channel
PHICH	Physical HARQ indicator channel
PMCH	Physical Multicast channel
PMI	Precoding Matrix Indicator
PRACH	Physical Random Access channel
PSBCH	Physical Sidelink Broadcast Channel
PSCCH	Physical Sidelink Control Channel
PSDCH	Physical Sidelink Discovery Channel
PSSCH	Physical Sidelink Shared Channel PUCCH Physical Uplink Control channel
PUSCH	Physical Uplink Shared channel
RACH	Random Access channel
RI	Rank Indication
SCI	Sidelink Control Information
SL-BCH	Sidelink Broadcast Channel
SL-DCH	Sidelink Discovery Channel
SL-SCH	Sidelink Shared Channel
SR	Scheduling Request
SRS	Sounding Reference Signal
TDD	Time Division Duplexing
TPMI	Transmitted Precoding Matrix Indicator
UCI	Uplink Control Information
UL-SCH	Uplink Shared channel

Samsung Exhibit 1017, Page 7 of 121

4 Mapping to physical channels

4.1 Uplink

Table 4.1-1 specifies the mapping of the uplink transport channels to their corresponding physical channels. Table 4.1-2 specifies the mapping of the uplink control channel information to its corresponding physical channel.

Table 4.1-1

TrCH	Physical Channel
UL-SCH	PUSCH
RACH	PRACH

Table 4.1-2

Control information	Physical Channel
UCI	PUCCH, PUSCH

4.2 Downlink

Table 4.2-1 specifies the mapping of the downlink transport channels to their corresponding physical channels. Table 4.2-2 specifies the mapping of the downlink control channel information to its corresponding physical channel.

Table 4.2-1

TrCH	Physical Channel
DL-SCH	PDSCH
BCH	PBCH
PCH	PDSCH
MCH	PMCH

Table 4.2-2

Control information	Physical Channel
CFI	PCFICH
HI	PHICH
DCI	PDCCH, EPDCCH

4.3 Sidelink

Table 4.3-1 specifies the mapping of the sidelink transport channels to their corresponding physical channels. Table 4.3-2 specifies the mapping of the sidelink control information to its corresponding physical channel.

Samsung Exhibit 1017, Page 8 of 121

Table 4.3-1

TrCH	Physical Channel
SL-SCH	PSSCH
SL-BCH	PSBCH
SL-DCH	PSDCH

Table 4.3-2

Control information	Physical Channel
SCI	PSCCH

5 Channel coding, multiplexing and interleaving

Data and control streams from/to MAC layer are encoded /decoded to offer transport and control services over the radio transmission link. Channel coding scheme is a combination of error detection, error correcting, rate matching, interleaving and transport channel or control information mapping onto/splitting from physical channels.

5.1 Generic procedures

This section contains coding procedures which are used for more than one transport channel or control information type.

5.1.1 CRC calculation

Denote the input bits to the CRC computation by $a_0, a_1, a_2, a_3, ..., a_{A-1}$, and the parity bits by $p_0, p_1, p_2, p_3, ..., p_{L-1}$. A is the size of the input sequence and L is the number of parity bits. The parity bits are generated by one of the following cyclic generator polynomials:

- $g_{CRC24A}(D) = [D^{24} + D^{23} + D^{18} + D^{17} + D^{14} + D^{11} + D^{10} + D^7 + D^6 + D^5 + D^4 + D^3 + D + 1]$ and;
- $g_{CRC24B}(D) = [D^{24} + D^{23} + D^6 + D^5 + D + 1]$ for a CRC length $L = 24$ and;
- $g_{CRC16}(D) = [D^{16} + D^{12} + D^5 + 1]$ for a CRC length $L = 16$.
- $g_{CRC8}(D) = [D^8 + D^7 + D^4 + D^3 + D + 1]$ for a CRC length of $L = 8$.

The encoding is performed in a systematic form, which means that in GF(2), the polynomial:

$$a_0 D^{A+23} + a_1 D^{A+22} + ... + a_{A-1} D^{24} + p_0 D^{23} + p_1 D^{22} + ... + p_{22} D^1 + p_{23}$$

yields a remainder equal to 0 when divided by the corresponding length-24 CRC generator polynomial, $g_{CRC24A}(D)$ or $g_{CRC24B}(D)$, the polynomial:

$$a_0 D^{A+15} + a_1 D^{A+14} + ... + a_{A-1} D^{16} + p_0 D^{15} + p_1 D^{14} + ... + p_{14} D^1 + p_{15}$$

yields a remainder equal to 0 when divided by $g_{CRC16}(D)$, and the polynomial:

$$a_0 D^{A+7} + a_1 D^{A+6} + ... + a_{A-1} D^8 + p_0 D^7 + p_1 D^6 + ... + p_6 D^1 + p_7$$

yields a remainder equal to 0 when divided by $g_{CRC8}(D)$.

The bits after CRC attachment are denoted by $b_0, b_1, b_2, b_3, ..., b_{B-1}$, where $B = A + L$. The relation between a_k and b_k is:

$b_k = a_k$ for $k = 0, 1, 2, \ldots, A-1$

$b_k = p_{k-A}$ for $k = A, A+1, A+2, ..., A+L-1$.

Samsung Exhibit 1017, Page 9 of 121

5.1.2 Code block segmentation and code block CRC attachment

The input bit sequence to the code block segmentation is denoted by $b_0, b_1, b_2, b_3, ..., b_{B-1}$, where $B > 0$. If B is larger than the maximum code block size Z, segmentation of the input bit sequence is performed and an additional CRC sequence of $L = 24$ bits is attached to each code block. The maximum code block size is:

- $Z = 6144$.

If the number of filler bits F calculated below is not 0, filler bits are added to the beginning of the first block.

Note that if $B < 40$, filler bits are added to the beginning of the code block.

The filler bits shall be set to <*NULL*> at the input to the encoder.

Total number of code blocks C is determined by:

if $B \le Z$

$L = 0$

Number of code blocks: $C = 1$

$B' = B$

else

$L = 24$

Number of code blocks: $C = \lceil B/(Z-L) \rceil$.

$B' = B + C \cdot L$

end if

The bits output from code block segmentation, for $C \neq 0$, are denoted by $c_{r0}, c_{r1}, c_{r2}, c_{r3}, ..., c_{r(K_r-1)}$, where r is the code block number, and K_r is the number of bits for the code block number r.

Number of bits in each code block (applicable for $C \neq 0$ only):

First segmentation size: K_+ = minimum K in table 5.1.3-3 such that $C \cdot K \ge B'$

if $C = 1$

the number of code blocks with length K_+ is $C_+ = 1$, $K_- = 0$, $C_- = 0$

else if $C > 1$

Second segmentation size: K_- = maximum K in table 5.1.3-3 such that $K < K_+$

$\Delta_K = K_+ - K_-$

Number of segments of size K_-: $C_- = \left\lfloor \frac{C \cdot K_+ - B'}{\Delta_K} \right\rfloor$.

Number of segments of size K_+: $C_+ = C - C_-$.

end if

Number of filler bits: $F = C_+ \cdot K_+ + C_- \cdot K_- - B'$

for k = 0 to F-1 -- Insertion of filler bits

$c_{0k} =< NULL >$

end for

$k = F$

$s = 0$

for $r = 0$ to C-1

if $r < C_-$

$K_r = K_-$

else

$K_r = K_+$

end if

while $k < K_r - L$

$c_{rk} = b_s$

$k = k + 1$

$s = s + 1$

end while

if $C > 1$

The sequence $c_{r0}, c_{r1}, c_{r2}, c_{r3}, ..., c_{r(K_r - L - 1)}$ is used to calculate the CRC parity bits $p_{r0}, p_{r1}, p_{r2}, ..., p_{r(L-1)}$ according to section 5.1.1 with the generator polynomial $g_{CRC24B}(D)$. For CRC calculation it is assumed that filler bits, if present, have the value 0.

while $k < K_r$

$c_{rk} = p_{r(k+L-K_r)}$

$k = k + 1$

end while

end if

$k = 0$

end for

5.1.3 Channel coding

The bit sequence input for a given code block to channel coding is denoted by $c_0, c_1, c_2, c_3, ..., c_{K-1}$, where K is the number of bits to encode. After encoding the bits are denoted by $d_0^{(i)}, d_1^{(i)}, d_2^{(i)}, d_3^{(i)}, ..., d_{D-1}^{(i)}$, where D is the number of encoded bits per output stream and i indexes the encoder output stream. The relation between c_k and $d_k^{(i)}$ and between K and D is dependent on the channel coding scheme.

The following channel coding schemes can be applied to TrCHs:

- tail biting convolutional coding;
- turbo coding.

Usage of coding scheme and coding rate for the different types of TrCH is shown in table 5.1.3-1. Usage of coding scheme and coding rate for the different control information types is shown in table 5.1.3-2.

The values of D in connection with each coding scheme:

Samsung Exhibit 1017, Page 11 of 121

- tail biting convolutional coding with rate 1/3: $D = K$;
- turbo coding with rate 1/3: $D = K + 4$.

The range for the output stream index i is 0, 1 and 2 for both coding schemes.

Table 5.1.3-1: Usage of channel coding scheme and coding rate for TrCHs.

TrCH	Coding scheme	Coding rate
UL-SCH	Turbo coding	1/3
DL-SCH		
PCH		
MCH		
SL-SCH		
SL-DCH		
BCH	Tail biting convolutional coding	1/3
SL-BCH		

Table 5.1.3-2: Usage of channel coding scheme and coding rate for control information.

Control Information	Coding scheme	Coding rate
DCI	Tail biting convolutional coding	1/3
CFI	Block code	1/16
HI	Repetition code	1/3
UCI	Block code	variable
	Tail biting convolutional coding	1/3
SCI	Tail biting convolutional coding	1/3

5.1.3.1 Tail biting convolutional coding

A tail biting convolutional code with constraint length 7 and coding rate 1/3 is defined.

The configuration of the convolutional encoder is presented in figure 5.1.3-1.

The initial value of the shift register of the encoder shall be set to the values corresponding to the last 6 information bits in the input stream so that the initial and final states of the shift register are the same. Therefore, denoting the shift register of the encoder by $s_0, s_1, s_2, ..., s_5$, then the initial value of the shift register shall be set to

$$s_i = c_{(K-1-i)}$$

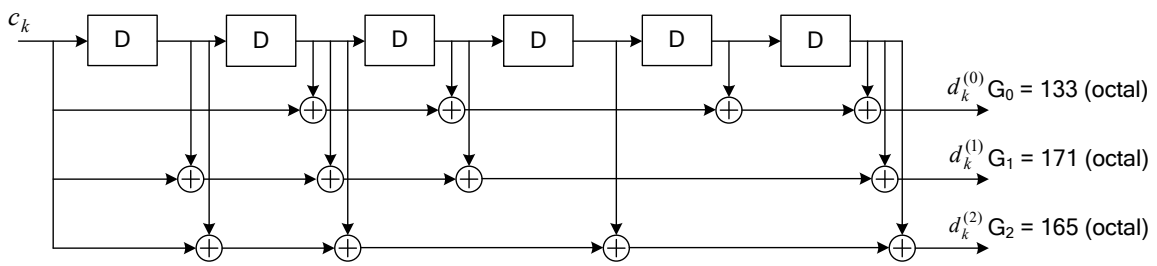

Figure 5.1.3-1: Rate 1/3 tail biting convolutional encoder.

Samsung Exhibit 1017, Page 12 of 121

The encoder output streams $d_k^{(0)}$, $d_k^{(1)}$ and $d_k^{(2)}$ correspond to the first, second and third parity streams, respectively as shown in Figure 5.1.3-1.

5.1.3.2 Turbo coding

5.1.3.2.1 Turbo encoder

The scheme of turbo encoder is a Parallel Concatenated Convolutional Code (PCCC) with two 8-state constituent encoders and one turbo code internal interleaver. The coding rate of turbo encoder is 1/3. The structure of turbo encoder is illustrated in figure 5.1.3-2.

The transfer function of the 8-state constituent code for the PCCC is:

$$G(D) = \left[1, \frac{g_1(D)}{g_0(D)}\right],$$

where

$$g_0(D) = 1 + D^2 + D^3,$$

$$g_1(D) = 1 + D + D^3.$$

The initial value of the shift registers of the 8-state constituent encoders shall be all zeros when starting to encode the input bits.

The output from the turbo encoder is

$$d_k^{(0)} = x_k$$

$$d_k^{(1)} = z_k$$

$$d_k^{(2)} = z'_k$$

for $k = 0,1,2,..., K-1$.

If the code block to be encoded is the 0-th code block and the number of filler bits is greater than zero, i.e., $F > 0$, then the encoder shall set c_k, = 0, k = 0,…,(F-1) at its input and shall set $d_k^{(0)} =< NULL >$, k = 0,…,(F-1) and $d_k^{(1)} =< NULL >$, k = 0,…,(F-1) at its output.

The bits input to the turbo encoder are denoted by $c_0, c_1, c_2, c_3, ..., c_{K-1}$, and the bits output from the first and second 8-state constituent encoders are denoted by $z_0, z_1, z_2, z_3, ..., z_{K-1}$ and $z'_0, z'_1, z'_2, z'_3, ..., z'_{K-1}$, respectively. The bits output from the turbo code internal interleaver are denoted by $c'_0, c'_1, ..., c'_{K-1}$, and these bits are to be the input to the second 8-state constituent encoder.

Samsung Exhibit 1017, Page 13 of 121

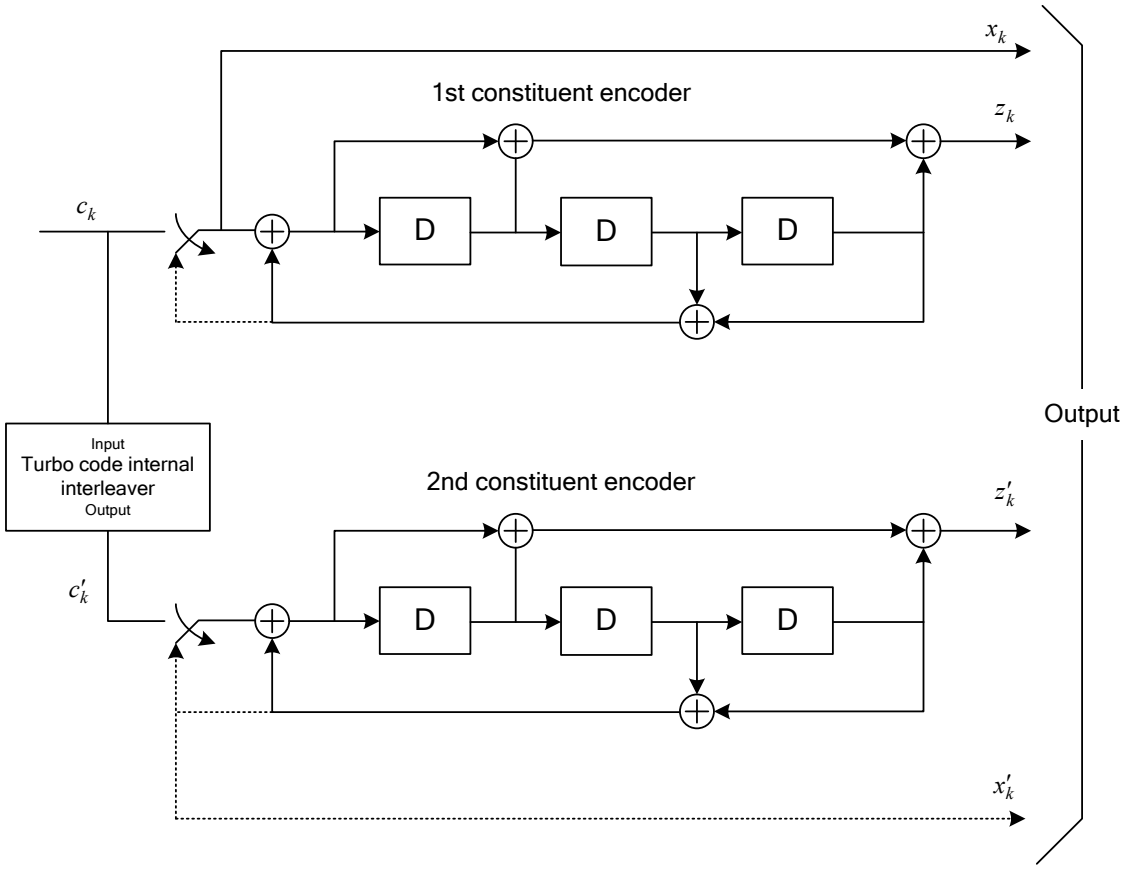

Figure 5.1.3-2: Structure of rate 1/3 turbo encoder (dotted lines apply for trellis termination only).

5.1.3.2.2 Trellis termination for turbo encoder

Trellis termination is performed by taking the tail bits from the shift register feedback after all information bits are encoded. Tail bits are padded after the encoding of information bits.

The first three tail bits shall be used to terminate the first constituent encoder (upper switch of figure 5.1.3-2 in lower position) while the second constituent encoder is disabled. The last three tail bits shall be used to terminate the second constituent encoder (lower switch of figure 5.1.3-2 in lower position) while the first constituent encoder is disabled.

The transmitted bits for trellis termination shall then be:

$$d_K^{(0)} = x_K,\ d_{K+1}^{(0)} = z_{K+1},\ d_{K+2}^{(0)} = x'_K,\ d_{K+3}^{(0)} = z'_{K+1}$$

$$d_K^{(1)} = z_K,\ d_{K+1}^{(1)} = x_{K+2},\ d_{K+2}^{(1)} = z'_K,\ d_{K+3}^{(1)} = x'_{K+2}$$

$$d_K^{(2)} = x_{K+1},\ d_{K+1}^{(2)} = z_{K+2},\ d_{K+2}^{(2)} = x'_{K+1},\ d_{K+3}^{(2)} = z'_{K+2}$$

5.1.3.2.3 Turbo code internal interleaver

The bits input to the turbo code internal interleaver are denoted by $c_0, c_1, ..., c_{K-1}$, where K is the number of input bits. The bits output from the turbo code internal interleaver are denoted by $c'_0, c'_1, ..., c'_{K-1}$.

The relationship between the input and output bits is as follows:

$c'_i = c_{\Pi(i)}$, i=0, 1,…, (K-1)

Samsung Exhibit 1017, Page 14 of 121

where the relationship between the output index i and the input index $\Pi(i)$ satisfies the following quadratic form:

$$\Pi(i) = \left(f_1 \cdot i + f_2 \cdot i^2\right) \bmod K$$

The parameters f_1 and f_2 depend on the block size K and are summarized in Table 5.1.3-3.

Table 5.1.3-3: Turbo code internal interleaver parameters.

i	*K*	f_1	f_2	*i*	*K*	f_1	f_2	*i*	*K*	f_1	f_2	*i*	*K*	f_1	f_2
1	40	3	10	48	416	25	52	95	1120	67	140	142	3200	111	240
2	48	7	12	49	424	51	106	96	1152	35	72	143	3264	443	204
3	56	19	42	50	432	47	72	97	1184	19	74	144	3328	51	104
4	64	7	16	51	440	91	110	98	1216	39	76	145	3392	51	212
5	72	7	18	52	448	29	168	99	1248	19	78	146	3456	451	192
6	80	11	20	53	456	29	114	100	1280	199	240	147	3520	257	220
7	88	5	22	54	464	247	58	101	1312	21	82	148	3584	57	336
8	96	11	24	55	472	29	118	102	1344	211	252	149	3648	313	228
9	104	7	26	56	480	89	180	103	1376	21	86	150	3712	271	232
10	112	41	84	57	488	91	122	104	1408	43	88	151	3776	179	236
11	120	103	90	58	496	157	62	105	1440	149	60	152	3840	331	120
12	128	15	32	59	504	55	84	106	1472	45	92	153	3904	363	244
13	136	9	34	60	512	31	64	107	1504	49	846	154	3968	375	248
14	144	17	108	61	528	17	66	108	1536	71	48	155	4032	127	168
15	152	9	38	62	544	35	68	109	1568	13	28	156	4096	31	64
16	160	21	120	63	560	227	420	110	1600	17	80	157	4160	33	130
17	168	101	84	64	576	65	96	111	1632	25	102	158	4224	43	264
18	176	21	44	65	592	19	74	112	1664	183	104	159	4288	33	134
19	184	57	46	66	608	37	76	113	1696	55	954	160	4352	477	408
20	192	23	48	67	624	41	234	114	1728	127	96	161	4416	35	138
21	200	13	50	68	640	39	80	115	1760	27	110	162	4480	233	280
22	208	27	52	69	656	185	82	116	1792	29	112	163	4544	357	142
23	216	11	36	70	672	43	252	117	1824	29	114	164	4608	337	480
24	224	27	56	71	688	21	86	118	1856	57	116	165	4672	37	146
25	232	85	58	72	704	155	44	119	1888	45	354	166	4736	71	444
26	240	29	60	73	720	79	120	120	1920	31	120	167	4800	71	120
27	248	33	62	74	736	139	92	121	1952	59	610	168	4864	37	152
28	256	15	32	75	752	23	94	122	1984	185	124	169	4928	39	462
29	264	17	198	76	768	217	48	123	2016	113	420	170	4992	127	234
30	272	33	68	77	784	25	98	124	2048	31	64	171	5056	39	158
31	280	103	210	78	800	17	80	125	2112	17	66	172	5120	39	80
32	288	19	36	79	816	127	102	126	2176	171	136	173	5184	31	96
33	296	19	74	80	832	25	52	127	2240	209	420	174	5248	113	902
34	304	37	76	81	848	239	106	128	2304	253	216	175	5312	41	166
35	312	19	78	82	864	17	48	129	2368	367	444	176	5376	251	336
36	320	21	120	83	880	137	110	130	2432	265	456	177	5440	43	170
37	328	21	82	84	896	215	112	131	2496	181	468	178	5504	21	86
38	336	115	84	85	912	29	114	132	2560	39	80	179	5568	43	174
39	344	193	86	86	928	15	58	133	2624	27	164	180	5632	45	176
40	352	21	44	87	944	147	118	134	2688	127	504	181	5696	45	178
41	360	133	90	88	960	29	60	135	2752	143	172	182	5760	161	120
42	368	81	46	89	976	59	122	136	2816	43	88	183	5824	89	182
43	376	45	94	90	992	65	124	137	2880	29	300	184	5888	323	184
44	384	23	48	91	1008	55	84	138	2944	45	92	185	5952	47	186
45	392	243	98	92	1024	31	64	139	3008	157	188	186	6016	23	94
46	400	151	40	93	1056	17	66	140	3072	47	96	187	6080	47	190
47	408	155	102	94	1088	171	204	141	3136	13	28	188	6144	263	480

Samsung Exhibit 1017, Page 15 of 121

5.1.4 Rate matching

5.1.4.1 Rate matching for turbo coded transport channels

The rate matching for turbo coded transport channels is defined per coded block and consists of interleaving the three information bit streams $d_k^{(0)}$, $d_k^{(1)}$ and $d_k^{(2)}$, followed by the collection of bits and the generation of a circular buffer as depicted in Figure 5.1.4-1. The output bits for each code block are transmitted as described in section 5.1.4.1.2.

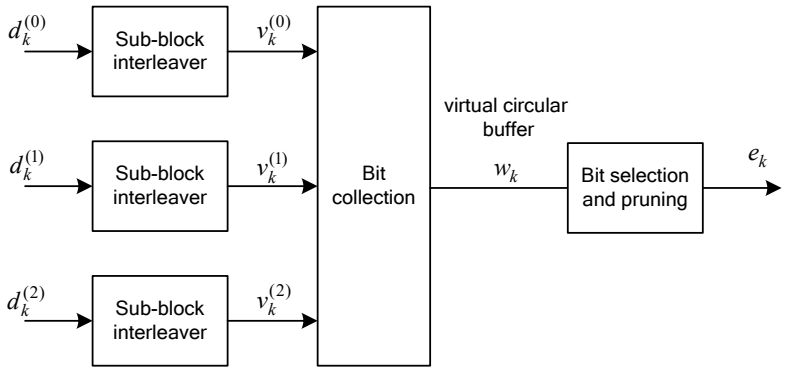

Figure 5.1.4-1. Rate matching for turbo coded transport channels.

The bit stream $d_k^{(0)}$ is interleaved according to the sub-block interleaver defined in section 5.1.4.1.1 with an output sequence defined as $v_0^{(0)}, v_1^{(0)}, v_2^{(0)}, ..., v_{K_\Pi-1}^{(0)}$ and where K_Π is defined in section 5.1.4.1.1.

The bit stream $d_k^{(1)}$ is interleaved according to the sub-block interleaver defined in section 5.1.4.1.1 with an output sequence defined as $v_0^{(1)}, v_1^{(1)}, v_2^{(1)}, ..., v_{K_\Pi-1}^{(1)}$.

The bit stream $d_k^{(2)}$ is interleaved according to the sub-block interleaver defined in section 5.1.4.1.1 with an output sequence defined as $v_0^{(2)}, v_1^{(2)}, v_2^{(2)}, ..., v_{K_\Pi-1}^{(2)}$.

The sequence of bits e_k for transmission is generated according to section 5.1.4.1.2.

5.1.4.1.1 Sub-block interleaver

The bits input to the block interleaver are denoted by $d_0^{(i)}, d_1^{(i)}, d_2^{(i)}, ..., d_{D-1}^{(i)}$, where D is the number of bits. The output bit sequence from the block interleaver is derived as follows:

(1) Assign $C_{subblock}^{TC} = 32$ to be the number of columns of the matrix. The columns of the matrix are numbered 0, 1, 2,…, $C_{subblock}^{TC} - 1$ from left to right.

(2) Determine the number of rows of the matrix $R_{subblock}^{TC}$, by finding minimum integer $R_{subblock}^{TC}$ such that:

$$D \le \left(R_{subblock}^{TC} \times C_{subblock}^{TC} \right)$$

The rows of rectangular matrix are numbered 0, 1, 2,…, $R_{subblock}^{TC} - 1$ from top to bottom.

Samsung Exhibit 1017, Page 16 of 121

(3) If $\left(R_{subblock}^{TC} \times C_{subblock}^{TC}\right) > D$, then $N_D = \left(R_{subblock}^{TC} \times C_{subblock}^{TC} - D\right)$ dummy bits are padded such that y_k = <*NULL*> for $k = 0, 1,\ldots, N_D - 1$. Then, $y_{N_D+k} = d_k^{(i)}$, $k = 0, 1,\ldots, D-1$, and the bit sequence y_k is written into the $\left(R_{subblock}^{TC} \times C_{subblock}^{TC}\right)$ matrix row by row starting with bit y_0 in column 0 of row 0:

$$\begin{bmatrix} y_0 & y_1 & y_2 & \cdots & y_{C_{subblock}^{TC}-1} \\ y_{C_{subblock}^{TC}} & y_{C_{subblock}^{TC}+1} & y_{C_{subblock}^{TC}+2} & \cdots & y_{2C_{subblock}^{TC}-1} \\ \vdots & \vdots & \vdots & \ddots & \vdots \\ y_{(R_{subblock}^{TC}-1)\times C_{subblock}^{TC}} & y_{(R_{subblock}^{TC}-1)\times C_{subblock}^{TC}+1} & y_{(R_{subblock}^{TC}-1)\times C_{subblock}^{TC}+2} & \cdots & y_{(R_{subblock}^{TC}\times C_{subblock}^{TC}-1)} \end{bmatrix}$$

For $d_k^{(0)}$ and $d_k^{(1)}$:

(4) Perform the inter-column permutation for the matrix based on the pattern $\langle P(j)\rangle_{j\in\{0,1,\ldots,C_{subblock}^{TC}-1\}}$ that is shown in table 5.1.4-1, where P(*j*) is the original column position of the *j*-th permuted column. After permutation of the columns, the inter-column permuted $\left(R_{subblock}^{TC} \times C_{subblock}^{TC}\right)$ matrix is equal to

$$\begin{bmatrix} y_{P(0)} & y_{P(1)} & y_{P(2)} & \cdots & y_{P(C_{subblock}^{TC}-1)} \\ y_{P(0)+C_{subblock}^{TC}} & y_{P(1)+C_{subblock}^{TC}} & y_{P(2)+C_{subblock}^{TC}} & \cdots & y_{P(C_{subblock}^{TC}-1)+C_{subblock}^{TC}} \\ \vdots & \vdots & \vdots & \ddots & \vdots \\ y_{P(0)+(R_{subblock}^{TC}-1)\times C_{subblock}^{TC}} & y_{P(1)+(R_{subblock}^{TC}-1)\times C_{subblock}^{TC}} & y_{P(2)+(R_{subblock}^{TC}-1)\times C_{subblock}^{TC}} & \cdots & y_{P(C_{subblock}^{TC}-1)+(R_{subblock}^{TC}-1)\times C_{subblock}^{TC}} \end{bmatrix}$$

(5) The output of the block interleaver is the bit sequence read out column by column from the inter-column permuted $\left(R_{subblock}^{TC} \times C_{subblock}^{TC}\right)$matrix. The bits after sub-block interleaving are denoted by $v_0^{(i)}, v_1^{(i)}, v_2^{(i)},\ldots, v_{K_\Pi-1}^{(i)}$, where $v_0^{(i)}$ corresponds to $y_{P(0)}$, $v_1^{(i)}$ to $y_{P(0)+C_{subblock}^{TC}}$ … and $K_\Pi = \left(R_{subblock}^{TC} \times C_{subblock}^{TC}\right)$.

For $d_k^{(2)}$:

(4) The output of the sub-block interleaver is denoted by $v_0^{(2)}, v_1^{(2)}, v_2^{(2)},\ldots, v_{K_\Pi-1}^{(2)}$, where $v_k^{(2)} = y_{\pi(k)}$ and where

$$\pi(k) = \left(P\left(\left\lfloor \frac{k}{R_{subblock}^{TC}} \right\rfloor\right) + C_{subblock}^{TC} \times \left(k \bmod R_{subblock}^{TC}\right) + 1\right) \bmod K_\Pi$$

The permutation function *P* is defined in Table 5.1.4-1.

Table 5.1.4-1 Inter-column permutation pattern for sub-block interleaver.

Number of columns $C_{subblock}^{TC}$	Inter-column permutation pattern $< P(0), P(1),\ldots, P(C_{subblock}^{TC}-1) >$
32	< 0, 16, 8, 24, 4, 20, 12, 28, 2, 18, 10, 26, 6, 22, 14, 30, 1, 17, 9, 25, 5, 21, 13, 29, 3, 19, 11, 27, 7, 23, 15, 31 >

5.1.4.1.2 Bit collection, selection and transmission

The circular buffer of length $K_w = 3K_\Pi$ for the *r*-th coded block is generated as follows:

$w_k = v_k^{(0)}$ for $k = 0,\ldots, K_\Pi - 1$

$w_{K_\Pi+2k} = v_k^{(1)}$ for $k = 0,\ldots, K_\Pi - 1$

Samsung Exhibit 1017, Page 17 of 121

$$w_{K_\Pi+2k+1} = v_k^{(2)} \quad \text{for } k = 0,\ldots,\ K_\Pi - 1$$

Denote the soft buffer size for the transport block by N_{IR} bits and the soft buffer size for the r-th code block by N_{cb} bits. The size N_{cb} is obtained as follows, where C is the number of code blocks computed in section 5.1.2:

- $N_{cb} = \min\left(\left\lfloor \frac{N_{IR}}{C} \right\rfloor, K_w\right)$ for DL-SCH and PCH transport channels

- $N_{cb} = K_w$ for UL-SCH, MCH, SL-SCH and SL-DCH transport channels

For UE category 0, for DL-SCH associated with SI-RNTI and RA-RNTI and PCH transport channel, N_{cb} is always equal to K_w.

where N_{IR} is equal to:

$$N_{IR} = \left\lfloor \frac{N_{soft}}{K_C \cdot K_{\text{MIMO}} \cdot \min\left(M_{\text{DL_HARQ}}, M_{\text{limit}}\right)} \right\rfloor$$

where:

If the UE signals *ue-CategoryDL-r12* indicating UE category 0, or if the UE signals *ue-CategoryDL-r12* indicating UE category 14 and is configured by higher layers with *altCQI-Table-r12* for the DL cell, N_{soft} is the total number of soft channel bits according to the UE category indicated by *ue-CategoryDL-r12*. Otherwise, if the UE signals *ue-Category-v11a0,* and is configured by higher layers with *altCQI-Table-r12* for the DL cell, N_{soft} is the total number of soft channel bits according to the UE category indicated by *ue-Category-v11a0.* Otherwise, if the UE signals *ue-Category-v1020*, and is configured with transmission mode 9 or transmission mode 10, or is configured with transmission mode 3 or transmission mode 4 and the higher layer parameter *maxLayersMIMO-r10* is configured to fourLayers, for the DL cell, N_{soft} is the total number of soft channel bits [4] according to the UE category indicated by *ue-Category-v1020* [6]. Otherwise, N_{soft} is the total number of soft channel bits [4] according to the UE category indicated by *ue-Category* (without suffix) [6].

If N_{soft} = 35982720 or 47431680,

K_C= 5,

elseif N_{soft} = 7308288 and the UE is configured by higher layers with *altCQI-Table-r12*,

if the UE is capable of supporting no more than a maximum of two spatial layers for the DL cell in the transmission mode configured for the UE, or if the configured maximum number of layers indicated by the *maxLayersMIMO-r10* field is no more than two,

K_C = 3

else

K_C = 3/2

end if.

elseif N_{soft} = 3654144 and the UE is capable of supporting no more than a maximum of two spatial layers for the DL cell, or if the configured maximum number of layers indicated by the *maxLayersMIMO-r10* field is no more than two,

K_C = 2

else

K_C = 1

End if.

Samsung Exhibit 1017, Page 18 of 121

K_{MIMO} is equal to 2 if the UE is configured to receive PDSCH transmissions based on transmission modes 3, 4, 8, 9 or 10 as defined in section 7.1 of [3], and is equal to 1 otherwise.

M_{DL_HARQ} is the maximum number of DL HARQ processes as defined in section 7 of [3].

M_{limit} is a constant equal to 8.

Denoting by E the rate matching output sequence length for the r-th coded block, and rv_{idx} the redundancy version number for this transmission (rv_{idx} = 0, 1, 2 or 3), the rate matching output bit sequence is e_k, $k = 0,1,..., E-1$.

Define by G the total number of bits available for the transmission of one transport block.

Set $G' = G/(N_L \cdot Q_m)$ where Q_m is equal to 2 for QPSK, 4 for 16QAM, 6 for 64QAM and 8 for 256QAM, and where

- For transmit diversity:
  - N_L is equal to 2,
- Otherwise:
  - N_L is equal to the number of layers a transport block is mapped onto

Set $\gamma = G' \bmod C$, where C is the number of code blocks computed in section 5.1.2.

if $r \le C - \gamma - 1$

set $E = N_L \cdot Q_m \cdot \lfloor G'/C \rfloor$

else

set $E = N_L \cdot Q_m \cdot \lceil G'/C \rceil$

end if

Set $k_0 = R_{subblock}^{TC} \cdot \left(2 \cdot \left\lceil \frac{N_{cb}}{8R_{subblock}^{TC}} \right\rceil \cdot rv_{idx} + 2 \right)$, where $R_{subblock}^{TC}$ is the number of rows defined in section 5.1.4.1.1.

Set $k = 0$ and $j = 0$

while { $k < E$ }

if $w_{(k_0+j) \bmod N_{cb}} \neq < NULL >$

$e_k = w_{(k_0+j) \bmod N_{cb}}$

$k = k + 1$

end if

$j = j + 1$

end while

5.1.4.2 Rate matching for convolutionally coded transport channels and control information

The rate matching for convolutionally coded transport channels and control information consists of interleaving the three bit streams, $d_k^{(0)}$, $d_k^{(1)}$ and $d_k^{(2)}$, followed by the collection of bits and the generation of a circular buffer as depicted in Figure 5.1.4-2. The output bits are transmitted as described in section 5.1.4.2.2.

Samsung Exhibit 1017, Page 19 of 121

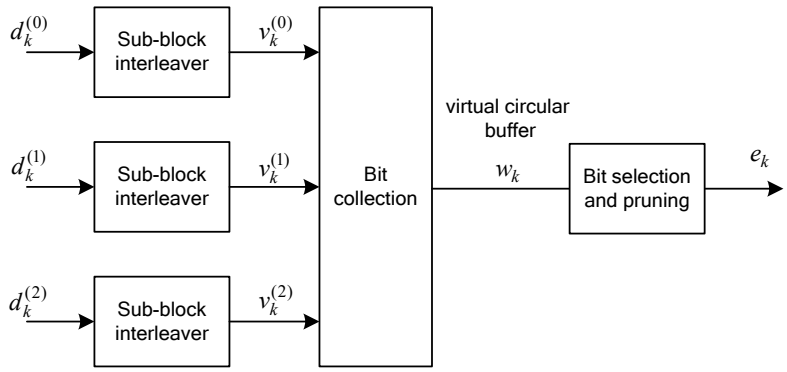

Figure 5.1.4-2. Rate matching for convolutionally coded transport channels and control information.

The bit stream $d_k^{(0)}$ is interleaved according to the sub-block interleaver defined in section 5.1.4.2.1 with an output sequence defined as $v_0^{(0)}, v_1^{(0)}, v_2^{(0)}, ..., v_{K_\Pi-1}^{(0)}$ and where K_Π is defined in section 5.1.4.2.1.

The bit stream $d_k^{(1)}$ is interleaved according to the sub-block interleaver defined in section 5.1.4.2.1 with an output sequence defined as $v_0^{(1)}, v_1^{(1)}, v_2^{(1)}, ..., v_{K_\Pi-1}^{(1)}$.

The bit stream $d_k^{(2)}$ is interleaved according to the sub-block interleaver defined in section 5.1.4.2.1 with an output sequence defined as $v_0^{(2)}, v_1^{(2)}, v_2^{(2)}, ..., v_{K_\Pi-1}^{(2)}$.

The sequence of bits e_k for transmission is generated according to section 5.1.4.2.2.

5.1.4.2.1 Sub-block interleaver

The bits input to the block interleaver are denoted by $d_0^{(i)}, d_1^{(i)}, d_2^{(i)}, ..., d_{D-1}^{(i)}$, where D is the number of bits. The output bit sequence from the block interleaver is derived as follows:

(1) Assign $C_{subblock}^{CC} = 32$ to be the number of columns of the matrix. The columns of the matrix are numbered 0, 1, 2,…, $C_{subblock}^{CC} - 1$ from left to right.

(2) Determine the number of rows of the matrix $R_{subblock}^{CC}$, by finding minimum integer $R_{subblock}^{CC}$ such that:

$$D \le \left(R_{subblock}^{CC} \times C_{subblock}^{CC}\right)$$

The rows of rectangular matrix are numbered 0, 1, 2,…, $R_{subblock}^{CC} - 1$ from top to bottom.

(3) If $\left(R_{subblock}^{CC} \times C_{subblock}^{CC}\right) > D$, then $N_D = \left(R_{subblock}^{CC} \times C_{subblock}^{CC} - D\right)$ dummy bits are padded such that y_k = <*NULL*> for k = 0, 1,…, N_D - 1. Then, $y_{N_D+k} = d_k^{(i)}$, k = 0, 1,…, D-1, and the bit sequence y_k is written into the $\left(R_{subblock}^{CC} \times C_{subblock}^{CC}\right)$ matrix row by row starting with bit y_0 in column 0 of row 0:

$$\begin{bmatrix} y_0 & y_1 & y_2 & \cdots & y_{C_{subblock}^{CC}-1} \\ y_{C_{subblock}^{CC}} & y_{C_{subblock}^{CC}+1} & y_{C_{subblock}^{CC}+2} & \cdots & y_{2C_{subblock}^{CC}-1} \\ \vdots & \vdots & \vdots & \ddots & \vdots \\ y_{(R_{subblock}^{CC}-1)\times C_{subblock}^{CC}} & y_{(R_{subblock}^{CC}-1)\times C_{subblock}^{CC}+1} & y_{(R_{subblock}^{CC}-1)\times C_{subblock}^{CC}+2} & \cdots & y_{(R_{subblock}^{CC}\times C_{subblock}^{CC}-1)} \end{bmatrix}$$

Samsung Exhibit 1017, Page 20 of 121

(4) Perform the inter-column permutation for the matrix based on the pattern $\langle P(j)\rangle_{j\in\{0,1,\ldots,C^{CC}_{subblock}-1\}}$ that is shown in table 5.1.4-2, where P(j) is the original column position of the j-th permuted column. After permutation of the columns, the inter-column permuted $\left(R^{CC}_{subblock}\times C^{CC}_{subblock}\right)$ matrix is equal to

$$\begin{bmatrix} y_{P(0)} & y_{P(1)} & y_{P(2)} & \cdots & y_{P(C^{CC}_{subblock}-1)} \\ y_{P(0)+C^{CC}_{subblock}} & y_{P(1)+C^{CC}_{subblock}} & y_{P(2)+C^{CC}_{subblock}} & \cdots & y_{P(C^{CC}_{subblock}-1)+C^{CC}_{subblock}} \\ \vdots & \vdots & \vdots & \ddots & \vdots \\ y_{P(0)+(R^{CC}_{subblock}-1)\times C^{CC}_{subblock}} & y_{P(1)+(R^{CC}_{subblock}-1)\times C^{CC}_{subblock}} & y_{P(2)+(R^{CC}_{subblock}-1)\times C^{CC}_{subblock}} & \cdots & y_{P(C^{CC}_{subblock}-1)+(R^{CC}_{subblock}-1)\times C^{CC}_{subblock}} \end{bmatrix}$$

(5) The output of the block interleaver is the bit sequence read out column by column from the inter-column permuted $\left(R^{CC}_{subblock}\times C^{CC}_{subblock}\right)$matrix. The bits after sub-block interleaving are denoted by $v_0^{(i)}, v_1^{(i)}, v_2^{(i)},\ldots, v_{K_\Pi-1}^{(i)}$, where $v_0^{(i)}$ corresponds to $y_{P(0)}$, $v_1^{(i)}$ to $y_{P(0)+C^{CC}_{subblock}}$ … and $K_\Pi = \left(R^{CC}_{subblock}\times C^{CC}_{subblock}\right)$

Table 5.1.4-2 Inter-column permutation pattern for sub-block interleaver.

Number of columns $C^{CC}_{subblock}$	Inter-column permutation pattern $< P(0), P(1),\ldots, P(C^{CC}_{subblock}-1) >$
32	< 1, 17, 9, 25, 5, 21, 13, 29, 3, 19, 11, 27, 7, 23, 15, 31, 0, 16, 8, 24, 4, 20, 12, 28, 2, 18, 10, 26, 6, 22, 14, 30 >

This block interleaver is also used in interleaving PDCCH modulation symbols. In that case, the input bit sequence consists of PDCCH symbol quadruplets [2].

5.1.4.2.2 Bit collection, selection and transmission

The circular buffer of length $K_w = 3K_\Pi$ is generated as follows:

$w_k = v_k^{(0)}$ for $k = 0,\ldots, K_\Pi - 1$

$w_{K_\Pi+k} = v_k^{(1)}$ for $k = 0,\ldots, K_\Pi - 1$

$w_{2K_\Pi+k} = v_k^{(2)}$ for $k = 0,\ldots, K_\Pi - 1$

Denoting by E the rate matching output sequence length, the rate matching output bit sequence is e_k, $k = 0,1,\ldots, E-1$.

Set $k = 0$ and $j = 0$

while { $k < E$ }

  if $w_{j \bmod K_w} \neq < NULL >$

    $e_k = w_{j \bmod K_w}$

    $k = k + 1$

  end if

  $j = j + 1$

end while

Samsung Exhibit 1017, Page 21 of 121

5.1.5 Code block concatenation

The input bit sequence for the code block concatenation block are the sequences e_{rk}, for $r = 0,..., C-1$ and $k = 0,..., E_r - 1$. The output bit sequence from the code block concatenation block is the sequence f_k for $k = 0,..., G-1$.

The code block concatenation consists of sequentially concatenating the rate matching outputs for the different code blocks. Therefore,

Set $k = 0$ and $r = 0$

while $r < C$

  Set $j = 0$

  while $j < E_r$

    $f_k = e_{rj}$

    $k = k + 1$

    $j = j + 1$

  end while

  $r = r + 1$

end while

5.2 Uplink transport channels and control information

If the UE is configured with a Master Cell Group (MCG) and Secondary Cell Group (SCG) [6], the procedures described in this clause are applied to the MCG and SCG, respectively. When the procedures are applied to a SCG, the term primary cell refers to the primary SCell (PSCell) of the SCG.

If the UE is configured with a PUCCH SCell [6], the procedures described in this clause are applied to the group of DL cells associated with the primary cell and the group of DL cells associated with the PUCCH SCell, respectively. When the procedures are applied to the group of DL cells associated with the PUCCH SCell, the term primary cell refers to the PUCCH SCell.

If the UE is configured with a LAA SCell, the procedures described in this clause are applied assuming the LAA SCell is an FDD SCell.

5.2.1 Random access channel

The sequence index for the random access channel is received from higher layers and is processed according to [2].

5.2.2 Uplink shared channel

Figure 5.2.2-1 shows the processing structure for the UL-SCH transport channel on one UL cell. Data arrives to the coding unit in the form of a maximum of two transport blocks every transmission time interval (TTI) per UL cell. The following coding steps can be identified for each transport block of an UL cell:

- Add CRC to the transport block
- Code block segmentation and code block CRC attachment
- Channel coding of data and control information
- Rate matching

Samsung Exhibit 1017, Page 22 of 121

– Code block concatenation

– Multiplexing of data and control information

– Channel interleaver

The coding steps for one UL-SCH transport block are shown in the figure below. The same general processing applies for each UL-SCH transport block on each UL cell with restrictions as specified in [3].

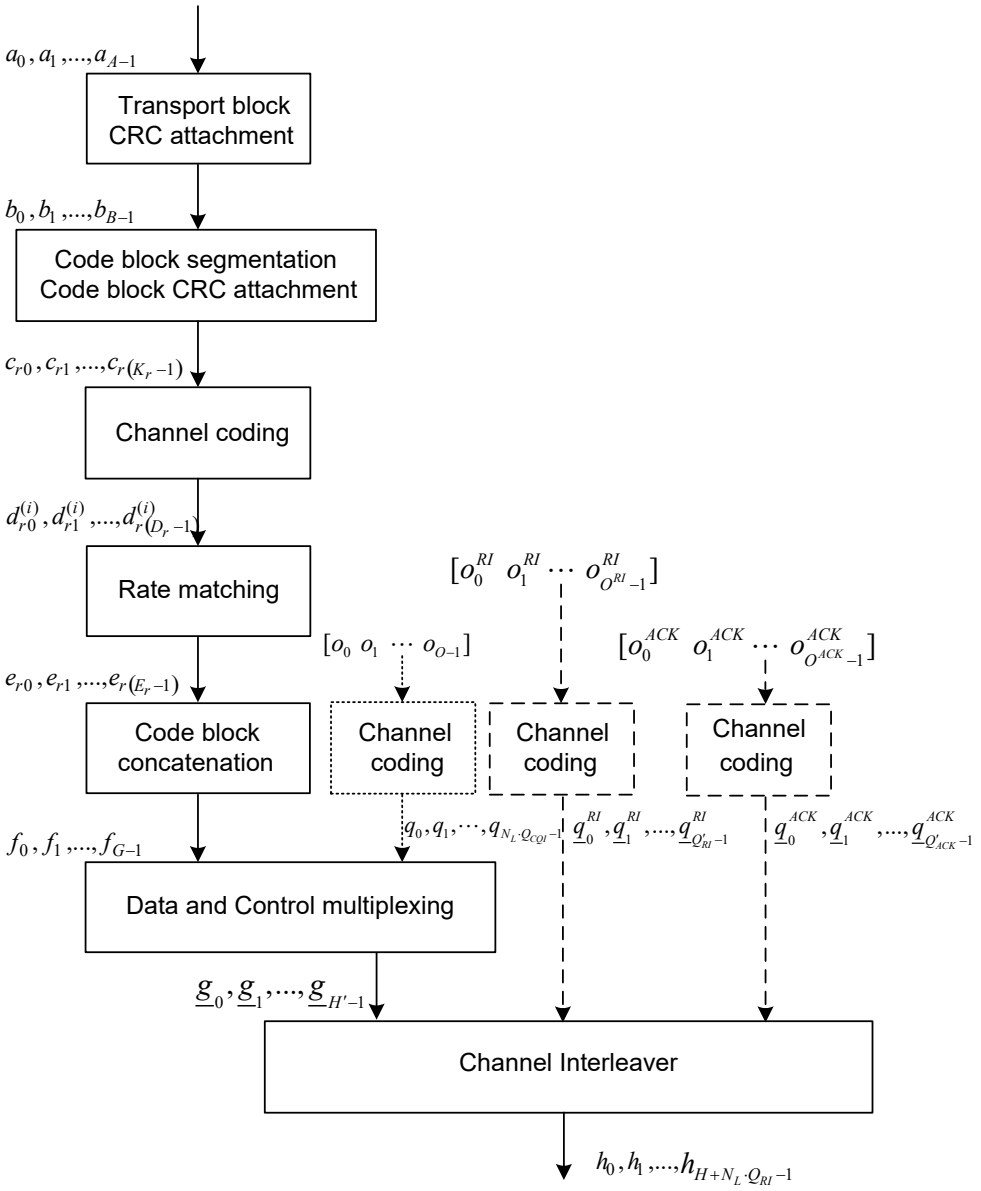

Figure 5.2.2-1: Transport block processing for UL-SCH.

5.2.2.1 Transport block CRC attachment

Error detection is provided on each UL-SCH transport block through a Cyclic Redundancy Check (CRC).

The entire transport block is used to calculate the CRC parity bits. Denote the bits in a transport block delivered to layer 1 by $a_0, a_1, a_2, a_3, ..., a_{A-1}$, and the parity bits by $p_0, p_1, p_2, p_3, ..., p_{L-1}$. A is the size of the transport block and L is the number of parity bits. The lowest order information bit a_0 is mapped to the most significant bit of the transport block as defined in section 6.1.1 of [5].

Samsung Exhibit 1017, Page 23 of 121

The parity bits are computed and attached to the UL-SCH transport block according to section 5.1.1 setting L to 24 bits and using the generator polynomial $g_{CRC24A}(D)$.

5.2.2.2 Code block segmentation and code block CRC attachment

The bits input to the code block segmentation are denoted by $b_0, b_1, b_2, b_3, ..., b_{B-1}$ where B is the number of bits in the transport block (including CRC).

Code block segmentation and code block CRC attachment are performed according to section 5.1.2.

The bits after code block segmentation are denoted by $c_{r0}, c_{r1}, c_{r2}, c_{r3}, ..., c_{r(K_r-1)}$, where r is the code block number and K_r is the number of bits for code block number r.

5.2.2.3 Channel coding of UL-SCH

Code blocks are delivered to the channel coding block. The bits in a code block are denoted by $c_{r0}, c_{r1}, c_{r2}, c_{r3}, ..., c_{r(K_r-1)}$, where r is the code block number, and K_r is the number of bits in code block number r. The total number of code blocks is denoted by C and each code block is individually turbo encoded according to section 5.1.3.2.

After encoding the bits are denoted by $d_{r0}^{(i)}, d_{r1}^{(i)}, d_{r2}^{(i)}, d_{r3}^{(i)}, ..., d_{r(D_r-1)}^{(i)}$, with $i = 0,1,$ and 2 and where D_r is the number of bits on the i-th coded stream for code block number r, i.e. $D_r = K_r + 4$.

5.2.2.4 Rate matching

Turbo coded blocks are delivered to the rate matching block. They are denoted by $d_{r0}^{(i)}, d_{r1}^{(i)}, d_{r2}^{(i)}, d_{r3}^{(i)}, ..., d_{r(D_r-1)}^{(i)}$, with $i = 0,1,$ and 2, and where r is the code block number, i is the coded stream index, and D_r is the number of bits in each coded stream of code block number r. The total number of code blocks is denoted by C and each coded block is individually rate matched according to section 5.1.4.1.

After rate matching, the bits are denoted by $e_{r0}, e_{r1}, e_{r2}, e_{r3}, ..., e_{r(E_r-1)}$, where r is the coded block number, and where E_r is the number of rate matched bits for code block number r.

5.2.2.5 Code block concatenation

The bits input to the code block concatenation block are denoted by $e_{r0}, e_{r1}, e_{r2}, e_{r3}, ..., e_{r(E_r-1)}$ for $r = 0, ..., C-1$ and where E_r is the number of rate matched bits for the r-th code block.

Code block concatenation is performed according to section 5.1.5.

The bits after code block concatenation are denoted by $f_0, f_1, f_2, f_3, ..., f_{G-1}$, where G is the total number of coded bits for transmission of the given transport block over N_L transmission layers excluding the bits used for control transmission, when control information is multiplexed with the UL-SCH transmission.

5.2.2.6 Channel coding of control information

Control data arrives at the coding unit in the form of channel quality information (CQI and/or PMI), HARQ-ACK and rank indication, and CSI-RS resource indication (CRI). Different coding rates for the control information are achieved by allocating different number of coded symbols for its transmission. When control data are transmitted in the PUSCH, the channel coding for HARQ-ACK, rank indication, CRI and channel quality information $o_0, o_1, o_2, ..., o_{O-1}$ is done independently.

For the cases with TDD primary cell, the number of HARQ-ACK bits is determined as described in section 7.3 of [3].

Samsung Exhibit 1017, Page 24 of 121

When the UE transmits HARQ-ACK bits, rank indicator bits or CRI bits, it shall determine the number of coded modulation symbols per layer Q' for HARQ-ACK, rank indicator or CRI bits as follows.

For the case when only one transport block is transmitted in the PUSCH conveying the HARQ-ACK bits, rank indicator bits or CRI bits:

$$Q' = \min\left(\left\lceil \frac{O \cdot M_{sc}^{PUSCH-initial} \cdot N_{symb}^{PUSCH-initial} \cdot \beta_{offset}^{PUSCH}}{\sum_{r=0}^{C-1} K_r} \right\rceil, 4 \cdot M_{sc}^{PUSCH} \right)$$

where

- O is the number of HARQ-ACK bits, rank indicator bits or CRI bits, and
- $M_{\text{sc}}^{\text{PUSCH}}$ is the scheduled bandwidth for PUSCH transmission in the current sub-frame for the transport block, expressed as a number of subcarriers in [2], and
- $N_{\text{symb}}^{\text{PUSCH-initial}}$ is the number of SC-FDMA symbols per subframe for initial PUSCH transmission for the same transport block, respectively, given by $N_{\text{symb}}^{PUSCH\text{-}initial} = \left(2 \cdot \left(N_{\text{symb}}^{\text{UL}} - 1\right) - N_{\text{SRS}}\right)$, where
  - N_{SRS} is equal to 1
    - if UE configured with one UL cell is configured to send PUSCH and SRS in the same subframe for initial transmission, or
    - if UE transmits PUSCH and SRS in the same subframe in the same serving cell for initial transmission, or
    - if the PUSCH resource allocation for initial transmission even partially overlaps with the cell-specific SRS subframe and bandwidth configuration defined in section 5.5.3 of [2], or
    - if the subframe for initial transmission in the same serving cell is a UE-specific type-1 SRS subframe as defined in Section 8.2 of [3], or
    - if the subframe for initial transmission in the same serving cell is a UE-specific type-0 SRS subframe as defined in section 8.2 of [3] and the UE is configured with multiple TAGs.
  - Otherwise N_{SRS} is equal to 0.
- $M_{sc}^{PUSCH-initial}$, C, and K_r are obtained from the initial PDCCH or EPDCCH for the same transport block. If there is no initial PDCCH or EPDCCH with DCI format 0 for the same transport block, $M_{sc}^{PUSCH-initial}$, C, and K_r shall be determined from:
  - the most recent semi-persistent scheduling assignment PDCCH or EPDCCH, when the initial PUSCH for the same transport block is semi-persistently scheduled, or,
  - the random access response grant for the same transport block, when the PUSCH is initiated by the random access response grant.

For the case when two transport blocks are transmitted in the PUSCH conveying the HARQ-ACK bits, rank indicator bits or CRI bits:

$$Q' = \max\left[\min\left(Q'_{temp}, 4 \cdot M_{sc}^{PUSCH}\right), Q'_{\min}\right] \text{ with}$$

Samsung Exhibit 1017, Page 25 of 121

$$Q'_{temp}=\left\lceil \frac{O\cdot M_{sc}^{PUSCH-initial(1)}\cdot N_{symb}^{PUSCH-initial(1)}\cdot M_{sc}^{PUSCH-initial(2)}\cdot N_{symb}^{PUSCH-initial(2)}\cdot \beta_{offset}^{PUSCH}}{\sum_{r=0}^{C^{(1)}-1}K_r^{(1)}\cdot M_{sc}^{PUSCH-initial(2)}\cdot N_{symb}^{PUSCH-initial(2)}+\sum_{r=0}^{C^{(2)}-1}K_r^{(2)}\cdot M_{sc}^{PUSCH-initial(1)}\cdot N_{symb}^{PUSCH-initial(1)}} \right\rceil$$

where

- O is the number of HARQ-ACK bits, rank indicator bits or CRI bits, and
- $Q'_{\min}=O$ if $O\le 2$, $Q'_{\min}=\lceil 2O/Q'_m\rceil$ if $3\le O\le 11$ with $Q'_m=\min(Q_m^1,Q_m^2)$ where $Q_m^x, x=\{1,2\}$ is the modulation order of transport block "x", and $Q'_{\min}=\lceil 2O_1/Q'_m\rceil+\lceil 2O_2/Q'_m\rceil$ if $O>11$ with $O_1=\lceil O/2\rceil$ and $O_2=O-\lceil O/2\rceil$.
- $M_{\mathrm{sc}}^{PUSCH\text{-}initial(x)}, x=\{1,2\}$ are the scheduled bandwidths for PUSCH transmission in the initial sub-frame for the first and second transport block, respectively, expressed as a number of subcarriers in [2], and
- $N_{\mathrm{symb}}^{PUSCH\text{-}initial(\mathrm{x})}, x=\{1,2\}$ are the number of SC-FDMA symbols per subframe for initial PUSCH transmission for the first and second transport block given by $N_{\mathrm{symb}}^{PUSCH\text{-}initial(x)}=\left(2\cdot\left(N_{\mathrm{symb}}^{\mathrm{UL}}-1\right)-N_{\mathrm{SRS}}^{(x)}\right), x=\{1,2\}$, where
  - $N_{SRS}^{(x)}, x=\{1,2\}$ is equal to 1
    - if UE configured with one UL cell is configured to send PUSCH and SRS in the same subframe for initial transmission, or
    - if UE transmits PUSCH and SRS in the same subframe in the same serving cell for initial transmission of transport block "x", or
    - if the PUSCH resource allocation for initial transmission of transport bock "x" even partially overlaps with the cell-specific SRS subframe and bandwidth configuration defined in section 5.5.3 of [2] , or
    - if the subframe for initial transmission of transport block "x" in the same serving cell is a UE-specific type-1 SRS subframe as defined in Section 8.2 of [3], or
    - if the subframe for initial transmission of transport block "x" in the same serving cell is a UE-specific type-0 SRS subframe as defined in section 8.2 of [3] and the UE is configured with multiple TAGs.
  - Otherwise $N_{SRS}^{(x)}, x=\{1,2\}$ is equal to 0.
- $M_{sc}^{PUSCH-initial(x)}, x=\{1,2\}$, $C^{(x)}, x=\{1,2\}$, and $K_r^{(x)}, x=\{1,2\}$ are obtained from the initial PDCCH or EPDCCH for the corresponding transport block.

For HARQ-ACK, $Q_{ACK}=Q_m\cdot Q'$ and $\beta_{offset}^{PUSCH}=\beta_{offset}^{HARQ-ACK}$, where Q_m is the modulation order of a given transport block. For UEs configured with no more than five DL cells, $\beta_{offset}^{HARQ-ACK}$ shall be determined according to [3] depending on the number of transmission codewords for the corresponding PUSCH. For UEs configured with more than five DL cells, $\beta_{offset}^{HARQ-ACK}$ shall be determined according to [3] depending on the number of transmission codewords for the corresponding PUSCH and and the number of HARQ-ACK feedback bits.

For rank indication or CRI, $Q_{RI}=Q_m\cdot Q'$, $Q_{CRI}=Q_m\cdot Q'$ and $\beta_{offset}^{PUSCH}=\beta_{offset}^{RI}$, where Q_m is the modulation order of a given transport block, and β_{offset}^{RI} shall be determined according to [3] depending on the number of transmission codewords for the corresponding PUSCH, and on the uplink power control subframe set for the corresponding PUSCH when two uplink power control subframe sets are configured by higher layers for the cell.

For HARQ-ACK

Samsung Exhibit 1017, Page 26 of 121

Each positive acknowledgement (ACK) is encoded as a binary '1' and each negative acknowledgement (NACK) is encoded as a binary '0'

If HARQ-ACK feedback consists of 1-bit of information, i.e., $[o_0^{ACK}]$, it is first encoded according to Table 5.2.2.6-1.

If HARQ-ACK feedback consists of 2-bits of information, i.e., $[o_0^{ACK}\ o_1^{ACK}]$ with o_0^{ACK} corresponding to HARQ-ACK bit for codeword 0 and o_1^{ACK} corresponding to that for codeword 1, or if HARQ-ACK feedback consists of 2-bits of information as a result of the aggregation of HARQ-ACK bits corresponding to two DL cells with which the UE is configured by higher layers, or if HARQ-ACK feedback consists of 2-bits of information corresponding to two subframes for TDD, it is first encoded according to Table 5.2.2.6-2 where $o_2^{ACK} = (o_0^{ACK} + o_1^{ACK}) \bmod 2$.

Table 5.2.2.6-1: Encoding of 1-bit HARQ-ACK.

Q_m	Encoded HARQ-ACK
2	$[o_0^{ACK}\ \mathrm{y}]$
4	$[o_0^{ACK}\ \mathrm{y\ x\ x}]$
6	$[o_0^{ACK}\ \mathrm{y\ x\ x\ x\ x}]$

Table 5.2.2.6-2: Encoding of 2-bit HARQ-ACK.

Q_m	Encoded HARQ-ACK
2	$[o_0^{ACK}\ o_1^{ACK}\ o_2^{ACK}\ o_0^{ACK}\ o_1^{ACK}\ o_2^{ACK}]$
4	$[o_0^{ACK}\ o_1^{ACK}\ \mathrm{x\ x}\ o_2^{ACK}\ o_0^{ACK}\ \mathrm{x\ x}\ o_1^{ACK}\ o_2^{ACK}\ \mathrm{x\ x}]$
6	$[o_0^{ACK}\ o_1^{ACK}\ \mathrm{x\ x\ x\ x}\ o_2^{ACK}\ o_0^{ACK}\ \mathrm{x\ x\ x\ x}\ o_1^{ACK}\ o_2^{ACK}\ \mathrm{x\ x\ x\ x}]$

If HARQ-ACK feedback consists of $3 \le O^{ACK} \le 11$ bits of information as a result of the aggregation of HARQ-ACK bits corresponding to one or more DL cells with which the UE is configured by higher layers, i.e., $o_0^{ACK}\ o_1^{ACK},...,o_{O^{ACK}-1}^{ACK}$, then a coded bit sequence $\tilde{q}_0^{ACK}\ \tilde{q}_1^{ACK},...,\tilde{q}_{31}^{ACK}$ is obtained by using the bit sequence $o_0^{ACK}\ o_1^{ACK},...,o_{O^{ACK}-1}^{ACK}$ as the input to the channel coding block described in section 5.2.2.6.4. In turn, the bit sequence $q_0^{ACK}, q_1^{ACK}, q_2^{ACK},..., q_{Q_{ACK}-1}^{ACK}$ is obtained by the circular repetition of the bit sequence $\tilde{q}_0^{ACK}\ \tilde{q}_1^{ACK},...,\tilde{q}_{31}^{ACK}$ so that the total bit sequence length is equal to Q_{ACK}.

If HARQ-ACK feedback consists of $11 < O^{ACK} \le 22$ bits of information as a result of the aggregation of HARQ-ACK bits corresponding to one or more DL cells with which the UE is configured by higher layers, i.e., $o_0^{ACK}\ o_1^{ACK},...,o_{O^{ACK}-1}^{ACK}$, then the coded bit sequence $q_0^{ACK}, q_1^{ACK}, q_2^{ACK},..., q_{Q_{ACK}-1}^{ACK}$ is obtained by using the bit sequence $o_0^{ACK}\ o_1^{ACK},...,o_{O^{ACK}-1}^{ACK}$ as the input to the channel coding block described in section 5.2.2.6.5.

If HARQ-ACK feedback consists of $O^{ACK} > 22$ bits of information as a result of the aggregation of HARQ-ACK bits corresponding to one or more DL cells with which the UE is configured by higher layers, the coded bit sequence is denoted by $q_0^{ACK}, q_1^{ACK}, q_2^{ACK},..., q_{Q_{ACK}-1}^{ACK}$. The CRC attachment, channel coding and rate matching of the HARQ-ACK bits are performed according to sections 5.1.1 setting L to 8 bits, 5.1.3.1 and 5.1.4.2, respectively. The input bit sequence to the CRC attachment operation is $o_0^{ACK}\ o_1^{ACK},...,o_{O^{ACK}-1}^{ACK}$. The output bit sequence of the CRC attachment operation is the input bit sequence to the channel coding operation. The output bit sequence of the channel coding operation is the input bit sequence to the rate matching operation.

The "x" and "y" in Table 5.2.2.6-1 and 5.2.2.6-2 are placeholders for [2] to scramble the HARQ-ACK bits in a way that maximizes the Euclidean distance of the modulation symbols carrying HARQ-ACK information.

Samsung Exhibit 1017, Page 27 of 121

For FDD or TDD HARQ-ACK multiplexing or the aggregation of more than one DL cell including at least one cell using FDD and at least one cell using TDD when HARQ-ACK consists of one or two bits of information, the bit sequence $q_0^{ACK}, q_1^{ACK}, q_2^{ACK}, ..., q_{Q_{ACK}-1}^{ACK}$ is obtained by concatenation of multiple encoded HARQ-ACK blocks where Q_{ACK} is the total number of coded bits for all the encoded HARQ-ACK blocks. The last concatenation of the encoded HARQ-ACK block may be partial so that the total bit sequence length is equal to Q_{ACK} .

For UEs configured by higher layers with *codebooksizeDetermination-r13 = 0*, the bit sequence $\tilde{o}_0^{ACK}\ \tilde{o}_1^{ACK}, ..., \tilde{o}_{O^{ACK}-1}^{ACK}$ is determined according to the Downlink Assignment Index (DAI) as in Table 5.3.3.1.1-2 and as defined in [3]. Otherwise, the bit sequence $\tilde{o}_0^{ACK}\ \tilde{o}_1^{ACK}, ..., \tilde{o}_{O^{ACK}-1}^{ACK}$ is determined as below.

For FDD when HARQ ACK consists of 2 or more bits of information as a result of the aggregation of more than one DL cell, the bit sequence $\tilde{o}_0^{ACK}\ \tilde{o}_1^{ACK}, ..., \tilde{o}_{O^{ACK}-1}^{ACK}$ is the result of the concatenation of HARQ-ACK bits for the multiple DL cells according to the following pseudo-code:

Set $c = 0$ – cell index: lower indices correspond to lower RRC indices of corresponding cell

Set $j = 0$ – HARQ-ACK bit index

Set N_{cells}^{DL} to the number of cells configured by higher layers for the UE

while $c < N_{cells}^{DL}$

if transmission mode configured in cell $c \in \{1,2,5,6,7\}$ – 1 bit HARQ-ACK feedback for this cell

$\tilde{o}_j^{ACK}$ = HARQ-ACK bit of this cell

$j = j + 1$

else

if the UE is not configured with spatial bundling on PUSCH by higher layers $\tilde{o}_j^{ACK}$ = HARQ-ACK bit corresponding to the first codeword of this cell

$j = j + 1$

$\tilde{o}_j^{ACK}$ = HARQ-ACK bit corresponding to the second codeword of this cell

$j = j + 1$

else

$\tilde{o}_j^{ACK}$ = binary AND operation of the HARQ-ACK bits corresponding to the first and second codewords of this cell

$j = j + 1$

end if

end if

$c = c + 1$

end while

For the aggregation of more than one DL cell including a primary cell using FDD and at least one secondary cell using TDD, the bit sequence $\tilde{o}_0^{ACK}\ \tilde{o}_1^{ACK}, ..., \tilde{o}_{O^{ACK}-1}^{ACK}$ is the result of the concatenation of HARQ-ACK bits for one or multiple DL cells. Define N_{cells}^{DL} as the number of cells configured by higher layers for the UE and B_c^{DL} as the number

Samsung Exhibit 1017, Page 28 of 121

of subframes for which the UE needs to feed back HARQ-ACK bits in UL subframe n for the *c*-th serving cell. For a cell using TDD, the subframes are determined by the DL-reference UL/DL configuration if the UE is configured with higher layer parameter *eimta-HARQ-ReferenceConfig*, and determined by the UL/DL configuration otherwise. For a cell using TDD, $B_c^{DL} = 1$ if subframe n-4 in the cell is a DL subframe or a special subframe with special subframe configurations 1/2/3/4/6/7/8/9 and normal downlink CP or a special subframe with special subframe configurations 1/2/3/5/6/7 and extended downlink CP, and $B_c^{DL} = 0$ otherwise. For a cell using FDD, $B_c^{DL} = 1$.

The bit sequence $\tilde{o}_0^{ACK}\ \tilde{o}_1^{ACK},\ldots,\tilde{o}_{O^{ACK}-1}^{ACK}$ is performed according to the following pseudo-code:

Set $c = 0$ – cell index: lower indices correspond to lower RRC indices of corresponding cell

Set $j = 0$ – HARQ-ACK bit index

while $c < N_{cells}^{DL}$

if $B_c^{DL} = 1$

if transmission mode configured in cell $c \in \{1,2,5,6,7\}$ – 1 bit HARQ-ACK feedback for this cell

$\tilde{o}_j^{ACK}$ = HARQ-ACK bit of this cell

$j = j + 1$

else

if the UE is not configured with spatial bundling on PUSCH by higher layers $\tilde{o}_j^{ACK}$ = HARQ-ACK bit corresponding to the first codeword of this cell

$j = j + 1$

$\tilde{o}_j^{ACK}$ = HARQ-ACK bit corresponding to the second codeword of this cell

$j = j + 1$

else

$\tilde{o}_j^{ACK}$ = binary AND operation of the HARQ-ACK bits corresponding to the first and second codewords of this cell

$j = j + 1$

end if

end if

end if

$c = c + 1$

end while

For the cases with TDD primary cell when HARQ-ACK is for the aggregation of one or more DL cells and the UE is configured with PUCCH format 3, PUCCH format 4 or PUCCH format 5 [3], the bit sequence $\tilde{o}_0^{ACK}\ \tilde{o}_1^{ACK},\ldots,\tilde{o}_{O^{ACK}-1}^{ACK}$ is the result of the concatenation of HARQ-ACK bits for the one or more DL cells configured by higher layers and the multiple subframes as defined in [3].

Define N_{cells}^{DL} as the number of cells configured by higher layers for the UE and B_c^{DL} as the number of subframes for which the UE needs to feed back HARQ-ACK bits as defined in Section 7.3 of [3].

Samsung Exhibit 1017, Page 29 of 121

The number of HARQ-ACK bits for the UE to convey if it is configured with PUCCH format 3, PUCCH format 4 or PUCCH format 5 is computed as follows:

Set $k = 0$ – counter of HARQ-ACK bits

Set c=0 – cell index: lower indices correspond to lower RRC indices of corresponding cell

while c < N_{cells}^{DL}

set $l = 0$;

while $l <$ B_c^{DL}

if transmission mode configured in cell $c \in \{1,2,5,6,7\}$ -- 1 bit HARQ-ACK feedback for this cell

$k = k + 1$

else

$k = k + 2$

end if

$l = l+1$

end while

$c = c + 1$

end while

When PUCCH format 3 is configured, if $k \leq 20$ when TDD is used in all the configured serving cell(s) of the UE, or if $k \leq 21$ when FDD is used in at least one of the configured serving cells with TDD primary cell; or when PUCCH format 4 or PUCCH format 5 is configured and when the UE is not configured with spatial bundling on PUSCH by higher layers, the multiplexing of HARQ-ACK bits is performed according to the following pseudo-code:

Set $c = 0$ – cell index: lower indices correspond to lower RRC indices of corresponding cell

Set $j = 0$ – HARQ-ACK bit index

while c < N_{cells}^{DL}

set $l = 0$;

while $l <$ B_c^{DL}

if transmission mode configured in cell $c \in \{1,2,5,6,7\}$ -- 1 bit HARQ-ACK feedback for this cell

$\tilde{o}_j^{ACK} = o_{c,l}^{ACK}$ HARQ-ACK bit of this cell as defined in Section 7.3 of [3]

$j = j + 1$

else

$[\tilde{o}_j^{ACK}, \tilde{o}_{j+1}^{ACK}] = [o_{c,2l}^{ACK}, o_{c,2l+1}^{ACK}]$ HARQ-ACK bits of this cell as defined in Section 7.3 of [3]

$j = j + 2$

end if

$l = l+1$

end while

Samsung Exhibit 1017, Page 30 of 121

$c = c + 1$

end while

When PUCCH format 3 is configured, if $k > 20$ when TDD is used in all the configured serving cell(s) of the UE, or if $k > 21$ when FDD is used in at least one of the configured serving cells with TDD primary cell, spatial bundling is applied to all subframes in all cells; or when PUCCH format 4 or PUCCH format 5 is configured and when the UE is configured with spatial bundling on PUSCH by higher layers, the multiplexing of HARQ-ACK bits is performed according to the following pseudo-code:

Set $c = 0$ – cell index: lower indices correspond to lower RRC indices of corresponding cell

Set $j = 0$ – HARQ-ACK bit index

while c < N_{cells}^{DL}

set $l = 0$;

while $l < B_c^{DL}$

if transmission mode configured in cell $c \in \{1,2,5,6,7\}$ – 1 bit HARQ-ACK feedback for this cell

$\tilde{o}_j^{ACK} = o_{c,l}^{ACK}$ HARQ-ACK bit of this cell as defined in Section 7.3 of [3]

$j = j + 1$

else

$\tilde{o}_j^{ACK} = o_{c,l}^{ACK}$ binary AND operation of the HARQ-ACK bits corresponding to the first and second codewords of this cell as defined in Section 7.3 of [3]

$j = j + 1$

end if

$l = l+1$

end while

$c = c + 1$

end while

For $o^{ACK} \le 11$ or $o^{ACK} > 22$, the bit sequence $o_0^{ACK}\ o_1^{ACK},...,o_{O^{ACK}-1}^{ACK}$ is obtained by setting $o_i^{ACK} = \tilde{o}_i^{ACK}$.

For $11 < o^{ACK} \le 22$, the bit sequence $o_0^{ACK}\ o_1^{ACK},...,o_{O^{ACK}-1}^{ACK}$ is obtained by setting $o_{i/2}^{ACK} = \tilde{o}_i^{ACK}$ if i is even and $o_{\lceil O^{ACK}/2 \rceil + (i-1)/2}^{ACK} = \tilde{o}_i^{ACK}$ if i is odd.

For the cases with TDD primary cell when HARQ-ACK is for the aggregation of two DL cells and the UE is configured with PUCCH format 1b with channel selection, the bit sequence $o_0^{ACK}\ o_1^{ACK},...,o_{O^{ACK}-1}^{ACK}$ is obtained as described in section 7.3 of [3].

For TDD HARQ-ACK bundling, a bit sequence $\tilde{q}_0^{ACK}, \tilde{q}_1^{ACK}, \tilde{q}_2^{ACK},...,\tilde{q}_{Q_{ACK}-1}^{ACK}$ is obtained by concatenation of multiple encoded HARQ-ACK blocks where Q_{ACK} is the total number of coded bits for all the encoded HARQ-ACK blocks. The last concatenation of the encoded HARQ-ACK block may be partial so that the total bit sequence length is equal to Q_{ACK}. A scrambling sequence $\left[w_0^{ACK}\ w_1^{ACK}\ w_2^{ACK}\ w_3^{ACK}\right]$ is then selected from Table 5.2.2.6-A with index $i = (N_{bundled} - 1) \bmod 4$, where N_{bundled} is determined as described in section 7.3 of [3]. The bit sequence

Samsung Exhibit 1017, Page 31 of 121

$q_0^{ACK}, q_1^{ACK}, q_2^{ACK}, ..., q_{Q_{ACK}-1}^{ACK}$ is then generated by setting $m = 1$ if HARQ-ACK consists of 1-bit and $m = 3$ if HARQ-ACK consists of 2-bits and then scrambling $\tilde{q}_0^{ACK}, \tilde{q}_1^{ACK}, \tilde{q}_2^{ACK}, ..., \tilde{q}_{Q_{ACK}-1}^{ACK}$ as follows

Set i ,k to 0

while $i < Q_{ACK}$

if $\tilde{q}_i^{ACK} = y$ // place-holder repetition bit

$$q_i^{ACK} = \left(\tilde{q}_{i-1}^{ACK} + w_{\lfloor k/m \rfloor}^{ACK}\right) \bmod 2$$

$$k = (k+1) \bmod 4m$$

else

if $\tilde{q}_i^{ACK} = x$ // a place-holder bit

$$q_i^{ACK} = \tilde{q}_i^{ACK}$$

else // coded bit

$$q_i^{ACK} = \left(\tilde{q}_i^{ACK} + w_{\lfloor k/m \rfloor}^{ACK}\right) \bmod 2$$

$$k = (k+1) \bmod 4m$$

end if

$i = i + 1$

end while

Table 5.2.2.6-A: Scrambling sequence selection for TDD HARQ-ACK bundling.

i	$\left[w_0^{ACK} w_1^{ACK} w_2^{ACK} w_3^{ACK}\right]$
0	[1 1 1 1]
1	[1 0 1 0]
2	[1 1 0 0]
3	[1 0 0 1]

When HARQ-ACK information is to be multiplexed with UL-SCH at a given PUSCH, the HARQ-ACK information is multiplexed in all layers of all transport blocks of that PUSCH, For a given transport block, the vector sequence output of the channel coding for HARQ-ACK information is denoted by $\underline{q}_0^{ACK}, \underline{q}_1^{ACK}, ..., \underline{q}_{Q'_{ACK}-1}^{ACK}$, where $\underline{q}_i^{ACK}$, $i = 0, ..., Q'_{ACK} - 1$ are column vectors of length $(Q_m \cdot N_L)$ and where $Q'_{ACK} = Q_{ACK} / Q_m$ is obtained as follows:

Set i ,k to 0

while $i < Q_{ACK}$

$\underline{\hat{q}}_k^{ACK} = [q_i^{ACK} ... q_{i+Q_m-1}^{ACK}]$ -- temporary row vector

$\underline{q}_k^{ACK} = [\overbrace{\underline{\hat{q}}_k^{ACK} \cdots \underline{\hat{q}}_k^{ACK}}^{N_L}]^T$ -- replicating the row vector $\underline{\hat{q}}_k^{ACK}$ N_L times and transposing into a column vector

Samsung Exhibit 1017, Page 32 of 121

$i = i + Q_m$

$k = k + 1$

end while

where N_L is the number of layers onto which the UL-SCH transport block is mapped.

For rank indication (RI) (RI only, joint report of RI and i1, joint report of CRI and RI, joint report of CRI,RI and i1,joint report of CRI,RI, and PTI, and joint report of RI and PTI) or CRI

- The corresponding bit widths for CRI feedback for PDSCH transmissions are given by Tables 5.2.2.6.1-3A, 5.2.2.6.2-3A, 5.2.2.6.3-3A, 5.2.3.3.1-3D,
- The corresponding bit widths for RI feedback for PDSCH transmissions are given by Tables 5.2.2.6.1-2, 5.2.2.6.2-3, 5.2.2.6.2-3B, 5.2.2.6.3-3, 5.2.2.6.3-3B, 5.2.3.3.1-3, 5.2.3.3.1-3A, 5.2.3.3.1-3B, 5.2.3.3.1-3C, 5.2.3.3.1-3D, 5.2.3.3.2-4, and 5.2.3.3.2-4A, 5.2.3.3.2-4B, 5.2.3.3.2-4C, 5.2.3.3.2-4D which are determined assuming the maximum number of layers as follows:
  - If the *maxLayersMIMO-r10* is configured for the DL cell, the maximum number of layers is determined according to *maxLayersMIMO-r10* for the DL cell
  - Else,
    - If the UE is configured with transmission mode 9, and the *supportedMIMO-CapabilityDL-r10* field is included in the *UE-EUTRA-Capability*, the maximum number of layers is determined according to the minimum of the configured number of CSI-RS ports and the maximum of the reported UE downlink MIMO capabilities for the same band in the corresponding band combination.
    - If the UE is configured with transmission mode 9 and Class B CSI reporting with K>1 and RI and CRI are transmitted in the same reporting instance, and the supportedMIMO-CapabilityDL-r10 field is included in the UE-EUTRA-Capability, the maximum number of layers is determined according to the minimum of the maximum of number of antenna port of the configured CSI-RS resources and the maximum of the reported UE downlink MIMO capabilities for the same band in the corresponding band combination,.
    - If the UE is configured with transmission mode 9, and the *supportedMIMO-CapabilityDL-r10* field is not included in the *UE-EUTRA-Capability*, the maximum number of layers is determined according to the minimum of the configured number of CSI-RS ports and *ue-Category* (without suffix).
    - If the UE is configured with transmission mode 9 and Class B CSI reporting with K>1 and RI and CRI are transmitted in the same reporting instance, and the supportedMIMO-CapabilityDL-r10 field is not included in the UE-EUTRA-Capability, the maximum number of layers is determined according to the minimum of the maximum of number of antenna port of the configured CSI-RS resources and ue-Category (without suffix).
    - If the UE is configured with transmission mode 10, and the *supportedMIMO-CapabilityDL-r10* field is included in the *UE-EUTRA-Capability*, the maximum number of layers for each CSI process is determined according to the minimum of the configured number of CSI-RS ports for that CSI process and the maximum of the reported UE downlink MIMO capabilities for the same band in the corresponding band combination.
    - If the UE is configured with transmission mode 10 and Class B CSI reporting with K>1 and RI and CRI are transmitted in the same reporting instance, and the supportedMIMO-CapabilityDL-r10 field is included in the UE-EUTRA-Capability, the maximum number of layers for each CSI process is determined according to the minimum of the maximum of number of antenna port of the configured CSI-RS resources in that CSI process and the maximum of the reported UE downlink MIMO capabilities for the same band in the corresponding band combination.
    - If the UE is configured with transmission mode 10, and the *supportedMIMO-CapabilityDL-r10* field is not included in the *UE-EUTRA-Capability*, the maximum number of layers for each CSI process is determined according to the minimum of the configured number of CSI-RS ports for that CSI process and *ue-Category* (without suffix).

Samsung Exhibit 1017, Page 33 of 121

- If the UE is configured with transmission mode 10 and Class B CSI reporting with K>1 and RI and CRI are transmitted in the same reporting instance, and the supportedMIMO-CapabilityDL-r10 field is not included in the UE-EUTRA-Capability, the maximum number of layers for each CSI process is determined according to the minimum of the maximum of number of antenna port of the configured CSI-RS resources in that CSI process and ue-Category (without suffix).
- Otherwise the maximum number of layers is determined according to the minimum of the number of PBCH antenna ports and *ue-Category* (without suffix).

- If RI feedback consists of 1-bit of information, i.e., $[o_0^{RI}]$, it is first encoded according to Table 5.2.2.6-3. The $[o_0^{RI}]$ to RI mapping is given by Table 5.2.2.6-5.
- If RI feedback consists of 2-bits of information, i.e., $[o_0^{RI}\ o_1^{RI}]$ with o_0^{RI} corresponding to MSB of 2-bit input and o_1^{RI} corresponding to LSB, it is first encoded according to Table 5.2.2.6-4 where $o_2^{RI} = (o_0^{RI} + o_1^{RI}) \bmod 2$. The $[o_0^{RI}\ o_1^{RI}]$ to RI mapping is given by Table 5.2.2.6-6.

Table 5.2.2.6-3: Encoding of 1-bit RI.

Q_m	Encoded RI
2	$[o_0^{RI}$ y]
4	$[o_0^{RI}$ y x x]
6	$[o_0^{RI}$ y x x x x]

Table 5.2.2.6-4: Encoding of 2-bit RI.

Q_m	Encoded RI
2	$[o_0^{RI}\ o_1^{RI}\ o_2^{RI}\ o_0^{RI}\ o_1^{RI}\ o_2^{RI}]$
4	$[o_0^{RI}\ o_1^{RI}$ x x $o_2^{RI}\ o_0^{RI}$ x x $o_1^{RI}\ o_2^{RI}$ x x]
6	$[o_0^{RI}\ o_1^{RI}$ x x x x $o_2^{RI}\ o_0^{RI}$ x x x x $o_1^{RI}\ o_2^{RI}$ x x x x]

Table 5.2.2.6-5: o_0^{RI} to RI mapping.

o_0^{RI}	RI
0	1
1	2

Table 5.2.2.6-6: o_0^{RI}, o_1^{RI} to RI mapping.

o_0^{RI}, o_1^{RI}	RI
0, 0	1
0, 1	2
1, 0	3
1, 1	4

Samsung Exhibit 1017, Page 34 of 121

Table 5.2.2.6-7: o_0^{RI} , o_1^{RI} , o_2^{RI} to RI mapping.

o_0^{RI} , o_1^{RI} , o_2^{RI}	RI
0, 0, 0	1
0, 0, 1	2
0, 1, 0	3
0, 1, 1	4
1, 0, 0	5
1, 0, 1	6
1, 1, 0	7
1, 1, 1	8

If RI feedback for a given DL cell consists of 3-bits of information, i.e., $[o_0^{RI}\ o_1^{RI}\ o_2^{RI}]$ with o_0^{RI} corresponding to MSB of 3-bit input and o_2^{RI} corresponding to LSB. The $[o_0^{RI}\ o_1^{RI}\ o_2^{RI}]$ to RI mapping is given by Table 5.2.2.6-7.

If RI feedback consists of $3 \le O^{RI} \le 11$ bits of information, i.e., $[o_0^{RI}\ o_1^{RI},...,o_{O^{RI}-1}^{RI}]$, then a coded bit sequence $[\tilde{q}_0^{RI}\ \tilde{q}_1^{RI},...,\tilde{q}_{31}^{RI}]$ is obtained by using the bit sequence $[o_0^{RI}\ o_1^{RI},...,o_{O^{RI}-1}^{RI}]$ as the input to the channel coding block described in section 5.2.2.6.4.

If RI feedback consists of $11 < O^{RI} \le 22$ bits of information as a result of the aggregation of RI bits corresponding to multiple DL cells or multiple CSI processes, i.e., $[o_0^{RI}\ o_1^{RI},...,o_{O^{RI}-1}^{RI}]$, then the coded bit sequence $q_0^{RI}, q_1^{RI}, q_2^{RI},..., q_{Q_{RI}-1}^{RI}$ is obtained by using the bit sequence $[o_0^{RI}\ o_1^{RI},...,o_{O^{RI}-1}^{RI}]$ as the input to the channel coding block described in section 5.2.2.6.5.

If RI feedback consists of $O^{RI} > 22$ bits of information as a result of the aggregation of RI bits corresponding to multiple DL cells or multiple CSI processes, i.e., $[o_0^{RI}\ o_1^{RI},...,o_{O^{RI}-1}^{RI}]$, then the coded bit sequence is denoted by $q_0^{RI}, q_1^{RI}, q_2^{RI},..., q_{Q_{RI}-1}^{RI}$. The CRC attachment, channel coding and rate matching of the HARQ-ACK bits are performed according to sections 5.1.1 setting L to 8 bits, 5.1.3.1 and 5.1.4.2, respectively. The input bit sequence to the CRC attachment operation is $[o_0^{RI}\ o_1^{RI},...,o_{O^{RI}-1}^{RI}]$. The output bit sequence of the CRC attachment operation is the input bit sequence to the channel coding operation. The output bit sequence of the channel coding operation is the input bit sequence to the rate matching operation.

The "x" and "y" in Table 5.2.2.6-3 and 5.2.2.6-4 are placeholders for [2] to scramble the RI bits in a way that maximizes the Euclidean distance of the modulation symbols carrying rank information.

For the case where RI feedback for more than one DL cell is to be reported, the RI report for each DL cell is concatenated prior to coding in increasing order of cell index.

For the case where RI feedback for more than one CSI process is to be reported, the RI reports are concatenated prior to coding first in increasing order of CSI process index for each DL cell and then in increasing order of cell index.

For the case where RI feedback consists of one or two bits of information the bit sequence $q_0^{RI}, q_1^{RI}, q_2^{RI},..., q_{Q_{RI}-1}^{RI}$ is obtained by concatenation of multiple encoded RI blocks where Q_{RI} is the total number of coded bits for all the encoded RI blocks. The last concatenation of the encoded RI block may be partial so that the total bit sequence length is equal to Q_{RI} .

For the case where RI feedback consists of $3 \le O^{RI} \le 11$ bits of information, the bit sequence $q_0^{RI}, q_1^{RI}, q_2^{RI},..., q_{Q_{RI}-1}^{RI}$ is obtained by the circular repetition of the bit sequence $\tilde{q}_0^{RI}\ \tilde{q}_1^{RI},...,\tilde{q}_{31}^{RI}$ so that the total bit sequence length is equal to Q_{RI} .

Samsung Exhibit 1017, Page 35 of 121

When rank information is to be multiplexed with UL-SCH at a given PUSCH, the rank information is multiplexed in all layers of all transport blocks of that PUSCH. For a given transport block, the vector sequence output of the channel coding for rank information is denoted by $\underline{q}_0^{RI}, \underline{q}_1^{RI}, ..., \underline{q}_{Q'_{RI}-1}^{RI}$, where $\underline{q}_i^{RI}$, $i = 0,...,Q'_{RI}-1$ are column vectors of length $(Q_m \cdot N_L)$ and where $Q'_{RI} = Q_{RI} / Q_m$. The vector sequence is obtained as follows:

Set *i, j, k* to 0

while $i < Q_{RI}$

$\underline{\hat{q}}_k^{RI} = [q_i^{RI} \ ... q_{i+Q_m-1}^{RI}]$ -- temporary row vector

$\underline{q}_k^{RI} = [\overbrace{\underline{\hat{q}}_k^{RI} \cdots \underline{\hat{q}}_k^{RI}}^{N_L}]^T$ -- replicating the row vector $\underline{\hat{q}}_k^{RI}$ N_L times and transposing into a column vector

$i = i + Q_m$

$k = k + 1$

end while

where N_L is the number of layers onto which the UL-SCH transport block is mapped.

The same procedures for encoding of RI and RI multiplexing with UL-SCH at a given PUSCH are applied for CRI, using CRI instead of RI in the equations.

For channel quality control information (CQI and/or PMI denoted as CQI/PMI);

When the UE transmits channel quality control information bits, it shall determine the number of modulation coded symbols per layer Q' for channel quality information as

$$Q' = \min\left(\left\lceil \frac{(O+L) \cdot M_{sc}^{PUSCH-initial(x)} \cdot N_{symb}^{PUSCH-initial(x)} \cdot \beta_{offset}^{PUSCH}}{\sum_{r=0}^{C^{(x)}-1} K_r^{(x)}} \right\rceil, M_{sc}^{PUSCH} \cdot N_{symb}^{PUSCH} - \frac{Q_{RI}^{(x)}}{Q_m^{(x)}} \right)$$

where

- O is the number of CQI/PMI bits, and
- L is the number of CRC bits given by $L = \begin{cases} 0 & O \le 11 \\ 8 & \text{otherwise} \end{cases}$, and
- $Q_{CQI} = Q_m^{(x)} \cdot Q'$ and $\beta_{offset}^{PUSCH} = \beta_{offset}^{CQI}$, where β_{offset}^{CQI} shall be determined according to [3] depending on the number of transmission codewords for the corresponding PUSCH, and on the uplink power control subframe set for the corresponding PUSCH when two uplink power control subframe sets are configured by higher layers for the cell.
- If RI or CRI is not transmitted then $Q_{RI}^{(x)} = 0$.

The variable "*x*" in $K_r^{(x)}$ represents the transport block index corresponding to the highest I_{MCS} value indicated by the initial UL grant. In case the two transport blocks have the same I_{MCS} value in the corresponding initial UL grant, "*x* =1", which corresponds to the first transport block. $M_{sc}^{PUSCH-initial(x)}$, $C^{(x)}$, and $K_r^{(x)}$ are obtained from the initial PDCCH or EPDCCH for the same transport block. If there is no initial PDCCH or EPDCCH with DCI format 0 for the same transport block, $M_{sc}^{PUSCH-initial(x)}$, $C^{(x)}$, and $K_r^{(x)}$ shall be determined from:

Samsung Exhibit 1017, Page 36 of 121

- the most recent semi-persistent scheduling assignment PDCCH or EPDCCH, when the initial PUSCH for the same transport block is semi-persistently scheduled, or,
- the random access response grant for the same transport block, when the PUSCH is initiated by the random access response grant.

$N_{symb}^{PUSCH-initial(x)}$ is the number of SC-FDMA symbols per subframe for initial PUSCH transmission for the same transport block.

For UL-SCH data information $G = N_L^{(x)} \cdot \left(N_{\text{symb}}^{\text{PUSCH}} \cdot M_{\text{sc}}^{\text{PUSCH}} \cdot Q_m^{(x)} - Q_{CQI} - Q_{RI}^{(x)}\right)$, where

- $N_L^{(x)}$ is the number of layers the corresponding UL-SCH transport block is mapped onto, and
- $M_{\text{sc}}^{\text{PUSCH}}$ is the scheduled bandwidth for PUSCH transmission in the current sub-frame for the transport block, and
- $N_{\text{symb}}^{\text{PUSCH}}$ is the number of SC-FDMA symbols in the current PUSCH transmission sub-frame given by $N_{\text{symb}}^{\text{PUSCH}} = \left(2 \cdot \left(N_{\text{symb}}^{\text{UL}} - 1\right) - N_{SRS}\right)$, where
  - N_{SRS} is equal to 1
    - if UE configured with one UL cell is configured to send PUSCH and SRS in the same subframe for initial transmission, or
    - if UE transmits PUSCH and SRS in the same subframe for the current subframe in the same serving cell, or
    - if the PUSCH resource allocation for the current subframe even partially overlaps with the cell-specific SRS subframe and bandwidth configuration defined in section 5.5.3 of [2], or
    - if the current subframe in the same serving cell is a UE-specific type-1 SRS subframe as defined in Section 8.2 of [3], or
    - if the current subframe in the same serving cell is a UE-specific type-0 SRS subframe as defined in section 8.2 of [3] and the UE is configured with multiple TAGs.
  - Otherwise N_{SRS} is equal to 0.

In case of CQI/PMI report for more than one DL cell, $o_0, o_1, o_2, ..., o_{O-1}$ is the result of concatenating the CQI/PMI report for each DL cell in increasing order of cell index. For the case where CQI/PMI feedback for more than one CSI process is to be reported, $o_0, o_1, o_2, ..., o_{O-1}$ is the result of concatenating the CQI/PMI reports in increasing order of CSI process index for each DL cell and then in increasing order of cell index.

– If the payload size is less than or equal to 11 bits, the channel coding of the channel quality information is performed according to section 5.2.2.6.4 with input sequence $o_0, o_1, o_2, ..., o_{O-1}$.

– For payload sizes greater than 11 bits, the CRC attachment, channel coding and rate matching of the channel quality information is performed according to sections 5.1.1, 5.1.3.1 and 5.1.4.2, respectively. The input bit sequence to the CRC attachment operation is $o_0, o_1, o_2, ..., o_{O-1}$. The output bit sequence of the CRC attachment operation is the input bit sequence to the channel coding operation. The output bit sequence of the channel coding operation is the input bit sequence to the rate matching operation.

The output sequence for the channel coding of channel quality information is denoted by $q_0, q_1, q_2, q_3, ..., q_{N_L \cdot Q_{CQI} - 1}$, where N_L is the number of layers the corresponding UL-SCH transport block is mapped onto.

Samsung Exhibit 1017, Page 37 of 121

5.2.2.6.1 Channel quality information formats for wideband CQI reports

If the parameter *CQI-ReportModeAperiodic* is configured to the value of *rm10-v13xy* by higher layers [6], Table 5.2.3.3.1-1 shows the fields and the corresponding bit widths for the channel quality information feedback, Table 5.2.3.3.1-3 shows the fields and the corresponding bit widths for the rank indication feedback.

If the parameter *CQI-ReportModeAperiodic* is configured to the value of *rm11-v13xx* by higher layers [6], Table 5.2.3.3.1-2, Table 5.2.3.3.1-2A, Table 5.2.3.3.1-2B, Table 5.2.3.3.1-2C and Table 5.2.3.3.1-2D show the fields and the corresponding bit widths for the channel quality and precoding matrix information feedback, Table 5.2.3.3.1-3 shows the fields and the corresponding bit widths for the rank indication feedback, and Table 5.2.3.3.1-3A and Table 5.2.3.3.1-3B show the fields and the corresponding bit widths for the joint transmission of rank indication and i1.

If the parameter *CQI-ReportModeAperiodic* is configured to the value of *rm12* by higher layers [6], the fields and the corresponding bit widths for channel quality information and rank indication feedback are described as below.

Table 5.2.2.6.1-1, Table 5.2.2.6.1-1A and Table 5.2.2.6.1-1B show the fields and the corresponding bit widths for the channel quality information feedback for wideband reports for PDSCH transmissions associated with transmission mode 4, transmission mode 6, transmission mode 8 configured with PMI/RI reporting, transmission mode 9 configured with PMI/RI reporting with 2/4/8 antenna ports, and transmission mode 10 configured with PMI/RI reporting with 2/4/8 antenna ports, and transmission mode 9/10 configured with PMI/RI reporting with 2/4/8 antenna ports for Class B CSI reporting with K>1, and K=1 with *PMI-Config* =2. The number of CSI-RS resources K is defined in [3] and *PMI-Config* is configured by higher layers [6].

Table 5.2.2.6.1-1C and Table 5.2.2.6.1-1D show the fields and the corresponding bit widths for the channel quality information feedback for wideband reports for PDSCH transmissions associated with transmission mode 9/10 configured with PMI/RI reporting with 8/12/16 antenna ports for Class A CSI reporting.

Table 5.2.2.6.2-1E shows the fields and corresponding bit widths for the channel quality information feedback for wideband reports for PDSCH transmissions associated with transmission mode 9/10 configured with PMI/RI reporting with 2/4/8 antenna ports for Class B CSI reporting with K=1 and *PMI-Config* =1.

For Table 5.2.2.6.1-1, Table 5.2.2.6.1-1A, Table 5.2.2.6.1-1B, Table 5.2.2.6.1-1C, Table 5.2.2.6.1-D and Table 5.2.2.6.1-1E, N is defined in section 7.2 of [3]. For Table 5.2.2.6.1-1C and Table 5.2.2.6.1-D, the codebook configuration (N_1, N_2, O_1, O_2) is defined in [3], and *Codebook-Subset-SelectionConfig* is configured by higher layers [6]. The parameters (S_1, S_2) in rank 3 and 4 are defined as $(S_1, S_2) = (1, 1)$ for *Codebook-Subset-SelectionConfig*=1, $(S_1, S_2) = \left(\frac{O_1}{2}, \frac{O_2}{2}\right)$ for *Codebook-Subset-SelectionConfig*=2, $(S_1, S_2) = \left(O_1, \frac{O_2}{2}\right)$ for *Codebook-Subset-SelectionConfig*=3, $(S_1, S_2) = \left(O_1, \frac{O_2}{4}\right)$ for *Codebook-Subset-SelectionConfig*=4. The parameters (S_1, S_2) in rank 5 to 8 are defined as $(S_1, S_2) = (1, 1)$ for *Codebook-Subset-SelectionConfig*=1, $(S_1, S_2) = \left(\frac{O_1}{4}, \frac{O_2}{4}\right)$ for *Codebook-Subset-SelectionConfig*=2/3/4.

Samsung Exhibit 1017, Page 38 of 121

Table 5.2.2.6.1-1: Fields for channel quality information feedback for wideband CQI reports (transmission mode 4, transmission mode 6, transmission mode 8 configured with PMI/RI reporting except with *alternativeCodeBookEnabledFor4TX-r12=TRUE*, transmission mode 9 configured with PMI/RI reporting with 2/4 antenna ports except with *alternativeCodeBookEnabledFor4TX-r12=TRUE*, transmission mode 10 configured with PMI/RI reporting with 2/4 antenna ports except with *alternativeCodeBookEnabledFor4TX-r12=TRUE,* and transmission mode 9/10 configured with PMI/RI reporting for Class B CSI reporting with 2/4 antenna ports with K>1, and K=1 with *PMI-Config=2*, except with *alternativeCodeBookEnabledFor4TX-r12=TRUE*).

Field	Bit width			
	2 antenna ports		4 antenna ports	
	Rank = 1	Rank = 2	Rank = 1	Rank > 1
Wideband CQI codeword 0	4	4	4	4
Wideband CQI codeword 1	0	4	0	4
Precoding matrix indicator	$2N$	N	$4N$	$4N$

Table 5.2.2.6.1-1A: Fields for channel quality information feedback for wideband CQI reports (transmission mode 9 configured with PMI/RI reporting with 8 antenna ports, transmission mode 10 configured with PMI/RI reporting with 8 antenna ports, and transmission mode 9/10 configured with PMI/RI reporting for Class B CSI reporting with 8 antenna ports with K>1, and K=1 with *PMI-Config=2*).

Field	Bit width			
	Rank = 1	Rank = 2	Rank = 3	Rank = 4
Wideband CQI codeword 0	4	4	4	4
Wideband CQI codeword 1	0	4	4	4
Wideband first PMI i1	4	4	2	2
Subband second PMI i2	$4N$	$4N$	$4N$	$3N$
Field	Bit width			
	Rank = 5	Rank = 6	Rank = 7	Rank = 8
Wideband CQI codeword 0	4	4	4	4
Wideband CQI codeword 1	4	4	4	4
Wideband first PMI i1	2	2	2	0
Subband second PMI i2	0	0	0	0

Table 5.2.2.6.1-1B: Fields for channel quality information feedback for wideband CQI reports with 4 antenna ports (transmission mode 8, transmission mode 9 and transmission mode 10 configured with PMI/RI reporting, 4 antenna ports and *alternativeCodeBookEnabledFor4TX-r12=TRUE,* and transmission mode 9/10 configured with PMI/RI reporting for Class B CSI reporting with 4 antenna ports with K>1, and K=1 with *PMI-Config=2*, with *alternativeCodeBookEnabledFor4TX-r12=TRUE*)

Field	Bit width			
	Rank = 1	Rank = 2	Rank = 3	Rank = 4
Wideband CQI codeword 0	4	4	4	4
Wideband CQI codeword 1	0	4	4	4
Wideband first PMI i1	4	4	0	0
Subband second PMI i2	$4N$	$4N$	$4N$	$4N$

Table 5.2.2.6.1-1C: Fields for channel quality information feedback for wideband CQI reports (transmission mode 9/10 configured with PMI/RI reporting for Class A CSI reporting with codebook configuration (N_1, N_2, O_1, O_2) and *Codebook-Subset-SelectionConfig*=1)

Field	Bit width			
	Rank = 1	Rank = 2	Rank =3	Rank =4

Samsung Exhibit 1017, Page 39 of 121

Wideband CQI codeword 0	4	4	4	4
Wideband CQI codeword 1	0	4	4	4
Wideband first PMI i1,1	$\lceil \log_2(N_1O_1) \rceil$	$\lceil \log_2(N_1O_1) \rceil$	$\left\lceil \log_2\left(\frac{N_1O_1}{S_1}\right) \right\rceil + \left\lfloor \frac{7-N_2}{3} \right\rfloor$	$\left\lceil \log_2\left(\frac{N_1O_1}{S_1}\right) \right\rceil + \left\lfloor \frac{7-N_2}{3} \right\rfloor$
Wideband first PMI i1,2	$\lceil \log_2(N_2O_2) \rceil$	$\lceil \log_2(N_2O_2) \rceil$	$\lceil \log_2(N_2O_2) \rceil$	$\lceil \log_2(N_2O_2) \rceil$
Subband second PMI i2	$2N$	$2N$	N	N
Field	**Bit width**			
	Rank = 5	**Rank = 6**	**Rank =7**	**Rank =8**
Wideband CQI codeword 0	4	4	4	4
Wideband CQI codeword 1	4	4	4	4
Wideband first PMI i1,1	$\lceil \log_2(N_1O_1/S_1) \rceil$	$\lceil \log_2(N_1O_1/S_1) \rceil$	$\lceil \log_2(N_1O_1/S_1) \rceil$	$\lceil \log_2(N_1O_1/S_1) \rceil$
Wideband first PMI i1,2	$\lceil \log_2(N_2O_2/S_2) \rceil$	$\lceil \log_2(N_2O_2/S_2) \rceil$	$\lceil \log_2(N_2O_2/S_2) \rceil$	$\lceil \log_2(N_2O_2/S_2) \rceil$
Subband second PMI i2	0	0	0	0

Table 5.2.2.6.1-1D: Fields for channel quality information feedback for wideband CQI reports (transmission mode 9/10 configured with Class A CSI reporting with codebook configuration (N_1, N_2, O_1, O_2) and *Codebook-Subset-SelectionConfig*=2/3/4)

Field	**Bit width**			
	Rank = 1	**Rank = 2**	**Rank = 3**	**Rank = 4**
Wideband CQI codeword 0	4	4	4	4
Wideband CQI codeword 1	0	4	4	4
Wideband first PMI i1,1	$\lceil \log_2(N_1O_1/2) \rceil$	$\lceil \log_2(N_1O_1/2) \rceil$	$\left\lceil \log_2\left(\frac{N_1O_1}{S_1}\right) \right\rceil + \left\lfloor \frac{7-N_2}{3} \right\rfloor$	$\left\lceil \log_2\left(\frac{N_1O_1}{S_1}\right) \right\rceil + \left\lfloor \frac{7-N_2}{3} \right\rfloor$
Wideband first PMI i1,2	$\lceil \log_2(N_2O_2/2) \rceil$	$\lceil \log_2(N_2O_2/2) \rceil$	$\left\lceil \log_2\left(\frac{N_2O_2}{S_2}\right) \right\rceil$	$\left\lceil \log_2\left(\frac{N_2O_2}{S_2}\right) \right\rceil$
Subband second PMI i2	$4N$	$4N$	$4N$	$3N$
Field	**Bit width**			
	Rank = 5	**Rank = 6**	**Rank = 7**	**Rank= 8**

Wideband CQI codeword 0	4	4	4	4
Wideband CQI codeword 1	4	4	4	4
Wideband first PMI i1,1	$\lceil \log_2 (N_1 O_1 / S_1) \rceil$	$\lceil \log_2 (N_1 O_1 / S_1) \rceil$	$\lceil \log_2 (N_1 O_1 / S_1) \rceil$	$\lceil \log_2 (N_1 O_1 / S_1) \rceil$
Wideband first PMI i1,2	$\lceil \log_2 (N_2 O_2 / S_2) \rceil$	$\lceil \log_2 (N_2 O_2 / S_2) \rceil$	$\lceil \log_2 (N_2 O_2 / S_2) \rceil$	$\lceil \log_2 (N_2 O_2 / S_2) \rceil$
Subband second PMI i2	0	0	0	0

Table 5.2.2.6.1-1E: Fields for channel quality information feedback for wideband CQI reports (transmission mode 9/10 configured with PMI/RI reporting for Class B CSI reporting with 2/4/8 antenna ports with K=1 with *PMI-Config* =1)

Field	Bit width					
	2 antenna ports		4 antenna ports			
	Rank = 1	Rank = 2	Rank = 1	Rank =2	Rank =3	Rank =4
Wideband CQI codeword 0	4	4	4	4	4	4
Wideband CQI codeword 1	0	4	0	4	4	4
Precoding matrix indicator	$2N$	N	$3N$	$3N$	$2N$	N
Field	**Bit width**					
	8 antenna ports					
	Rank = 1	**Rank = 2**	**Rank = 3**	**Rank =4**	**Rank =5~8**	
Wideband CQI codeword 0	4	4	4	4	4	
Wideband CQI codeword 1	0	4	0	4	4	
Precoding matrix indicator	$4N$	$4N$	$4N$	$3N$	0	

Table 5.2.2.6.1-2 shows the fields and the corresponding bit width for the rank indication feedback for wideband CQI reports for PDSCH transmissions associated with transmission mode 4, transmission mode 8 configured with PMI/RI reporting, transmission mode 9 configured with PMI/RI reporting with 2/4/8 antenna ports, transmission mode 10 configured with PMI/RI reporting with 2/4/8 antenna ports, and transmission mode 9/10 configured with PMI/RI reporting with 2/4/8 antenna ports for Class B CSI reporting, and transmission mode 9/10 configured with PMI/RI reporting with 8/12/16 antenna ports for Class A CSI reporting.

Table 5.2.2.6.1-2A shows the fields and the corresponding bit width for the joint CRI and RI feedback for wideband CQI reports for PDSCH transmissions associated with transmission mode 9/10 configured with PMI/RI reporting for Class B CSI reporting with K>1.

Table 5.2.2.6.1-2: Fields for rank indication feedback for wideband CQI reports (transmission mode 4, transmission mode 8 configured with PMI/RI reporting, transmission mode 9 configured with PMI/RI reporting with 2/4/8 antenna ports, and transmission mode 10 configured with PMI/RI reporting with 2/4/8 antenna ports, transmission mode 9/10 configured with PMI/RI reporting with 2/4/8 antenna ports for Class B CSI reporting, and transmission mode 9/10 configured with PMI/RI reporting with 8/12/16 antenna ports for Class A CSI reporting).

Field	Bit width					
	2 antenna ports	4 antenna ports		8/12/16 antenna ports		
		Max 2 layers	Max 4 layers	Max 2 layers	Max 4 layers	Max 8 layers
Rank indication	1	1	2	1	2	3

Samsung Exhibit 1017, Page 41 of 121

Table 5.2.2.6.1-2A: Fields for CRI feedback for wideband CQI reports (transmission mode 9/10 configured with PMI/RI reporting for Class B CSI reporting with K>1).

Field	Bit width		
	Max 2 layers	Max 4 layers	Max 8 layers
CRI	$\lceil \log_2(K) \rceil$	$\lceil \log_2(K) \rceil$	$\lceil \log_2(K) \rceil$
Rank indication	1	2	3

The channel quality bits in Table 5.2.2.6.1-1, Table 5.2.2.6.1-1A, Table 5.2.2.6.1-1B, Table 5.2.2.6.1-1C, Table 5.2.2.6.1-1D and Table 5.2.2.6.1-1E form the bit sequence $o_0, o_1, o_2, ..., o_{O-1}$ with o_0 corresponding to the first bit of the first field in the table, o_1 corresponding to the second bit of the first field in the table, and o_{O-1} corresponding to the last bit in the last field in the table. The field of PMI shall be in the increasing order of the subband index [3]. The first bit of each field corresponds to MSB and the last bit LSB. The RI bits sequence in Table 5.2.2.6.1-2 and Table 5.2.2.6.1-2A are encoded according to section 5.2.2.6.

5.2.2.6.2 Channel quality information formats for higher layer configured subband CQI reports

Table 5.2.2.6.2-1 shows the fields and the corresponding bit width for the channel quality information feedback for higher layer configured report for PDSCH transmissions associated with transmission mode 1, transmission mode 2, transmission mode 3, transmission mode 7, transmission mode 8 configured without PMI/RI reporting, transmission mode 9 configured without PMI/RI reporting or configured with 1 antenna port, and transmission mode 10 configured without PMI/RI reporting or configured with 1 antenna port. N in Table 5.2.2.6.2-1 is defined in section 7.2 of [3].

Table 5.2.2.6.2-1A shows the fields and the corresponding bit width for the channel quality information feedback for higher layer configured report for PDSCH transmissions associated with transmission mode 9/10 configured without PMI reporting for Class B CSI reporting with 2/4/8 antenna ports.

Table 5.2.2.6.2-1: Fields for channel quality information feedback for higher layer configured subband CQI reports (transmission mode 1, transmission mode 2, transmission mode 3, transmission mode 7, transmission mode 8 configured without PMI/RI reporting, transmission mode 9 configured without PMI/RI reporting or configured with 1 antenna port, and transmission mode 10 configured without PMI/RI reporting or configured with 1 antenna port)

Field	Bit width
Wide-band CQI codeword	4
Subband differential CQI	$2N$

Table 5.2.2.6.2-1A Fields for channel quality information feedback for higher layer configured subband CQI reports (transmission mode 9/10 configured without PMI reporting for Class B CSI reporting with 2/4/8 antenna ports)

Field	Bit width	
	Rank = 1	Rank > 1
Wide-band CQI codeword 0	4	4
Subband differential CQI codeword 0	$2N$	$2N$
Wide-band CQI codeword 1	0	4
Subband differential CQI codeword 1	0	$2N$

Table 5.2.2.6.2-2, Table 5.2.2.6.2-2A and Table 5.2.2.6.2-2B show the fields and the corresponding bit widths for the channel quality information feedback for higher layer configured report for PDSCH transmissions associated with transmission mode 4, transmission mode 5, transmission mode 6, transmission mode 8 configured with PMI/RI reporting, transmission mode 9 configured with PMI/RI reporting with 2/4/8 antenna ports, transmission mode 10 configured with PMI/RI reporting with 2/4/8 antenna ports, and transmission mode 9/10 configured with PMI/RI

Samsung Exhibit 1017, Page 42 of 121

reporting with 2/4/8 antenna ports for Class B CSI reporting with K>1, and K=1 with *PMI-Config* =2. The number of CSI-RS resources K is defined in [3] and *PMI-Config* is configured by higher layers [6].

Table 5.2.2.6.2-2B-1 and Table 5.2.2.6.2-2B-2 show the fields and the corresponding bit widths for the channel quality information feedback for higher layer configured report for PDSCH transmissions associated with transmission mode 9/10 configured with PMI/RI reporting with 8/12/16 antenna ports for Class A CSI reporting.

Table5.2.2.6.2-2B-3 shows the fields and the corresponding bit widths for the channel quality information feedback for higher layer configured report for PDSCH transmissions associated with transmission mode 9/10 configured with PMI/RI reporting with 2/4/8 antenna ports for Class B CSI reporting with K=1 and *PMI-Config* =1.

For Table 5.2.2.6.2-2, Table 5.2.2.6.2-2A, Table 5.2.2.6.2-2B, Table 5.2.2.6.2-2B-1, Table 5.2.2.6.2-2B-2 and Table 5.2.2.6.2-2B-3, N is defined in section 7.2 of [3]. For Table 5.2.2.6.2-2B-1 and Table 5.2.2.6.2-2B-2, the codebook configuration (N_1, N_2, O_1, O_2) is defined in [3], and *Codebook-Subset-SelectionConfig* is configured by higher layers [6]. The parameters (S_1, S_2) in rank 3 and 4 are defined as $(S_1, S_2) = (1, 1)$ for *Codebook-Subset-SelectionConfig*=1, $(S_1, S_2) = \left(\frac{O_1}{2}, \frac{O_2}{2}\right)$ for *Codebook-Subset-SelectionConfig*=2, $(S_1, S_2) = \left(O_1, \frac{O_2}{2}\right)$ for *Codebook-Subset-SelectionConfig*=3, $(S_1, S_2) = \left(O_1, \frac{O_2}{4}\right)$ for *Codebook-Subset-SelectionConfig*=4. The parameters (S_1, S_2) in rank 5 to 8 are defined as $(S_1, S_2) = (1, 1)$ for *Codebook-Subset-SelectionConfig*=1, $(S_1, S_2) = \left(\frac{O_1}{4}, \frac{O_2}{4}\right)$ for *Codebook-Subset-SelectionConfig*=2/3/4.

Table 5.2.2.6.2-2: Fields for channel quality information feedback for higher layer configured subband CQI reports (transmission mode 4, transmission mode 5, transmission mode 6, transmission mode 8 configured with PMI/RI reporting except with *alternativeCodeBookEnabledFor4TX-r12=TRUE*, transmission mode 9 configured with PMI/RI reporting with 2/4 antenna ports except with *alternativeCodeBookEnabledFor4TX-r12=TRUE*, transmission mode 10 configured with PMI/RI reporting with 2/4 antenna ports except with *alternativeCodeBookEnabledFor4TX-r12=TRUE,* and transmission mode 9/10 configured with PMI/RI reporting with 2/4 antenna ports for Class B CSI reporting with K>1, and K=1 with *PMI-Config*=2, except with *alternativeCodeBookEnabledFor4TX-r12=TRUE*)

Field	Bit width			
	2 antenna ports		4 antenna ports	
	Rank = 1	Rank = 2	Rank = 1	Rank > 1
Wide-band CQI codeword 0	4	4	4	4
Subband differential CQI codeword 0	$2N$	$2N$	$2N$	$2N$
Wide-band CQI codeword 1	0	4	0	4
Subband differential CQI codeword 1	0	$2N$	0	$2N$
Precoding matrix indicator	2	1	4	4

Table 5.2.2.6.2-2A: Fields for channel quality information feedback for higher layer configured subband CQI reports (transmission mode 9 configured with PMI/RI reporting with 8 antenna ports, transmission mode 10 configured with PMI/RI reporting with 8 antenna ports, and transmission mode 9/10 configured with PMI/RI reporting with 8 antenna ports for Class B CSI reporting with K>1, and K=1 with *PMI-Config*=2).

Field	Bitwidth			
	Rank = 1	Rank = 2	Rank = 3	Rank = 4

Samsung Exhibit 1017, Page 43 of 121

Wideband CQI codeword 0	4	4	4	4
Subband differential CQI codeword 0	$2N$	$2N$	$2N$	$2N$
Wideband CQI codeword 1	0	4	4	4
Subband differential CQI codeword 1	0	$2N$	$2N$	$2N$
Wideband first PMI i1	4	4	2	2
Wideband second PMI i2	4	4	4	3
Field	**Bitwidth**			
	Rank = 5	**Rank = 6**	**Rank = 7**	**Rank = 8**
Wideband CQI codeword 0	4	4	4	4
Subband differential CQI codeword 0	$2N$	$2N$	$2N$	$2N$
Wideband CQI codeword 1	4	4	4	4
Subband differential CQI codeword 1	$2N$	$2N$	$2N$	$2N$
Wideband first PMI i1	2	2	2	0
Wideband second PMI i2	0	0	0	0

Table 5.2.2.6.2-2B: Fields for channel quality information feedback for higher layer configured subband CQI reports with 4 antenna ports (transmission modes 8, 9 and 10 configured with PMI/RI reporting, 4 antenna ports and *alternativeCodeBookEnabledFor4TX-r12=TRUE,* and transmission mode 9/10 configured with PMI/RI reporting with 4 antenna ports for Class B CSI reporting with K>1, and K=1 with *PMI-Config*=2, with *alternativeCodeBookEnabledFor4TX-r12=TRUE*)

Field	Bitwidth			
	Rank = 1	**Rank = 2**	**Rank = 3**	**Rank = 4**
Wideband CQI codeword 0	4	4	4	4
Subband differential CQI codeword 0	$2N$	$2N$	$2N$	$2N$
Wideband CQI codeword 1	0	4	4	4
Subband differential CQI codeword 1	0	$2N$	$2N$	$2N$
Wideband first PMI i1	4	4	0	0
Wideband second PMI i2	4	4	4	4

Table 5.2.2.6.2-2B-1: Fields for channel quality information feedback for higher layer configured subband CQI reports (transmission mode 9/10 configured with Class A CSI reporting with codebook configuration (N_1, N_2, O_1, O_2) and *Codebook-Subset-SelectionConfig*=1)

Field	Bit width			
	Rank = 1	**Rank = 2**	**Rank =3**	**Rank =4**

Samsung Exhibit 1017, Page 44 of 121

Wideband CQI codeword 0	4	4	4	4
Subband differential CQI codeword 0	$2N$	$2N$	$2N$	$2N$
Wideband CQI codeword 1	0	4	4	4
Subband differential CQI codeword 1	0	$2N$	$2N$	$2N$
Wideband first PMI i1,1	$\lceil \log_2(N_1O_1) \rceil$	$\lceil \log_2(N_1O_1) \rceil$	$\left\lceil \log_2\left(\frac{N_1O_1}{S_1}\right)\right\rceil + \left\lfloor \frac{7-N_2}{3} \right\rfloor$	$\left\lceil \log_2\left(\frac{N_1O_1}{S_1}\right)\right\rceil + \left\lfloor \frac{7-N_2}{3} \right\rfloor$
Wideband first PMI i1,2	$\lceil \log_2(N_2O_2) \rceil$	$\lceil \log_2(N_2O_2) \rceil$	$\lceil \log_2(N_2O_2/S_2) \rceil$	$\lceil \log_2(N_2O_2/S_2) \rceil$
Wideband second PMI i2	2	2	1	1
Field	**Bit width**			
	Rank = 5	**Rank = 6**	**Rank =7**	**Rank =8**
Wideband CQI codeword 0	4	4	4	4
Subband differential CQI codeword 0	$2N$	$2N$	$2N$	$2N$
Wideband CQI codeword 1	4	4	4	4
Subband differential CQI codeword 1	$2N$	$2N$	$2N$	$2N$
Wideband first PMI i1,1	$\lceil \log_2(N_1O_1/S_1) \rceil$	$\lceil \log_2(N_1O_1/S_1) \rceil$	$\lceil \log_2(N_1O_1/S_1) \rceil$	$\lceil \log_2(N_1O_1/S_1) \rceil$
Wideband first PMI i1,2	$\lceil \log_2(N_2O_2/S_2) \rceil$	$\lceil \log_2(N_2O_2/S_2) \rceil$	$\lceil \log_2(N_2O_2/S_2) \rceil$	$\lceil \log_2(N_2O_2/S_2) \rceil$
Wideband second PMI i2	0	0	0	0

Table 5.2.2.6.2-2B-2: Fields for channel quality information feedback for higher layer configured subband CQI reports (transmission mode 9/10 configured with Class A CSI reporting with codebook configuration (N_1, N_2, O_1, O_2) and *Codebook-Subset-SelectionConfig*=2/3/4)

Field	**Bit width**			
	Rank = 1	**Rank = 2**	**Rank =3**	**Rank =4**

Samsung Exhibit 1017, Page 45 of 121

Wideband CQI codeword 0	4	4	4	4
Subband differential CQI codeword 0	$2N$	$2N$	$2N$	$2N$
Wideband CQI codeword 1	0	4	4	4
Subband differential CQI codeword 1	0	$2N$	$2N$	$2N$
Wideband first PMI i1,1	$\lceil \log_2(N_1O_1) \rceil$	$\lceil \log_2(N_1O_1) \rceil$	$\left\lceil \log_2\left(\frac{N_1O_1}{S_1}\right) \right\rceil + \left\lfloor \frac{7-N_2}{3} \right\rfloor$	$\left\lceil \log_2\left(\frac{N_1O_1}{S_1}\right) \right\rceil + \left\lfloor \frac{7-N_2}{3} \right\rfloor$
Wideband first PMI i1,2	$\lceil \log_2(N_2O_2) \rceil$	$\lceil \log_2(N_2O_2) \rceil$	$\left\lceil \log_2\left(\frac{N_2O_2}{S_2}\right) \right\rceil$	$\left\lceil \log_2\left(\frac{N_2O_2}{S_2}\right) \right\rceil$
Wideband second PMI i2	2	2	4	3
Field	**Bit width**			
	Rank = 5	**Rank = 6**	**Rank =7**	**Rank =8**
Wideband CQI codeword 0	4	4	4	4
Subband differential CQI codeword 0	$2N$	$2N$	$2N$	$2N$
Wideband CQI codeword 1	4	4	4	4
Subband differential CQI codeword 1	$2N$	$2N$	$2N$	$2N$
Wideband first PMI i1,1	$\lceil \log_2(N_1O_1/S_1) \rceil$	$\lceil \log_2(N_1O_1/S_1) \rceil$	$\lceil \log_2(N_1O_1/S_1) \rceil$	$\lceil \log_2(N_1O_1/S_1) \rceil$
Wideband first PMI i1,2	$\lceil \log_2(N_2O_2/S_2) \rceil$	$\lceil \log_2(N_2O_2/S_2) \rceil$	$\lceil \log_2(N_2O_2/S_2) \rceil$	$\lceil \log_2(N_2O_2/S_2) \rceil$
Wideband second PMI i2	0	0	0	0

Table 5.2.2.6.2-2B-3: Fields for channel quality information feedback for higher layer configured subband CQI reports (transmission mode 9/10 configured with Class B CSI reporting with 2/4/8 antenna ports with K=1 and *PMI-Config*=1)

Field	Bit width					
	2 antenna ports		4 antenna ports			
	Rank = 1	Rank = 2	Rank = 1	Rank =2	Rank =3	Rank =4
Wideband CQI codeword 0	4	4	4	4	4	4
Subband differential CQI codeword 0	$2N$	$2N$	$2N$	$2N$	$2N$	$2N$
Wideband CQI codeword 1	0	4	0	4	4	4
Subband differential CQI codeword 1	0	$2N$	0	$2N$	$2N$	$2N$
Precoding matrix indicator	2	1	3	3	2	1

Field	Bit width				
	8 antenna ports				
	Rank = 1	Rank = 2	Rank = 3	Rank =4	Rank =5 to Rank = 8
Wideband CQI codeword 0	4	4	4	4	4
Subband differential CQI codeword 0	$2N$	$2N$	$2N$	$2N$	$2N$
Wideband CQI codeword 1	0	4	4	4	4
Subband differential CQI codeword 1	0	$2N$	$2N$	$2N$	$2N$
Precoding matrix indicator	4	4	4	3	0

Table 5.2.2.6.2-2C, Table 5.2.2.6.2-2D and Table 5.2.2.6.2-2E show the fields and the corresponding bit widths for the channel quality information feedback for higher layer configured report for PDSCH transmissions associated with transmission mode 4, transmission mode 6, transmission mode 8 configured with subband PMI/RI reporting, transmission mode 9 configured with subband PMI/RI reporting with 2/4/8 antenna ports, transmission mode 10 configured with subband PMI/RI reporting with 2/4/8 antenna ports, and transmission mode 9/10 configured with subband PMI/RI reporting with 2/4/8 antenna ports for Class B CSI reporting with K>1 and K=1 with *PMI-Config* =2. The number of CSI-RS resources K is defined in [3] and *PMI-Config* is configured by higher layers [6].

Table 5.2.2.6.2-2E-1 and Table 5.2.2.6.2-2E-2 show the fields and the corresponding bit widths for the channel quality information feedback for higher layer configured report for PDSCH transmissions associated with transmission mode 9/10 configured with subband PMI/RI reporting with 8/12/16 antenna ports for Class A CSI reporting.

Table5.2.2.6.2-2E-3 shows the fields and the corresponding bit widths for the channel quality information feedback for higher layer configured report for PDSCH transmissions associated with transmission mode 9/10 configured with subband PMI/RI reporting with 2/4/8 antenna ports for Class B CSI reporting with K=1 and *PMI-Config* =1.

For Table 5.2.2.6.2-2C, Table 5.2.2.6.2-2D, Table 5.2.2.6.2-2E, Table 5.2.2.6.2-2E-1, Table 5.2.2.6.2-2E-2 and Table 5.2.2.6.2-2E-3, N is defined in section 7.2 of [3]. For 5.2.2.6.2-2E-1 and Table 5.2.2.6.2-2E-2, the codebook configuration (N_1, N_2, O_1, O_2) is defined in [3], and *Codebook-Subset-SelectionConfig* is configured by higher layers [6]. The parameters (S_1, S_2) in rank 3 and 4 are defined as $(S_1, S_2) = (1, 1)$ for *Codebook-Subset-SelectionConfig*=1, $(S_1, S_2) = \left(\frac{O_1}{2}, \frac{O_2}{2}\right)$ for *Codebook-Subset-SelectionConfig*=2, $(S_1, S_2) = \left(O_1, \frac{O_2}{2}\right)$ for *Codebook-Subset-SelectionConfig*=3, $(S_1, S_2) = \left(O_1, \frac{O_2}{4}\right)$ for *Codebook-Subset-SelectionConfig*=4. The parameters (S_1, S_2) in rank 5 to 8 are defined as $(S_1, S_2) = (1, 1)$ for *Codebook-Subset-SelectionConfig*=1, $(S_1, S_2) = \left(\frac{O_1}{4}, \frac{O_2}{4}\right)$ for *Codebook-Subset-SelectionConfig*=2/3/4.

Samsung Exhibit 1017, Page 47 of 121

Table 5.2.2.6.2-2C: Fields for channel quality information feedback for higher layer configured subband CQI and subband PMI reports (transmission mode 4 and transmission mode 6 configured with subband PMI reporting, transmission mode 8 configured with subband PMI reporting except with *alternativeCodeBookEnabledFor4TX-r12=TRUE*, transmission mode 9 and transmission 10 configured with subband PMI reporting with 2/4 antenna ports except with *alternativeCodeBookEnabledFor4TX-r12=TRUE,* and transmission mode 9/10 configured with subband PMI/RI reporting with 2/4 antenna ports for Class B CSI reporting with K>1, and K=1 with *PMI-Config*=2, except with *alternativeCodeBookEnabledFor4TX-r12=TRUE*).

Field	Bit width					
	2 antenna ports		4 antenna ports			
	Rank = 1	Rank = 2	Rank = 1	Rank = 2	Rank = 3	Rank = 4
Wide-band CQI codeword 0	4	4	4	4	4	4
Subband differential CQI codeword 0	$2N$	$2N$	$2N$	$2N$	$2N$	$2N$
Wide-band CQI codeword 1	0	4	0	4	4	4
Subband differential CQI codeword 1	0	$2N$	0	$2N$	$2N$	$2N$
Subband precoding matrix indicator	$2N$	N	$4N$	$4N$	$4N$	$4N$

Table 5.2.2.6.2-2D: Fields for channel quality information feedback for higher layer configured subband CQI and subband PMI reports with 8 antenna ports (transmission mode 9 configured with subband PMI reporting, transmission mode 10 configured with subband PMI reporting, and transmission mode 9/10 configured with subband PMI/RI reporting for Class B CSI reporting with K>1, and K=1 with *PMI-Config*=2)

Field	Bitwidth			
	Rank = 1	Rank = 2	Rank = 3	Rank = 4
Wideband CQI codeword 0	4	4	4	4
Subband differential CQI codeword 0	$2N$	$2N$	$2N$	$2N$
Wideband CQI codeword 1	0	4	4	4
Subband differential CQI codeword 1	0	$2N$	$2N$	$2N$
Wideband first PMI i1	4	4	2	2
Subband second PMI i2	$4N$	$4N$	$4N$	$3N$
Field	**Bitwidth**			
	Rank = 5	**Rank = 6**	**Rank = 7**	**Rank = 8**
Wideband CQI codeword 0	4	4	4	4
Subband differential CQI codeword 0	$2N$	$2N$	$2N$	$2N$
Wideband CQI codeword 1	4	4	4	4
Subband differential CQI codeword 1	$2N$	$2N$	$2N$	$2N$
Wideband first PMI i1	2	2	2	0
Subband second PMI i2	0	0	0	0

Table 5.2.2.6.2-2E: Fields for channel quality information feedback for higher layer configured subband CQI and subband PMI reports with 4 antenna ports (transmission modes 8, 9 and 10 configured with subband PMI reporting, 4 antenna ports and *alternativeCodeBookEnabledFor4TX-r12=TRUE,* transmission mode 9/10 configured with subband PMI/RI reporting with 2/4 antenna ports for Class B CSI reporting with K>1, and K=1 with *PMI-Config*=2, with *alternativeCodeBookEnabledFor4TX-r12=TRUE*)

Field	Bitwidth			
	Rank = 1	Rank = 2	Rank = 3	Rank = 4

Samsung Exhibit 1017, Page 48 of 121

Wideband CQI codeword 0	4	4	4	4
Subband differential CQI codeword 0	$2N$	$2N$	$2N$	$2N$
Wideband CQI codeword 1	0	4	4	4
Subband differential CQI codeword 1	0	$2N$	$2N$	$2N$
Wideband first PMI i1	4	4	0	0
Subband second PMI i2	$4N$	$4N$	$4N$	$4N$

Table 5.2.2.6.2-2E-1: Fields for channel quality information feedback for higher layer configured subband CQI reports and subband PMI reports (transmission mode 9/10 configured with Class A CSI reporting with codebook configuration (N_1, N_2, O_1, O_2) and *Codebook-Subset-SelectionConfig*=1)

Field	Bitwidth			
	Rank = 1	Rank = 2	Rank = 3	Rank = 4
Wideband CQI codeword 0	4	4	4	4
Subband differential CQI codeword 0	$2N$	$2N$	$2N$	$2N$
Wideband CQI codeword 1	0	4	4	4
Subband differential CQI codeword 1	0	$2N$	$2N$	$2N$
Wideband first PMI i1,1	$\lceil \log_2(N_1O_1) \rceil$	$\lceil \log_2(N_1O_1) \rceil$	$\left\lceil \log_2\left(\frac{N_1O_1}{S_1}\right) \right\rceil + \left\lfloor \frac{7-N_2}{3} \right\rfloor$	$\left\lceil \log_2\left(\frac{N_1O_1}{S_1}\right) \right\rceil + \left\lfloor \frac{7-N_2}{3} \right\rfloor$
Wideband first PMI i1,2	$\lceil \log_2(N_2O_2) \rceil$	$\lceil \log_2(N_2O_2) \rceil$	$\lceil \log_2(N_2O_2) \rceil$	$\lceil \log_2(N_2O_2) \rceil$
Subband second PMI i2	$2N$	$2N$	N	N
Field	**Bitwidth**			
	Rank = 5	**Rank = 6**	**Rank = 7**	**Rank = 8**
Wideband CQI codeword 0	4	4	4	4
Subband differential CQI codeword 0	$2N$	$2N$	$2N$	$2N$
Wideband CQI codeword 1	4	4	4	4
Subband differential CQI codeword 1	$2N$	$2N$	$2N$	$2N$
Wideband first PMI i1,1	$\lceil \log_2(N_1O_1/S_1) \rceil$	$\lceil \log_2(N_1O_1/S_1) \rceil$	$\lceil \log_2(N_1O_1/S_1) \rceil$	$\lceil \log_2(N_1O_1/S_1) \rceil$
Wideband first PMI i1,2	$\lceil \log_2(N_2O_2/S_2) \rceil$	$\lceil \log_2(N_2O_2/S_2) \rceil$	$\lceil \log_2(N_2O_2/S_2) \rceil$	$\lceil \log_2(N_2O_2/S_2) \rceil$
Subband second PMI i2	0	0	0	0

Table 5.2.2.6.2-2E-2: Fields for channel quality information feedback for higher layer configured subband CQI reports and subband PMI reports (transmission mode 9/10 configured with Class A CSI reporting with codebook configuration (N_1, N_2, O_1, O_2) and *Codebook-Subset-SelectionConfig*=2/3/4)

Field	Bitwidth			
	Rank = 1	Rank = 2	Rank = 3	Rank = 4

Samsung Exhibit 1017, Page 49 of 121

Wideband CQI codeword 0	4	4	4	4
Subband differential CQI codeword 0	$2N$	$2N$	$2N$	$2N$
Wideband CQI codeword 1	0	4	4	4
Subband differential CQI codeword 1	0	$2N$	$2N$	$2N$
Wideband first PMI i1,1	$\lceil \log_2(N_1O_1/2) \rceil$	$\lceil \log_2(N_1O_1/2) \rceil$	$\left\lceil \log_2\left(\frac{N_1O_1}{S_1}\right) \right\rceil + \left\lfloor \frac{7-N_2}{3} \right\rfloor$	$\left\lceil \log_2\left(\frac{N_1O_1}{S_1}\right) \right\rceil + \left\lfloor \frac{7-N_2}{3} \right\rfloor$
Wideband first PMI i1,2	$\lceil \log_2(N_2O_2/2) \rceil$	$\lceil \log_2(N_2O_2/2) \rceil$	$\left\lceil \log_2\left(\frac{N_2O_2}{S_2}\right) \right\rceil$	$\left\lceil \log_2\left(\frac{N_2O_2}{S_2}\right) \right\rceil$
Subband second PMI i2	$4N$	$4N$	$4N$	$3N$

Field	Bitwidth			
	Rank = 5	**Rank = 6**	**Rank = 7**	**Rank = 8**
Wideband CQI codeword 0	4	4	4	4
Subband differential CQI codeword 0	$2N$	$2N$	$2N$	$2N$
Wideband CQI codeword 1	4	4	4	4
Subband differential CQI codeword 1	$2N$	$2N$	$2N$	$2N$
Wideband first PMI i1,1	$\lceil \log_2(N_1O_1/S_1) \rceil$	$\lceil \log_2(N_1O_1/S_1) \rceil$	$\lceil \log_2(N_1O_1/S_1) \rceil$	$\lceil \log_2(N_1O_1/S_1) \rceil$
Wideband first PMI i1,2	$\lceil \log_2(N_2O_2/S_2) \rceil$	$\lceil \log_2(N_2O_2/S_2) \rceil$	$\lceil \log_2(N_2O_2/S_2) \rceil$	$\lceil \log_2(N_2O_2/S_2) \rceil$
Subband second PMI i2	0	0	0	0

Table 5.2.2.6.2-2E-3: Fields for channel quality information feedback for higher layer configured subband CQI reports and subband PMI reports (transmission mode 9/10 configured with Class B CSI reporting with 2/4/8 antenna ports with K=1 and *PMI-Config*=1)

Field	Bit width					
	2 antenna ports		4 antenna ports			
	Rank = 1	Rank = 2	Rank = 1	Rank =2	Rank =3	Rank =4
Wideband CQI codeword 0	4	4	4	4	4	4
Subband differential CQI codeword 0	$2N$	$2N$	$2N$	$2N$	$2N$	$2N$
Wideband CQI codeword 1	0	4	0	4	4	4
Subband differential CQI codeword 1	0	$2N$	$2N$	$2N$	$2N$	$2N$
Precoding matrix indicator	$2N$	N	$3N$	$3N$	$2N$	N

Field	Bit width				
	8 antenna ports				
	Rank = 1	Rank = 2	Rank = 3	Rank =4	Rank = 5 to Rank = 8
Wideband CQI codeword 0	4	4	4	4	4
Subband differential CQI codeword 0	$2N$	$2N$	$2N$	$2N$	$2N$
Wideband CQI codeword 1	0	4	4	4	4
Subband differential CQI codeword 1	0	$2N$	$2N$	$2N$	$2N$
Precoding matrix indicator	$4N$	$4N$	$4N$	$3N$	0

Table 5.2.2.6.2-3 shows the fields and the corresponding bit width for the rank indication feedback for higher layer configured subband CQI reports for PDSCH transmissions associated with transmission mode 3, transmission mode 4, transmission mode 8 configured with PMI/RI reporting, transmission mode 9 configured with PMI/RI reporting with 2/4/8 antenna ports, transmission mode 10 configured with PMI/RI reporting with 2/4/8 antenna ports, and transmission mode 9/10 configured with PMI/RI reporting with 2/4/8 antenna ports for Class B CSI reporting with K=1, transmission mode 9/10 configured with PMI/RI reporting with 8/12/16 antenna ports for Class A CSI reporting, and transmission mode 9/10 configured without PMI reporting for Class B CSI reporting with K=1 with 2/4/8 antenna ports.

Table 5.2.2.6.2-3A shows the fields and the corresponding bit width for the CSI-RS resource indication feedback for higher layer configured subband CQI reports for PDSCH transmissions associated with transmission mode 9/10 configured with PMI/RI reporting for Class B CSI reporting with K>1.

Table 5.2.2.6.2-3B shows the fields and the corresponding bit width for the joint CRI and RI feedback for higher layer configured subband CQI reports for PDSCH transmissions associated with transmission mode 9/10 configured without PMI reporting for Class B CSI reporting with K>1, and transmission mode 9/10 configured with PMI/RI reporting for Class B CSI reporting with K>1 and 2/4/8 antenna ports.

Table 5.2.2.6.2-3: Fields for rank indication feedback for higher layer configured subband CQI reports (transmission mode 3, transmission mode 4, transmission mode 8 configured with PMI/RI reporting, transmission mode 9 configured with PMI/RI reporting with 2/4/8 antenna ports, transmission mode 10 configured with PMI/RI reporting with 2/4/8 antenna ports, transmission mode 9/10 configured with PMI/RI reporting with 2/4/8 antenna ports for Class B CSI reporting with K=1, transmission mode 9/10 configured with PMI/RI reporting with 8/12/16 antenna ports for Class A CSI reporting, and transmission mode 9/10 configured without PMI reporting for Class B CSI reporting with K=1 with 2/4/8 antenna ports).

Field	Bit width					
	2 antenna ports	4 antenna ports		8/12/16 antenna ports		
		Max 2 layers	Max 4 layers	Max 2 layers	Max 4 layers	Max 8 layers
Rank indication	1	1	2	1	2	3

Samsung Exhibit 1017, Page 51 of 121

Table 5.2.2.6.2-3A: Fields for CRI feedback for higher layer configured subband CQI reports (transmission mode 9/10 configured without PMI reporting for Class B CSI reporting with K>1).

Field	Bit width		
	K = 2	K = 3 and K = 4	K = 5 to K = 8
CRI	1	2	3

Table 5.2.2.6.2-3B: Fields for joint CRI and RI feedback for higher layer configured subband CQI reports (transmission mode 9/10 configured without PMI reporting for Class B CSI reporting with K>1, and transmission mode 9/10 configured with PMI/RI reporting for Class B CSI reporting with K>1 and 2/4/8 antenna ports).

Field	Bit width		
	Max 2 layers	Max 4 layers	Max 8 layers
CRI	$\lceil \log_2(K) \rceil$	$\lceil \log_2(K) \rceil$	$\lceil \log_2(K) \rceil$
Rank indication	1	2	3

The channel quality bits in Table 5.2.2.6.2-1, Table 5.2.2.6.2-2, Table 5.2.2.6.2-2A, Table 5.2.2.6.2-2B, Table 5.2.2.6.2-2C, Table 5.2.2.6.2-2D, Table 5.2.2.6.2-2E, Table 5.2.2.6.2-2B-1, Table 5.2.2.6.2-2B-2, Table 5.2.2.6.2-2B-3, Table 5.2.2.6.2-2E-1, Table 5.2.2.6.2-2E-2 and Table 5.2.2.6.2-2E-3 form the bit sequence $o_0, o_1, o_2, ..., o_{O-1}$ with o_0 corresponding to the first bit of the first field in each of the tables, o_1 corresponding to the second bit of the first field in each of the tables, and o_{O-1} corresponding to the last bit in the last field in each of the tables. The field of the PMI and subband differential CQI shall be in the increasing order of the subband index [3]. The first bit of each field corresponds to MSB and the last bit LSB. The RI bits sequence in Table 5.2.2.6.2-3, 5.2.2.6.2-3B and the CRI sequence in Table 5.2.2.6.2-3A are encoded according to section 5.2.2.6.

5.2.2.6.3 Channel quality information formats for UE selected subband CQI reports

Table 5.2.2.6.3-1 shows the fields and the corresponding bit widths for the channel quality information feedback for UE selected subband CQI for PDSCH transmissions associated with transmission mode 1, transmission mode 2, transmission mode 3, transmission mode 7, transmission mode 8 configured without PMI/RI reporting, transmission mode 9 configured without PMI/RI reporting or configured with 1 antenna port, and transmission mode 10 configured without PMI/RI reporting or configured with 1 antenna port. L in Table 5.2.2.6.3-1 is defined in section 7.2 of [3].

Table 5.2.2.6.3-1A shows the fields and the corresponding bit widths for the channel quality information feedback for UE selected subband CQI for PDSCH transmissions associated with transmission mode 9/10 configured without PMI reporting for Class B CSI reporting with 2/4/8 antenna ports.

Table 5.2.2.6.3-1: Fields for channel quality information feedback for UE selected subband CQI reports (transmission mode 1, transmission mode 2, transmission mode 3, transmission mode 7, transmission mode 8 configured without PMI/RI reporting, transmission mode 9 configured without PMI/RI reporting or configured with 1 antenna port, and transmission mode 10 configured without PMI/RI reporting or configured with 1 antenna port)

Field	Bit width
Wide-band CQI codeword	4
Subband differential CQI	2
Position of the M selected subbands	L

Samsung Exhibit 1017, Page 52 of 121

Table 5.2.2.6.3-1A Fields for channel quality information feedback for UE selected subband CQI reports (transmission mode 9/10 configured without PMI reporting for Class B CSI reporting with 2/4/8 antenna ports)

Field	Bit width	
	Rank = 1	Rank >1
Wide-band CQI codeword 0	4	4
Subband differential CQI codeword 0	2	2
Wide-band CQI codeword 1	0	4
Subband differential CQI codeword 1	0	2
Position of the M selected subbands	L	L

Table 5.2.2.6.3-2, Table 5.2.2.6.3-2A and Table 5.2.2.6.3-2B show the fields and the corresponding bit widths for the channel quality information feedback for UE selected subband CQI for PDSCH transmissions associated with transmission mode 4, transmission mode 6, transmission mode 8 configured with PMI/RI reporting, transmission mode 9 configured with PMI/RI reporting with 2/4/8 antenna port, transmission mode 10 configured with PMI/RI reporting with 2/4/8 antenna ports, and transmission mode 9/10 configured with PMI/RI reporting with 2/4/8 antenna ports for Class B CSI reporting with K>1 and K=1 with *PMI-Config* =2, where the number of CSI-RS resources K is defined in [3] and *PMI-Config* is configured by higher layers [6].

Table 5.2.2.6.3-2C and Table 5.2.2.6.3-2D show the fields and the corresponding bit widths for the channel quality information feedback for UE selected subband CQI for PDSCH transmissions associated with transmission mode 9/10 configured with PMI/RI reporting with 8/12/16 antenna ports for Class A CSI reporting.

Table 5.2.2.6.3-2E shows the fields and the corresponding bit widths for the channel quality information feedback for UE selected subband CQI for PDSCH transmissions associated with transmission mode 9/10 configured with PMI/RI reporting with 2/4/8 antenna ports for Class B CSI reporting with K=1 and *PMI-Config* =1.

For Table 5.2.2.6.3-2, Table 5.2.2.6.3-2A, Table 5.2.2.6.3-2B, Table 5.2.2.6.3-2C, Table 5.2.2.6.3-2D and Table 5.2.2.6.3-2E, L is defined in section 7.2 of [3]. For Table 5.2.2.6.3-2C and Table 5.2.2.6.3-2D, the codebook configuration (N_1, N_2, O_1, O_2) is defined in [3], and *Codebook-Subset-SelectionConfig* is configured by higher layers [6]. The parameters (S_1, S_2) in rank 3 and 4 are defined as $(S_1, S_2) = (1, 1)$ for *Codebook-Subset-SelectionConfig*=1, $(S_1, S_2) = \left(\frac{O_1}{2}, \frac{O_2}{2}\right)$ for *Codebook-Subset-SelectionConfig*=2, $(S_1, S_2) = \left(O_1, \frac{O_2}{2}\right)$ for *Codebook-Subset-SelectionConfig*=3, $(S_1, S_2) = \left(O_1, \frac{O_2}{4}\right)$ for *Codebook-Subset-SelectionConfig*=4. The parameters (S_1, S_2) in rank 5 to 8 are defined as $(S_1, S_2) = (1, 1)$ for *Codebook-Subset-SelectionConfig*=1, $(S_1, S_2) = \left(\frac{O_1}{4}, \frac{O_2}{4}\right)$ for *Codebook-Subset-SelectionConfig*=2/3/4.

Samsung Exhibit 1017, Page 53 of 121

Table 5.2.2.6.3-2: Fields for channel quality information feedback for UE selected subband CQI reports (transmission mode 4, transmission mode 6, transmission mode 8 configured with PMI/RI reporting except with *alternativeCodeBookEnabledFor4TX-r12=TRUE*, transmission mode 9 configured with PMI/RI reporting with 2/4 antenna ports except with *alternativeCodeBookEnabledFor4TX-r12=TRUE*, transmission mode 10 configured with PMI/RI reporting with 2/4 antenna ports except with *alternativeCodeBookEnabledFor4TX-r12=TRUE,* and transmission mode 9/10 configured with PMI/RI reporting with 2/4 antenna ports for Class B CSI reporting with K>1, and K=1 with *PMI-Config*=2, except with *alternativeCodeBookEnabledFor4TX-r12=TRUE*)

Field	Bit width			
	2 antenna ports		4 antenna ports	
	Rank = 1	Rank = 2	Rank = 1	Rank > 1
Wide-band CQI codeword 0	4	4	4	4
Subband differential CQI codeword 0	2	2	2	2
Wide-band CQI codeword 1	0	4	0	4
Subband differential CQI codeword 1	0	2	0	2
Position of the M selected subbands	L	L	L	L
Precoding matrix indicator	4	2	8	8

Table 5.2.2.6.3-2A: Fields for channel quality information feedback for UE selected subband CQI reports (transmission mode 9 configured with PMI/RI reporting with 8 antenna ports, transmission mode 10 configured with PMI/RI reporting with 8 antenna ports, and transmission mode 9/10 configured with PMI/RI reporting with 8 antenna ports for Class B CSI reporting with K>1, and K=1 with *PMI-Config*=2).

Field	Bit width							
	Rank = 1	Rank = 2	Rank = 3	Rank = 4	Rank = 5	Rank = 6	Rank = 7	Rank = 8
Wide-band CQI codeword 0	4	4	4	4	4	4	4	4
Subband differential CQI codeword 0	2	2	2	2	2	2	2	2
Wide-band CQI codeword 1	0	4	4	4	4	4	4	4
Subband differential CQI codeword 1	0	2	2	2	2	2	2	2
Position of the M selected subbands	L	L	L	L	L	L	L	L
Wideband first PMI i1	4	4	2	2	2	2	2	0
Wideband second PMI i2	4	4	4	3	0	0	0	0
Subband second PMI i2	4	4	4	3	0	0	0	0

Table 5.2.2.6.3-2B: Fields for channel quality information feedback for UE selected subband CQI reports with 4 antenna ports (transmission modes 8, 9 and 10 configured with PMI/RI reporting, 4 antenna ports and *alternativeCodeBookEnabledFor4TX-r12=TRUE,* and transmission mode 9/10 configured with PMI/RI reporting with 4 antenna ports for Class B CSI reporting with K>1, and K=1 with *PMI-Config*=2, with *alternativeCodeBookEnabledFor4TX-r12=TRUE*)

Field	Bit width			
	Rank = 1	Rank = 2	Rank = 3	Rank = 4
Wide-band CQI codeword 0	4	4	4	4
Subband differential CQI codeword 0	2	2	2	2
Wide-band CQI codeword 1	0	4	4	4
Subband differential CQI codeword 1	0	2	2	2
Position of the M selected subbands	L	L	L	L
Wideband first PMI i1	4	4	0	0
Wideband second PMI i2	4	4	4	4
Subband second PMI i2	4	4	4	4

Samsung Exhibit 1017, Page 54 of 121

Table 5.2.2.6.3-2C: Fields for channel quality information feedback for UE selected subband CQI reports (transmission mode 9/10 configured with PMI/RI reporting for Class A CSI reporting with codebook configuration (N_1, N_2, O_1, O_2) and *Codebook-Subset-SelectionConfig*=1)

Field	Bit width			
	Rank = 1	Rank = 2	Rank = 3	Rank = 4
Wide-band CQI codeword 0	4	4	4	4
Subband differential CQI codeword 0	2	2	2	2
Wide-band CQI codeword 1	0	4	4	4
Subband differential CQI codeword 1	0	2	2	2
Position of the M selected subbands	L	L	L	L
Wideband first PMI i1,1	$\lceil \log_2(N_1O_1) \rceil$	$\lceil \log_2(N_1O_1) \rceil$	$\left\lceil \log_2\left(\frac{N_1O_1}{S_1}\right) \right\rceil + \left\lfloor \frac{7-N_2}{3} \right\rfloor$	$\left\lceil \log_2\left(\frac{N_1O_1}{S_1}\right) \right\rceil + \left\lfloor \frac{7-N_2}{3} \right\rfloor$
Wideband first PMI i1,2	$\lceil \log_2(N_2O_2) \rceil$	$\lceil \log_2(N_2O_2) \rceil$	$\lceil \log_2(N_2O_2/S_2) \rceil$	$\lceil \log_2(N_2O_2/S_2) \rceil$
Wideband second PMI i2	2	2	1	1
Subband second PMI i2	2	2	1	1
Field	**Bit width**			
	Rank = 5	**Rank = 6**	**Rank = 7**	**Rank = 8**
Wide-band CQI codeword 0	4	4	4	4
Subband differential CQI codeword 0	2	2	2	2
Wide-band CQI codeword 1	4	4	4	4
Subband differential CQI codeword 1	2	2	2	2
Position of the M selected subbands	L	L	L	L
Wideband first PMI i1,1	$\lceil \log_2(N_1O_1/S_1) \rceil$	$\lceil \log_2(N_1O_1/S_1) \rceil$	$\lceil \log_2(N_1O_1/S_1) \rceil$	$\lceil \log_2(N_1O_1/S_1) \rceil$
Wideband first PMI i1,2	$\lceil \log_2(N_2O_2/S_2) \rceil$	$\lceil \log_2(N_2O_2/S_2) \rceil$	$\lceil \log_2(N_2O_2/S_2) \rceil$	$\lceil \log_2(N_2O_2/S_2) \rceil$
Wideband second PMI i2	0	0	0	0
Subband second PMI i2	0	0	0	0

Table 5.2.2.6.3-2D: Fields for channel quality information feedback for UE selected subband CQI reports (transmission mode 9/10 configured with PMI/RI reporting for Class A CSI reporting with codebook configuration (N_1, N_2, O_1, O_2) and *Codebook-Subset-SelectionConfig*=2/3/4)

Field	Bit width			
	Rank = 1	Rank = 2	Rank = 3	Rank = 4

Samsung Exhibit 1017, Page 55 of 121

Wide-band CQI codeword 0	4	4	4	4
Subband differential CQI codeword 0	2	2	2	2
Wide-band CQI codeword 1	0	4	4	4
Subband differential CQI codeword 1	0	2	2	2
Position of the M selected subbands	L	L	L	L
Wideband first PMI i1,1	$\lceil \log_2(N_1O_1/2) \rceil$	$\lceil \log_2(N_1O_1/2) \rceil$	$\left\lceil \log_2\left(\frac{N_1O_1}{S_1}\right) \right\rceil + \left\lfloor \frac{7-N_2}{3} \right\rfloor$	$\left\lceil \log_2\left(\frac{N_1O_1}{S_1}\right) \right\rceil + \left\lfloor \frac{7-N_2}{3} \right\rfloor$
Wideband first PMI i1,2	$\lceil \log_2(N_2O_2/2) \rceil$	$\lceil \log_2(N_2O_2/2) \rceil$	$\lceil \log_2(N_2O_2/S_2) \rceil$	$\lceil \log_2(N_2O_2/S_2) \rceil$
Wideband second PMI i2	4	4	4	3
Subband second PMI i2	4	4	4	3
Field	**Bit width**			
	Rank = 5	**Rank = 6**	**Rank = 7**	**Rank = 8**

Wide-band CQI codeword 0	4	4	4	4
Subband differential CQI codeword 0	2	2	2	2
Wide-band CQI codeword 1	4	4	4	4
Subband differential CQI codeword 1	2	2	2	2
Position of the M selected subbands	L	L	L	L
Wideband first PMI i1,1	$\lceil \log_2 (N_1 O_1 / S_1) \rceil$	$\lceil \log_2 (N_1 O_1 / S_1) \rceil$	$\lceil \log_2 (N_1 O_1 / S_1) \rceil$	$\lceil \log_2 (N_1 O_1 / S_1) \rceil$
Wideband first PMI i1,2	$\lceil \log_2 (N_2 O_2 / S_2) \rceil$	$\lceil \log_2 (N_2 O_2 / S_2) \rceil$	$\lceil \log_2 (N_2 O_2 / S_2) \rceil$	$\lceil \log_2 (N_2 O_2 / S_2) \rceil$
Wideband second PMI i2	0	0	0	0
Subband second PMI i2	0	0	0	0

Table 5.2.2.6.3-2E: Fields for channel quality information feedback for UE selected subband CQI reports (transmission mode 9/10 configured with PMI/RI reporting with 2/4/8 antenna ports for Class B CSI reporting with K=1 and *PMI-Config*=1)

Field	Bit width					
	2 antenna ports		4 antenna ports			
	Rank = 1	Rank = 2	Rank = 1	Rank =2	Rank =3	Rank =4
Wideband CQI codeword 0	4	4	4	4	4	4
Subband differential CQI codeword 0	2	2	2	2	2	2
Wideband CQI codeword 1	0	4	0	4	4	4
Subband differential CQI codeword 1	0	2	2	2	2	2
Position of the M selected subbands	L	L	L	L	L	L
Wideband Precoding matrix indicator	2	1	3	3	2	1
Subband Precoding matrix indicator	2	1	3	3	2	1

Field	Bit width				
	8 antenna ports				
	Rank = 1	Rank = 2	Rank = 3	Rank =4	Rank =5~8
Wideband CQI codeword 0	4	4	4	4	4
Subband differential CQI codeword 0	2	2	2	2	2
Wideband CQI codeword 1	0	4	4	4	4
Subband differential CQI codeword 1	0	2	2	2	2
Position of the M selected subbands	L	L	L	L	L
Wideband Precoding matrix indicator	4	4	4	3	0
Subband Precoding matrix indicator	4	4	4	3	0

Table 5.2.2.6.3-3 shows the fields and the corresponding bit widths for the rank indication feedback for UE selected subband CQI reports for PDSCH transmissions associated with transmission mode 3, transmission mode 4, transmission mode 8 configured with PMI/RI reporting, transmission mode 9 configured with PMI/RI reporting with 2/4/8 antenna

Samsung Exhibit 1017, Page 57 of 121

ports, transmission mode 10 configured with PMI/RI reporting with 2/4/8 antenna ports, and transmission mode 9/10 configured with PMI/RI reporting with 2/4/8 antenna ports for Class B CSI reporting with K=1, transmission mode 9/10 configured with PMI/RI reporting with 8/12/16 antenna ports for Class A CSI reporting, and transmission mode 9/10 configured without PMI reporting for Class B CSI reporting with K=1 with with 2/4/8 antenna ports.

Table 5.2.2.6.3-3A shows the fields and the corresponding bit widths for the CSI-RS resource indication feedback for UE selected subband CQI reports for PDSCH transmissions associated with transmission mode 9/10 configured without PMI reporting for Class B CSI reporting with K>1.

Table 5.2.2.6.3-3B shows the fields and the corresponding bit widths for the joint CRI and RI feedback for UE selected subband CQI report for PDSCH transmissions associated with transmission mode 9/10 configured without PMI reporting for Class B CSI reporting with K>1, and transmission mode 9/10 configured with PMI/RI reporting for Class B CSI reporting with K>1 and 2/4/8 antenna ports.

Table 5.2.2.6.3-3: Fields for rank indication feedback for UE selected subband CQI reports (transmission mode 3, transmission mode 4, transmission mode 8 configured with PMI/RI reporting, transmission mode 9 configured with PMI/RI reporting with 2/4/8 antenna ports and transmission mode 10 configured with PMI/RI reporting with 2/4/8 antenna ports, transmission mode 9/10 configured with PMI/RI reporting with 2/4/8 antenna ports for Class B CSI reporting with K=1, transmission mode 9/10 configured with PMI/RI reporting with 8/12/16 antenna ports for Class A CSI reporting, and transmission mode 9/10 configured without PMI reporting for Class B CSI reporting with K=1 with with 2/4/8 antenna ports).

Field	Bit width					
	2 antenna ports	4 antenna ports		8/12/16 antenna ports		
		Max 2 layers	Max 4 layers	Max 2 layers	Max 4 layers	Max 8 layers
Rank indication	1	1	2	1	2	3

Table 5.2.2.6.3-3A: Fields for CSI-RS resource indication feedback for UE selected subband CQI reports (transmission mode 9/10 configured without PMI reporting for Class B CSI reporting with K>1).

Field	Bit width		
	K = 2	K = 3 and K= 4	K = 5 to K = 8
CRI	1	2	3

Table 5.2.2.6.3-3B: Fields for joint CRI and RI feedback for UE selected subband CQI report (transmission mode 9/10 configured without PMI reporting for Class B CSI reporting with K>1, and transmission mode 9/10 configured with PMI/RI reporting for Class B CSI reporting with K>1 and 2/4/8 antenna ports).

Field	Bit width		
	Max 2 layers	Max 4 layers	Max 8 layers
CRI	$\lceil \log_2(K) \rceil$	$\lceil \log_2(K) \rceil$	$\lceil \log_2(K) \rceil$
Rank indication	1	2	3

The channel quality bits in Table 5.2.2.6.3-1, Table 5.2.2.6.3-2, Table 5.2.2.6.3-2A, Table 5.2.2.6.3-2B, Table 5.2.2.6.3-2C, Table 5.2.2.6.3-2D, and Table 5.2.2.6.3-2E form the bit sequence $o_0, o_1, o_2, ..., o_{O-1}$ with o_0 corresponding to the first bit of the first field in each of the tables, o_1 corresponding to the second bit of the first field in each of the tables, and o_{O-1} corresponding to the last bit in the last field in each of the tables. The field of PMI shall start with the wideband PMI followed by the PMI for the M selected subbands. The first bit of each field corresponds to MSB and the last bit LSB. The RI bits sequence in Table 5.2.2.6.3-3, Table 5.2.2.6.3-3B, and the CRI sequence in Table 5.2.2.6.3-3A are encoded according to section 5.2.2.6.

Samsung Exhibit 1017, Page 58 of 121

5.2.2.6.4 Channel coding for CQI/PMI information in PUSCH

The channel quality bits input to the channel coding block are denoted by $o_0, o_1, o_2, o_3, ..., o_{O-1}$ where O is the number of bits. The number of channel quality bits depends on the transmission format. When PUCCH-based reporting format is used, the number of CQI/PMI bits is defined in section 5.2.3.3.1 for wideband reports and in section 5.2.3.3.2 for UE selected subbands reports. When PUSCH-based reporting format is used, the number of CQI/PMI bits is defined in section 5.2.2.6.1 for wideband reports, in section 5.2.2.6.2 for higher layer configured subbands reports and in section 5.2.2.6.3 for UE selected subbands reports.

The channel quality information is first coded using a (32, O) block code. The code words of the (32, O) block code are a linear combination of the 11 basis sequences denoted $M_{i,n}$ and defined in Table 5.2.2.6.4-1.

Table 5.2.2.6.4-1: Basis sequences for (32, *O*) code.

i	$M_{i,0}$	$M_{i,1}$	$M_{i,2}$	$M_{i,3}$	$M_{i,4}$	$M_{i,5}$	$M_{i,6}$	$M_{i,7}$	$M_{i,8}$	$M_{i,9}$	$M_{i,10}$
0	1	1	0	0	0	0	0	0	0	0	1
1	1	1	1	0	0	0	0	0	0	1	1
2	1	0	0	1	0	0	1	0	1	1	1
3	1	0	1	1	0	0	0	0	1	0	1
4	1	1	1	1	0	0	0	1	0	0	1
5	1	1	0	0	1	0	1	1	1	0	1
6	1	0	1	0	1	0	1	0	1	1	1
7	1	0	0	1	1	0	0	1	1	0	1
8	1	1	0	1	1	0	0	1	0	1	1
9	1	0	1	1	1	0	1	0	0	1	1
10	1	0	1	0	0	1	1	1	0	1	1
11	1	1	1	0	0	1	1	0	1	0	1
12	1	0	0	1	0	1	0	1	1	1	1
13	1	1	0	1	0	1	0	1	0	1	1
14	1	0	0	0	1	1	0	1	0	0	1
15	1	1	0	0	1	1	1	1	0	1	1
16	1	1	1	0	1	1	1	0	0	1	0
17	1	0	0	1	1	1	0	0	1	0	0
18	1	1	0	1	1	1	1	1	0	0	0
19	1	0	0	0	0	1	1	0	0	0	0
20	1	0	1	0	0	0	1	0	0	0	1
21	1	1	0	1	0	0	0	0	0	1	1
22	1	0	0	0	1	0	0	1	1	0	1
23	1	1	1	0	1	0	0	0	1	1	1
24	1	1	1	1	1	0	1	1	1	1	0
25	1	1	0	0	0	1	1	1	0	0	1
26	1	0	1	1	0	1	0	0	1	1	0
27	1	1	1	1	0	1	0	1	1	1	0
28	1	0	1	0	1	1	1	0	1	0	0
29	1	0	1	1	1	1	1	1	1	0	0
30	1	1	1	1	1	1	1	1	1	1	1
31	1	0	0	0	0	0	0	0	0	0	0

The encoded CQI/PMI block is denoted by $b_0, b_1, b_2, b_3, ..., b_{B-1}$ where $B = 32$ and

$$b_i = \sum_{n=0}^{O-1} \left(o_n \cdot M_{i,n}\right) \bmod 2 \quad \text{where } i = 0, 1, 2, \ldots, B\text{-}1.$$

The output bit sequence $q_0, q_1, q_2, q_3, ..., q_{N_L \cdot Q_{CQI}-1}$ is obtained by circular repetition of the encoded CQI/PMI block as follows

$q_i = b_{(i \bmod B)}$ where $i = 0, 1, 2, \ldots, N_L \cdot Q_{CQI}$-1, where N_L is the number of layers the corresponding UL-SCH transport block is mapped onto .

Samsung Exhibit 1017, Page 59 of 121

5.2.2.6.5 Channel coding for more than 11 bits of HARQ-ACK information

The HARQ-ACK bits input to the channel coding block are denoted by $o_0^{ACK}\ o_1^{ACK},...,o_{O^{ACK}-1}^{ACK}$ where $11 < O^{ACK} \le 22$ is the number of bits.

The sequences of bits $o_0^{ACK}, o_1^{ACK}, o_2^{ACK},..., o_{\lceil O^{ACK}/2 \rceil -1}^{ACK}$ and $o_{\lceil O^{ACK}/2 \rceil}^{ACK}, o_{\lceil O^{ACK}/2 \rceil +1}^{ACK}, o_{\lceil O^{ACK}/2 \rceil +2}^{ACK},..., o_{O^{ACK}-1}^{ACK}$ are encoded as follows

$$\tilde{q}_i = \sum_{n=0}^{\lceil O^{ACK}/2 \rceil -1} \left(o_n^{ACK} \cdot M_{i,n} \right) \bmod 2$$

and

$$\tilde{\tilde{q}}_i = \sum_{n=0}^{O^{ACK} - \lceil O^{ACK}/2 \rceil -1} \left(o_{\lceil O^{ACK}/2 \rceil + n}^{ACK} \cdot M_{i,n} \right) \bmod 2$$

where i = 0, 1, 2, …, 31 and the basis sequences $M_{i,n}$ are defined in Table 5.2.2.6.4-1.

The output bit sequence $q_0^{ACK}, q_1^{ACK}, q_2^{ACK},..., q_{Q_{ACK}-1}^{ACK}$ is obtained by the concatenation and circular repetition of the bit sequences $\tilde{q}_0, \tilde{q}_1, \tilde{q}_2,..., \tilde{q}_{31}$ and $\tilde{\tilde{q}}_0, \tilde{\tilde{q}}_1, \tilde{\tilde{q}}_2,..., \tilde{\tilde{q}}_{31}$ as follows:

Set i = 0

while $i < \lceil Q'/2 \rceil \cdot Q_m$

$q_i^{ACK} = \tilde{q}_{i \bmod 32}$

$i = i + 1$

end while

Set i = 0

while $i < (Q' - \lceil Q'/2 \rceil) \cdot Q_m$

$q_{\lceil Q'/2 \rceil \cdot Q_m + i}^{ACK} = \tilde{\tilde{q}}_{i \bmod 32}$

$i = i + 1$

end while

5.2.2.7 Data and control multiplexing

The control and data multiplexing is performed such that HARQ-ACK information is present on both slots and is mapped to resources around the demodulation reference signals. In addition, the multiplexing ensures that control and data information are mapped to different modulation symbols.

The inputs to the data and control multiplexing are the coded bits of the control information denoted by $q_0, q_1, q_2, q_3,..., q_{N_L \cdot Q_{CQI}-1}$ and the coded bits of the UL-SCH denoted by $f_0, f_1, f_2, f_3,..., f_{G-1}$. The output of the data and control multiplexing operation is denoted by $\underline{g}_0, \underline{g}_1, \underline{g}_2, \underline{g}_3,..., \underline{g}_{H'-1}$, where $H = (G + N_L \cdot Q_{CQI})$ and $H' = H/(N_L \cdot Q_m)$, and where $\underline{g}_i$, $i = 0,..., H'-1$ are column vectors of length $(Q_m \cdot N_L)$. H is the total number of coded bits allocated for UL-SCH data and CQI/PMI information across the N_L transmission layers of the transport block.

Samsung Exhibit 1017, Page 60 of 121

In case where more than one UL-SCH transport block are transmitted in a subframe of an UL cell, the CQI/PMI information is multiplexed with data only on the UL-SCH transport block with highest I_{MCS} value on the initial grant. In case the two transport blocks have the same I_{MCS} value in the corresponding initial UL grant, the CQI/PMI information is multiplexed with data only on the first transport block. For that UL-SCH transport block or in the case of single transport block transmission, and assuming that N_L is the number of layers onto which the UL-SCH transport block is mapped, the control information and the data shall be multiplexed as follows:

Set i, j, k to 0

while $j < N_L \cdot Q_{CQI}$ -- first place the control information

$\underline{g}_k = [q_j \ldots q_{j+N_L \cdot Q_m - 1}]^T$

$j = j + N_L \cdot Q_m$

$k = k + 1$

end while

while $i < G$ -- then place the data

$\underline{g}_k = [f_i \ldots f_{i+Q_m \cdot N_L - 1}]^T$

$i = i + Q_m \cdot N_L$

$k = k + 1$

end while

5.2.2.8 Channel interleaver

The channel interleaver described in this section in conjunction with the resource element mapping for PUSCH in [2] implements a time-first mapping of modulation symbols onto the transmit waveform while ensuring that the HARQ-ACK and RI information are present on both slots in the subframe. HARQ-ACK information is mapped to resources around the uplink demodulation reference signals while RI information is mapped to resources around those used by HARQ-ACK.

The input to the channel interleaver are denoted by $\underline{g}_0, \underline{g}_1, \underline{g}_2, \ldots, \underline{g}_{H'-1}$, $\underline{q}_0^{RI}, \underline{q}_1^{RI}, \underline{q}_2^{RI}, \ldots, \underline{q}_{Q'_{RI}-1}^{RI}$ and $\underline{q}_0^{ACK}, \underline{q}_1^{ACK}, \underline{q}_2^{ACK}, \ldots, \underline{q}_{Q'_{ACK}-1}^{ACK}$. In case where more than one UL-SCH transport block are transmitted in a subframe of an UL cell, the HARQ-ACK and RI information are multiplexed with data on both UL-SCH transport blocks.

The number of modulation symbols per layer in the subframe is given by $H'_{total} = H' + Q'_{RI}$. The output bit sequence from the channel interleaver is derived as follows:

(1) Assign $C_{mux} = N_{\text{symb}}^{\text{PUSCH}}$ to be the number of columns of the matrix. The columns of the matrix are numbered 0, 1, 2,…, $C_{mux} - 1$ from left to right. $N_{\text{symb}}^{\text{PUSCH}}$ is determined according to section 5.2.2.6.

(2) The number of rows of the matrix is $R_{mux} = (H'_{total} \cdot Q_m \cdot N_L) / C_{mux}$ and we define $R'_{mux} = R_{mux} / (Q_m \cdot N_L)$.

The rows of the rectangular matrix are numbered 0, 1, 2,…, $R_{mux} - 1$ from top to bottom.

(3) If rank information is transmitted in this subframe, the vector sequence $\underline{q}_0^{RI}, \underline{q}_1^{RI}, \underline{q}_2^{RI}, \ldots, \underline{q}_{Q'_{RI}-1}^{RI}$ is written onto the columns indicated by Table 5.2.2.8-1, and by sets of $(Q_m \cdot N_L)$ rows starting from the last row and moving upwards according to the following pseudo-code.

Set i, j to 0.

Samsung Exhibit 1017, Page 61 of 121

Set r to $R'_{mux} - 1$

while $i < Q'_{RI}$

$c_{RI} = \text{Column Set}(j)$

$\underline{y}_{r \times C_{mux} + c_{RI}} = \underline{q}_i^{RI}$

$i = i + 1$

$r = R'_{mux} - 1 - \lfloor i/4 \rfloor$

$j = (j + 3) \bmod 4$

end while

Where ColumnSet is given in Table 5.2.2.8-1 and indexed left to right from 0 to 3.

(4) Write the input vector sequence, for $k = 0, 1, \ldots, H' - 1$, into the $(R_{mux} \times C_{mux})$ matrix by sets of $(Q_m \cdot N_L)$ rows starting with the vector $\underline{y}_0$ in column 0 and rows 0 to $(Q_m \cdot N_L - 1)$ and skipping the matrix entries that are already occupied:

$$\begin{bmatrix} \underline{y}_0 & \underline{y}_1 & \underline{y}_2 & \cdots & \underline{y}_{C_{mux}-1} \\ \underline{y}_{C_{mux}} & \underline{y}_{C_{mux}+1} & \underline{y}_{C_{mux}+2} & \cdots & \underline{y}_{2C_{mux}-1} \\ \vdots & \vdots & \vdots & \ddots & \vdots \\ \underline{y}_{(R'_{mux}-1)\times C_{mux}} & \underline{y}_{(R'_{mux}-1)\times C_{mux}+1} & \underline{y}_{(R'_{mux}-1)\times C_{mux}+2} & \cdots & \underline{y}_{(R'_{mux}\times C_{mux}-1)} \end{bmatrix}$$

The pseudocode is as follows:

Set i, k to 0.

while k < H',

if $\underline{y}_i$ is not assigned to RI symbols

$\underline{y}_i = \underline{g}_k$

k = k + 1

end if

i = i+1

end while

(5) If HARQ-ACK information is transmitted in this subframe, the vector sequence $\underline{q}_0^{ACK}, \underline{q}_1^{ACK}, \underline{q}_2^{ACK}, \ldots, \underline{q}_{Q'_{ACK}-1}^{ACK}$ is written onto the columns indicated by Table 5.2.2.8-2, and by sets of $(Q_m \cdot N_L)$ rows starting from the last row and moving upwards according to the following pseudo-code. Note that this operation overwrites some of the channel interleaver entries obtained in step (4).

Set i, j to 0.

Set r to $R'_{mux} - 1$

while $i < Q'_{ACK}$

$c_{ACK} = \text{ColumnSet}(j)$

Samsung Exhibit 1017, Page 62 of 121

$$\underline{y}_{r \times C_{mux} + c_{ACK}} = \underline{q}_i^{ACK}$$

$$i = i + 1$$

$$r = R'_{mux} - 1 - \lfloor i/4 \rfloor$$

$$j = (j + 3) \bmod 4$$

end while

Where ColumnSet is given in Table 5.2.2.8-2 and indexed left to right from 0 to 3.

(6) The output of the block interleaver is the bit sequence read out column by column from the $(R_{mux} \times C_{mux})$ matrix. The bits after channel interleaving are denoted by $h_0, h_1, h_2, ..., h_{H+N_L \cdot Q_{RI}-1}$, where N_L is the number of layers the corresponding UL-SCH transport block is mapped onto.

Table 5.2.2.8-1: Column set for Insertion of rank information.

CP configuration	Column Set
Normal	{1, 4, 7, 10}
Extended	{0, 3, 5, 8}

Table 5.2.2.8-2: Column set for Insertion of HARQ-ACK information.

CP configuration	Column Set
Normal	{2, 3, 8, 9}
Extended	{1, 2, 6, 7}

The same channel interleaver procedures for RI are applied for CRI, using CRI instead of RI in the equations.

5.2.3 Uplink control information on PUCCH

Data arrives to the coding unit in the form of indicators for measurement indication, scheduling request and HARQ acknowledgement.

Three forms of channel coding are used as shown in Figure 5.2.3-1,

- one for HARQ-ACK and for combination of HARQ-ACK and periodic CSI transmitted on PUCCH format 3, including the cases with scheduling request,
- another for the channel quality information CQI/PMI transmitted on PUCCH format 2,
- and another for combination of CQI/PMI and HARQ-ACK transmitted on PUCCH format 2/2a/2b.

A fourth form of channel coding is used as shown in Figure 5.2.3-2, for HARQ-ACK and for combination of HARQ-ACK and periodic CSI transmitted on PUCCH format 4 or PUCCH format 5 including the cases with scheduling request, or for periodic CSI transmitted on PUCCH format 4 or PUCCH format 5 including the cases with scheduling request.

Samsung Exhibit 1017, Page 63 of 121

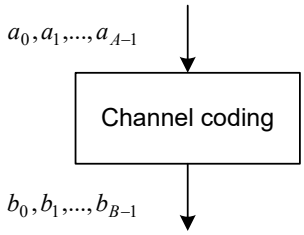

Figure 5.2.3-1: Processing for UCI.

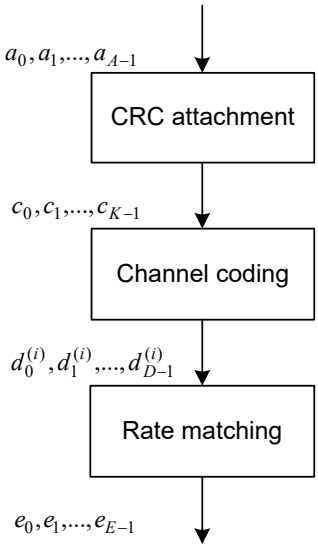

Figure 5.2.3-2: Processing for UCI.

5.2.3.1 Channel coding for UCI HARQ-ACK

The HARQ-ACK bits are received from higher layers for each subframe of each cell. Each positive acknowledgement (ACK) is encoded as a binary '1' and each negative acknowledgement (NACK) is encoded as a binary '0'. For UEs configured with no more than five DL cells, or for UEs configured by higher layers with *codebooksizeDetermination-r13 = 1*, and for the case where PUCCH format 3, PUCCH format 4 or PUCCH format 5 [2] is configured by higher layers and is used for transmission of the HARQ-ACK feedback information, the HARQ-ACK feedback consists of the concatenation of HARQ-ACK bits for each of the serving cells. For UEs configured by higher layers with *codebooksizeDetermination-r13 = 0*, the HARQ-ACK feedback consists of the HARQ-ACK bits for the serving cells depending on the Downlink Assignment Index (DAI) as in Table 5.3.3.1.1-2 and as defined in [3]. For cells configured with transmission modes 1, 2, 5, 6 or 7 [3], i.e., single codeword transmission modes, 1 bit of HARQ-ACK information, a_k, is used for that cell. For cells configured with other transmission modes, 2 bits of HARQ-ACK information are used for those cells, i.e., a_k, a_{k+1} with a_k corresponding to HARQ-ACK bit for codeword 0 and a_{k+1} corresponding to that for codeword 1.

Define O^{ACK} as the number of HARQ-ACK feedback bits and $N_{A/N}^{\text{PUCCH format 3}}$ as the number of HARQ-ACK feedback bits including the possible concurrent transmission of scheduling request and/or periodic CSI when PUCCH format 3 is used for transmission of HARQ-ACK feedback (section 10.1 in [3]), and $N_{A/N}^{\text{PUCCH format 4}}$ as the number of HARQ-ACK feedback bits including the possible concurrent transmission of scheduling request and/or periodic CSI when PUCCH format 4 is used for transmission of HARQ-ACK feedback (section 10.1 in [3]), and $N_{A/N}^{\text{PUCCH format 5}}$ as the number of HARQ-ACK feedback bits including the possible concurrent transmission of scheduling request and/or periodic CSI when PUCCH format 5 is used for transmission of HARQ-ACK feedback (section 10.1 in [3]).

Samsung Exhibit 1017, Page 64 of 121

For UEs configured by higher layers with *codebooksizeDetermination-r13 = 0*, the bit sequence $\tilde{o}_0^{ACK}, \tilde{o}_1^{ACK}, ..., \tilde{o}_{O^{ACK}-1}^{ACK}$ is determined according to the Downlink Assignment Index (DAI) as in Table 5.3.3.1.1-2 and as defined in [3]. Otherwise, the bit sequence $\tilde{o}_0^{ACK}, \tilde{o}_1^{ACK}, ..., \tilde{o}_{O^{ACK}-1}^{ACK}$ is determined as below.

For FDD, the sequence of bits $\tilde{o}_0^{ACK}, \tilde{o}_1^{ACK}, ..., \tilde{o}_{O^{ACK}-1}^{ACK}$ is the result of the concatenation of HARQ-ACK bits for different cells according to the following pseudo-code:

Set $c = 0$ – cell index: lower indices correspond to lower RRC indices of corresponding cell

Set $j = 0$ – HARQ-ACK bit index

Set N_{cells}^{DL} to the number of cells configured by higher layers for the UE

while $c < N_{cells}^{DL}$

if transmission mode configured in cell $c \in \{1,2,5,6,7\}$ -- 1 bit HARQ-ACK feedback for this cell

$\tilde{o}_j^{ACK}$ = HARQ-ACK bit of this cell

$j = j + 1$

else

if the UE is not configured with spatial bundling on PUCCH by higher layers $\tilde{o}_j^{ACK}$ = HARQ-ACK bit corresponding to the first codeword of this cell

$j = j + 1$

$\tilde{o}_j^{ACK}$ = HARQ-ACK bit corresponding to the second codeword of this cell

$j = j + 1$

else

$\tilde{o}_j^{ACK}$ = binary AND operation of the HARQ-ACK bits corresponding to the first and second codewords of this cell

$j = j + 1$

end if

end if

$c = c + 1$

end while

For the aggregation of more than one DL cell including a primary cell using FDD and at least one secondary cell using TDD, the sequence of bits $\tilde{o}_0^{ACK}, \tilde{o}_1^{ACK}, ..., \tilde{o}_{O^{ACK}-1}^{ACK}$ is the result of the concatenation of HARQ-ACK bits for different cells. Define N_{cells}^{DL} as the number of cells configured by higher layers for the UE and B_c^{DL} as the number of subframes for which the UE needs to feed back HARQ-ACK bits in UL subframe n for the *c*-th serving cell. For a cell using TDD, the subframes are determined by the DL-reference UL/DL configuration if the UE is configured with higher layer parameter *eimta-HARQ-ReferenceConfig*, and determined by the UL/DL configuration otherwise. For a cell using TDD, $B_c^{DL} = 1$ if subframe n-4 in the cell is a DL subframe or a special subframe with special subframe configurations 1/2/3/4/6/7/8/9 and normal downlink CP or a special subframe with special subframe configurations 1/2/3/5/6/7 and extended downlink CP, and $B_c^{DL} = 0$ otherwise. For a cell using FDD, $B_c^{DL} = 1$.

Samsung Exhibit 1017, Page 65 of 121

The sequence of bits $\tilde{o}_0^{ACK}, \tilde{o}_1^{ACK}, ..., \tilde{o}_{O^{ACK}-1}^{ACK}$ is performed according to the following pseudo-code:

Set $c = 0$ – cell index: lower indices correspond to lower RRC indices of corresponding cell

Set $j = 0$ – HARQ-ACK bit index

while $c < N_{cells}^{DL}$

if $B_c^{DL} = 1$

if transmission mode configured in cell $c \in \{1,2,5,6,7\}$ – 1 bit HARQ-ACK feedback for this cell

$\tilde{o}_j^{ACK}$ = HARQ-ACK bit of this cell

$j = j + 1$

else

if the UE is not configured with spatial bundling on PUCCH by higher layers $\tilde{o}_j^{ACK}$ = HARQ-ACK bit corresponding to the first codeword of this cell

$j = j + 1$

$\tilde{o}_j^{ACK}$ = HARQ-ACK bit corresponding to the second codeword of this cell

$j = j + 1$

else

$\tilde{o}_j^{ACK}$ = binary AND operation of the HARQ-ACK bits corresponding to the first and second codewords of this cell

$j = j + 1$

end if

end if

end if

$c = c + 1$

end while

For the cases with TDD primary cell, the sequence of bits $\tilde{o}_0^{ACK}, \tilde{o}_1^{ACK}, ..., \tilde{o}_{O^{ACK}-1}^{ACK}$ is obtained from the HARQ-ACK bits for different cells and different subframes.

Define N_{cells}^{DL} as the number of cells configured by higher layers for the UE and B_c^{DL} as the number of subframes for which the UE needs to feed back HARQ-ACK bits in cell c as defined in Section 7.3 of [3].

The number of HARQ-ACK bits k and the number of HARQ-ACK bits after spatial bundling k_b are computed as follows:

Set $k = 0$ – counter of HARQ-ACK bits

Set $k_b = 0$ – counter of HARQ-ACK bits after spatial bundling

Set $c = 0$ – cell index: lower indices correspond to lower RRC indices of corresponding cell

while c < N_{cells}^{DL}

Samsung Exhibit 1017, Page 66 of 121

```
    set l = 0;
    while l < B_c^DL
        if transmission mode configured in cell c ∈ {1,2,5,6,7}  -- 1 bit HARQ-ACK feedback for this cell
            k = k + 1
            k_b = k_b + 1
        else
            k = k + 2
            k_b = k_b + 1
        end if
        l = l+1
    end while
    c = c + 1
end while
```

In case the transmission of HARQ-ACK feedback using PUCCH format 3, PUCCH format 4 or PUCCH format 5 coincides with a sub-frame configured to the UE by higher layers for transmission of scheduling request, the number of scheduling request bit O^{SR} is 1; otherwise O^{SR}=0.

In case the transmission of HARQ-ACK feedback using PUCCH format 3, PUCCH format 4 or PUCCH format 5 coincides with a sub-frame configured to the UE by higher layers for transmission of periodic CSI, O^{CSI} is the number of periodic CSI bit(s) for the CSI report as defined in section 7.2.2 [3]; otherwise O^{CSI}=0.

For PUCCH format 3, the number of HARQ-ACK feedback bits O^{ACK} is computed as follows:
Set $k_{\max} = 20$ when TDD is used in all the configured serving cell(s) of the UE and $k_{\max} = 21$ when FDD is used in at least one of the configured serving cells with TDD primary cell.

If $k \le k_{\max}$ and $O^{\mathrm{CSI}} = 0$, or if $k + O^{\mathrm{CSI}} + O^{SR} \le 22$ and $O^{\mathrm{CSI}} > 0$, or if $k_b + O^{\mathrm{CSI}} + O^{SR} > 22$ and $k \le k_{\max}$, then

- $O^{ACK} = k$

else,

- $O^{ACK} = k_b$.

For PUCCH format 4 or PUCCH format 5, $O^{ACK} = k$ if the UE is not configured with spatial bundling on PUCCH by higher layers; otherwise $O^{ACK} = k_b$.

If $O^{ACK} = k$, the multiplexing of HARQ-ACK bits is performed according to the following pseudo-code:

```
Set c = 0 – cell index: lower indices correspond to lower RRC indices of corresponding cell
Set j = 0 – HARQ-ACK bit index
while c < N_cells^DL
    set l = 0;
    while l < B_c^DL
```

if transmission mode configured in cell $c \in \{1,2,5,6,7\}$ -- 1 bit HARQ-ACK feedback for this cell

$\tilde{o}_j^{ACK} = o_{c,l}^{ACK}$ HARQ-ACK bit of this cell as defined in Section 7.3 of [3]

$j = j + 1$

else

$[\tilde{o}_j^{ACK}, \tilde{o}_{j+1}^{ACK}] = [o_{c,2l}^{ACK}, o_{c,2l+1}^{ACK}]$ HARQ-ACK bit of this cell as defined in Section 7.3 of [3]

$j = j + 2$

end if

$l = l+1$

end while

$c = c + 1$

end while

If $O^{ACK} = k_b$, spatial bundling is applied to all subframes in all cells and the multiplexing of HARQ-ACK bits is performed according to the following pseudo-code

Set $c = 0$ – cell index: lower indices correspond to lower RRC indices of corresponding cell

Set $j = 0$ – HARQ-ACK bit index

while c < N_{cells}^{DL}

set $l = 0$;

while $l <$ B_c^{DL}

if transmission mode configured in cell $c \in \{1,2,5,6,7\}$ – 1 bit HARQ-ACK feedback for this cell

$\tilde{o}_j^{ACK} = o_{c,l}^{ACK}$ HARQ-ACK bit of this cell as defined in Section 7.3 of [3]

$j = j + 1$

else

$\tilde{o}_j^{ACK} = o_{c,l}^{ACK}$ binary AND operation of the HARQ-ACK bits corresponding to the first and second codewords of this cell as defined in Section 7.3 of [3]

$j = j + 1$

end if

$l = l+1$

end while

$c = c + 1$

end while

In case the transmission of HARQ-ACK feedback using PUCCH format 3, PUCCH format 4 or PUCCH format 5 [2] coincides with a sub-frame configured to the UE by higher layers for transmission of scheduling request, the scheduling request bit (1 = positive SR; 0 = negative SR) is appended at the end of the sequence of concatenated HARQ-ACK bits.

Samsung Exhibit 1017, Page 68 of 121

In case the transmission of HARQ-ACK feedback using PUCCH format 3, PUCCH format 4 or PUCCH format 5 [2] coincides with a sub-frame configured to the UE by higher layers for transmission of periodic CSI, and periodic CSI is not dropped as defined in section 7.3.2 and section 10.1.1 of [3], the periodic CSI bits for the CSI report as defined in section 7.2.2 [3] are appended at the end of the sequence of concatenated HARQ-ACK bits and scheduling request bit (if any), where in case of CSI report for more than one DL cell, the CSI report for each DL cell is appended in increasing order of cell index. As with the transmission of the scheduling request, the procedure above is used with $N_{A/N}^{\text{PUCCH format 3}}$, $N_{A/N}^{\text{PUCCH format 4}}$ or $N_{A/N}^{\text{PUCCH format 5}}$ including the number of periodic CSI bits and scheduling request bit (if any).

For $N_{A/N}^{\text{PUCCH format 3}} \le 11$, the bit sequence $a_0, a_1, a_2, ..., a_{N_{A/N}^{\text{PUCCH format 3}}-1}$ is obtained by setting $a_i = \tilde{o}_i^{ACK}$.

For $11 < N_{A/N}^{\text{PUCCH format 3}} \le 22$, the bit sequence $a_0, a_1, a_2, ..., a_{N_{A/N}^{\text{PUCCH format 3}}-1}$ is obtained by setting $a_{i/2} = \tilde{o}_i^{ACK}$ if i is even and $a_{\lceil N_{A/N}^{PUCCHformat3}/2 \rceil + (i-1)/2} = \tilde{o}_i^{ACK}$ if i is odd.

For $N_{A/N}^{\text{PUCCH format 3}} \le 11$, the sequence of bits $a_0, a_1, a_2, ..., a_{N_{A/N}^{\text{PUCCH format 3}}-1}$ is encoded as follows

$$\tilde{b}_i = \sum_{n=0}^{N_{A/N}^{\text{PUCCH format 3}}-1} \left(a_n \cdot M_{i,n}\right) \bmod 2$$

where i = 0, 1, 2, …, 31 and the basis sequences $M_{i,n}$ are defined in Table 5.2.2.6.4-1.

The output bit sequence $b_0, b_1, b_2, ..., b_{B-1}$ is obtained by circular repetition of the sequence $\tilde{b}_0, \tilde{b}_1, \tilde{b}_2, ..., \tilde{b}_{31}$

$$b_i = \tilde{b}_{(i \bmod 32)}$$

where i = 0, 1, 2, …, B-1 and where $B = 4 \cdot N_{\text{sc}}^{\text{RB}}$.

For $11 < N_{A/N}^{\text{PUCCH format 3}} \le 22$, the sequences of bits $a_0, a_1, a_2, ..., a_{\lceil N_{A/N}^{\text{PUCCH format 3}}/2 \rceil - 1}$ and $a_{\lceil N_{A/N}^{\text{PUCCH format 3}}/2 \rceil}, a_{\lceil N_{A/N}^{\text{PUCCH format 3}}/2 \rceil + 1}, a_{\lceil N_{A/N}^{\text{PUCCH format 3}}/2 \rceil + 2}, ..., a_{N_{A/N}^{\text{PUCCH format 3}}-1}$ are encoded as follows

$$\tilde{b}_i = \sum_{n=0}^{\lceil N_{A/N}^{\text{PUCCH format 3}}/2 \rceil - 1} \left(a_n \cdot M_{i,n}\right) \bmod 2$$

and

$$\tilde{\tilde{b}}_i = \sum_{n=0}^{N_{A/N}^{\text{PUCCH format 3}} - \lceil N_{A/N}^{\text{PUCCH format 3}}/2 \rceil - 1} \left(a_{\lceil N_{A/N}^{\text{PUCCH format 3}}/2 \rceil + n} \cdot M_{i,n}\right) \bmod 2$$

where i = 0, 1, 2, …, 23 and the basis sequences $M_{i,n}$ are defined in Table 5.2.2.6.4-1.

The output bit sequence $b_0, b_1, b_2, ..., b_{B-1}$ where $B = 4 \cdot N_{\text{sc}}^{\text{RB}}$ is obtained by the alternate concatenation of the bit sequences $\tilde{b}_0, \tilde{b}_1, \tilde{b}_2, ..., \tilde{b}_{23}$ and $\tilde{\tilde{b}}_0, \tilde{\tilde{b}}_1, \tilde{\tilde{b}}_2, ..., \tilde{\tilde{b}}_{23}$ as follows

Set $i, j = 0$

while $i < 4 \cdot N_{\text{sc}}^{\text{RB}}$

$$b_i = \tilde{b}_j, \; b_{i+1} = \tilde{b}_{j+1}$$

Samsung Exhibit 1017, Page 69 of 121

$b_{i+2} = \tilde{\tilde{b}}_j$, $b_{i+3} = \tilde{\tilde{b}}_{j+1}$

$i = i + 4$

$j = j + 2$

end while

For $N_{A/N}^{\text{PUCCH format 4}} > 22$, the bit sequence $a_0, a_1, a_2, ..., a_{N_{A/N}^{\text{PUCCH format 4}}-1}$ is obtained by setting $a_i = \tilde{o}_i^{ACK}$, and the output bit sequence after the rate matching is denoted by $e_0, e_1, e_2, ..., e_{E-1}$, where $E = Q_m \cdot M_{RB}^{PUCCH4} \cdot N_{symb}^{PUSCH} \cdot N_{sc}^{RB}$, Q_m is the modulation order of the PUCCH format 4, N_{symb}^{PUSCH} is determined according to section 5.2.4.1, and M_{RB}^{PUCCH4} represents the bandwidth of the PUCCH format 4 in terms of resource blocks [2]. The CRC attachment, channel coding and rate matching are performed according to sections 5.1.1 by setting *L* to 8 bits, 5.1.3.1 and 5.1.4.2, respectively. The input bit sequence to the CRC attachment operation is $a_0, a_1, a_2, ..., a_{N_{A/N}^{\text{PUCCH format 4}}-1}$. The output bit sequence of the CRC attachment operation is the input bit sequence to the channel coding operation. The output bit sequence of the channel coding operation is the input bit sequence to the rate matching operation.

For $N_{A/N}^{\text{PUCCH format 5}} > 22$, the bit sequence $a_0, a_1, a_2, ..., a_{N_{A/N}^{\text{PUCCH format 5}}-1}$ is obtained by setting $a_i = \tilde{o}_i^{ACK}$, and the output bit sequence after the rate matching is denoted by $e_0, e_1, e_2, ..., e_{E-1}$, where $E = Q_m \cdot N_{symb}^{PUSCH} \cdot N_{sc}^{RB} / 2$, Q_m is the modulation order of the PUCCH format 5 and N_{symb}^{PUSCH} is determined according to section 5.2.4.1. The CRC attachment, channel coding and rate matching are performed according to sections 5.1.1 by setting *L* to 8 bits, 5.1.3.1 and 5.1.4.2, respectively. The input bit sequence to the CRC attachment operation is $a_0, a_1, a_2, ..., a_{N_{A/N}^{\text{PUCCH format 5}}-1}$. The output bit sequence of the CRC attachment operation is the input bit sequence to the channel coding operation. The output bit sequence of the channel coding operation is the input bit sequence to the rate matching operation.

When PUCCH format 3, PUCCH format 4 or PUCCH format 5 is not used for transmission of HARQ-ACK feedback, the HARQ-ACK bits are processed for transmission according to section 10.1 in [3].

5.2.3.2 Channel coding for UCI scheduling request

The scheduling request indication is received from higher layers and is processed according to [2].

5.2.3.3 Channel coding for UCI channel quality information

The channel quality and possible concurrent scheduling request bits input to the channel coding block are denoted by $a_0, a_1, a_2, a_3, ..., a_{A-1}$ where *A* is the number of bits. The number of channel quality bits depends on the transmission format as indicated in section 5.2.3.3.1 for wideband reports and in section 5.2.3.3.2 for UE-selected subbands reports.

For PUCCH format 2, the channel quality information is coded using a (20, *A*) code. The code words of the (20, *A*) code are a linear combination of the 13 basis sequences denoted $M_{i,n}$ and defined in Table 5.2.3.3-1.

Samsung Exhibit 1017, Page 70 of 121

Table 5.2.3.3-1: Basis sequences for (20, *A*) code.

i	$M_{i,0}$	$M_{i,1}$	$M_{i,2}$	$M_{i,3}$	$M_{i,4}$	$M_{i,5}$	$M_{i,6}$	$M_{i,7}$	$M_{i,8}$	$M_{i,9}$	$M_{i,10}$	$M_{i,11}$	$M_{i,12}$
0	1	1	0	0	0	0	0	0	0	0	1	1	0
1	1	1	1	0	0	0	0	0	0	1	1	1	0
2	1	0	0	1	0	0	1	0	1	1	1	1	1
3	1	0	1	1	0	0	0	0	1	0	1	1	1
4	1	1	1	1	0	0	0	1	0	0	1	1	1
5	1	1	0	0	1	0	1	1	1	0	1	1	1
6	1	0	1	0	1	0	1	0	1	1	1	1	1
7	1	0	0	1	1	0	0	1	1	0	1	1	1
8	1	1	0	1	1	0	0	1	0	1	1	1	1
9	1	0	1	1	1	0	1	0	0	1	1	1	1
10	1	0	1	0	0	1	1	1	0	1	1	1	1
11	1	1	1	0	0	1	1	0	1	0	1	1	1
12	1	0	0	1	0	1	0	1	1	1	1	1	1
13	1	1	0	1	0	1	0	1	0	1	1	1	1
14	1	0	0	0	1	1	0	1	0	0	1	0	1
15	1	1	0	0	1	1	1	1	0	1	1	0	1
16	1	1	1	0	1	1	1	0	0	1	0	1	1
17	1	0	0	1	1	1	0	0	1	0	0	1	1
18	1	1	0	1	1	1	1	1	0	0	0	0	0
19	1	0	0	0	0	1	1	0	0	0	0	0	0

After encoding the bits are denoted by $b_0, b_1, b_2, b_3, ..., b_{B-1}$ where $B = 20$ and with

$$b_i = \sum_{n=0}^{A-1} \left(a_n \cdot M_{i,n}\right) \bmod 2 \text{ where } i = 0, 1, 2, \ldots, B\text{-}1.$$

For PUCCH format 4, the output bit sequence after the rate matching is denoted by $e_0, e_1, e_2, ..., e_{E-1}$, where $E = Q_m \cdot M_{RB}^{PUCCH4} \cdot N_{symb}^{PUSCH} \cdot N_{sc}^{RB}$, Q_m is the modulation order of the PUCCH format 4, N_{symb}^{PUSCH} is determined according to section 5.2.4.1, and M_{RB}^{PUCCH4} represents the bandwidth of the PUCCH format 4 in terms of resource blocks [2]. The CRC attachment, channel coding and rate matching are performed according to sections 5.1.1 by setting *L* to 8 bits, 5.1.3.1 and 5.1.4.2, respectively. The input bit sequence to the CRC attachment operation is $a_0, a_1, a_2, ..., a_{A-1}$. The output bit sequence of the CRC attachment operation is the input bit sequence to the channel coding operation. The output bit sequence of the channel coding operation is the input bit sequence to the rate matching operation.

For PUCCH format 5, the output bit sequence after the rate matching is denoted by $e_0, e_1, e_2, ..., e_{E-1}$, where $E = Q_m \cdot N_{symb}^{PUSCH} \cdot N_{sc}^{RB} / 2$, Q_m is the modulation order of the PUCCH format 5 and N_{symb}^{PUSCH} is determined according to section 5.2.4.1. The CRC attachment, channel coding and rate matching are performed according to sections 5.1.1 by setting *L* to 8 bits, 5.1.3.1 and 5.1.4.2, respectively. The input bit sequence to the CRC attachment operation is $a_0, a_1, a_2, ..., a_{A-1}$. The output bit sequence of the CRC attachment operation is the input bit sequence to the channel coding operation. The output bit sequence of the channel coding operation is the input bit sequence to the rate matching operation.

5.2.3.3.1 Channel quality information formats for wideband reports

Table 5.2.3.3.1-1 shows the fields and the corresponding bit widths for the channel quality information feedback for wideband reports for PDSCH transmissions associated with a transmission mode 1, transmission mode 2, transmission mode 3, transmission mode 7, transmission mode 8 configured without PMI/RI reporting, transmission mode 9 configured without PMI/RI reporting or configured with 1 antenna port, transmission mode 10 configured without PMI/RI reporting or configured with 1 antenna port, and transmission mode 9/10 configured without PMI with Class B CSI reporting.

Samsung Exhibit 1017, Page 71 of 121

Table 5.2.3.3.1-1A shows the fields and the corresponding bit widths for the channel quality information feedback for wideband reports for PDSCH transmissions associated with transmission mode 9/10 configured without PMI reporting for Class B CSI reporting with 2/4/8 antenna ports.

Table 5.2.3.3.1-1: UCI fields for channel quality information feedback for wideband CQI reports (transmission mode 1, transmission mode 2, transmission mode 3, transmission mode 7, transmission mode 8 configured without PMI/RI reporting, transmission mode 9 configured without PMI/RI reporting or configured with 1 antenna port, transmission mode 10 configured without PMI/RI reporting or configured with 1 antenna port, and transmission mode 9/10 configured without PMI with Class B CSI reporting).

Field	Bit width
Wide-band CQI	4

Table 5.2.3.3.1-1A: UCI fields for channel quality information feedback for wideband CQI reports (transmission mode 9/10 configured without PMI reporting for Class B CSI reporting with 2/4/8 antenna ports)

Field	Bit width	
	Rank = 1	Rank > 1
Wide-band CQI	4	4
Spatial differential CQI	0	3

Table 5.2.3.3.1-2 shows the fields and the corresponding bit widths for the channel quality and precoding matrix information feedback for wideband reports for PDSCH transmissions associated with transmission mode 4, transmission mode 5, transmission mode 6, and transmission mode 8 configured with PMI/RI reporting except with *alternativeCodeBookEnabledFor4TX-r12=TRUE*.

Table 5.2.3.3.1-2: UCI fields for channel quality information feedback for wideband CQI reports (transmission mode 4, transmission mode 5, transmission mode 6, and transmission mode 8 configured with PMI/RI reporting except with *alternativeCodeBookEnabledFor4TX-r12=TRUE*)

Field	Bit width			
	2 antenna ports		4 antenna ports	
	Rank = 1	Rank = 2	Rank = 1	Rank > 1
Wide-band CQI	4	4	4	4
Spatial differential CQI	0	3	0	3
Precoding matrix indicator	2	1	4	4

Table 5.2.3.3.1-2A and Table 5.2.3.3.1-2B show the fields and the corresponding bit widths for the channel quality and precoding matrix information feedback for wideband reports for PDSCH transmissions associated with transmission mode 9 configured with PMI/RI reporting except with *alternativeCodeBookEnabledFor4TX-r12=TRUE*, and transmission mode 10 configured with PMI/RI reporting except with *alternativeCodeBookEnabledFor4TX-r12=TRUE*, and transmission mode 9/10 configured with PMI/RI reporting with 2/4/8 antenna ports for Class B CSI reporting with K=1 and *PMI-Config* =2, K>1, except with *alternativeCodeBookEnabledFor4TX-r12=TRUE*. The number of CSI-RS resources K is defined in [3] and *PMI-Config* is configured by higher layers [6].

Table 5.2.3.3.1-2A-1and Table 5.2.3.3.1-2A-2 show the fields and the corresponding bit widths for the channel quality and precoding matrix information feedback for wideband reports for PDSCH transmissions associated with transmission mode 9 /10 configured with PMI/RI reporting with Class A CSI reporting.

Samsung Exhibit 1017, Page 72 of 121

Table 5.2.3.3.1-2A: UCI fields for transmission of wideband CQI and precoding information (i2) (transmission mode 9 configured with PMI/RI reporting except with *alternativeCodeBookEnabledFor4TX-r12=TRUE*, and transmission mode 10 configured with PMI/RI reporting except with *alternativeCodeBookEnabledFor4TX-r12=TRUE,* and transmission mode 9/10 configured with PMI/RI reporting with 2/4/8 antenna ports for Class B CSI reporting with K=1 and *PMI-Config*=2, K>1, except with *alternativeCodeBookEnabledFor4TX-r12=TRUE*)

Field	Bit width							
	2 antenna ports		4 antenna ports		8 antenna ports			
	Rank = 1	Rank = 2	Rank = 1	Rank > 1	Rank = 1	Rank = 2,3	Rank = 4	Rank > 4
Wide-band CQI	4	4	4	4	4	4	4	4
Spatial differential CQI	0	3	0	3	0	3	3	3
Wide-band PMI (2 or 4 antenna ports) or i2 (8 antenna ports)	2	1	4	4	4	4	3	0

Table 5.2.3.3.1-2A-1: UCI fields for transmission of wideband CQI and precoding information (i2) (transmission mode 9/10 configured PMI/RI with Class A CSI reporting and with codebook configuration (N_1, N_2, O_1, O_2), and *Codebook-Subset-SelectionConfig*=1)

Field	Bit width							
	8/12/16 antenna ports							
	Rank = 1	Rank = 2	Rank = 3	Rank = 4	Rank = 5	Rank = 6	Rank = 7	Rank = 8
Wide-band CQI	4	4	4	4	4	4	4	4
Spatial differential CQI	0	3	3	3	3	3	3	3
Wide-band i2	2	2	1	1	0	0	0	0

Table 5.2.3.3.1-2A-2: UCI fields for transmission of wideband CQI and precoding information (i2) (transmission mode 9/10 configured PMI/RI with Class A CSI reporting and with codebook configuration (N_1, N_2, O_1, O_2), and *Codebook-Subset-SelectionConfig*=2/3/4)

Field	Bit width							
	8/12/16 antenna ports							
	Rank = 1	Rank = 2	Rank = 3	Rank = 4	Rank = 5	Rank = 6	Rank = 7	Rank = 8
Wide-band CQI	4	4	4	4	4	4	4	4
Spatial differential CQI	0	3	3	3	3	3	3	3
Wide-band i2	4	4	4	3	0	0	0	0

Table 5.2.3.3.1-2B: UCI fields for transmission of wideband CQI and precoding information (i1, i2) for transmission mode 9 configured with PMI/RI reporting with 8 antenna ports, transmission mode 10 configured with PMI/RI reporting with 8 antenna ports, and transmission mode 9/10 configured with PMI/RI reporting with 8 antenna ports for Class B CSI reporting with K=1 and *PMI-Config*=2, K>1

Field	Bit width							
	8 antenna ports							
	Rank = 1	Rank = 2	Rank = 3	Rank =4	Rank = 5	Rank = 6	Rank = 7	Rank = 8
Wide-band CQI	4	4	4	4	4	4	4	4
Spatial differential CQI	0	3	3	3	3	3	3	3
i1	3	3	1	1	2	2	2	0
Wide-band i2	1	1	3	3	0	0	0	0

Table 5.2.3.3.1-2C and Table 5.2.3.3.1-2D show the fields and the corresponding bit widths for the channel quality and precoding matrix information feedback for wideband reports for PDSCH transmissions for 4 antenna ports associated with transmission modes 8, 9 and 10 configured with PMI/RI reporting and *alternativeCodeBookEnabledFor4TX-r12=TRUE*, and transmission mode 9/10 configured with PMI/RI reporting for Class B CSI reporting with 4 antenna ports with K=1 and *PMI-Config* =2, K>1, and *alternativeCodeBookEnabledFor4TX-r12=TRUE*.

Table 5.2.3.3.1-2E shows the fields and the corresponding bit widths for the channel quality and precoding matrix information feedback for wideband reports for PDSCH transmissions associated with transmission mode 9/10 configured with PMI/RI reporting with 2/4/8 antenna ports for Class B CSI reporting with K=1 and *PMI-Config* =1.

Table 5.2.3.3.1-2C: UCI fields for transmission of wideband CQI and precoding information (i2) with 4 antenna ports (transmission modes 8, 9 and 10 configured with PMI/RI reporting, 4 antenna ports and *alternativeCodeBookEnabledFor4TX-r12=TRUE,* and transmission mode 9/10 configured with 4 antenna ports for Class B CSI reporting with K=1 with *PMI-Config*=2, K>1, and *alternativeCodeBookEnabledFor4TX-r12=TRUE*))

Field	Bit width			
	4 antenna ports			
	Rank = 1	Rank = 2	Rank = 3	Rank = 4
Wide-band CQI	4	4	4	4
Spatial differential CQI	0	3	3	3
Wideband i2	4	4	4	4

Table 5.2.3.3.1-2D: UCI fields for transmission of wideband CQI and precoding information (i1, i2) with 4 antenna ports (transmission modes 8, 9 and 10 configured with PMI/RI reporting, 4 antenna ports and *alternativeCodeBookEnabledFor4TX-r12=TRUE,* and transmission mode 9/10 configured with 4 antenna ports for Class B CSI reporting with K=1 and *PMI-Config*=2, K>1, and *alternativeCodeBookEnabledFor4TX-r12=TRUE*)

Field	Bit width			
	4 antenna ports			
	Rank = 1	Rank = 2	Rank = 3	Rank = 4
Wide-band CQI	4	4	4	4
Spatial differential CQI	0	3	3	3
i1	2	2	0	0
Wideband i2	2	2	4	4

Table 5.2.3.3.1-2E: UCI fields for transmission of wideband CQI and precoding information (transmission mode 9/10 configured with PMI/RI reporting with 2/4/8 antenna ports for Class B CSI reporting with K=1 and *PMI-Config*=1)

Field	Bit width					
	2 antenna ports		4 antenna ports			
	Rank = 1	Rank = 2	Rank = 1	Rank = 2	Rank = 3	Rank = 4
Wide-band CQI	4	4	4	4	4	4
Spatial differential CQI	0	3	0	3	3	3
Wide-band PMI	2	1	3	3	2	1
Field	**Bit width**					
	8 antenna ports					
	Rank = 1	**Rank = 2**	**Rank = 3**	**Rank = 4**	**Rank = 5 to Rank = 8**	
Wide-band CQI	4	4	4	4	4	
Spatial differential CQI	0	3	3	3	3	
Wide-band PMI	4	4	4	3	0	

Table 5.2.3.3.1-3 shows the fields and the corresponding bit widths for the rank indication feedback for wideband reports for PDSCH transmissions associated with transmission mode 3, transmission mode 4, transmission mode 8 configured with PMI/RI reporting, transmission mode 9 configured with PMI/RI reporting with 2/4/8 antenna ports, transmission mode 10 configured with PMI/RI reporting with 2/4/8 antenna ports, transmission mode 9/10 configured with PMI/RI reporting with 2/4/8 antenna ports for Class B CSI reporting , transmission mode 9/10 configured with PMI/RI reporting with 8/12/16 antenna ports for Class A CSI reporting, and transmission mode 9/10 configured without PMI reporting for Class B CSI reporting with 2/4/8 antenna ports.

Samsung Exhibit 1017, Page 74 of 121

Table 5.2.3.3.1-3: UCI fields for rank indication feedback for wideband reports (transmission mode 3, transmission mode 4, transmission mode 8 configured with PMI/RI reporting, transmission mode 9 configured with PMI/RI reporting with 2/4/8 antenna ports, transmission mode 10 configured with PMI/RI reporting with 2/4/8 antenna ports, transmission mode 9/10 configured with PMI/RI reporting with 2/4/8 antenna ports for Class B CSI reporting, transmission mode 9/10 configured with PMI/RI reporting with 8/12/16 antenna ports for Class A CSI reporting, and transmission mode 9/10 configured without PMI reporting for Class B CSI reporting with 2/4/8 antenna ports).

Field	Bit width					
	2 antenna ports	4 antenna ports		8/12/16 antenna ports		
		Max 2 layers	Max 4 layers	Max 2 layers	Max 4 layers	Max 8 layers
Rank indication	1	1	2	1	2	3

Table 5.2.3.3.1-3A shows the fields and the corresponding bit widths for the joint transmission of rank indication and i1 for wideband reports for PDSCH transmissions associated with transmission mode 9 and transmission mode 10, and transmission mode 9/10 configured with 2/4/8 antenna ports for Class B CSI reporting with K=1 and *PMI-Config=2,* and K>1, except with *alternativeCodeBookEnabledFor4TX-r12 =TRUE*.

Table 5.2.3.3.1-3A: UCI fields for joint report of RI and i1 (transmission mode 9 configured with PMI/RI reporting with 2/4/8 antenna ports except with *alternativeCodeBookEnabledFor4TX-r12 =TRUE* and transmission mode 10 configured with PMI/RI reporting with 2/4/8 antenna ports except with *alternativeCodeBookEnabledFor4TX-r12 =TRUE,* and transmission mode 9/10 configured with 2/4/8 antenna ports for Class B CSI reporting with K=1 and *PMI-Config=2,* and K>1, except with *alternativeCodeBookEnabledFor4TX-r12 =TRUE*)

Field	Bit width					
	2 antenna ports	4 antenna ports		8 antenna ports		
		Max 2 layers	Max 4 layers	Max 2 layers	Max 4 layers	Max 8 layers
Rank indication	1	1	2	4	5	5
i1	-	-	-			

Table 5.2.3.3.1-3B shows the fields and the corresponding bit widths for the joint transmission of rank indication and i1 for wideband reports for PDSCH transmissions associated with transmission modes 8, 9 and 10 configured with PMI/RI reporting with 4 antenna ports and *alternativeCodeBookEnabledFor4TX-r12 =TRUE*, and transmission mode 9/10 configured with 4 antenna ports for Class B CSI reporting with K=1 and *PMI-Config=2,* and K>1, with *alternativeCodeBookEnabledFor4TX-r12 =TRUE.*.

Table 5.2.3.3.1-3B: UCI fields for joint report of RI and i1 with 4 antenna ports (transmission modes 8, 9 and 10 configured with PMI/RI reporting, 4 antenna ports and *alternativeCodeBookEnabledFor4TX-r12=TRUE,* and transmission mode 9/10 configured with 4 antenna ports for Class B CSI reporting with K=1 and *PMI-Config=2,* and K>1, with *alternativeCodeBookEnabledFor4TX-r12 =TRUE*)

Field	Bit width	
	4 antenna ports	
	Max 2 layers	Max 4 layers
Rank indication and i1	4	5

Table 5.2.3.3.1-3C shows the fields and the corresponding bit widths for the joint report of CRI and rank indication feedback for wideband reports for PDSCH transmissions associated with transmission mode 9/10 configured with PMI/RI reporting for Class B CSI reporting with K>1, and transmission mode 9/10 configured without PMI reporting for Class B CSI reporting with K>1.

Samsung Exhibit 1017, Page 75 of 121

Table 5.2.3.3.1-3C: UCI fields for joint report of CRI and rank indication feedback for wideband reports (transmission mode 9/10 configured with PMI/RI reporting for Class B CSI reporting with K>1, and transmission mode 9/10 configured without PMI reporting for Class B CSI reporting with K>1).

Field	Bit width		
	Max 2 layers	Max 4 layers	Max 8 layers
CRI	$\lceil \log_2(K) \rceil$	$\lceil \log_2(K) \rceil$	$\lceil \log_2(K) \rceil$
Rank indication	1	2	3

Table 5.2.3.3.1-3D shows the fields and the corresponding bit widths for the joint report of CRI , rank indication and i1 feedback for wideband reports for PDSCH transmissions associated with transmission mode 9/10 configured with PMI/RI reporting with 4/8 ports, Class B CSI reporting with K>1, with alternativeCodeBookEnabledFor4TX-r12=TRUE.

Table 5.2.3.3.1-3D: UCI fields for joint report of CRI, rank indication and i1 feedback for wideband reports (transmission mode 9/10 configured with PMI/RI reporting with 4/8 ports, Class B CSI reporting with K>1, *with alternativeCodeBookEnabledFor4TX-r12=TRUE*).

Field	Bit width				
	Maximum of number of antenna port of the configured CSI-RS resources is 4		Maximum of number of antenna port of the configured CSI-RS resources is 8		
	Max 2 layers	Max 4 layers	Max 2 layers	Max 4 layers	Max 8 layers
CRI	$\lceil \log_2(K) \rceil$	$\lceil \log_2(K) \rceil$	$\lceil \log_2(K) \rceil$	$\lceil \log_2(K) \rceil$	$\lceil \log_2(K) \rceil$
Rank indication i1	4	5	4	5	5

Table 5.2.3.3.1-4 show the fields and the corresponding bit widths for the precoding matrix information feedback for wideband reports for PDSCH transmissions associated with transmission mode 9/10 configured with PMI/RI reporting with 8/12/16 antenna ports for Class A CSI reporting. The parameters (S_1, S_2) in rank 3 and 4 are defined as $(S_1, S_2) = (1, 1)$ for *Codebook-Subset-SelectionConfig*=1, $(S_1, S_2) = \left(\frac{O_1}{2}, \frac{O_2}{2}\right)$ for *Codebook-Subset-SelectionConfig*=2, $(S_1, S_2) = \left(O_1, \frac{O_2}{2}\right)$ for *Codebook-Subset-SelectionConfig*=3, $(S_1, S_2) = \left(O_1, \frac{O_2}{4}\right)$ for *Codebook-Subset-SelectionConfig*=4. The parameters (S_1, S_2) in rank 5 to 8 are defined as $(S_1, S_2) = (1, 1)$ for *Codebook-Subset-SelectionConfig*=1, $(S_1, S_2) = \left(\frac{O_1}{4}, \frac{O_2}{4}\right)$ for *Codebook-Subset-SelectionConfig*=2/3/4.

Table 5.2.3.3.1-4: UCI fields for channel quality information feedback for precoding information (i1) (transmission mode 9/10 configured with Class A CSI reporting with codebook configuration (N_1, N_2, O_1, O_2))

Field	Bit width			
	Rank = 1	Rank = 2	Rank =3	Rank =4

Samsung Exhibit 1017, Page 76 of 121

Wideband first PMI i1,1	$\lceil \log_2(N_1O_1/S_1) \rceil$	$\lceil \log_2(N_1O_1/S_1) \rceil$	$\left\lceil \log_2\left(\frac{N_1O_1}{S_1}\right) \right\rceil + \left\lfloor \frac{7-N_2}{3} \right\rfloor$	$\left\lceil \log_2\left(\frac{N_1O_1}{S_1}\right) \right\rceil + \left\lfloor \frac{7-N_2}{3} \right\rfloor$
Wideband first PMI i1,2	$\lceil \log_2(N_2O_2/S_2) \rceil$	$\lceil \log_2(N_2O_2/S_2) \rceil$	$\lceil \log_2(N_2O_2/S_2) \rceil$	$\lceil \log_2(N_2O_2/S_2) \rceil$

Field	Bit width			
	Rank = 5	Rank = 6	Rank =7	Rank =8
Wideband first PMI i1,1	$\lceil \log_2(N_1O_1/S_1) \rceil$	$\lceil \log_2(N_1O_1/S_1) \rceil$	$\lceil \log_2(N_1O_1/S_1) \rceil$	$\lceil \log_2(N_1O_1/S_1) \rceil$
Wideband first PMI i1,2	$\lceil \log_2(N_2O_2/S_2) \rceil$	$\lceil \log_2(N_2O_2/S_2) \rceil$	$\lceil \log_2(N_2O_2/S_2) \rceil$	$\lceil \log_2(N_2O_2/S_2) \rceil$

The channel quality bits in Table 5.2.3.3.1-1 through Table 5.2.3.3.1-4 form the bit sequence $a_0, a_1, a_2, a_3, ..., a_{A-1}$ with a_0 corresponding to the first bit of the first field in each of the tables, a_1 corresponding to the second bit of the first field in each of the tables, and a_{A-1} corresponding to the last bit in the last field in each of the tables. The first bit of each field corresponds to MSB and the last bit LSB. The RI feedback for one bit is mapped according to Table 5.2.2.6-5 with o_0^{RI} replaced by a_0. The RI feedback for two bits is mapped according to Table 5.2.2.6-6 with o_0^{RI}, o_1^{RI} replaced by a_0, a_1. The RI feedback for three bits is mapped according to Table 5.2.2.6-7 with o_0^{RI}, o_1^{RI}, o_2^{RI} replaced by a_0, a_1, a_2. The mapping for the jointly coded RI and i1 is provided in Table 7.2.2-1E of [3].

When multiplexed with UL-SCH, the channel coding and multiplexing for the transmission configurations in Table 5.2.3.3.1-3, Table 5.2.3.3.1-3A, Table 5.2.3.3.1-3B, Table 5.2.3.3.1-3C and Table 5.2.3.3.1-3D is performed assuming RI transmission in section 5.2.2.6. All other transmission configurations in this section are coded and multiplexed assuming CQI/PMI transmission in section 5.2.2.6.

5.2.3.3.2 Channel quality information formats for UE-selected sub-band reports

Table 5.2.3.3.2-1 shows the fields and the corresponding bit widths for the sub-band channel quality information feedback for UE-selected sub-band reports for PDSCH transmissions associated with transmission mode 1, transmission mode 2, transmission mode 3, transmission mode 7, transmission mode 8 configured without PMI/RI reporting, transmission mode 9 configured without PMI/RI reporting or configured with 1 antenna port, and transmission mode 10 configured without PMI/RI reporting or configured with 1 antenna port.

Table 5.2.3.3.2-1A shows the fields and the corresponding bit widths for the sub-band channel quality information feedback for UE-selected sub-band reports for PDSCH transmissions associated with transmission mode 9/10 configured without PMI reporting for Class B CSI reporting with 2/4/8 antenna ports.

Table 5.2.3.3.2-1: UCI fields for channel quality information feedback for UE-selected sub-band CQI reports (transmission mode 1, transmission mode 2, transmission mode 3, transmission mode 7, transmission mode 8 configured without PMI/RI reporting, transmission mode 9 configured without PMI/RI reporting or configured with 1 antenna port, transmission mode 10 configured without PMI/RI reporting or configured with 1 antenna port, and transmission mode 9/10 configured without PMI/RI with Class B CSI reporting)

Field	Bit width
Sub-band CQI	4
Sub-band label	1 or 2

Samsung Exhibit 1017, Page 77 of 121

Table 5.2.3.3.2-1A: UCI fields for channel quality information feedback for UE-selected subband CQI reports (transmission mode 9/10 configured without PMI reporting for Class B CSI reporting with 2/4/8 antenna ports)

Field	Bit width	
	Rank = 1	Rank > 1
Wide-band CQI	4	4
Spatial differential CQI	0	3
Sub-band label	1 or 2	1 or 2

Table 5.2.3.3.2-2 shows the fields and the corresponding bit widths for the sub-band channel quality information feedback for UE-selected sub-band reports for PDSCH transmissions associated with transmission mode 4, transmission mode 5, transmission mode 6, and transmission mode 8 configured with PMI/RI reporting except with *alternativeCodeBookEnabledFor4TX-r12=TRUE*.

Table 5.2.3.3.2-2: UCI fields for channel quality information feedback for UE-selected sub-band reports (transmission mode 4, transmission mode 5, transmission mode 6 and transmission mode 8 configured with PMI/RI reporting except with *alternativeCodeBookEnabledFor4TX-r12=TRUE*)

Field	Bit width			
	2 antenna ports		4 antenna ports	
	Rank = 1	Rank = 2	Rank = 1	Rank > 1
Sub-band CQI	4	4	4	4
Spatial differential CQI	0	3	0	3
Sub-band label	1 or 2	1 or 2	1 or 2	1 or 2

Table 5.2.3.3.2-2A and Table 5.2.3.3.2-2B show the fields and the corresponding bit widths for the sub-band channel quality information feedback for UE-selected sub-band reports for PDSCH transmissions associated with transmission mode 9 configured with PMI/RI reporting with 2/4/8 antenna ports except with *alternativeCodeBookEnabledFor4TX-r12=TRUE,* and transmission mode 10 configured with PMI/RI reporting with 2/4/8 antenna ports except with *alternativeCodeBookEnabledFor4TX-r12=TRUE*, and transmission mode 9/10 configured with PMI/RI reporting with 2/4/8 antenna ports for Class B CSI reporting with K=1 and *PMI-Config=2,*K>1, except with *alternativeCodeBookEnabledFor4TX-r12=TRUE*. The number of CSI-RS resources K is defined in [3] and *PMI-Config* is configured by higher layers [6].

Table 5.2.3.3.2-2A-1 shows UCI fields for channel quality information feedback for UE-selected sub-band reports (transmission mode 9/10 configured with 2/4/8 antenna ports for Class B CSI reporting with K=1 and *PMI-Config=1,* and transmission mode 9/10 configured without PMI reporting for Class B CSI reporting with 2/4/8 antenna ports.

Table 5.2.3.3.2-2C shows the fields and the corresponding bit widths for the sub-band channel quality information feedback for UE-selected sub-band reports for PDSCH transmissions associated with transmission modes 8, 9 and 10 configured with PMI/RI reporting and *alternativeCodeBookEnabledFor4TX-r12 =TRUE*, and transmission mode 9/10 configured with PMI/RI reporting with 4 antenna ports for Class B CSI reporting with K=1 with *PMI-Config* =2, and with *alternativeCodeBookEnabledFor4TX-r12=TRUE*..

Samsung Exhibit 1017, Page 78 of 121

Table 5.2.3.3.2-2A: UCI fields for channel quality information feedback for UE-selected sub-band reports (transmission mode 9 configured with PMI/RI reporting with 2/4 antenna ports except with *alternativeCodeBookEnabledFor4TX-r12=TRUE,* and transmission mode 10 configured with PMI/RI reporting with 2/4 antenna ports except with *alternativeCodeBookEnabledFor4TX-r12=TRUE,* and transmission mode 9/10 configured with 2/4 antenna ports for Class B CSI reporting with K=1 and *PMI-Config*=2, K>1 except with *alternativeCodeBookEnabledFor4TX-r12=TRUE*)

Field	Bit width			
	2 antenna ports		4 antenna ports	
	Rank = 1	Rank = 2	Rank = 1	Rank > 1
Wide-band CQI	0	0	0	0
Sub-band CQI	4	4	4	4
Spatial differential CQI	0	3	0	3
Wide-band i2	0	0	0	0
Sub-band i2	0	0	0	0
Sub-band label	1 or 2	1 or 2	1 or 2	1 or 2

Table 5.2.3.3.2-2A-1: UCI fields for channel quality information feedback for UE-selected sub-band reports (transmission mode 9/10 configured with 2/4/8 antenna ports for Class B CSI reporting with K=1 and *PMI-Config=1, transmission mode 9/10 configured without PMI reporting for Class B CSI reporting with 2/4/8 antenna ports*)

Field	Bit width	
	2/4/8 antenna ports	
	Rank = 1	Rank > 1
Wide-band CQI	0	0
Sub-band CQI	4	4
Spatial differential CQI	0	3
Wide-band i2	0	0
Sub-band i2	0	0
Sub-band label	1 or 2	1 or 2

Table 5.2.3.3.2-2B: UCI fields for channel quality feedback for UE-selected sub-band reports (transmission mode 9 configured with PMI/RI reporting with 8 antenna ports, transmission mode 10 configured with PMI/RI reporting with 8 antenna ports, and transmission mode 9/10 configured with 8 antenna ports for Class B CSI reporting with K=1 with *PMI-Config*=2, and K>1)

Field	Bit width									
	8 antenna ports									
	Rank = 1		Rank = 2, 3		Rank = 4		Rank = 5, 6, 7		Rank = 8	
	PTI=0	PTI=1	PTI=0	PTI=1	PTI=0	PTI=1	PTI=0	PTI=1	PTI=0	PTI=1
Wide-band CQI	4	0	4	0	4	0	4	0	4	0
Sub-band CQI	0	4	0	4	0	4	0	4	0	4
Spatial differential CQI	0	0	3	3	3	3	3	3	3	3
Wide-band i2	4	0	4	0	3	0	0	0	0	0
Sub-band i2	0	4	0	2	0	2	0	0	0	0
Sub-band label	0	1 or 2	0	1 or 2	0	1 or 2	0	1 or 2	0	1 or 2

Samsung Exhibit 1017, Page 79 of 121

Table 5.2.3.3.2-2C: UCI fields for channel quality feedback for UE-selected sub-band reports with 4 antenna ports (transmission modes 8, 9 and 10 configured with PMI/RI reporting, 4 antenna ports and *alternativeCodeBookEnabledFor4TX-r12=TRUE,* and transmission mode 9/10 configured with 4 antenna ports for Class B CSI reporting with K=1 and *PMI-Config*=2, and K>1, with *alternativeCodeBookEnabledFor4TX-r12=TRUE*)

Field	Bit width					
	4 antenna ports					
	Rank = 1		Rank = 2		Rank = 3	Rank=4
	PTI=0	PTI=1	PTI=0	PTI=1	PTI=1	PTI=1
Wide-band CQI	4	0	4	0	0	0
Sub-band CQI	0	4	0	4	4	4
Spatial differential CQI	0	0	3	3	3	3
Wide-band i2	4	0	4	0	0	0
Sub-band i2	0	4	0	2	2	2
Sub-band label	0	1 or 2	0	1 or 2	1 or 2	1 or 2

Table 5.2.3.3.2-3 shows the fields and the corresponding bit widths for the wide-band channel quality and precoding matrix information feedback for UE-selected sub-band reports for PDSCH transmissions associated with transmission mode 4, transmission mode 5, transmission mode 6 and transmission mode 8 configured with PMI/RI reporting except with *alternativeCodeBookEnabledFor4TX-r12=TRUE*.

Table 5.2.3.3.2-3: UCI fields for channel quality information feedback for UE-selected sub-band CQI reports (transmission mode 4, transmission mode 5, transmission mode 6 and transmission mode 8 configured with PMI/RI reporting except with *alternativeCodeBookEnabledFor4TX-r12=TRUE*)

Field	Bit width			
	2 antenna ports		4 antenna ports	
	Rank = 1	Rank = 2	Rank = 1	Rank > 1
Wide-band CQI	4	4	4	4
Spatial differential CQI	0	3	0	3
Precoding matrix indicator	2	1	4	4

Table 5.2.3.3.2-3A and Table 5.2.3.3.2-3B show the fields and the corresponding bit widths for the wide-band channel quality and precoding matrix information feedback for UE-selected sub-band reports for PDSCH transmissions associated with transmission mode 9 configured with PMI/RI reporting with 2/4/8 antenna ports except with *alternativeCodeBookEnabledFor4TX-r12=TRUE*, transmission mode 10 configured with PMI/RI reporting with 2/4/8 antenna ports except with *alternativeCodeBookEnabledFor4TX-r12=TRUE*, and transmission mode 9/10 configured with PMI/RI reporting with 2/4/8 antenna ports for Class B CSI reporting with K=1 and *PMI-Config* =2, and K>1, except with *alternativeCodeBookEnabledFor4TX-r12=TRUE*

Table 5.2.3.3.2-3A-1 shows the fields and the corresponding bit widths for the wide-band channel quality and precoding matrix information feedback for UE-selected sub-band reports for PDSCH transmissions associated with transmission mode 9/10 configured with PMI/RI reporting with 2/4/8 antenna ports for Class B CSI reporting with K=1 and *PMI-Config* =1.

Table 5.2.3.3.2-3C shows the fields and the corresponding bit widths for the wide-band channel quality and precoding matrix information feedback for UE-selected sub-band reports for PDSCH transmissions associated with transmission modes 8, 9 and 10 configured with PMI/RI reporting, 4 antenna ports and *alternativeCodeBookEnabledFor4TX-r12=TRUE,* and transmission mode 9/10 configured with PMI/RI reporting with 4 antenna ports for Class B CSI reporting with K=1 and *PMI-Config* =2, K>1 with *alternativeCodeBookEnabledFor4TX-r12=TRUE.*

Table 5.2.3.3.2-3A: UCI fields for wide-band channel quality and precoding matrix information feedback for UE-selected sub-band reports (transmission mode 9 configured with PMI/RI reporting with 2/4 antenna ports except with *alternativeCodeBookEnabledFor4TX-r12=TRUE,* transmission mode 10 configured with PMI/RI reporting with 2/4 antenna ports except with *alternativeCodeBookEnabledFor4TX-r12=TRUE,* and transmission mode 9/10 configured with PMI/RI reporting with 2/4 antenna ports for Class B CSI reporting with K=1 and *PMI-Config*=2, K>1, except with *alternativeCodeBookEnabledFor4TX-r12=TRUE*)

Field	Bit width			
	2 antenna ports		4 antenna ports	
	Rank = 1	Rank = 2	Rank = 1	Rank > 1
Wide-band CQI	4	4	4	4
Spatial differential CQI	0	3	0	3
i1	0	0	0	0
Wide-band i2	2	1	4	4

Table 5.2.3.3.2-3A-1: UCI fields for wide-band channel quality and precoding matrix information feedback for UE-selected sub-band reports (transmission mode 9/10 configured with 2/4/8 antenna ports for Class B CSI reporting with K=1 and *PMI-Config*=1)

Field	Bit width					
	2 antenna ports		4 antenna ports			
	Rank = 1	Rank = 2	Rank = 1	Rank =2	Rank =3	Rank =4
Wideband CQI	4	4	4	4	4	4
Spatial differential CQI	0	3	0	3	3	3
i1	0	0	0	0	0	0
Wide-band i2	2	1	3	3	2	1
Field	**Bit width**					
	8 antenna ports					
	Rank = 1	**Rank = 2**	**Rank = 3**	**Rank =4**	**Rank =5~8**	
Wideband CQI	4	4	4	4	4	
Spatial differential CQI	0	3	3	3	3	
i1	0	0	0	0	0	
Wide-band i2	4	4	4	3	0	

Table 5.2.3.3.2-3B: UCI fields for wide-band channel quality and precoding matrix information feedback for UE-selected sub-band reports (transmission mode 9 configured with PMI/RI reporting with 8 antenna ports and transmission mode 10 configured with PMI/RI reporting with 8 antenna ports, and transmission mode 9/10 configured with PMI/RI reporting with 8 antenna ports for Class B CSI reporting with K=1 and *PMI-Config*=2, K>1)

Field	Bit width					
	8 antenna ports					
	Rank = 1		Rank = 2		Rank = 3	
	PTI=0	PTI=1	PTI=0	PTI=1	PTI=0	PTI=1
Wide-band CQI	0	4	0	4	0	4
Spatial differential CQI	0	0	0	3	0	3
i1	4	0	4	0	2	0
Wide-band i2	0	4	0	4	0	4
Field	**Bit width**					
	8 antenna ports					
	Rank = 4		**Rank = 5, 6, 7**		**Rank = 8**	
	PTI=0	**PTI=1**	**PTI=0**	**PTI=1**	**PTI=0**	**PTI=1**
Wide-band CQI	0	4	0	4	0	4
Spatial differential CQI	0	3	0	3	0	3
i1	2	0	2	0	0	0
Wide-band i2	0	3	0	0	0	0

Samsung Exhibit 1017, Page 81 of 121

Table 5.2.3.3.2-3B-1 shows the fields and the corresponding bit widths for the wide-band channel quality and precoding matrix information feedback for UE-selected sub-band reports for PDSCH transmissions associated with transmission mode 9/10 configured with PMI/RI reporting for Class A CSI reporting with *Codebook-Subset-SelectionConfig*=1.

Table 5.2.3.3.2-3B-2 shows the fields and the corresponding bit widths for the wide-band channel quality and precoding matrix information feedback for UE-selected sub-band reports for PDSCH transmissions associated with transmission mode 9/10 configured with PMI/RI reporting for Class A CSI reporting with *Codebook-Subset-SelectionConfig*=2/3/4.

Table 5.2.3.3.2-3B-1: UCI fields for wide-band channel quality and precoding matrix information feedback for UE-selected sub-band reports (transmission mode 9/10 configured with Class A CSI reporting with codebook configuration (N_1, N_2, O_1, O_2), and *Codebook-Subset-SelectionConfig*=1)

Field	Bit width					
	8/12/16 antenna ports					
	Rank = 1		Rank = 2		Rank = 3	
	PTI=0	PTI=1	PTI=0	PTI=1	PTI=0	PTI=1
Wide-band CQI	0	4	0	4	0	4
Spatial differential CQI	0	0	0	3	0	3
Wideband first PMI i1,1	$\left\lceil \log_2\left(\frac{N_1O_1}{S_1}\right)\right\rceil$	0	$\left\lceil \log_2\left(\frac{N_1O_1}{S_1}\right)\right\rceil$	0	$\left\lceil \log_2\left(\frac{N_1O_1}{S_1}\right)\right\rceil + \left\lfloor \frac{7-N_2}{3}\right\rfloor$	0
Wideband first PMI i1,2	$\left\lceil \log_2\left(\frac{N_2O_2}{S_2}\right)\right\rceil$	0	$\left\lceil \log_2\left(\frac{N_2O_2}{S_2}\right)\right\rceil$	0	$\left\lceil \log_2\left(\frac{N_2O_2}{S_2}\right)\right\rceil$	0
Wide-band i2	0	2	0	2	0	1

Field	Bit width			
	8/12/16 antenna ports			
	Rank = 4		Rank = 5 to Rank = 8	
	PTI=0	PTI=1	PTI=0	PTI=1
Wide-band CQI	0	4	0	4
Spatial differential CQI	0	3	0	3
Wideband first PMI i1,1	$\left\lceil \log_2\left(\frac{N_1O_1}{S_1}\right)\right\rceil + \left\lfloor \frac{7-N_2}{3}\right\rfloor$	0	$\left\lceil \log_2\left(\frac{N_1O_1}{S_1}\right)\right\rceil$	0
Wideband first PMI i1,2	$\left\lceil \log_2\left(\frac{N_2O_2}{S_2}\right)\right\rceil$	0	$\left\lceil \log_2\left(\frac{N_2O_2}{S_2}\right)\right\rceil$	0
Wide-band i2	0	1	0	0

Samsung Exhibit 1017, Page 82 of 121

Table 5.2.3.3.2-3B-2: UCI fields for wide-band channel quality and precoding matrix information feedback for UE-selected sub-band reports (transmission mode 9/10 configured with Class A CSI reporting with codebook configuration (N_1, N_2, O_1, O_2), and *Codebook-Subset-SelectionConfig*=2/3/4)

Field	Bit width					
	8/12/16 antenna ports					
	Rank = 1		Rank = 2		Rank = 3	
	PTI=0	PTI=1	PTI=0	PTI=1	PTI=0	PTI=1
Wide-band CQI	0	4	0	4	0	4
Spatial differential CQI	0	0	0	3	0	3
Wideband first PMI i1,1	$\left\lceil \log_2\left(\frac{N_1O_1}{S_1}\right)\right\rceil$	0	$\left\lceil \log_2\left(\frac{N_1O_1}{S_1}\right)\right\rceil$	0	$\left\lceil \log_2\left(\frac{N_1O_1}{S_1}\right)\right\rceil + \left\lfloor \frac{7-N_2}{3}\right\rfloor$	0
Wideband first PMI i1,2	$\left\lceil \log_2\left(\frac{N_2O_2}{S_2}\right)\right\rceil$	0	$\left\lceil \log_2\left(\frac{N_2O_2}{S_2}\right)\right\rceil$	0	$\left\lceil \log_2\left(\frac{N_2O_2}{S_2}\right)\right\rceil$	0
Wide-band i2	0	4	0	4	0	4

Field	Bit width			
	8/12/16 antenna ports			
	Rank = 4		Rank = 5 to Rank = 8	
	PTI=0	PTI=1	PTI=0	PTI=1
Wide-band CQI	0	4	0	4
Spatial differential CQI	0	3	0	3
Wideband first PMI i1,1	$\left\lceil \log_2\left(\frac{N_1O_1}{S_1}\right)\right\rceil + \left\lfloor \frac{7-N_2}{3}\right\rfloor$	0	$\left\lceil \log_2\left(\frac{N_1O_1}{S_1}\right)\right\rceil$	0
Wideband first PMI i1,2	$\left\lceil \log_2\left(\frac{N_2O_2}{S_2}\right)\right\rceil$	0	$\left\lceil \log_2\left(\frac{N_2O_2}{S_2}\right)\right\rceil$	0
Wide-band i2	0	3	0	0

Table 5.2.3.3.2-3C: UCI fields for wide-band channel quality and precoding matrix information feedback for UE-selected sub-band reports with 4 antenna ports (transmission modes 8, 9 and 10 configured with PMI/RI reporting and *alternativeCodeBookEnabledFor4TX-r12=TRUE,* and transmission mode 9/10 configured with Class B CSI reporting with K=1 and *PMI-Config*=2, and K>1, with *alternativeCodeBookEnabledFor4TX-r12=TRUE*)

Field	Bit width					
	4 antenna ports					
	Rank = 1		Rank = 2		Rank = 3	Rank=4
	PTI=0	PTI=1	PTI=0	PTI=1	PTI=1	PTI=1
Wide-band CQI	0	4	0	4	4	4
Spatial differential CQI	0	0	0	3	3	3
i1	4	0	4	0	0	0
Wide-band i2	0	4	0	4	4	4

Table 5.2.3.3.2-4 shows the fields and the corresponding bit width for the rank indication feedback for UE-selected sub-band reports for PDSCH transmissions associated with transmission mode 3, transmission mode 4, transmission mode 8 configured with PMI/RI reporting except with *alternativeCodeBookEnabledFor4TX-r12=TRUE,* transmission mode 9/10 configured with PMI/RI reporting with 2/4/8 antenna ports with Class B CSI reporting with K=1 and *PMI-*

Samsung Exhibit 1017, Page 83 of 121

Config=1, and transmission mode 9/10 configured without PMI reporting for Class B CSI reporting with K=1 and *PMI-Config*=1 for 2/4/8 antenna ports.

Table 5.2.3.3.2-4: UCI fields for rank indication feedback for UE-selected sub-band reports (transmission mode 3, transmission mode 4, and transmission mode 8 configured with PMI/RI reporting except with *alternativeCodeBookEnabledFor4TX-r12=TRUE,* and transmission mode 9/10 configured with PMI/RI reporting with 2/4/8 antenna ports with Class B CSI reporting with K=1 and *PMI-Config*=1, and transmission mode 9/10 configured without PMI reporting for Class B CSI reporting with K=1 and *PMI-Config*=1 for 2/4/8 antenna ports).

Field	Bit width					
	2 antenna ports	4 antenna ports		8 antenna ports		
		Max 2 layers	Max 4 layers	Max 2 layers	Max 4 layers	Max 8 layers
Rank indication	1	1	2	1	2	3

Table 5.2.3.3.2-4A shows the fields and the corresponding bit width for the rank indication and precoder type indication (PTI) feedback for UE-selected sub-band reports for PDSCH transmissions associated with transmission mode 9 configured with PMI/RI reporting with 2/4/8 antenna ports and transmission mode 10 configured with PMI/RI reporting with 2/4/8 antenna ports*,* and transmission mode 9/10 configured with PMI/RI reporting with 2/4/8 antenna ports for Class B CSI reporting with K=1 and *PMI-Config* =2, K>1 except with *alternativeCodeBookEnabledFor4TX-r12=TRUE, and* transmission mode 9/10 configured with PMI/RI reporting with 8/12/16 antenna ports for Class A CSI reporting.

Table 5.2.3.3.2-4B shows the fields and the corresponding bit width for the rank indication and precoder type indication (PTI) feedback with 4 antenna ports for UE-selected sub-band reports for PDSCH transmissions associated with transmission mode 8, transmission mode 9 and transmission mode 10 configured with PMI/RI reporting and *alternativeCodeBookEnabledFor4TX-r12 =TRUE,* and transmission mode 9/10 configured with PMI/RI reporting for Class B CSI reporting with K=1 and *PMI-Config*=2, K>1, with *alternativeCodeBookEnabledFor4TX-r12=TRUE*.

Table 5.2.3.3.2-4A: UCI fields for joint report of RI and PTI (transmission mode 9 configured with PMI/RI reporting with 2/4/8 antenna ports except with *alternativeCodeBookEnabledFor4TX-r12=TRUE,* transmission mode 10 configured with PMI/RI reporting with 2/4/8 antenna ports except with *alternativeCodeBookEnabledFor4TX-r12=TRUE,* transmission mode 9/10 configured with PMI/RI reporting with 2/4/8 antenna ports with Class B CSI reporting with K=1 and *PMI-Config*=2, K>1 except with *alternativeCodeBookEnabledFor4TX-r12=TRUE,* and transmission mode 9/10 configured with PMI/RI reporting with 8/12/16 antenna ports for Class A CSI reporting)

Field	Bit width					
	2 antenna ports	4 antenna ports		8/12/16 antenna ports		
		Max 2 layers	Max 4 layers	Max 2 layers	Max 4 layers	Max 8 layers
Rank indication	1	1	2	1	2	3
Precoder type indication	-	-	-	1	1	1

Table 5.2.3.3.2-4B: UCI fields for joint report of RI and PTI with 4 antenna ports (transmission mode 8, transmission mode 9 and transmission mode 10 configured with PMI/RI reporting and *alternativeCodeBookEnabledFor4TX-r12=TRUE,* and transmission mode 9/10 configured with PMI/RI reporting for Class B CSI reporting with K=1 and *PMI-Config*=2, K>1, with *alternativeCodeBookEnabledFor4TX-r12=TRUE*)

Field	Bit width	
	4 antenna ports	
	Max 2 layers	Max 4 layers
Rank indication	1	2
Precoder type indication	1	1

Samsung Exhibit 1017, Page 84 of 121

Table 5.2.3.3.2-4C shows the fields and the corresponding bit widths for the joint report of CRI and rank indication feedback for UE-selected sub-band reports for PDSCH transmissions associated with transmission mode 9/10 configured with PMI/RI reporting for Class B CSI reporting with K>1,and transmission mode 9/10 configured without PMI reporting with 2/4 antenna ports for Class B CSI reporting with K>1.

Table 5.2.3.3.2-4D shows the fields and the corresponding bit widths for the joint report of CRI , rank indication and PTI feedback for UE-selected sub-band reports for PDSCH transmissions associated with transmission mode 9/10 configured with PMI/RI reporting for Class B CSI reporting with K>1.

Table 5.2.3.3.2-4C: UCI fields for joint report of CRI and rank indication feedback for wideband reports (transmission mode 9/10 configured with PMI/RI reporting with 2/4 antenna ports for Class B CSI reporting with K>1, and transmission mode 9/10 configured without PMI reporting with 2/4 antenna ports for Class B CSI reporting with K>1).

Field	Bit width	
	Max 2 layers	Max 4 layers
CRI	$\lceil \log_2(K) \rceil$	$\lceil \log_2(K) \rceil$
Rank indication	1	2

Table 5.2.3.3.2-4D: UCI fields for joint report of CRI, RI and PTI (transmission mode 9/10 configured with PMI/RI reporting with 4/8 antenna ports with Class B CSI reporting with K>1, with *alternativeCodeBookEnabledFor4TX-r12=TRUE*)

Field	Bit width				
	Maximum of number of antenna port of the configured CSI-RS resources is 4		Maximum of number of antenna port of the configured CSI-RS resources is 8		
	Max 2 layers	Max 4 layers	Max 2 layers	Max 4 layers	Max 8 layers
CRI	$\lceil \log_2(K) \rceil$	$\lceil \log_2(K) \rceil$	$\lceil \log_2(K) \rceil$	$\lceil \log_2(K) \rceil$	$\lceil \log_2(K) \rceil$
Rank indication	1	2	1	2	3
Precoder type indication	1	1	1	1	1

The channel quality bits in Table 5.2.3.3.2-1 through Table 5.2.3.3.2-4D form the bit sequence $a_0, a_1, a_2, a_3, ..., a_{A-1}$ with a_0 corresponding to the first bit of the first field in each of the tables, a_1 corresponding to the second bit of the first field in each of the tables, and a_{A-1} corresponding to the last bit in the last field in each of the tables. The first bit of each field corresponds to MSB and the last bit LSB. The RI feedback for one bit is mapped according to Table 5.2.2.6-5 with o_0^{RI} replaced by a_0 . The RI feedback for two bits is mapped according to Table 5.2.2.6-6 with o_0^{RI} , o_1^{RI} replaced by a_0, a_1 . The RI feedback for three bits is mapped according to Table 5.2.2.6-7 with o_0^{RI} , o_1^{RI} , o_2^{RI} replaced by a_0, a_1, a_2 .

When multiplexed with UL-SCH, the channel coding and multiplexing for the transmission configurations in Table 5.2.3.3.2-4, Table 5.2.3.3.2-4A, Table 5.2.3.3.2-4B, Table 5.2.3.3.2-4C and Table 5.2.3.3.2-4D is performed assuming RI transmission in section 5.2.2.6. All other transmission configurations in this section are coded and multiplexed assuming CQI/PMI transmission in section 5.2.2.6.

5.2.3.4 Channel coding for UCI channel quality information and HARQ-ACK

This section defines the channel coding scheme for the simultaneous transmission of channel quality information and HARQ-ACK information in a subframe.

When normal CP is used for uplink transmission, the channel quality information is coded according to section 5.2.3.3 with input bit sequence $a'_0, a'_1, a'_2, a'_3, ..., a'_{A'-1}$ and output bit sequence $b'_0, b'_1, b'_2, b'_3, ..., b'_{B'-1}$, where $B' = 20$. The

Samsung Exhibit 1017, Page 85 of 121

HARQ-ACK bits are denoted by a_0'' in case one HARQ-ACK bit or a_0'', a_1'' in case two HARQ-ACK bits are reported per subframe. Each positive acknowledgement (ACK) is encoded as a binary '1' and each negative acknowledgement (NACK) is encoded as a binary '0'.

The output of this channel coding block for normal CP is denoted by $b_0, b_1, b_2, b_3, ..., b_{B-1}$, where

$$b_i = b_i', i = 0, ..., B' - 1$$

In case one HARQ-ACK bit is reported per subframe:

$$b_{B'} = a_0'' \text{ and } B = (B' + 1)$$

In case two HARQ-ACK bits are reported per subframe:

$$b_{B'} = a_0'', b_{B'+1} = a_1'' \text{ and } B = (B' + 2)$$

When extended CP is used for uplink transmission, the channel quality information and the HARQ-ACK bits are jointly coded. The HARQ-ACK bits are denoted by a_0'' in case one HARQ-ACK bit or $[a_0'', a_1'']$ in case two HARQ-ACK bits are reported per subframe.

The channel quality information denoted by $a_0', a_1', a_2', a_3', ..., a_{A'-1}'$ is multiplexed with the HARQ-ACK bits to yield the sequence $a_0, a_1, a_2, a_3, ..., a_{A-1}$ as follows

$$a_i = a_i', i = 0, ..., A' - 1$$

and

$a_{A'} = a_0''$ and $A = (A' + 1)$ in case one HARQ-ACK bit is reported per subframe, or

$a_{A'} = a_0''$, $a_{(A'+1)} = a_1''$ and $A = (A' + 2)$ in case two HARQ-ACK bits are reported per subframe.

The sequence $a_0, a_1, a_2, a_3, ..., a_{A-1}$ is encoded according to section 5.2.3.3 to yield the output bit sequence $b_0, b_1, b_2, b_3, ..., b_{B-1}$ where $B = 20$.

5.2.4 Uplink control information on PUSCH without UL-SCH data

When control data are sent via PUSCH without UL-SCH data, the following coding steps can be identified:

- Channel coding of control information
- Control information mapping
- Channel interleaver

5.2.4.1 Channel coding of control information

Control data arrives at the coding unit in the form of channel quality information (CQI and/or PMI), HARQ-ACK and rank indication. Different coding rates for the control information are achieved by allocating different number of coded symbols for its transmission. When the UE transmits HARQ-ACK bits or rank indicator bits, it shall determine the number of coded symbols Q' for HARQ-ACK or rank indicator as

$$Q' = \min\left(\left\lceil \frac{O \cdot M_{sc}^{PUSCH} \cdot N_{symb}^{PUSCH} \cdot \beta_{offset}^{PUSCH}}{O_{CQI-MIN}} \right\rceil, 4 \cdot M_{sc}^{PUSCH} \right)$$

where O is the number of HARQ-ACK bits as defined in section 5.2.2.6, or rank indicator bits, $O_{CQI-MIN}$ is the number of CQI bits including CRC bits assuming rank equals to 1 for all serving cells for which an aperiodic CSI report

Samsung Exhibit 1017, Page 86 of 121

is triggered [3], $M_{\text{sc}}^{\text{PUSCH}}$ is the scheduled bandwidth for PUSCH transmission in the current subframe expressed as a number of subcarriers in [2], and $N_{\text{symb}}^{\text{PUSCH}}$ is the number of SC-FDMA symbols in the current PUSCH transmission sub-frame given by $N_{\text{symb}}^{\text{PUSCH}} = \left(2 \cdot \left(N_{\text{symb}}^{\text{UL}} - 1\right) - N_{SRS}\right)$, where N_{SRS} is equal to 1 if UE is configured to send PUSCH and SRS in the same subframe for the current subframe, or if the PUSCH resource allocation for the current subframe even partially overlaps with the cell-specific SRS subframe and bandwidth configuration defined in section 5.5.3 of [2], or if the current subframe is a UE-specific type-1 SRS subframe as defined in Section 8.2 of [3], or if the current subframe is a UE-specific type-0 SRS subframe as defined in section 8.2 of [3] and the UE is configured with multiple TAGs. Otherwise N_{SRS} is equal to 0.

For HARQ-ACK information $Q_{ACK} = Q_m \cdot Q'$ and [$\beta_{offset}^{PUSCH} = \beta_{offset}^{HARQ-ACK} \big/ \beta_{offset}^{CQI}$]. For UEs configured with no more than five DL cells, $\beta_{offset}^{HARQ-ACK}$ shall be determined according to [3]. For UEs configured with more than five DL cells, $\beta_{offset}^{HARQ-ACK}$ shall be determined according to [3] depending on the number of HARQ-ACK feedback bits.

For rank indication or CRI, $Q_{RI} = Q_m \cdot Q'$, $Q_{CRI} = Q_m \cdot Q'$ and [$\beta_{offset}^{PUSCH} = \beta_{offset}^{RI} \big/ \beta_{offset}^{CQI}$], where β_{offset}^{RI} shall be determined according to [3].

For CQI and/or PMI information $Q_{CQI} = N_{symb}^{PUSCH} \cdot M_{sc}^{PUSCH} \cdot Q_m - Q_{RI}$.

The channel coding and rate matching of the control data is performed according to section 5.2.2.6. The coded output sequence for channel quality information is denoted by $q_0, q_1, q_2, q_3, \ldots, q_{Q_{CQI}-1}$, the coded vector sequence output for HARQ-ACK is denoted by $\underline{q}_0^{ACK}, \underline{q}_1^{ACK}, \underline{q}_2^{ACK}, \ldots, \underline{q}_{Q'_{ACK}-1}^{ACK}$ and the coded vector sequence output for rank indication or CRI, is denoted by $\underline{q}_0^{RI}, \underline{q}_1^{RI}, \underline{q}_2^{RI}, \ldots, \underline{q}_{Q'_{RI}-1}^{RI}$.

5.2.4.2 Control information mapping

The input are the coded bits of the channel quality information denoted by $q_0, q_1, q_2, q_3, \ldots, q_{Q_{CQI}-1}$. The output is denoted by $\underline{g}_0, \underline{g}_1, \underline{g}_2, \underline{g}_3, \ldots, \underline{g}_{H'-1}$, where $H = Q_{CQI}$ and $H' = H / Q_m$, and where $\underline{g}_i$, $i = 0, \ldots, H'-1$ are column vectors of length Q_m. H is the total number of coded bits allocated for CQI/PMI information.

The control information shall be mapped as follows:

Set j, k to 0

while $j < Q_{CQI}$

$\underline{g}_k = [q_j \cdots q_{j+Q_m-1}]^T$

$j = j + Q_m$

$k = k + 1$

end while

5.2.4.3 Channel interleaver

The vector sequences $\underline{g}_0, \underline{g}_1, \underline{g}_2, \ldots, \underline{g}_{H'-1}$, $\underline{q}_0^{RI}, \underline{q}_1^{RI}, \underline{q}_2^{RI}, \ldots, \underline{q}_{Q'_{RI}-1}^{RI}$ and $\underline{q}_0^{ACK}, \underline{q}_1^{ACK}, \underline{q}_2^{ACK}, \ldots, \underline{q}_{Q'_{ACK}-1}^{ACK}$ are channel interleaved according section 5.2.2.8. The bits after channel interleaving are denoted by $h_0, h_1, h_2, \ldots, h_{H+Q_{RI}-1}$.

Samsung Exhibit 1017, Page 87 of 121

5.3 Downlink transport channels and control information

If the UE is configured with a Master Cell Group (MCG) and Secondary Cell Group (SCG) [6], the procedures described in this clause are applied to the MCG and SCG, respectively. When the procedures are applied to a SCG, the term primary cell refers to the primary SCell (PSCell) of the SCG.

If the UE is configured with a PUCCH SCell [6], the procedures described in this clause are applied to the group of DL cells associated with the primary cell and the group of DL cells associated with the PUCCH SCell, respectively. When the procedures are applied to the group of DL cells associated with the PUCCH SCell, the term primary cell refers to the PUCCH SCell.

5.3.1 Broadcast channel

Figure 5.3.1-1 shows the processing structure for the BCH transport channel. Data arrives to the coding unit in the form of a maximum of one transport block every transmission time interval (TTI) of 40ms. The following coding steps can be identified:

- Add CRC to the transport block
- Channel coding
- Rate matching

The coding steps for BCH transport channel are shown in the figure below.

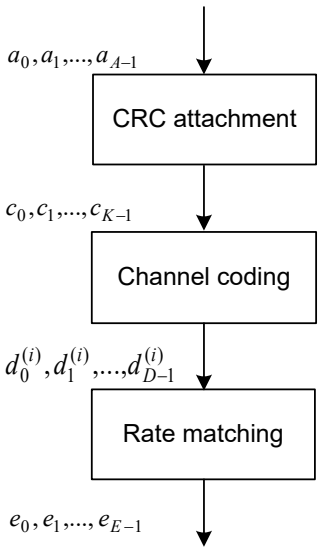

Figure 5.3.1-1: Transport channel processing for BCH.

5.3.1.1 Transport block CRC attachment

Error detection is provided on BCH transport blocks through a Cyclic Redundancy Check (CRC).

The entire transport block is used to calculate the CRC parity bits. Denote the bits in a transport block delivered to layer 1 by $a_0, a_1, a_2, a_3, ..., a_{A-1}$, and the parity bits by $p_0, p_1, p_2, p_3, ..., p_{L-1}$. A is the size of the transport block and set to 24 bits and L is the number of parity bits. The lowest order information bit a_0 is mapped to the most significant bit of the transport block as defined in section 6.1.1 of [5].

The parity bits are computed and attached to the BCH transport block according to section 5.1.1 setting L to 16 bits. After the attachment, the CRC bits are scrambled according to the eNodeB transmit antenna configuration with the sequence $x_{ant,0}, x_{ant,1}, ..., x_{ant,15}$ as indicated in Table 5.3.1.1-1 to form the sequence of bits $c_0, c_1, c_2, c_3, ..., c_{K-1}$ where

Samsung Exhibit 1017, Page 88 of 121

$c_k = a_k$ for k = 0, 1, 2, …, A-1

$c_k = \left(p_{k-A} + x_{ant,k-A}\right) \bmod 2$ for k = A, A+1, A+2,..., A+15.

Table 5.3.1.1-1: CRC mask for PBCH.

Number of transmit antenna ports at eNodeB	PBCH CRC mask $< x_{ant,0}, x_{ant,1}, ..., x_{ant,15} >$
1	<0, 0, 0, 0, 0, 0, 0, 0, 0, 0, 0, 0, 0, 0, 0, 0>
2	<1, 1, 1, 1, 1, 1, 1, 1, 1, 1, 1, 1, 1, 1, 1, 1>
4	<0, 1, 0, 1, 0, 1, 0, 1, 0, 1, 0, 1, 0, 1, 0, 1>

5.3.1.2 Channel coding

Information bits are delivered to the channel coding block. They are denoted by $c_0, c_1, c_2, c_3, ..., c_{K-1}$, where K is the number of bits, and they are tail biting convolutionally encoded according to section 5.1.3.1.

After encoding the bits are denoted by $d_0^{(i)}, d_1^{(i)}, d_2^{(i)}, d_3^{(i)}, ..., d_{D-1}^{(i)}$, with $i = 0,1,$ and 2 , and where D is the number of bits on the i-th coded stream, i.e., $D = K$.

5.3.1.3 Rate matching

A tail biting convolutionally coded block is delivered to the rate matching block. This block of coded bits is denoted by $d_0^{(i)}, d_1^{(i)}, d_2^{(i)}, d_3^{(i)}, ..., d_{D-1}^{(i)}$, with $i = 0,1,$ and 2 , and where i is the coded stream index and D is the number of bits in each coded stream. This coded block is rate matched according to section 5.1.4.2.

After rate matching, the bits are denoted by $e_0, e_1, e_2, e_3, ..., e_{E-1}$, where E is the number of rate matched bits as defined in section 6.6.1 of [2].

5.3.2 Downlink shared channel, Paging channel and Multicast channel

Figure 5.3.2-1 shows the processing structure for each transport block for the DL-SCH, PCH and MCH transport channels. Data arrives to the coding unit in the form of a maximum of two transport blocks every transmission time interval (TTI) per DL cell. The following coding steps can be identified for each transport block of a DL cell:

- Add CRC to the transport block
- Code block segmentation and code block CRC attachment
- Channel coding
- Rate matching
- Code block concatenation

The coding steps for PCH and MCH transport channels, and for one transport block of DL-SCH are shown in the figure below. The same processing applies for each transport block on each DL cell.

Samsung Exhibit 1017, Page 89 of 121

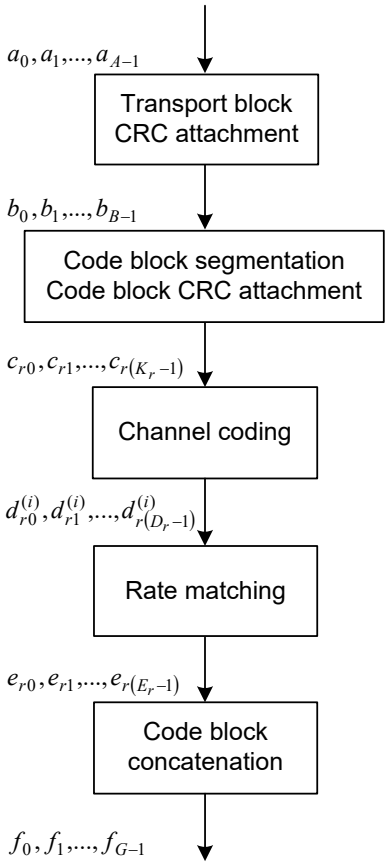

Figure 5.3.2-1: Transport block processing for DL-SCH, PCH and MCH.

5.3.2.1 Transport block CRC attachment

Error detection is provided on transport blocks through a Cyclic Redundancy Check (CRC).

The entire transport block is used to calculate the CRC parity bits. Denote the bits in a transport block delivered to layer 1 by $a_0, a_1, a_2, a_3, ..., a_{A-1}$, and the parity bits by $p_0, p_1, p_2, p_3, ..., p_{L-1}$. A is the size of the transport block and L is the number of parity bits. The lowest order information bit a_0 is mapped to the most significant bit of the transport block as defined in section 6.1.1 of [5].

The parity bits are computed and attached to the transport block according to section 5.1.1 setting L to 24 bits and using the generator polynomial $g_{CRC24A}(D)$.

5.3.2.2 Code block segmentation and code block CRC attachment

The bits input to the code block segmentation are denoted by $b_0, b_1, b_2, b_3, ..., b_{B-1}$ where B is the number of bits in the transport block (including CRC).

Code block segmentation and code block CRC attachment are performed according to section 5.1.2.

The bits after code block segmentation are denoted by $c_{r0}, c_{r1}, c_{r2}, c_{r3}, ..., c_{r(K_r-1)}$, where r is the code block number and K_r is the number of bits for code block number r.

Samsung Exhibit 1017, Page 90 of 121

5.3.2.3 Channel coding

Code blocks are delivered to the channel coding block. They are denoted by $c_{r0}, c_{r1}, c_{r2}, c_{r3}, ..., c_{r(K_r-1)}$, where r is the code block number, and K_r is the number of bits in code block number r. The total number of code blocks is denoted by C and each code block is individually turbo encoded according to section 5.1.3.2.

After encoding the bits are denoted by $d_{r0}^{(i)}, d_{r1}^{(i)}, d_{r2}^{(i)}, d_{r3}^{(i)}, ..., d_{r(D_r-1)}^{(i)}$, with $i = 0,1,$ and 2 , and where D_r is the number of bits on the i-th coded stream for code block number r, i.e. $D_r = K_r + 4$.

5.3.2.4 Rate matching

Turbo coded blocks are delivered to the rate matching block. They are denoted by $d_{r0}^{(i)}, d_{r1}^{(i)}, d_{r2}^{(i)}, d_{r3}^{(i)}, ..., d_{r(D_r-1)}^{(i)}$, with $i = 0,1,$ and 2 , and where r is the code block number, i is the coded stream index, and D_r is the number of bits in each coded stream of code block number r. The total number of code blocks is denoted by C and each coded block is individually rate matched according to section 5.1.4.1.

After rate matching, the bits are denoted by $e_{r0}, e_{r1}, e_{r2}, e_{r3}, ..., e_{r(E_r-1)}$, where r is the coded block number, and where E_r is the number of rate matched bits for code block number r.

5.3.2.5 Code block concatenation

The bits input to the code block concatenation block are denoted by $e_{r0}, e_{r1}, e_{r2}, e_{r3}, ..., e_{r(E_r-1)}$ for $r = 0,..., C-1$ and where E_r is the number of rate matched bits for the r-th code block.

Code block concatenation is performed according to section 5.1.5.

The bits after code block concatenation are denoted by $f_0, f_1, f_2, f_3, ..., f_{G-1}$, where G is the total number of coded bits for transmission. This sequence of coded bits corresponding to one transport block after code block concatenation is referred to as one codeword in section 6.3.1 of [2]. In case of multiple transport blocks per TTI, the transport block to codeword mapping is specified according to section 5.3.3.1.5, 5.3.3.1.5A or 5.3.3.1.5B, depending on the DCI Format.

5.3.3 Downlink control information

A DCI transports downlink, uplink or sidelink scheduling information, requests for aperiodic CQI reports, LAA common information, notifications of MCCH change [6] or uplink power control commands for one cell and one RNTI. The RNTI is implicitly encoded in the CRC.

Figure 5.3.3-1 shows the processing structure for one DCI. The following coding steps can be identified:

- Information element multiplexing
- CRC attachment
- Channel coding
- Rate matching

The coding steps for DCI are shown in the figure below.

Samsung Exhibit 1017, Page 91 of 121

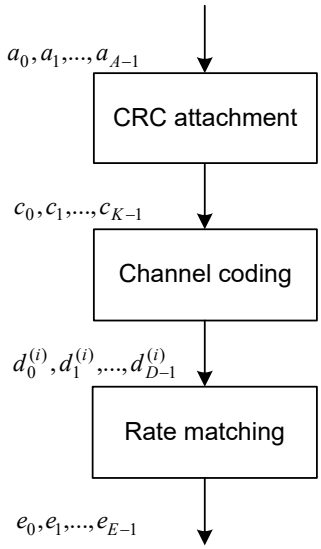

Figure 5.3.3-1: Processing for one DCI.

5.3.3.1 DCI formats

The fields defined in the DCI formats below are mapped to the information bits a_0 to a_{A-1} as follows.

Each field is mapped in the order in which it appears in the description, including the zero-padding bit(s), if any, with the first field mapped to the lowest order information bit a_0 and each successive field mapped to higher order information bits. The most significant bit of each field is mapped to the lowest order information bit for that field, e.g. the most significant bit of the first field is mapped to a_0.

5.3.3.1.1 Format 0

DCI format 0 is used for the scheduling of PUSCH in one UL cell.

The following information is transmitted by means of the DCI format 0:

- Carrier indicator – 0 or 3 bits. This field is present according to the definitions in [3].
- Flag for format0/format1A differentiation – 1 bit, where value 0 indicates format 0 and value 1 indicates format 1A
- Frequency hopping flag – 1 bit as defined in section 8.4 of [3]. This field is used as the MSB of the corresponding resource allocation field for resource allocation type 1.
- Resource block assignment and hopping resource allocation – $\left\lceil \log_2(N_{\mathrm{RB}}^{\mathrm{UL}}(N_{\mathrm{RB}}^{\mathrm{UL}}+1)/2) \right\rceil$ bits
  - For PUSCH hopping (resource allocation type 0 only):
    - N_{UL_hop} MSB bits are used to obtain the value of $\tilde{n}_{PRB}(i)$ as indicated in section 8.4 of [3]
    - $\left(\left\lceil \log_2(N_{\mathrm{RB}}^{\mathrm{UL}}(N_{\mathrm{RB}}^{\mathrm{UL}}+1)/2) \right\rceil - N_{\mathrm{UL_hop}} \right)$ bits provide the resource allocation of the first slot in the UL subframe
  - For non-hopping PUSCH with resource allocation type 0:
    - $\left(\left\lceil \log_2(N_{\mathrm{RB}}^{\mathrm{UL}}(N_{\mathrm{RB}}^{\mathrm{UL}}+1)/2) \right\rceil \right)$ bits provide the resource allocation in the UL subframe as defined in section 8.1.1 of [3]
  - For non-hopping PUSCH with resource allocation type 1:

Samsung Exhibit 1017, Page 92 of 121

- The concatenation of the frequency hopping flag field and the resource block assignment and hopping resource allocation field provides the resource allocation field in the UL subframe as defined in section 8.1.2 of [3]

- Modulation and coding scheme and redundancy version – 5 bits as defined in section 8.6 of [3]

- New data indicator – 1 bit

- TPC command for scheduled PUSCH – 2 bits as defined in section 5.1.1.1 of [3]

- Cyclic shift for DM RS and OCC index – 3 bits as defined in section 5.5.2.1.1 of [2]

- UL index – 2 bits as defined in sections 5.1.1.1, 7.2.1, 8 and 8.4 of [3] (this field is present only for TDD operation with uplink-downlink configuration 0)

- Downlink Assignment Index (DAI) – 2 bits as defined in section 7.3 of [3] (this field is present only for cases with TDD primary cell and either TDD operation with uplink-downlink configurations 1-6 or FDD operation)

- CSI request – 1, 2 or 3 bits as defined in section 7.2.1 of [3]. The 2-bit field applies to UEs configured with no more than five DL cells and to

  - UEs that are configured with more than one DL cell and when the corresponding DCI format is mapped onto the UE specific search space given by the C-RNTI as defined in [3];

  - UEs that are configured by higher layers with more than one CSI process and when the corresponding DCI format is mapped onto the UE specific search space given by the C-RNTI as defined in [3];

  - UEs that are configured with two CSI measurement sets by higher layers with the parameter *csi-MeasSubframeSet,* and when the corresponding DCI format is mapped onto the UE specific search space given by the C-RNTI as defined in [3];

  the 3-bit field applies to UEs that are configured with more than five DL cells and when the corresponding DCI format is mapped onto the UE specific search space given by the C-RNTI as defined in [3];

  otherwise the 1-bit field applies

- SRS request – 0 or 1 bit. This field can only be present in DCI formats scheduling PUSCH which are mapped onto the UE specific search space given by the C-RNTI as defined in [3]. The interpretation of this field is provided in section 8.2 of [3]

- Resource allocation type – 1 bit. This field is only present if $N_{\mathrm{RB}}^{\mathrm{UL}} \le N_{\mathrm{RB}}^{\mathrm{DL}}$. The interpretation of this field is provided in section 8.1 of [3]

If the number of information bits in format 0 mapped onto a given search space is less than the payload size of format 1A for scheduling the same serving cell and mapped onto the same search space (including any padding bits appended to format 1A), zeros shall be appended to format 0 until the payload size equals that of format 1A.

5.3.3.1.2 Format 1

DCI format 1 is used for the scheduling of one PDSCH codeword in one cell.

The following information is transmitted by means of the DCI format 1:

- Carrier indicator – 0 or 3 bits. This field is present according to the definitions in [3].

- Resource allocation header (resource allocation type 0 / type 1) – 1 bit as defined in section 7.1.6 of [3]

  If downlink bandwidth is less than or equal to 10 PRBs, there is no resource allocation header and resource allocation type 0 is assumed.

- Resource block assignment:

  - For resource allocation type 0 as defined in section 7.1.6.1 of [3]:

    - $\left\lceil N_{\mathrm{RB}}^{\mathrm{DL}} / P \right\rceil$ bits provide the resource allocation

Samsung Exhibit 1017, Page 93 of 121

- For resource allocation type 1 as defined in section 7.1.6.2 of [3]:

  - $\lceil \log_2(P) \rceil$ bits of this field are used as a header specific to this resource allocation type to indicate the selected resource blocks subset

  - 1 bit indicates a shift of the resource allocation span

  - $\left(\lceil N_{\mathrm{RB}}^{\mathrm{DL}} / P \rceil - \lceil \log_2(P) \rceil - 1 \right)$ bits provide the resource allocation

  where the value of P depends on the number of DL resource blocks as indicated in section 7.1.6.1 of [3]

- Modulation and coding scheme – 5 bits as defined in section 7.1.7 of [3]

- HARQ process number – 3 bits (for cases with FDD primary cell), 4 bits (for cases with TDD primary cell)

- New data indicator – 1 bit

- Redundancy version – 2 bits

- TPC command for PUCCH – 2 bits as defined in section 5.1.2.1 of [3]

- Downlink Assignment Index – number of bits as specified in Table 5.3.3.1.2-2.

- HARQ-ACK resource offset (this field is present when this format is carried by EPDCCH. This field is not present when this format is carried by PDCCH) – 2 bits as defined in section 10.1 of [3]. The 2 bits are set to 0 when this format is carried by EPDCCH on a secondary cell, or when this format is carried by EPDCCH on the primary cell scheduling PDSCH on a secondary cell and the UE is configured with PUCCH format 3 for HARQ-ACK feedback.

If the UE is not configured to decode PDCCH or EPDCCH with CRC scrambled by the C-RNTI and the number of information bits in format 1 is equal to that for format 0/1A, one bit of value zero shall be appended to format 1.

If the UE is configured to decode PDCCH or EPDCCH with CRC scrambled by the C-RNTI and the number of information bits in format 1 is equal to that for format 0/1A for scheduling the same serving cell and mapped onto the UE specific search space given by the C-RNTI as defined in [3], one bit of value zero shall be appended to format 1.

If the number of information bits in format 1 carried by PDCCH belongs to one of the sizes in Table 5.3.3.1.2-1, one or more zero bit(s) shall be appended to format 1 until the payload size of format 1 does not belong to one of the sizes in Table 5.3.3.1.2-1 and is not equal to that of format 0/1A mapped onto the same search space.

Table 5.3.3.1.2-1: Ambiguous Sizes of Information Bits.

{12, 14, 16 ,20, 24, 26, 32, 40, 44, 56}

Samsung Exhibit 1017, Page 94 of 121

Table 5.3.3.1.2-2: Number of bits for Downlink Assignment Index.

Number of bits	
4	For UEs configured by higher layers with *codebooksizeDetermination-r13 = 0*, the 4-bit DAI further consists of a 2-bit counter DAI and a 2-bit total DAI. - Counter DAI – 2 bits as defined in section 7.3 of [3] - Total DAI – 2 bits as defined in section 7.3 of [3]
2	For UEs configured with no more than five DL cells, or for UEs configured by higher layers with *codebooksizeDetermination-r13 = 1*, this field is present for FDD or TDD operation, for cases with TDD primary cell. If the UL/DL configuration of all TDD serving cells is same and the UE is not configured to decode PDCCH with CRC scrambled by *eimta-RNTI*, then this field only applies to serving cell with UL/DL configuration 1-6 If at least two TDD serving cells have different UL/DL configurations or the UE is configured to decode PDCCH with CRC scrambled by *eimta-RNTI*, then this field applies to a serving cell with DL-reference UL/DL configuration 1-6 as defined in section 10.2 of [3]
0	For UEs configured with no more than five DL cells, or for UEs configured by higher layers with *codebooksizeDetermination-r13 = 1*, this field is not present for FDD or TDD operation, for cases with FDD primary cell.

5.3.3.1.3 Format 1A

DCI format 1A is used for the compact scheduling of one PDSCH codeword in one cell and random access procedure initiated by a PDCCH order. The DCI corresponding to a PDCCH order can be carried by PDCCH or EPDCCH.

The following information is transmitted by means of the DCI format 1A:

- Carrier indicator – 0 or 3 bits. This field is present according to the definitions in [3].

- Flag for format0/format1A differentiation – 1 bit, where value 0 indicates format 0 and value 1 indicates format 1A

Format 1A is used for random access procedure initiated by a PDCCH order only if format 1A CRC is scrambled with C-RNTI and all the remaining fields are set as follows:

- Localized/Distributed VRB assignment flag – 1 bit is set to '0'

- Resource block assignment – $\left\lceil \log_2(N_{\mathrm{RB}}^{\mathrm{DL}}(N_{\mathrm{RB}}^{\mathrm{DL}}+1)/2) \right\rceil$ bits, where all bits shall be set to 1

- Preamble Index – 6 bits

- PRACH Mask Index – 4 bits, [5]

- All the remaining bits in format 1A for compact scheduling assignment of one PDSCH codeword are set to zero

Otherwise,

- Localized/Distributed VRB assignment flag – 1 bit as defined in 7.1.6.3 of [3]

- Resource block assignment – $\left\lceil \log_2(N_{\mathrm{RB}}^{\mathrm{DL}}(N_{\mathrm{RB}}^{\mathrm{DL}}+1)/2) \right\rceil$ bits as defined in section 7.1.6.3 of [3]:

  - For localized VRB:

    $\left\lceil \log_2(N_{\mathrm{RB}}^{\mathrm{DL}}(N_{\mathrm{RB}}^{\mathrm{DL}}+1)/2) \right\rceil$ bits provide the resource allocation

  - For distributed VRB:

Samsung Exhibit 1017, Page 95 of 121

- If $N_{\mathrm{RB}}^{\mathrm{DL}} < 50$ or if the format 1A CRC is scrambled by RA-RNTI, P-RNTI, SI-RNTI, SC-RNTI or G-RNTI:

  - $\lceil \log_2(N_{\mathrm{RB}}^{\mathrm{DL}}(N_{\mathrm{RB}}^{\mathrm{DL}}+1)/2) \rceil$ bits provide the resource allocation

- Else

  - 1 bit, the MSB indicates the gap value, where value 0 indicates $N_{\mathrm{gap}} = N_{\mathrm{gap},1}$ and value 1 indicates $N_{\mathrm{gap}} = N_{\mathrm{gap},2}$

  - $(\lceil \log_2(N_{\mathrm{RB}}^{\mathrm{DL}}(N_{\mathrm{RB}}^{\mathrm{DL}}+1)/2) \rceil - 1)$ bits provide the resource allocation,

where N_{gap} is defined in [2].

- Modulation and coding scheme – 5bits as defined in section 7.1.7 of [3]
- HARQ process number – 3 bits (for cases with FDD primary cell) , 4 bits (for cases with TDD primary cell)
- New data indicator – 1 bit
  - If the format 1A CRC is scrambled by RA-RNTI, P-RNTI, SI-RNTI, SC-RNTI or G-RNTI:
    - If $N_{\mathrm{RB}}^{\mathrm{DL}} \geq 50$ and Localized/Distributed VRB assignment flag is set to 1
      - the new data indicator bit indicates the gap value, where value 0 indicates $N_{\mathrm{gap}} = N_{\mathrm{gap},1}$ and value 1 indicates $N_{\mathrm{gap}} = N_{\mathrm{gap},2}$.
    - Else the new data indicator bit is reserved.
  - Else
    - The new data indicator bit as defined in [5]
- Redundancy version – 2 bits
- TPC command for PUCCH – 2 bits as defined in section 5.1.2.1 of [3]
  - If the format 1A CRC is scrambled by RA-RNTI, P-RNTI, or SI-RNTI:
    - The most significant bit of the TPC command is reserved.
    - The least significant bit of the TPC command indicates column $N_{\mathrm{PRB}}^{\mathrm{1A}}$ of the TBS table defined of [3].
    - If least significant bit is 0 then $N_{\mathrm{PRB}}^{\mathrm{1A}} = 2$ else $N_{\mathrm{PRB}}^{\mathrm{1A}} = 3$.
  - Else
    - The two bits including the most significant bit indicates the TPC command
- Downlink Assignment Index – number of bits as specified in Table 5.3.3.1.2-2.
- SRS request – 0 or 1 bit. This field can only be present in DCI formats scheduling PDSCH which are mapped onto the UE specific search space given by the C-RNTI as defined in [3]. The interpretation of this field is provided in section 8.2 of [3]
- HARQ-ACK resource offset (this field is present when this format is carried by EPDCCH. This field is not present when this format is carried by PDCCH) – 2 bits as defined in section 10.1 of [3]. The 2 bits are set to 0 when this format is carried by EPDCCH on a secondary cell, or when this format is carried by EPDCCH on the primary cell scheduling PDSCH on a secondary cell and the UE is configured with PUCCH format 3 for HARQ-ACK feedback.

Samsung Exhibit 1017, Page 96 of 121

If the UE is not configured to decode PDCCH or EPDCCH with CRC scrambled by the C-RNTI, and the number of information bits in format 1A is less than that of format 0, zeros shall be appended to format 1A until the payload size equals that of format 0.

If the UE is configured to decode PDCCH or EPDCCH with CRC scrambled by the C-RNTI and the number of information bits in format 1A mapped onto a given search space is less than that of format 0 for scheduling the same serving cell and mapped onto the same search space, zeros shall be appended to format 1A until the payload size equals that of format 0, except when format 1A assigns downlink resource on a secondary cell without an uplink configuration associated with the secondary cell.

If the number of information bits in format 1A carried by PDCCH belongs to one of the sizes in Table 5.3.3.1.2-1, one zero bit shall be appended to format 1A.

When the format 1A CRC is scrambled with a RA-RNTI, P-RNTI, SI-RNTI, SC-RNTI or G-RNTI then the following fields among the fields above are reserved:

- HARQ process number
- Downlink Assignment Index (used for cases with TDD primary cell and either FDD operation or TDD operation, and is not present for cases with FDD primary cell and either FDD operation or TDD operation)

5.3.3.1.3A Format 1B

DCI format 1B is used for the compact scheduling of one PDSCH codeword in one cell with precoding information.

The following information is transmitted by means of the DCI format 1B:

- Carrier indicator – 0 or 3 bits. The field is present according to the definitions in [3].
- Localized/Distributed VRB assignment flag – 1 bit as defined in section 7.1.6.3 of [3]
- Resource block assignment – $\lceil \log_2(N_{\mathrm{RB}}^{\mathrm{DL}}(N_{\mathrm{RB}}^{\mathrm{DL}}+1)/2) \rceil$ bits as defined in section 7.1.6.3 of [3]
  - For localized VRB:

    $\lceil \log_2(N_{\mathrm{RB}}^{\mathrm{DL}}(N_{\mathrm{RB}}^{\mathrm{DL}}+1)/2) \rceil$ bits provide the resource allocation
  - For distributed VRB:
    - For $N_{\mathrm{RB}}^{\mathrm{DL}} < 50$
      - $\lceil \log_2(N_{\mathrm{RB}}^{\mathrm{DL}}(N_{\mathrm{RB}}^{\mathrm{DL}}+1)/2) \rceil$ bits provide the resource allocation
    - For $N_{\mathrm{RB}}^{\mathrm{DL}} \geq 50$
      - 1 bit, the MSB indicates the gap value, where value 0 indicates $N_{\mathrm{gap}} = N_{\mathrm{gap,1}}$ and value 1 indicates $N_{\mathrm{gap}} = N_{\mathrm{gap,2}}$
      - $(\lceil \log_2(N_{\mathrm{RB}}^{\mathrm{DL}}(N_{\mathrm{RB}}^{\mathrm{DL}}+1)/2) \rceil - 1)$ bits provide the resource allocation
- Modulation and coding scheme – 5bits as defined in section 7.1.7 of [3]
- HARQ process number – 3 bits (for cases with FDD primary cell) , 4 bits (for cases with TDD primary cell)
- New data indicator – 1 bit
- Redundancy version – 2 bits
- TPC command for PUCCH – 2 bits as defined in section 5.1.2.1 of [3]
- Downlink Assignment Index – number of bits as specified in Table 5.3.3.1.2-2.

Samsung Exhibit 1017, Page 97 of 121

- TPMI information for precoding – number of bits as specified in Table 5.3.3.1.3A-1

  TPMI information indicates which codebook index is used in Table 6.3.4.2.3-1 or Table 6.3.4.2.3-2 of [2] corresponding to the single-layer transmission.

- PMI confirmation for precoding – 1 bit as specified in Table 5.3.3.1.3A-2

- HARQ-ACK resource offset (this field is present when this format is carried by EPDCCH. This field is not present when this format is carried by PDCCH) – 2 bits as defined in section 10.1 of [3]. The 2 bits are set to 0 when this format is carried by EPDCCH on a secondary cell, or when this format is carried by EPDCCH on the primary cell scheduling PDSCH on a secondary cell and the UE is configured with PUCCH format 3 for HARQ-ACK feedback.

If PMI confirmation indicates that the eNodeB has applied precoding according to PMI(s) reported by the UE, the precoding for the corresponding RB(s) in subframe *n* is according to the latest PMI(s) in an aperiodic CSI reported on or before subframe *n*-4.

Table 5.3.3.1.3A-1: Number of bits for TPMI information.

Number of antenna ports at eNodeB	Number of bits
2	2
4	4

Table 5.3.3.1.3A-2: Content of PMI confirmation.

Bit field mapped to index	Message
0	Precoding according to the indicated TPMI in the TPMI information field
1	Precoding using the precoder(s) according to PMI(s) indicated in the latest aperiodic CSI report. For aperiodic CSI mode 2-2: - Precoding of scheduled resource blocks belonging to the reported preferred M subband(s), use precoder(s) according to the preferred M subband PMI(s) indicated in the latest aperiodic CSI report; - Precoding of scheduled resource blocks not belonging to the reported preferred M subband(s), precoding using a precoder according to the wideband PMI indicated in the latest aperiodic CSI report.

If the number of information bits in format 1B is equal to that for format 0/1A for scheduling the same serving cell and mapped onto the UE specific search space given by the C-RNTI as defined in [3], one bit of value zero shall be appended to format 1B.

If the number of information bits in format 1B carried by PDCCH belongs to one of the sizes in Table 5.3.3.1.2-1, one or more zero bit(s) shall be appended to format 1B until the payload size of format 1B does not belong to one of the sizes in Table 5.3.3.1.2-1 and is not equal to that of format 0/1A mapped onto the same search space.

5.3.3.1.4 Format 1C

DCI format 1C is used for very compact scheduling of one PDSCH codeword, notifying MCCH change [6], notifying SC-MCCH change [6] , reconfiguring TDD, and LAA common information.

The following information is transmitted by means of the DCI format 1C:

If the format 1C is used for very compact scheduling of one PDSCH codeword

- 1 bit indicates the gap value, where value 0 indicates $N_{\text{gap}} = N_{\text{gap},1}$ and value 1 indicates $N_{\text{gap}} = N_{\text{gap},2}$

Samsung Exhibit 1017, Page 98 of 121

- For $N_{\mathrm{RB}}^{\mathrm{DL}} < 50$, there is no bit for gap indication
- Resource block assignment – $\left\lceil \log_2\left(\left\lfloor N_{\mathrm{VRB,gap1}}^{\mathrm{DL}} / N_{\mathrm{RB}}^{\mathrm{step}} \right\rfloor \cdot \left(\left\lfloor N_{\mathrm{VRB,gap1}}^{\mathrm{DL}} / N_{\mathrm{RB}}^{\mathrm{step}} \right\rfloor + 1\right)/2\right)\right\rceil$ bits as defined in 7.1.6.3 of [3] where $N_{\mathrm{VRB,gap1}}^{\mathrm{DL}}$ is defined in [2] and $N_{\mathrm{RB}}^{\mathrm{step}}$ is defined in [3]
- Modulation and coding scheme – 5 bits as defined in section 7.1.7 of [3]

Else if the format 1C is used for notifying MCCH change

- Information for MCCH change notification – 8 bits as defined in section 5.8.1.3 of [6]
- Reserved information bits are added until the size is equal to that of format 1C used for very compact scheduling of one PDSCH codeword

Else if the format 1C is used for notifying SC-MCCH change

- Information for SC-MCCH change notification – 8 bits as defined in section 5.8a.1.3 of [6]
- Reserved information bits are added until the size is equal to that of format 1C used for very compact scheduling of one PDSCH codeword

Else if the format 1C is used for reconfiguring TDD

- UL/DL configuration indication:

  UL/DL configuration number 1, UL/DL configuration number 2,…, UL/DL configuration number *I*

  Where each UL/DL configuration is 3 bits, $I = \left\lfloor \frac{L_{\mathrm{format\,1c}}}{3} \right\rfloor$, $L_{\mathrm{format\,1c}}$ is equal to the payload size of format 1C used for very compact scheduling of one PDSCH codeword. The parameter *eimta-UL-DL-ConfigIndex* provided by higher layers determines the index to the UL/DL configuration indication for a serving cell.
- Zeros are added until the size is equal to that of format 1C used for very compact scheduling of one PDSCH codeword

Else

- Subframe configuration for LAA – 4 bits as defined in section x.y.z of [3]
- Reserved information bits are added until the size is equal to that of format 1C used for very compact scheduling of one PDSCH codeword

5.3.3.1.4A Format 1D

DCI format 1D is used for the compact scheduling of one PDSCH codeword in one cell with precoding and power offset information.

The following information is transmitted by means of the DCI format 1D:

- Carrier indicator – 0 or 3 bits. The field is present according to the definitions in [3].
- Localized/Distributed VRB assignment flag – 1 bit as defined in section 7.1.6.3 of [3]
- Resource block assignment – $\left\lceil \log_2(N_{\mathrm{RB}}^{\mathrm{DL}}(N_{\mathrm{RB}}^{\mathrm{DL}}+1)/2) \right\rceil$ bits as defined in section 7.1.6.3 of [3]:
  - For localized VRB:

    $\left\lceil \log_2(N_{\mathrm{RB}}^{\mathrm{DL}}(N_{\mathrm{RB}}^{\mathrm{DL}}+1)/2) \right\rceil$ bits provide the resource allocation
  - For distributed VRB:
    - For $N_{\mathrm{RB}}^{\mathrm{DL}} < 50$

- $\lceil \log_2(N_{\mathrm{RB}}^{\mathrm{DL}}(N_{\mathrm{RB}}^{\mathrm{DL}}+1)/2) \rceil$ bits provide the resource allocation

- For $N_{\mathrm{RB}}^{\mathrm{DL}} \geq 50$

  - 1 bit, the MSB indicates the gap value, where value 0 indicates $N_{\mathrm{gap}} = N_{\mathrm{gap,1}}$ and value 1 indicates $N_{\mathrm{gap}} = N_{\mathrm{gap,2}}$

  - $(\lceil \log_2(N_{\mathrm{RB}}^{\mathrm{DL}}(N_{\mathrm{RB}}^{\mathrm{DL}}+1)/2) \rceil - 1)$ bits provide the resource allocation

- Modulation and coding scheme – 5bits as defined in section 7.1.7 of [3]

- HARQ process number – 3 bits (for cases with FDD primary cell), 4 bits (for cases with TDD primary cell)

- New data indicator – 1 bit

- Redundancy version – 2 bits

- TPC command for PUCCH – 2 bits as defined in section 5.1.2.1 of [3]

- Downlink Assignment Index – number of bits as specified in Table 5.3.3.1.2-2.

- TPMI information for precoding – number of bits as specified in Table 5.3.3.1.4A-1

  TPMI information indicates which codebook index is used in Table 6.3.4.2.3-1 or Table 6.3.4.2.3-2 of [2] corresponding to the single-layer transmission.

- Downlink power offset – 1 bit as defined in section 7.1.5 of [3]

- HARQ-ACK resource offset (this field is present when this format is carried by EPDCCH. This field is not present when this format is carried by PDCCH) – 2 bits as defined in section 10.1 of [3]. The 2 bits are set to 0 when this format is carried by EPDCCH on a secondary cell, or when this format is carried by EPDCCH on the primary cell scheduling PDSCH on a secondary cell and the UE is configured with PUCCH format 3 for HARQ-ACK feedback.

Table 5.3.3.1.4A-1: Number of bits for TPMI information.

Number of antenna ports at eNodeB	Number of bits
2	2
4	4

If the number of information bits in format 1D is equal to that for format 0/1A for scheduling the same serving cell and mapped onto the UE specific search space given by the C-RNTI as defined in [3], one bit of value zero shall be appended to format 1D.

If the number of information bits in format 1D carried by PDCCH belongs to one of the sizes in Table 5.3.3.1.2-1, one or more zero bit(s) shall be appended to format 1D until the payload size of format 1D does not belong to one of the sizes in Table 5.3.3.1.2-1 and is not equal to that of format 0/1A mapped onto the same search space.

5.3.3.1.5 Format 2

The following information is transmitted by means of the DCI format 2:

- Carrier indicator – 0 or 3 bits. The field is present according to the definitions in [3].

- Resource allocation header (resource allocation type 0 / type 1) – 1 bit as defined in section 7.1.6 of [3]

If downlink bandwidth is less than or equal to 10 PRBs, there is no resource allocation header and resource allocation type 0 is assumed.

- Resource block assignment:

Samsung Exhibit 1017, Page 100 of 121

- For resource allocation type 0 defined in section 7.1.6.1 of [3]:

  - $\left\lceil N_{\mathrm{RB}}^{\mathrm{DL}} / P \right\rceil$ bits provide the resource allocation

- For resource allocation type 1 as defined in section 7.1.6.2 of [3]:

  - $\left\lceil \log_2(P) \right\rceil$ bits of this field are used as a header specific to this resource allocation type to indicate the selected resource blocks subset

  - 1 bit indicates a shift of the resource allocation span

  - $\left(\left\lceil N_{\mathrm{RB}}^{\mathrm{DL}} / P \right\rceil - \left\lceil \log_2(P) \right\rceil - 1 \right)$ bits provide the resource allocation

where the value of P depends on the number of DL resource blocks as indicated in section 7.1.6.1 of [3]

- TPC command for PUCCH – 2 bits as defined in section 5.1.2.1 of [3]

- Downlink Assignment Index – number of bits as specified in Table 5.3.3.1.2-2.

- HARQ process number - 3 bits (for cases with FDD primary cell), 4 bits (for cases with TDD primary cell)

- Transport block to codeword swap flag – 1 bit

In addition, for transport block 1:

- Modulation and coding scheme – 5 bits as defined in section 7.1.7 of [3]

- New data indicator – 1 bit

- Redundancy version – 2 bits

In addition, for transport block 2:

- Modulation and coding scheme – 5 bits as defined in section 7.1.7 of [3]

- New data indicator – 1 bit

- Redundancy version – 2 bits

- Precoding information – number of bits as specified in Table 5.3.3.1.5-3

- HARQ-ACK resource offset (this field is present when this format is carried by EPDCCH. This field is not present when this format is carried by PDCCH) – 2 bits as defined in section 10.1 of [3]. The 2 bits are set to 0 when this format is carried by EPDCCH on a secondary cell, or when this format is carried by EPDCCH on the primary cell scheduling PDSCH on a secondary cell and the UE is configured with PUCCH format 3 for HARQ-ACK feedback.

If both transport blocks are enabled, the transport block to codeword mapping is specified according to Table 5.3.3.1.5-1.

In case one of the transport blocks is disabled as specified in section 7.1.7.2 of [3], the transport block to codeword swap flag is reserved and the transport block to codeword mapping is specified according to Table 5.3.3.1.5-2.

Table 5.3.3.1.5-1: Transport block to codeword mapping (two transport blocks enabled).

transport block to codeword swap flag value	codeword 0 (enabled)	codeword 1 (enabled)
0	transport block 1	transport block 2
1	transport block 2	transport block 1

Samsung Exhibit 1017, Page 101 of 121

Table 5.3.3.1.5-2: Transport block to codeword mapping (one transport block enabled).

transport block 1	transport block 2	codeword 0 (enabled)	codeword 1 (disabled)
enabled	disabled	transport block 1	-
disabled	enabled	transport block 2	-

The interpretation of the precoding information field depends on the number of enabled codewords according to Table 5.3.3.1.5-4 and Table 5.3.3.1.5-5. Note that TPMI indicates which codebook index is used in Table 6.3.4.2.3-1 or Table 6.3.4.2.3-2 of [2]. For a single enabled codeword, indices 18 to 34 inclusive in Table 5.3.3.1.5-5 are only supported for retransmission of the corresponding transport block if that transport block has previously been transmitted using two layers with closed-loop spatial multiplexing.

If the number of information bits in format 2 carried by PDCCH belongs to one of the sizes in Table 5.3.3.1.2-1, one zero bit shall be appended to format 2.

Some entries in Table 5.3.3.1.5-4 and Table 5.3.3.1.5-5 are used for indicating that the eNodeB has applied precoding according to PMI(s) reported by the UE. In these cases the precoding for the corresponding RB(s) in subframe *n* is according to the latest PMI(s) in an aperiodic CSI reported on or before subframe *n*-4. For aperiodic CSI mode 2-2: Precoding of scheduled resource blocks belonging to the reported preferred M subband(s) use precoder(s) according to the preferred M subband PMI indicated by the latest aperiodic CSI report; Precoding of scheduled resource blocks not belonging to the reported preferred M subband(s) use a precoder according to the wideband PMI indicated by the latest aperiodic CSI report.

Table 5.3.3.1.5-3: Number of bits for precoding information.

Number of antenna ports at eNodeB	Number of bits for precoding information
2	3
4	6

Samsung Exhibit 1017, Page 102 of 121

Table 5.3.3.1.5-4: Content of precoding information field for 2 antenna ports.

One codeword: Codeword 0 enabled, Codeword 1 disabled		Two codewords: Codeword 0 enabled, Codeword 1 enabled	
Bit field mapped to index	**Message**	**Bit field mapped to index**	**Message**
0	2 layers: Transmit diversity	0	2 layers: Precoding corresponding to precoder matrix $\frac{1}{2}\begin{bmatrix}1 & 1\\ 1 & -1\end{bmatrix}$
1	1 layer: Precoding corresponding to precoding vector $\begin{bmatrix}1 & 1\end{bmatrix}^T/\sqrt{2}$	1	2 layers: Precoding corresponding to precoder matrix $\frac{1}{2}\begin{bmatrix}1 & 1\\ j & -j\end{bmatrix}$
2	1 layer: Precoding corresponding to precoder vector $\begin{bmatrix}1 & -1\end{bmatrix}^T/\sqrt{2}$	2	2 layers: Precoding according to the latest PMI report on PUSCH, using the precoder(s) indicated by the reported PMI(s)
3	1 layer: Precoding corresponding to precoder vector $\begin{bmatrix}1 & j\end{bmatrix}^T/\sqrt{2}$	3	reserved
4	1 layer: Precoding corresponding to precoder vector $\begin{bmatrix}1 & -j\end{bmatrix}^T/\sqrt{2}$	4	reserved
5	1 layer: Precoding according to the latest PMI report on PUSCH, using the precoder(s) indicated by the reported PMI(s), if RI=2 was reported, using 1st column multiplied by $\sqrt{2}$ of all precoders implied by the reported PMI(s)	5	reserved
6	1 layer: Precoding according to the latest PMI report on PUSCH, using the precoder(s) indicated by the reported PMI(s), if RI=2 was reported, using 2nd column multiplied by $\sqrt{2}$ of all precoders implied by the reported PMI(s)	6	reserved
7	reserved	7	reserved

Samsung Exhibit 1017, Page 103 of 121

Table 5.3.3.1.5-5: Content of precoding information field for 4 antenna ports.

One codeword: Codeword 0 enabled, Codeword 1 disabled		Two codewords: Codeword 0 enabled, Codeword 1 enabled	
Bit field mapped to index	**Message**	**Bit field mapped to index**	**Message**
0	4 layers: Transmit diversity	0	2 layers: TPMI=0
1	1 layer: TPMI=0	1	2 layers: TPMI=1
2	1 layer: TPMI=1	⋮	⋮
⋮	⋮	15	2 layers: TPMI=15
16	1 layer: TPMI=15	16	2 layers: Precoding according to the latest PMI report on PUSCH using the precoder(s) indicated by the reported PMI(s)
17	1 layer: Precoding according to the latest PMI report on PUSCH using the precoder(s) indicated by the reported PMI(s)	17	3 layers: TPMI=0
18	2 layers: TPMI=0	18	3 layers: TPMI=1
19	2 layers: TPMI=1	⋮	⋮
⋮	⋮	32	3 layers: TPMI=15
33	2 layers: TPMI=15	33	3 layers: Precoding according to the latest PMI report on PUSCH using the precoder(s) indicated by the reported PMI(s)
34	2 layers: Precoding according to the latest PMI report on PUSCH using the precoder(s) indicated by the reported PMI(s)	34	4 layers: TPMI=0
35 – 63	reserved	35	4 layers: TPMI=1
		⋮	⋮
		49	4 layers: TPMI=15
		50	4 layers: Precoding according to the latest PMI report on PUSCH using the precoder(s) indicated by the reported PMI(s)
		51 – 63	Reserved

5.3.3.1.5A Format 2A

The following information is transmitted by means of the DCI format 2A:

- Carrier indicator – 0 or 3 bits. The field is present according to the definitions in [3].

Samsung Exhibit 1017, Page 104 of 121

- Resource allocation header (resource allocation type 0 / type 1) – 1 bit as defined in section 7.1.6 of [3]

  If downlink bandwidth is less than or equal to 10 PRBs, there is no resource allocation header and resource allocation type 0 is assumed.

- Resource block assignment:

  - For resource allocation type 0 as defined in section 7.1.6.1 of [3]

    - $\left\lceil N_{\mathrm{RB}}^{\mathrm{DL}} / P \right\rceil$ bits provide the resource allocation

  - For resource allocation type 1 as defined in section 7.1.6.2 of [3]

    - $\left\lceil \log_2(P) \right\rceil$ bits of this field are used as a header specific to this resource allocation type to indicate the selected resource blocks subset

    - 1 bit indicates a shift of the resource allocation span

    - $\left(\left\lceil N_{\mathrm{RB}}^{\mathrm{DL}} / P \right\rceil - \left\lceil \log_2(P) \right\rceil - 1 \right)$ bits provide the resource allocation

  where the value of P depends on the number of DL resource blocks as indicated in section 7.1.6.1 of [3]

- TPC command for PUCCH – 2 bits as defined in section 5.1.2.1 of [3]

- Downlink Assignment Index – number of bits as specified in Table 5.3.3.1.2-2.

- HARQ process number - 3 bits (for cases with FDD primary cell), 4 bits (for cases with TDD primary cell)

- Transport block to codeword swap flag – 1 bit

  In addition, for transport block 1:

  - Modulation and coding scheme – 5 bits as defined in section 7.1.7 of [3]

  - New data indicator – 1 bit

  - Redundancy version – 2 bits

  In addition, for transport block 2:

  - Modulation and coding scheme – 5 bits as defined in section 7.1.7 of [3]

  - New data indicator – 1 bit

  - Redundancy version – 2 bits

- Precoding information – number of bits as specified in Table 5.3.3.1.5A-1

- HARQ-ACK resource offset (this field is present when this format is carried by EPDCCH. This field is not present when this format is carried by PDCCH) – 2 bits as defined in section 10.1 of [3]. The 2 bits are set to 0 when this format is carried by EPDCCH on a secondary cell, or when this format is carried by EPDCCH on the primary cell scheduling PDSCH on a secondary cell and the UE is configured with PUCCH format 3 for HARQ-ACK feedback.

If both transport blocks are enabled, the transport block to codeword mapping is specified according to Table 5.3.3.1.5-1.

In case one of the transport blocks is disabled, the transport block to codeword swap flag is reserved and the transport block to codeword mapping is specified according to Table 5.3.3.1.5-2.

The precoding information field is defined according to Table 5.3.3.1.5A-2. For a single enabled codeword, index 1 in Table 5.3.3.1.5A-2 is only supported for retransmission of the corresponding transport block if that transport block has previously been transmitted using two layers with large delay CDD.

Samsung Exhibit 1017, Page 105 of 121

For transmission with 2 antenna ports, the precoding information field is not present. The number of transmission layers is equal to 2 if both codewords are enabled; transmit diversity is used if codeword 0 is enabled while codeword 1 is disabled.

If the number of information bits in format 2A carried by PDCCH belongs to one of the sizes in Table 5.3.3.1.2-1, one zero bit shall be appended to format 2A.

Table 5.3.3.1.5A-1: Number of bits for precoding information.

Number of antenna ports at eNodeB	Number of bits for precoding information
2	0
4	2

Table 5.3.3.1.5A-2: Content of precoding information field for 4 antenna ports.

One codeword: Codeword 0 enabled, Codeword 1 disabled		Two codewords: Codeword 0 enabled, Codeword 1 enabled	
Bit field mapped to index	**Message**	**Bit field mapped to index**	**Message**
0	4 layers: Transmit diversity	0	2 layers: precoder cycling with large delay CDD
1	2 layers: precoder cycling with large delay CDD	1	3 layers: precoder cycling with large delay CDD
2	reserved	2	4 layers: precoder cycling with large delay CDD
3	reserved	3	reserved

5.3.3.1.5B Format 2B

The following information is transmitted by means of the DCI format 2B:

- Carrier indicator – 0 or 3 bits. The field is present according to the definitions in [3].

- Resource allocation header (resource allocation type 0 / type 1) – 1 bit as defined in section 7.1.6 of [3]

  If downlink bandwidth is less than or equal to 10 PRBs, there is no resource allocation header and resource allocation type 0 is assumed.

- Resource block assignment:

  - For resource allocation type 0 as defined in section 7.1.6.1 of [3]

    - $\left\lceil N_{\mathrm{RB}}^{\mathrm{DL}} / P \right\rceil$ bits provide the resource allocation

  - For resource allocation type 1 as defined in section 7.1.6.2 of [3]

    - $\left\lceil \log_2(P) \right\rceil$ bits of this field are used as a header specific to this resource allocation type to indicate the selected resource blocks subset

    - 1 bit indicates a shift of the resource allocation span

    - $\left(\left\lceil N_{\mathrm{RB}}^{\mathrm{DL}} / P \right\rceil - \left\lceil \log_2(P) \right\rceil - 1 \right)$ bits provide the resource allocation

where the value of P depends on the number of DL resource blocks as indicated in section [7.1.6.1] of [3]

Samsung Exhibit 1017, Page 106 of 121

- TPC command for PUCCH – 2 bits as defined in section 5.1.2.1 of [3]

- Downlink Assignment Index – number of bits as specified in Table 5.3.3.1.2-2.

- HARQ process number - 3 bits (for cases with FDD primary cell), 4 bits (for cases with TDD primary cell)

- Scrambling identity– 1 bit as defined in section 6.10.3.1 of [2]

- SRS request – [0-1] bit. This field can only be present for TDD operation and if present is defined in section 8.2 of [3]

In addition, for transport block 1:

- Modulation and coding scheme – 5 bits as defined in section 7.1.7 of [3]

- New data indicator – 1 bit

- Redundancy version – 2 bits

In addition, for transport block 2:

- Modulation and coding scheme – 5 bits as defined in section 7.1.7 of [3]

- New data indicator – 1 bit

- Redundancy version – 2 bits

- HARQ-ACK resource offset (this field is present when this format is carried by EPDCCH. This field is not present when this format is carried by PDCCH) – 2 bits as defined in section 10.1 of [3]. The 2 bits are set to 0 when this format is carried by EPDCCH on a secondary cell, or when this format is carried by EPDCCH on the primary cell scheduling PDSCH on a secondary cell and the UE is configured with PUCCH format 3 for HARQ-ACK feedback.

If both transport blocks are enabled, the number of layers equals two; transport block 1 is mapped to codeword 0; and transport block 2 is mapped to codeword 1. Antenna ports 7 and 8 are used for spatial multiplexing.

In case one of the transport blocks is disabled, the number of layers equals one; the transport block to codeword mapping is specified according to Table 5.3.3.1.5-2; and the antenna port for single-antenna port transmission is according to Table 5.3.3.1.5B-1.

Table 5.3.3.1.5B-1: Antenna port for single-antenna port transmission (one transport block disabled).

New data indicator of the disabled transport block	Antenna port
0	7
1	8

If the number of information bits in format 2B carried by PDCCH belongs to one of the sizes in Table 5.3.3.1.2-1, one zero bit shall be appended to format 2B.

5.3.3.1.5C Format 2C

The following information is transmitted by means of the DCI format 2C:

- Carrier indicator – 0 or 3 bits. The field is present according to the definitions in [3].

- Resource allocation header (resource allocation type 0 / type 1) – 1 bit as defined in section 7.1.6 of [3]

  If downlink bandwidth is less than or equal to 10 PRBs, there is no resource allocation header and resource allocation type 0 is assumed.

- Resource block assignment:

  - For resource allocation type 0 as defined in section 7.1.6.1 of [3]

Samsung Exhibit 1017, Page 107 of 121

- $\left\lceil N_{\mathrm{RB}}^{\mathrm{DL}} / P \right\rceil$ bits provide the resource allocation

- For resource allocation type 1 as defined in section 7.1.6.2 of [3]

  - $\left\lceil \log_2(P) \right\rceil$ bits of this field are used as a header specific to this resource allocation type to indicate the selected resource blocks subset

  - 1 bit indicates a shift of the resource allocation span

  - $\left(\left\lceil N_{\mathrm{RB}}^{\mathrm{DL}} / P \right\rceil - \left\lceil \log_2(P) \right\rceil - 1 \right)$ bits provide the resource allocation

where the value of P depends on the number of DL resource blocks as indicated in section [7.1.6.1] of [3]

- TPC command for PUCCH – 2 bits as defined in section 5.1.2.1 of [3]

- Downlink Assignment Index – number of bits as specified in Table 5.3.3.1.2-2.

- HARQ process number - 3 bits (for cases with FDD primary cell), 4 bits (for cases with TDD primary cell)

- Antenna port(s), scrambling identity and number of layers – 3 bits as specified in Table 5.3.3.1.5C-1 where n_{SCID} is the scrambling identity for antenna ports 7 and 8 defined in section 6.10.3.1 of [2], or 4bits as specified in Table 5.3.3.1.5C-2 where n_{SCID} is the scrambling identity for antenna ports 7, 8, 11 and 13 defined in section 6.10.3.1 of [2] when higher layer parameter *Rel-13-DMRS-table* is set to 1.

- SRS request – [0-1] bit. This field can only be present for TDD operation and if present is defined in section 8.2 of [3]

In addition, for transport block 1:

- Modulation and coding scheme – 5 bits as defined in section 7.1.7 of [3]

- New data indicator – 1 bit

- Redundancy version – 2 bits

In addition, for transport block 2:

- Modulation and coding scheme – 5 bits as defined in section 7.1.7 of [3]

- New data indicator – 1 bit

- Redundancy version – 2 bits

- HARQ-ACK resource offset (this field is present when this format is carried by EPDCCH. This field is not present when this format is carried by PDCCH) – 2 bits as defined in section 10.1 of [3]. The 2 bits are set to 0 when this format is carried by EPDCCH on a secondary cell, or when this format is carried by EPDCCH on the primary cell scheduling PDSCH on a secondary cell and the UE is configured with PUCCH format 3 for HARQ-ACK feedback.

If both transport blocks are enabled; transport block 1 is mapped to codeword 0; and transport block 2 is mapped to codeword 1.

In case one of the transport blocks is disabled; the transport block to codeword mapping is specified according to Table 5.3.3.1.5-2. For the single enabled codeword, Value = 4, 5, 6 in Table 5.3.3.1.5C-1 are only supported for retransmission of the corresponding transport block if that transport block has previously been transmitted using two, three or four layers, respectively.

If the number of information bits in format 2C carried by PDCCH belongs to one of the sizes in Table 5.3.3.1.2-1, one zero bit shall be appended to format 2C.

Samsung Exhibit 1017, Page 108 of 121

Table 5.3.3.1.5C-1: Antenna port(s), scrambling identity and number of layers indication

One Codeword: Codeword 0 enabled, Codeword 1 disabled		Two Codewords: Codeword 0 enabled, Codeword 1 enabled	
Value	**Message**	**Value**	**Message**
0	1 layer, port 7, n_{SCID}=0	0	2 layers, ports 7-8, n_{SCID}=0
1	1 layer, port 7, n_{SCID}=1	1	2 layers, ports 7-8, n_{SCID}=1
2	1 layer, port 8, n_{SCID}=0	2	3 layers, ports 7-9
3	1 layer, port 8, n_{SCID}=1	3	4 layers, ports 7-10
4	2 layers, ports 7-8	4	5 layers, ports 7-11
5	3 layers, ports 7-9	5	6 layers, ports 7-12
6	4 layers, ports 7-10	6	7 layers, ports 7-13
7	Reserved	7	8 layers, ports 7-14

Table 5.3.3.1.5C-2: Antenna port(s), scrambling identity and number of layers indication

One Codeword: Codeword 0 enabled, Codeword 1 disabled		Two Codewords: Codeword 0 enabled, Codeword 1 enabled	
Value	**Message**	**Value**	**Message**
0	1 layer, port 7, n_{SCID}=0 (OCC=2)	0	2 layer, port 7-8, n_{SCID}=0 (OCC=2)
1	1 layer, port 7, n_{SCID}=1 (OCC=2)	1	2 layer, port 7-8, n_{SCID}=1 (OCC=2)
2	1 layer, port 8, n_{SCID}=0 (OCC=2)	2	2 layer, port 7-8, n_{SCID}=0 (OCC=4)
3	1 layer, port 8, n_{SCID}=1 (OCC=2)	3	2 layer, port 7-8, n_{SCID}=1 (OCC=4)
4	1 layer, port 7, n_{SCID}=0 (OCC=4)	4	2 layer, port 11,13, n_{SCID}=0 (OCC=4)
5	1 layer, port 7, n_{SCID}=1 (OCC=4)	5	2 layer, port 11,13, n_{SCID}=1 (OCC=4)
6	1 layer, port 8, n_{SCID}=0 (OCC=4)	6	3 layer, port 7-9
7	1 layer, port 8, n_{SCID}=1 (OCC=4)	7	4 layer, port 7-10
8	1 layer, port 11, n_{SCID}=0 (OCC=4)	8	5 layer, port 7-11
9	1 layer, port 11, n_{SCID}=1 (OCC=4)	9	6 layer, port 7-12
10	1 layer, port 13, n_{SCID}=0 (OCC=4)	10	7 layers, ports 7-13
11	1 layer, port 13, n_{SCID}=1 (OCC=4)	11	8 layers, ports 7-14
12	2 layers, ports 7-8	12	Reserved
13	3 layers, ports 7-9	13	Reserved
14	4 layers, ports 7-10	14	Reserved
15	Reserved	15	Reserved

5.3.3.1.5D Format 2D

The following information is transmitted by means of the DCI format 2D:

- Carrier indicator – 0 or 3 bits. The field is present according to the definitions in [3].

- Resource allocation header (resource allocation type 0 / type 1) – 1 bit as defined in section 7.1.6 of [3]

  If downlink bandwidth is less than or equal to 10 PRBs, there is no resource allocation header and resource allocation type 0 is assumed.

- Resource block assignment:

  - For resource allocation type 0 as defined in section 7.1.6.1 of [3]

Samsung Exhibit 1017, Page 109 of 121

- $\left\lceil N_{\mathrm{RB}}^{\mathrm{DL}} / P \right\rceil$ bits provide the resource allocation

- For resource allocation type 1 as defined in section 7.1.6.2 of [3]

  - $\left\lceil \log_2(P) \right\rceil$ bits of this field are used as a header specific to this resource allocation type to indicate the selected resource blocks subset

  - 1 bit indicates a shift of the resource allocation span

  - $\left(\left\lceil N_{\mathrm{RB}}^{\mathrm{DL}} / P \right\rceil - \left\lceil \log_2(P) \right\rceil - 1 \right)$ bits provide the resource allocation

where the value of P depends on the number of DL resource blocks as indicated in section [7.1.6.1] of [3]

- TPC command for PUCCH – 2 bits as defined in section 5.1.2.1 of [3]

- Downlink Assignment Index – number of bits as specified in Table 5.3.3.1.2-2.

- HARQ process number - 3 bits (for cases with FDD primary cell), 4 bits (for cases with TDD primary cell)

- Antenna port(s), scrambling identity and number of layers – 3 bits as specified in Table 5.3.3.1.5C-1 where n_{SCID} is the scrambling identity for antenna ports 7 and 8 defined in section 6.10.3.1 of [2], or 4bits as specified in Table 5.3.3.1.5C-2 where n_{SCID} is the scrambling identity for antenna ports 7, 8, 11 and 13 defined in section 6.10.3.1 of [2] when higher layer parameter *Rel-13-DMRS-table* is set to 1.

- SRS request – [0-1] bit. This field can only be present for TDD operation and if present is defined in section 8.2 of [3]

In addition, for transport block 1:

- Modulation and coding scheme – 5 bits as defined in section 7.1.7 of [3]

- New data indicator – 1 bit

- Redundancy version – 2 bits

In addition, for transport block 2:

- Modulation and coding scheme – 5 bits as defined in section 7.1.7 of [3]

- New data indicator – 1 bit

- Redundancy version – 2 bits

- PDSCH RE Mapping and Quasi-Co-Location Indicator – 2 bits as defined in sections 7.1.9 and 7.1.10 of [3]

- HARQ-ACK resource offset (this field is present when this format is carried by EPDCCH. This field is not present when this format is carried by PDCCH) – 2 bits as defined in section 10.1 of [3]. The 2 bits are set to 0 when this format is carried by EPDCCH on a secondary cell, or when this format is carried by EPDCCH on the primary cell scheduling PDSCH on a secondary cell and the UE is configured with PUCCH format 3 for HARQ-ACK feedback.

If both transport blocks are enabled; transport block 1 is mapped to codeword 0; and transport block 2 is mapped to codeword 1.

In case one of the transport blocks is disabled; the transport block to codeword mapping is specified according to Table 5.3.3.1.5-2. For the single enabled codeword, Value = 4, 5, 6 in Table 5.3.3.1.5C-1 are only supported for retransmission of the corresponding transport block if that transport block has previously been transmitted using two, three or four layers, respectively.

If the number of information bits in format 2D carried by PDCCH belongs to one of the sizes in Table 5.3.3.1.2-1, one zero bit shall be appended to format 2D.

5.3.3.1.6 Format 3

DCI format 3 is used for the transmission of TPC commands for PUCCH and PUSCH with 2-bit power adjustments.

Samsung Exhibit 1017, Page 110 of 121

The following information is transmitted by means of the DCI format 3:

- TPC command number 1, TPC command number 2,…, TPC command number N

where $N = \left\lfloor \frac{L_{\text{format 0}}}{2} \right\rfloor$, and where $L_{\text{format 0}}$ is equal to the payload size of format 0 before CRC attachment when format 0 is mapped onto the common search space, including any padding bits appended to format 0. The parameter *tpc-Index* or *tpc-Index-PUCCH-SCell-r13* provided by higher layers determines the index to the TPC command for a given UE.

If $\left\lfloor \frac{L_{\text{format 0}}}{2} \right\rfloor < \frac{L_{\text{format 0}}}{2}$, a bit of value zero shall be appended to format 3.

5.3.3.1.7 Format 3A

DCI format 3A is used for the transmission of TPC commands for PUCCH and PUSCH with single bit power adjustments.

The following information is transmitted by means of the DCI format 3A:

- TPC command number 1, TPC command number 2,…, TPC command number M

where $M = L_{\text{format 0}}$, and where $L_{\text{format 0}}$ is equal to the payload size of format 0 before CRC attachment when format 0 is mapped onto the common search space, including any padding bits appended to format 0. The parameter *tpc-Index* or *tpc-Index-PUCCH-SCell-r13* provided by higher layers determines the index to the TPC command for a given UE.

5.3.3.1.8 Format 4

DCI format 4 is used for the scheduling of PUSCH in one UL cell with multi-antenna port transmission mode,

The following information is transmitted by means of the DCI format 4:

- Carrier indicator – 0 or 3 bits. The field is present according to the definitions in [3].
- Resource block assignment - $\max\left(\left\lceil \log_2(N_{\text{RB}}^{\text{UL}}(N_{\text{RB}}^{\text{UL}}+1)/2) \right\rceil, \left\lceil \log_2\left(\left(\frac{\left\lceil N_{RB}^{UL}/P+1 \right\rceil}{4} \right) \right) \right\rceil \right)$ bits, where P is the UL RBG size as defined in section 8.1.2 of [3]
- For resource allocation type 0:
  - The $\left(\left\lceil \log_2(N_{\text{RB}}^{\text{UL}}(N_{\text{RB}}^{\text{UL}}+1)/2) \right\rceil \right)$ LSBs provide the resource allocation in the UL subframe as defined in section 8.1.1 of [3]
- For resource allocation type 1:
  - The $\left\lceil \log_2\left(\left(\frac{\left\lceil N_{RB}^{UL}/P+1 \right\rceil}{4} \right) \right) \right\rceil$ LSBs provide the resource allocation in the UL subframe as defined in section 8.1.2 of [3]
- TPC command for scheduled PUSCH – 2 bits as defined in section 5.1.1.1 of [3]
- Cyclic shift for DM RS and OCC index – 3 bits as defined in section 5.5.2.1.1 of [2]
- UL index – 2 bits as defined in sections 5.1.1.1, 7.2.1, 8 and 8.4 of [3] (this field is present only for TDD operation with uplink-downlink configuration 0)

Samsung Exhibit 1017, Page 111 of 121

- Downlink Assignment Index (DAI) – 2 bits as defined in section 7.3 of [3] (this field is present only for cases with TDD primary cell and either TDD operation with uplink-downlink configurations 1-6 or FDD operation)
- CSI request – 1, 2 or 3 bits as defined in section 7.2.1 of [3]. The 2-bit field applies to UEs configured with no more than five DL cells and to
  - UEs that are configured with more than one DL cell;
  - UEs that are configured by higher layers with more than one CSI process;
  - UEs that are configured with two CSI measurement sets by higher layers with the parameter *csi-MeasSubframeSet*;

  the 3-bit field applies to UEs that are configured with more than five DL cells;

  otherwise the 1-bit field applies
- SRS request – 2 bits as defined in section 8.2 of [3]
- Resource allocation type – 1 bit as defined in section 8.1 of [3]

In addition, for transport block 1:

- Modulation and coding scheme and redundancy version – 5 bits as defined in section 8.6 of [3]
- New data indicator – 1 bit

In addition, for transport block 2:

- Modulation and coding scheme and redundancy version – 5 bits as defined in section 8.6 of [3]
- New data indicator – 1 bit

Precoding information and number of layers: number of bits as specified in Table 5.3.3.1.8-1. Bit field as shown in Table 5.3.3.1.8-2 and Table 5.3.3.1.8- 3. Note that TPMI for 2 antenna ports indicates which codebook index is to be used in Table 5.3.3A.2-1 of [2], and TPMI for 4 antenna ports indicates which codebook index is to be used in Table 5.3.3A.2-2, Table 5.3.3A.2-3, Table 5.3.3A.2-4 and Table 5.3.3A.2-5 of [2]. If both transport blocks are enabled, transport block 1 is mapped to codeword 0; and transport block 2 is mapped to codeword 1. In case one of the transport blocks is disabled, the transport block to codeword mapping is specified according to Table 5.3.3.1.5-2. For a single enabled codeword, indices 24 to 39 in Table 5.3.3.1.8-3 are only supported for retransmission of the corresponding transport block if that transport block has previously been transmitted using two layers.

Table 5.3.3.1.8-1: Number of bits for precoding information.

Number of antenna ports at UE	Number of bits for precoding information
2	3
4	6

Table 5.3.3.1.8-2: Content of precoding information field for 2 antenna ports

One codeword: Codeword 0 enabled Codeword 1 disabled		Two codewords: Codeword 0 enabled Codeword 1 enabled	
Bit field mapped to index	**Message**	**Bit field mapped to index**	**Message**
0	1 layer: TPMI=0	0	2 layers: TPMI=0
1	1 layer: TPMI=1	1-7	reserved
2	1 layer: TPMI=2		
…	…		
5	1 layer: TPMI=5		
6-7	reserved		

Samsung Exhibit 1017, Page 112 of 121

Table 5.3.3.1.8-3: Content of precoding information field for 4 antenna ports

One codeword: Codeword 0 enabled Codeword 1 disabled		Two codewords: Codeword 0 enabled Codeword 1 enabled	
Bit field mapped to index	**Message**	**Bit field mapped to index**	**Message**
0	1 layer: TPMI=0	0	2 layers: TPMI=0
1	1 layer: TPMI=1	1	2 layers: TPMI=1
…	…	…	…
23	1 layer: TPMI=23	15	2 layers: TPMI=15
24	2 layers: TPMI=0	16	3 layers: TPMI=0
25	2 layers: TPMI=1	17	3 layers: TPMI=1
…	…	…	…
39	2 layers: TPMI=15	27	3 layers: TPMI=11
40-63	reserved	28	4 layers: TPMI=0
		29 - 63	Reserved

If the number of information bits in format 4 is equal to the payload size for DCI format 1, 2, 2A, 2B, 2C or 2D associated with the configured DL transmission mode in the same serving cell, one zero bit shall be appended to format 4.

5.3.3.1.9 Format 5

DCI format 5 is used for the scheduling of PSCCH, and also contains several SCI format 0 fields used for the scheduling of PSSCH.

The following information is transmitted by means of the DCI format 5:

- Resource for PSCCH – 6 bits as defined in section 14.2.1 of [3]

-TPC command for PSCCH and PSSCH – 1 bit as defined in sections 14.2.1 and 14.1.1 of [3]

- SCI format 0 fields according to 5.4.3.1.1:

  - Frequency hopping flag

  - Resource block assignment and hopping resource allocation

  - Time resource pattern

If the number of information bits in format 5 mapped onto a given search space is less than the payload size of format 0 for scheduling the same serving cell, zeros shall be appended to format 5 until the payload size equals that of format 0 including any padding bits appended to format 0.

5.3.3.2 CRC attachment

Error detection is provided on DCI transmissions through a Cyclic Redundancy Check (CRC).

The entire payload is used to calculate the CRC parity bits. Denote the bits of the payload by $a_0, a_1, a_2, a_3, ..., a_{A-1}$, and the parity bits by $p_0, p_1, p_2, p_3, ..., p_{L-1}$. A is the payload size and L is the number of parity bits.

The parity bits are computed and attached according to section 5.1.1 setting L to 16 bits, resulting in the sequence $b_0, b_1, b_2, b_3, ..., b_{B-1}$, where $B = A + L$.

In the case where closed-loop UE transmit antenna selection is not configured or applicable, after attachment, the CRC parity bits are scrambled with the corresponding RNTI $x_{rnti,0}, x_{rnti,1}, ..., x_{rnti,15}$, where $x_{rnti,0}$ corresponds to the MSB of the RNTI, to form the sequence of bits $c_0, c_1, c_2, c_3, ..., c_{B-1}$. The relation between c_k and b_k is:

$c_k = b_k$ for $k = 0, 1, 2, \ldots, A-1$

Samsung Exhibit 1017, Page 113 of 121

$$c_k = (b_k + x_{rnti,k-A}) \bmod 2 \quad \text{for } k = A, A+1, A+2, ..., A+15.$$

In the case where closed-loop UE transmit antenna selection is configured and applicable, after attachment, the CRC parity bits with DCI format 0 are scrambled with the antenna selection mask $x_{AS,0}, x_{AS,1}, ..., x_{AS,15}$ as indicated in Table 5.3.3.2-1 and the corresponding RNTI $x_{rnti,0}, x_{rnti,1}, ..., x_{rnti,15}$ to form the sequence of bits $c_0, c_1, c_2, c_3, ..., c_{B-1}$. The relation between c_k and b_k is:

$$c_k = b_k \qquad \text{for } k = 0, 1, 2, \ldots, A\text{-}1$$

$$c_k = (b_k + x_{rnti,k-A} + x_{AS,k-A}) \bmod 2 \quad \text{for } k = A, A+1, A+2, ..., A+15.$$

Table 5.3.3.2-1: UE transmit antenna selection mask.

UE transmit antenna selection	Antenna selection mask $< x_{AS,0}, x_{AS,1}, ..., x_{AS,15} >$
UE port 0	<0, 0, 0, 0, 0, 0, 0, 0, 0, 0, 0, 0, 0, 0, 0, 0>
UE port 1	<0, 0, 0, 0, 0, 0, 0, 0, 0, 0, 0, 0, 0, 0, 0, 1>

5.3.3.3 Channel coding

Information bits are delivered to the channel coding block. They are denoted by $c_0, c_1, c_2, c_3, ..., c_{K-1}$, where K is the number of bits, and they are tail biting convolutionally encoded according to section 5.1.3.1.

After encoding the bits are denoted by $d_0^{(i)}, d_1^{(i)}, d_2^{(i)}, d_3^{(i)}, ..., d_{D-1}^{(i)}$, with $i = 0,1,\text{and } 2$, and where D is the number of bits on the i-th coded stream, i.e., $D = K$.

5.3.3.4 Rate matching

A tail biting convolutionally coded block is delivered to the rate matching block. This block of coded bits is denoted by $d_0^{(i)}, d_1^{(i)}, d_2^{(i)}, d_3^{(i)}, ..., d_{D-1}^{(i)}$, with $i = 0,1,\text{and } 2$, and where i is the coded stream index and D is the number of bits in each coded stream. This coded block is rate matched according to section 5.1.4.2.

After rate matching, the bits are denoted by $e_0, e_1, e_2, e_3, ..., e_{E-1}$, where E is the number of rate matched bits.

5.3.4 Control format indicator

Data arrives each subframe to the coding unit in the form of an indicator for the time span, in units of OFDM symbols, of the DCI carried by PDCCH in that subframe of the corresponding DL cell. The CFI takes values CFI = 1, 2 or 3. For system bandwidths $N_{\text{RB}}^{\text{DL}} > 10$, the span of the DCI carried by PDCCH in units of OFDM symbols, 1, 2 or 3, is given by the CFI. For system bandwidths $N_{\text{RB}}^{\text{DL}} \le 10$, the span of the DCI carried by PDCCH in units of OFDM symbols, 2, 3 or 4, is given by CFI+1.

The coding flow is shown in Figure 5.3.4-1.

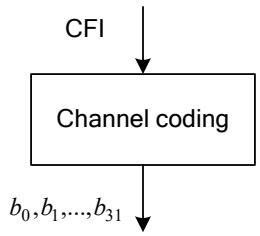

Figure 5.3.4-1 Coding for CFI.

Samsung Exhibit 1017, Page 114 of 121

5.3.4.1 Channel coding

The control format indicator is coded according to Table 5.3.4-1.

Table 5.3.4-1: CFI code words.

CFI	CFI code word < b_0, b_1, …, b_{31} >
1	<0,1,1,0,1,1,0,1,1,0,1,1,0,1,1,0,1,1,0,1,1,0,1,1,0,1,1,0,1,1,0,1>
2	<1,0,1,1,0,1,1,0,1,1,0,1,1,0,1,1,0,1,1,0,1,1,0,1,1,0,1,1,0,1,1,0>
3	<1,1,0,1,1,0,1,1,0,1,1,0,1,1,0,1,1,0,1,1,0,1,1,0,1,1,0,1,1,0,1,1>
4 (Reserved)	<0,0,0,0,0,0,0,0,0,0,0,0,0,0,0,0,0,0,0,0,0,0,0,0,0,0,0,0,0,0,0,0>

5.3.5 HARQ indicator (HI)

Data arrives to the coding unit in the form of indicators for HARQ acknowledgement for one transport block.

The coding flow is shown in Figure 5.3.5-1.

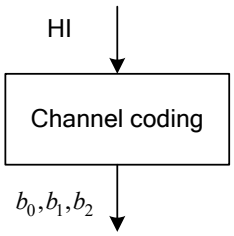

Figure 5.3.5-1 Coding for HI.

5.3.5.1 Channel coding

The HI is coded according to Table 5.3.5-1, where for a positive acknowledgement HI = 1 and for a negative acknowledgement HI = 0.

Table 5.3.5-1: HI code words.

HI	HI code word < b_0, b_1, b_2 >
0	< 0,0,0 >
1	< 1,1,1 >

5.4 Sidelink transport channels and control information

5.4.1 Sidelink broadcast channel

Figure 5.4.1-1 shows the processing structure for the SL-BCH transport channel. Data arrives to the coding unit in the form of a maximum of one transport block. The following coding steps can be identified:

Samsung Exhibit 1017, Page 115 of 121

- Add CRC to the transport block
- Channel coding
- Rate matching

The coding steps for SL-BCH transport channel are shown in the figure below. In addition, after rate matching PUSCH interleaving is applied according to sections 5.2.2.7 and 5.2.2.8 without any control information in order to apply a time-first rather than frequency-first mapping, where $C_{mux} = 2 \cdot \left(N_{\text{symb}}^{\text{SL}} - 3\right)$ and the sequence of bits *f* is equal to *e*.

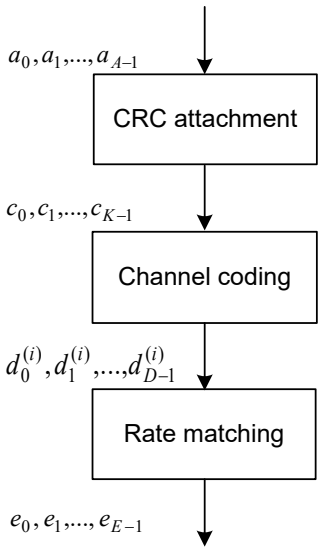

Figure 5.4.1-1: Transport channel processing for SL-BCH.

5.4.1.1 Transport block CRC attachment

Error detection is provided on transport blocks through a Cyclic Redundancy Check (CRC).

The entire transport block is used to calculate the CRC parity bits. Denote the bits in a transport block delivered to layer 1 by $a_0, a_1, a_2, a_3, ..., a_{A-1}$, and the parity bits by $p_0, p_1, p_2, p_3, ..., p_{L-1}$. *A* is the size of the transport block and *L* is the number of parity bits. The lowest order information bit a_0 is mapped to the most significant bit of the transport block as defined in section 6.1.1 of [5].

The parity bits are computed and attached according to section 5.1.1 setting *L* to 16 bits, resulting in the sequence of bits $c_0, c_1, c_2, c_3, ..., c_{K-1}$ where $c_k = b_k$ for $k = 0, 1, 2, \ldots, K\text{-}1$ and $K=A+L$.

5.4.1.2 Channel coding

Information bits are delivered to the channel coding block. They are denoted by $c_0, c_1, c_2, c_3, ..., c_{K-1}$, where *K* is the number of bits, and they are tail biting convolutionally encoded according to section 5.1.3.1.

After encoding the bits are denoted by $d_0^{(i)}, d_1^{(i)}, d_2^{(i)}, d_3^{(i)}, ..., d_{D-1}^{(i)}$, with $i = 0,1,\text{and } 2$, and where *D* is the number of bits on the *i*-th coded stream, i.e., $D = K$.

5.4.1.3 Rate matching

A tail biting convolutionally coded block is delivered to the rate matching block. This block of coded bits is denoted by $d_0^{(i)}, d_1^{(i)}, d_2^{(i)}, d_3^{(i)}, ..., d_{D-1}^{(i)}$, with $i = 0,1,\text{and } 2$, and where *i* is the coded stream index and *D* is the number of bits in each coded stream. This coded block is rate matched according to section 5.1.4.2.

Samsung Exhibit 1017, Page 116 of 121

After rate matching, the bits are denoted by $e_0, e_1, e_2, e_3, ..., e_{E-1}$, where E is the number of rate matched bits as defined in section 9.6.1 of [2].

5.4.2 Sidelink shared channel

The processing of the sidelink shared channel follows the downlink shared channel according to section 5.3.2, with the following differences:

- Data arrives to the coding unit in the form of a maximum of one transport block every transmission time interval (TTI)
- In the step of code block concatenation, the sequence of coded bits corresponding to one transport block after code block concatenation is referred to as one codeword in section 9.3.1 of [2].
- PUSCH interleaving is applied according to sections 5.2.2.7 and 5.2.2.8 without any control information in order to apply a time-first rather than frequency-first mapping, where $C_{mux} = 2 \cdot \left(N_{\text{symb}}^{\text{SL}} - 1\right)$.

5.4.3 Sidelink control information

An SCI transports sidelink scheduling information for one destination ID.

The processing for one SCI follows the downlink control information according to section 5.3.3, with the following differences:

- In the step of CRC attachment, no scrambling is performed.
- PUSCH interleaving is applied according to sections 5.2.2.7 and 5.2.2.8 without any control information in order to apply a time-first rather than frequency-first mapping, where $C_{mux} = 2 \cdot \left(N_{\text{symb}}^{\text{SL}} - 1\right)$ and the sequence of bits f is equal to e.

5.4.3.1 SCI formats

The fields defined in the SCI formats below are mapped to the information bits a_0 to a_{A-1} as follows.

Each field is mapped in the order in which it appears in the description, with the first field mapped to the lowest order information bit a_0 and each successive field mapped to higher order information bits. The most significant bit of each field is mapped to the lowest order information bit for that field, e.g. the most significant bit of the first field is mapped to a_0.

5.4.3.1.1 SCI format 0

SCI format 0 is used for the scheduling of PSSCH.

The following information is transmitted by means of the SCI format 0:

- Frequency hopping flag – 1 bit as defined in section 14.1.1 of [3].
- Resource block assignment and hopping resource allocation – $\left\lceil \log_2(N_{\text{RB}}^{\text{SL}}(N_{\text{RB}}^{\text{SL}}+1)/2) \right\rceil$ bits
  - For PSSCH hopping:
    - N_{SL_hop} MSB bits are used to obtain the value of $\tilde{n}_{PRB}(i)$ as indicated in section 8.4 of [3]
    - $\left(\left\lceil \log_2(N_{\text{RB}}^{\text{SL}}(N_{\text{RB}}^{\text{SL}}+1)/2) \right\rceil - N_{\text{SL_hop}}\right)$ bits provide the resource allocation in the subframe
  - For non-hopping PSSCH:

Samsung Exhibit 1017, Page 117 of 121

- $\left(\left\lceil \log_2(N_{\mathrm{RB}}^{\mathrm{SL}}(N_{\mathrm{RB}}^{\mathrm{SL}}+1)/2) \right\rceil\right)$ bits provide the resource allocation in the subframe as defined in section 8.1.1 of [3]

- Time resource pattern – 7 bits as defined in section 14.1.1 of [3].

- Modulation and coding scheme – 5 bits as defined in section 14.1.1 of [3]

- Timing advance indication – 11 bits as defined in section 14.2.1 of [3]

- Group destination ID – 8 bits as defined by higher layers

5.4.4 Sidelink discovery channel

The processing of the sidelink discovery channel follows the downlink shared channel according to section 5.3.2, with the following differences:

- Data arrives to the coding unit in the form of a maximum of one transport block every transmission time interval (TTI)

- In the step of code block concatenation, the sequence of coded bits corresponding to one transport block after code block concatenation is referred to as one codeword in section 9.5.1 of [2].

- PUSCH interleaving is applied according to sections 5.2.2.7 and 5.2.2.8 without any control information in order to apply a time-first rather than frequency-first mapping, where $C_{mux} = 2 \cdot \left(N_{\mathrm{symb}}^{\mathrm{SL}} - 1\right)$.

Samsung Exhibit 1017, Page 118 of 121

Annex A (informative): Change history

Change history							
Date	**TSG #**	**TSG Doc.**	**CR**	**Rev**	**Subject/Comment**	**Old**	**New**
2006-09					Skeleton		0.0.0
2006-10					Updated skeleton	0.0.0	0.0.1
2006-10					Endorsed skeleton	0.0.1	0.1.0
2006-11					Added TC. Added Broadcast, Paging and MBMS transport channels in Table 4.2-1.	0.1.0	0.1.1
2006-11					Endorsed v 0.2.0	0.1.1	0.2.0
2006-12					Added CC. Added type of coding for each transport channel or control information.	0.2.0	0.2.1
2007-01					Editor's version	0.2.1	0.2.2
2007-01					Endorsed v 0.3.0	0.2.2	0.3.0
2007-02					Added QPP turbo Interleaver description.	0.3.0	0.3.1
2007-02					Editor's version	0.3.1	0.3.2
2007-02					Endorsed v 0.4.0	0.3.2	0.4.0
2007-02					Added CRC details for PDSCH, PDCCH and PUSCH. Added QPP turbo-interleaver parameters. Set Z to 6144. Added details on code block segmentation.	0.4.0	0.4.1
2007-02					Editor's version	0.4.1	0.4.2
2007-03	RAN#35	RP-070170			For information at RAN#35	0.4.2	1.0.0
2007-03					Editor's version	1.0.0	1.0.1
2007-03					Editor's version	1.0.1	1.1.0
2007-05					Editor's version	1.1.0	1.1.1
2007-05					Editor's version	1.1.1	1.1.2
2007-05					Editor's version	1.1.2	1.2.0
2007-06					Added circular buffer rate matching for PDSCH and PUSCH. Miscellaneous changes.	1.2.0	1.2.1
2007-06					Editor's version	1.2.1	1.2.2
2007-07					Editor's version	1.2.2	1.2.3
2007-07					Endorsed by email following decision taken at RAN1#49b	1.2.3	1.3.0
2007-08					Editor's version including decision from RAN1#49bis.	1.3.0	1.3.1
2007-08					Editor's version	1.3.1	1.3.2
2007-08					Editor's version	1.3.2	1.4.0
2007-09					Editor's version with decisions from RAN1#50	1,4.0	1,4,1
2007-09					Editor's version	1.4.1	1.4.2
10/09/07	RAN#37	RP-070730	-	-	For approval at RAN#37	1.4.2	2.0.0
12/09/07	RAN_37	RP-070730	-	-	Approved version	2.0.0	8.0.0
28/11/07	RAN_38	RP-070949	0001	-	Update of 36.212	8.0.0	8.1.0
05/03/08	RAN_39	RP-080145	0002	-	Update to 36.212 incorporating decisions from RAN1#51bis and RAN1#52	8.1.0	8.2.0
28/05/08	RAN_40	RP-080433	0003	-	Joint coding of CQI and ACK on PUCCH	8.2.0	8.3.0
28/05/08	RAN_40	RP-080433	0004	1	ACK insertion into PUSCH	8.2.0	8.3.0
28/05/08	RAN_40	RP-080433	0005	1	Introduction of format 1C	8.2.0	8.3.0
28/05/08	RAN_40	RP-080433	0006	1	Miscellaneous fixes to 36.212	8.2.0	8.3.0
28/05/08	RAN_40	RP-080433	0008	1	On multiplexing scheme for indicators	8.2.0	8.3.0
28/05/08	RAN_40	RP-080433	0009	1	On the soft buffer split of MIMO and TDD	8.2.0	8.3.0
28/05/08	RAN_40	RP-080433	0010	-	Resource assignment field for distributed VRB	8.2.0	8.3.0
28/05/08	RAN_40	RP-080433	0011	-	Clarifying the use of the different DCI formats	8.2.0	8.3.0
28/05/08	RAN_40	RP-080433	0012	1	Clarifying the value of N_L	8.2.0	8.3.0
28/05/08	RAN_40	RP-080433	0013	-	Payload size for DCI formats 3 and 3A	8.2.0	8.3.0
28/05/08	RAN_40	RP-080433	0014	-	Coding of ACK on PUSCH	8.2.0	8.3.0
28/05/08	RAN_40	RP-080433	0015	1	Coding of RI on PUSCH and mapping	8.2.0	8.3.0
28/05/08	RAN_40	RP-080433	0016	-	CRC for control information on PUSCH	8.2.0	8.3.0
28/05/08	RAN_40	RP-080433	0017	-	Introduction of Downlink Assignment Index	8.2.0	8.3.0
28/05/08	RAN_40	RP-080433	0018	-	Coding of CQI/PMI on PUSCH coming from PUCCH	8.2.0	8.3.0
28/05/08	RAN_40	RP-080433	0019	-	Simultaneous transmission of aperiodic CQI and UL control	8.2.0	8.3.0
28/05/08	RAN_40	RP-080433	0020	-	Encoding of antenna indicator on DCI format 0	8.2.0	8.3.0
28/05/08	RAN_40	RP-080433	0021	-	PDCCH coverage in narrow bandwidths	8.2.0	8.3.0
28/05/08	RAN_40	RP-080433	0022	-	Closed-loop and open-loop spatial multiplexing	8.2.0	8.3.0
28/05/08	RAN_40	RP-080457	0023	-	Formula for linkage between PUSCH MCS and amount of resources used for control	8.2.0	8.3.0
09/09/08	RAN_41	RP-080669	0026	-	Correction to PUSCH Channel Interleaver	8.3.0	8.4.0
09/09/08	RAN_41	RP-080669	0028	-	Correction of mapping of ACK/NAK to binary bit values	8.3.0	8.4.0
09/09/08	RAN_41	RP-080669	0029	-	Correction to bit collection, selection and transmission	8.3.0	8.4.0

Samsung Exhibit 1017, Page 119 of 121

Change history							
Date	**TSG #**	**TSG Doc.**	**CR**	**Rev**	**Subject/Comment**	**Old**	**New**
09/09/08	RAN_41	RP-080669	0030	-	Padding one bit to DCI format 1 when format 1 and format 0/1A have the same size	8.3.0	8.4.0
09/09/08	RAN_41	RP-080669	0031	-	Modification of M_limit	8.3.0	8.4.0
09/09/08	RAN_41	RP-080669	0032	-	Definition of Formats 2 and 2A	8.3.0	8.4.0
09/09/08	RAN_41	RP-080669	0033	2	Corrections to DCI formats	8.3.0	8.4.0
09/09/08	RAN_41	RP-080669	0035	1	Format 1B confirmation flag	8.3.0	8.4.0
09/09/08	RAN_41	RP-080669	0036	-	Corrections to Rank information scrambling in Uplink Shared Channel	8.3.0	8.4.0
09/09/08	RAN_41	RP-080669	0037	2	Clarification of TPC commands signaled in DCI formats 3/3A	8.3.0	8.4.0
09/09/08	RAN_41	RP-080669	0038	-	Clarification on UE transmit antenna selection mask	8.3.0	8.4.0
09/09/08	RAN_41	RP-080669	0039	1	Linking of control resources in PUSCH to data MCS	8.3.0	8.4.0
09/09/08	RAN_41	RP-080669	0041	-	Definition of Bit Mapping for DCI signalling	8.3.0	8.4.0
09/09/08	RAN_41	RP-080669	0042	1	Clarification on resource allocation in DCI format 1/2/2A	8.3.0	8.4.0
09/09/08	RAN_41	RP-080669	0043	-	DCI Format 1A changes needed for scheduling Broadcast Control	8.3.0	8.4.0
09/09/08	RAN_41	RP-080669	0044	-	DCI format1C	8.3.0	8.4.0
09/09/08	RAN_41	RP-080669	0045	-	Miscellaneous corrections	8.3.0	8.4.0
11/09/08	RAN_41	RP-080736	0046	1	Correction on downlink multi-user MIMO	8.3.0	8.4.0
09/09/08	RAN_41	RP-080669	0047	-	Corrections to DL DCI Formats In case of Ambiguous Payload Sizes	8.3.0	8.4.0
09/09/08	RAN_41	RP-080669	0048	-	CR for RE provisioning for the control information in case of CQI-only transmission on PUSCH	8.3.0	8.4.0
09/09/08	RAN_41	RP-080669	0091	2	Coding and multiplexing of multiple ACK/NACK in PUSCH	8.3.0	8.4.0
03/12/08	RAN_42	RP-080983	0050	2	Clarification of input bits corresponding to 2-bit HARQ-ACK and 2-bit RI	8.4.0	8.5.0
03/12/08	RAN_42	RP-080983	0053	-	Editorial corrections to 36.212	8.4.0	8.5.0
03/12/08	RAN_42	RP-080983	0055	-	Miscellaneous Corrections	8.4.0	8.5.0
03/12/08	RAN_42	RP-080983	0057	-	Clarification of mapping of information bits	8.4.0	8.5.0
03/12/08	RAN_42	RP-080983	0058	-	Completion of 36.212 CR47 (R1-083421) for “new” DCI Formats	8.4.0	8.5.0
03/12/08	RAN_42	RP-080983	0059	-	Change for determining DCI format 1A TBS table column indicator for broadcast control	8.4.0	8.5.0
03/12/08	RAN_42	RP-080983	0061	2	Defining DCI format 1A for downlink data arrival	8.4.0	8.5.0
03/12/08	RAN_42	RP-080983	0063	1	ACK/NACK transmission on PUSCH for LTE TDD	8.4.0	8.5.0
03/12/08	RAN_42	RP-080983	0065	-	Correction in 36.212 related to TDD downlink HARQ processes	8.4.0	8.5.0
03/12/08	RAN_42	RP-080983	0067	1	Correction of control MCS offset and SRS symbol puncturing	8.4.0	8.5.0
03/12/08	RAN_42	RP-080983	0068	1	DCI format 2/2A	8.4.0	8.5.0
03/12/08	RAN_42	RP-080983	0069	-	Correction to zero padding in DCI format 1	8.4.0	8.5.0
03/12/08	RAN_42	RP-080983	0071	-	Clarification of RI bit field mapping for PUCCH	8.4.0	8.5.0
03/12/08	RAN_42	RP-080983	0072	-	Clarifying RNTI bit mapping for PDCCH CRC scrambling	8.4.0	8.5.0
03/12/08	RAN_42	RP-080983	0073	-	Clarification on BCH transport block size	8.4.0	8.5.0
03/12/08	RAN_42	RP-080983	0076	-	Clarification on the number of PUCCH-based CQI/PMI bits when reported on PUSCH	8.4.0	8.5.0
04/03/09	RAN_43	RP-090235	77	1	Corrections to Transmitted Rank Indication	8.5.0	8.6.0
04/03/09	RAN_43	RP-090235	79	1	Correction to the bundled ACK/NACK and DAI transmission	8.5.0	8.6.0
04/03/09	RAN_43	RP-090235	80	2	Corrections to transmission modes	8.5.0	8.6.0
04/03/09	RAN_43	RP-090235	81	1	Correction on ACKNACK transmission on PUSCH for LTE TDD	8.5.0	8.6.0
04/03/09	RAN_43	RP-090235	82	2	Corrections to CQI and RI fields description	8.5.0	8.6.0
04/03/09	RAN_43	RP-090235	83	-	Clarifying DCI format 1A and DCI Format 1B	8.5.0	8.6.0
04/03/09	RAN_43	RP-090235	92	1	Clarification on channel coding for UCI HARQ-ACK	8.5.0	8.6.0
27/05/09	RAN_44	RP-090528	87	-	Clarify some parameters for determining control resources on PUSCH	8.6.0	8.7.0
01/12/09	RAN_46	RP-091168	89	-	Clarification on bitwidth of RI	8.7.0	8.8.0
01/12/09	RAN_46	RP-091168	94	-	Correction to Channel interleaver for PUSCH RE Mapping	8.7.0	8.8.0
01/12/09	RAN_46	RP-091177	88	1	Editorial corrections to 36.212	8.8.0	9.0.0
01/12/09	RAN_46	RP-091257	95	1	Introduction of enhanced dual layer transmission	8.8.0	9.0.0
16/03/10	RAN_47	RP-100210	96	1	MCCH change notification using DCI format 1C	9.0.0	9.1.0
16/03/10	RAN_47	RP-100211	97	-	Addition of missing reference to DCI format 2B + typo corrections	9.0.0	9.1.0
01/06/10	RAN_48	RP-100589	98	-	Correction to TBS determination for DCI format 1C	9.1.0	9.2.0
14/09/10	RAN_49	RP-100899	99	-	Clarify soft buffer size determination for MCH	9.2.0	9.3.0
07/12/10	RAN_50	RP-101320	100	-	Introduction of Rel-10 LTE-Advanced features in 36.212	9.3.0	10.0.0
15/03/11	RAN_51	RP-110254	101	-	Correction on UE behavior upon receiving DCI format 1B	10.0.0	10.1.0
15/03/11	RAN_51	RP-110256	102	-	Corrections to Rel-10 LTE-Advanced features in 36.212	10.0.0	10.1.0
01/06/11	RAN_52	RP-110819	103	3	Correction of DCI format 0 and 4 resource allocation	10.1.0	10.2.0
01/06/11	RAN_52	RP-110819	104	2	Correction to Multi-cluster flag in DCI format 0	10.1.0	10.2.0
01/06/11	RAN_52	RP-110819	107	2	Corrections on HARQ-ACK Channel Coding in the PUSCH	10.1.0	10.2.0
01/06/11	RAN_52	RP-110820	108	3	A clarification for DCI format payload size	10.1.0	10.2.0
01/06/11	RAN_52	RP-110819	110	1	Correction the search space and RNTI for CQI and SRS request flag	10.1.0	10.2.0
01/06/11	RAN_52	RP-110819	111	-	Resource dimensioning for CQI only PUSCH transmission	10.1.0	10.2.0

Samsung Exhibit 1017, Page 120 of 121

Change history							
Date	**TSG #**	**TSG Doc.**	**CR**	**Rev**	**Subject/Comment**	**Old**	**New**
01/06/11	RAN_52	RP-110820	112	1	Correction on bit representations of transport block processing for UL-SCH	10.1.0	10.2.0
01/06/11	RAN_52	RP-110818	113	-	Clarification on PMI indication in DCI format1B and format 2	10.1.0	10.2.0
01/06/11	RAN_52	RP-110820	114	1	Rate maching parameters for CA	10.1.0	10.2.0
01/06/11	RAN_52	RP-110819	116	-	HARQ-ACK on PUSCH for TDD with channel selection configured for 2 serving cells	10.1.0	10.2.0
01/06/11	RAN_52	RP-110823	117	-	Single codeword multiple layer transmission in uplink	10.1.0	10.2.0
15/09/11	RAN_53	RP-111228	119	1	Corrections on transport block processing for UL-SCH	10.2.0	10.3.0
15/09/11	RAN_53	RP-111230	120	2	On correction of channel coding of control information	10.2.0	10.3.0
15/09/11	RAN_53	RP-111230	122	1	Size adjustment of DCI format 0, 1A and 1	10.2.0	10.3.0
15/09/11	RAN_53	RP-111232	123	1	Corrections on *Nsrs*	10.2.0	10.3.0
15/09/11	RAN_53	RP-111232	124	2	Corrections on DCI format 1B/1D	10.2.0	10.3.0
15/09/11	RAN_53	RP-111228	125	-	Minor Correction on DCI Format 1 Description	10.2.0	10.3.0
15/09/11	RAN_53	RP-111226	127	-	Correction on ACK/NACK mapping	10.2.0	10.3.0
15/09/11	RAN_53	RP-111231	128	-	Corrections on channel coding of control information and DCI Format 4.	10.2.0	10.3.0
15/09/11	RAN_53	RP-111229	129	-	Clarification and correction to configuration signalling condition for channel quality information formats	10.2.0	10.3.0
05/12/11	RAN_54	RP-111667	130	1	Corrections on codebook index indication in DCI format 4	10.3.0	10.4.0
05/12/11	RAN_54	RP-111666	131	-	HARQ-ACK on UCI-only PUSCH without UL-SCH data	10.3.0	10.4.0
28/02/12	RAN_55	RP-120283	132	2	Corrections on payload size adjustment for DCI format 1A and 1	10.4.0	10.5.0
28/02/12	RAN_55	RP-120283	133	1	Correction of two HARQ-ACK feedback on PUSCH	10.4.0	10.5.0
28/02/12	RAN_55	RP-120285	134	1	Miscellaneous corrections	10.4.0	10.5.0
13/06/12	RAN_56	RP-120739	136	-	Correction to Data and control multiplexing	10.5.0	10.6.0
13/06/12	RAN_56	RP-120737	138	-	Correction to CSI request field size in DCI format 0 and DCI format 4	10.5.0	10.6.0
04/09/12	RAN_57	RP-121272	139	-	Introduction of Rel-11 LTE-Advanced features in 36.212	10.6.0	11.0.0
04/12/12	RAN_58	RP-121839	143	-	Correction to the parameter ue-Category-v10xy	11.0.0	11.1.0
04/12/12	RAN_58	RP-121846	144	-	Finalisation for introducing Rel-11 features	11.0.0	11.1.0
26/02/13	RAN_59	RP-130255	145	-	Additional clarifications/corrections for introducing Rel-11 features	11.1.0	11.2.0
11/06/13	RAN_60	RP-130751	147	2	Correction on the RI bit width	11.2.0	11.3.0
11/06/13	RAN_60	RP-130747	148	-	CR on DCI Format 4 payload size	11.2.0	11.3.0
11/06/13	RAN_60	RP-130752	149	-	Correction on the time span of the DCI	11.2.0	11.3.0
11/06/13	RAN_60	RP-130752	150	-	Correction on ARO bit setting for DL DCIs carried by EPDCCH	11.2.0	11.3.0
11/06/13	RAN_60	RP-130750	151	-	Clarification on DL DAI usage in inter-band TDD CA	11.2.0	11.3.0
11/06/13	RAN_60	RP-130749	153	-	Correction to bit padding of DCI format 1A for secondary cell without uplink component carrier	11.2.0	11.3.0
03/12/13	RAN_62	RP-131893	155	1	Correction on parameter ue-Category	11.3.0	11.4.0
03/12/13	RAN_62	RP-131896	154	3	Introduction of Rel 12 feature for Downlink MIMO Enhancement	11.4.0	12.0.0
10/06/14	RAN_64	RP-140858	156	-	Clarification on UE antenna port based CRC masking	12.0.0	12.1.0
10/06/14	RAN_64	RP-140859	157	1	Correction on UCI multiplexing on PUSCH	12.0.0	12.1.0
10/06/14	RAN_64	RP-140862	158	-	Introduction of Rel 12 features of TDD-FDD CA and eIMTA	12.0.0	12.1.0
10/06/14	RAN_64	RP-140858	159	-	Clarification of downlink subframes	12.0.0	12.1.0
10/09/14	RAN_65	RP-141485	161	-	CR for 36.212 on 256QAM and LC-MTC	12.1.0	12.2.0
08/12/14	RAN_66	RP-142106	163	3	CR for 36.212 on 256QAM and LC-MTC	12.2.0	12.3.0
08/12/14	RAN_66	RP-142098	164	3	Clarification of PUSCH rate matching with SRS	12.2.0	12.3.0
08/12/14	RAN_66	RP-142107	166	-	Introduction of Dual Connectivity feature into 36.212	12.2.0	12.3.0
09/03/15	RAN_67	RP-150366	162	3	Introduction of D2D feature into 36.212	12.3.0	12.4.0
15/06/15	RAN_68	RP-150936	169	-	Corrections on eIMTA RRC parameter naming	12.4.0	12.5.0
15/06/15	RAN_68	RP-150937	171	1	Correction for 36.212 on soft buffer assumption	12.4.0	12.5.0
14/09/15	RAN_69	RP-151466	174	1	Introducing 4-layer MIMO transmission in TM3 and TM4	12.5.0	12.6.0
14/09/15	RAN_69	RP-151467	175	2	Introduction of MIMO capability signalling for intra-band contiguous CA	12.50	12.6.0
07/12/15	RAN_70	RP-152038	177	-	Correction on rank indication bit widths	12.6.0	12.7.0
07/12/15	RAN_70	RP-152027	178	1	Introduction of Rel 13 feature of eCA	12.7.0	13.0.0
07/12/15	RAN_70	RP-152025	179	1	Introduction of EB/FD-MIMO	12.7.0	13.0.0
07/12/15	RAN_70	RP-152026	180	2	Introduction of Rel 13 feature of LAA	12.7.0	13.0.0
07/12/15	RAN_70	RP-152031	182	-	Introduction of Rel 13 features for SC-PTM	12.7.0	13.0.0

Samsung Exhibit 1017, Page 121 of 121