Trials@uspto.gov
Tel: 571-272-7822

Paper 11
Date: November 7, 2023

UNITED STATES PATENT AND TRADEMARK OFFICE

BEFORE THE PATENT TRIAL AND APPEAL BOARD

NETFLIX, INC.,
Petitioner,

v.

GOTV STREAMING, LLC,
Patent Owner.

IPR2023-00757
Patent 8,989,715 B2

Before RICHARD M. LEBOVITZ, BRIAN J. McNAMARA, and STEVEN M. AMUNDSON, *Administrative Patent Judges*.

AMUNDSON, *Administrative Patent Judge*.

DECISION
Granting Institution of *Inter Partes* Review
35 U.S.C. § 314

I. INTRODUCTION

Netflix, Inc. ("Petitioner") filed a Petition requesting an *inter partes* review of claims 1–20 in U.S. Patent No. 8,989,715 B2 (Exhibit 1001, "the '715 patent") under 35 U.S.C. §§ 311–319. Paper 2 ("Pet."). GoTV Streaming, LLC ("Patent Owner") filed a Preliminary Response. Paper 8 ("Prelim. Resp."). No further briefing was requested or authorized.

Under 37 C.F.R. § 42.4(a), we have authority to determine whether to institute an *inter partes* review. We may institute an *inter partes* review only if "the information presented in the petition filed under section 311 and any response filed under section 313 shows that there is a reasonable likelihood that the petitioner would prevail with respect to at least 1 of the claims challenged in the petition." 35 U.S.C. § 314(a) (2018). The "reasonable likelihood" standard is "a higher standard than mere notice pleading" but "lower than the 'preponderance' standard to prevail in a final written decision." *Hulu, LLC v. Sound View Innovations, LLC*, IPR2018-01039, Paper 29 at 13 (PTAB Dec. 20, 2019) (precedential).

Based on the current record and for the reasons explained below, Petitioner has shown that there is a reasonable likelihood that it would prevail with respect to at least one of the challenged claims. Thus, we institute an *inter partes* review of claims 1–20 in the '715 patent on all challenges included in the Petition.

II. BACKGROUND

A. Real Parties in Interest

Petitioner identifies the following real parties in interest: Netflix, Inc. and Netflix Streaming Services, Inc. Pet. 78. Patent Owner identifies itself as the real party in interest. Paper 4, 2. Additionally, "although Patent

Owner does not believe Phunware Inc. ('Phunware') is a real party-in-interest to this proceeding, out of an abundance of caution, Patent Owner discloses Phunware." *Id.* The parties do not raise any issue about real parties in interest.

B. Related Matters

Petitioner and Patent Owner identify the following civil action as a related matter involving the '715 patent: *GoTV Streaming, LLC. v. Netflix, Inc.*, No. 2:22-cv-07556 (C.D. Cal. filed Oct. 17, 2022) (the "California case"). Pet. 1, 75 n.18, 78; Paper 4, 2; Prelim. Resp. 59.

Patent Owner identifies the following Board proceedings as related matters:

- *Netflix, Inc. v. GoTV Streaming, LLC*, IPR2023-00758 (PTAB filed April 7, 2023) (Patent 8,478,245 B2); and
- *Netflix, Inc. v. GoTV Streaming, LLC*, IPR2023-00759 (PTAB filed April 20, 2023) (Patent 8,103,865 B2).

Paper 4, 2.

C. The '715 Patent (Exhibit 1001)

The '715 patent, titled "Method and System for Rendering Content on a Wireless Device," issued on March 24, 2015, from an application filed on April 18, 2013. Ex. 1001, codes (22), (45), (54). The patent identifies that application as a continuation of an application filed on August 1, 2007. *Id.* at 1:6–7, code (63). The patent states that the invention relates to "the field of wireless communication systems" and more particularly to "a method and system for rendering applications on a wireless device." *Id.* at 1:13–16; *see id.* at code (57).

The '715 patent explains that an "increase in the number of wireless devices has also increased the demand for various applications to run on

various wireless devices." Ex. 1001, 1:25–27; *see id.* at 5:47–48. Because "each wireless device is unique," however, "each application must be tailored in accordance with the wireless device attributes to fully utilize the capabilities of the wireless device." *Id.* at 1:37–40; *see id.* at 5:48–50. For instance, "to utilize the entire display of the wireless device, the application must be tailored to render the application in accordance with the display size and resolution of the wireless device." *Id.* at 1:40–43. But tailoring "each application to a given wireless device type has increased the cost of developing applications." *Id.* at 1:45–47.

The '715 patent identifies a need to "not only relieve software vendors from tailoring their applications for a given wireless device type but to provide an output that is device specific based on the wireless device attributes where the output is generated from a generic application." Ex. 1001, 2:22–26. According to the patent, embodiments of the invention "relieve software vendors from tailoring their applications based on each wireless device type because the server tailors the output of a generic application based on the wireless device capability." *Id.* at 2:33–36, 5:50–54; *see id.* at 4:17–21, 6:34–37, 20:10–21.

The '715 patent's Figure 1A (reproduced below) depicts an exemplary communication system according to an embodiment of the invention:

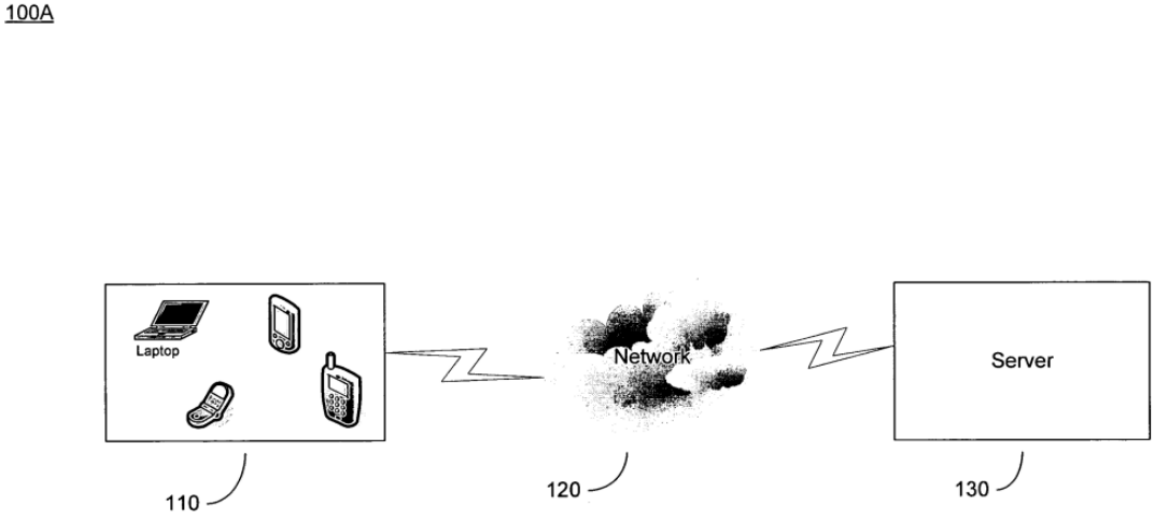

FIGURE 1A

Figure 1A illustrates "an exemplary communication system 100A" including wireless devices 110 coupled through network 120 to server 130. Ex. 1001, 5:61–66, Fig. 1A. A wireless device 110 includes a software program or "client" that, among other things, "sends user input and other data to" server 130 for processing. *Id.* at 6:11–13, 6:16–20; *see id.* at 7:38–39, 7:50–54.

Server 130 "executes a generic application" in that "it is not specific to any device or any set of device capabilities." Ex. 1001, 6:6–9. Server 130 "translate[s] the output of the application to a device specific set

of commands for transmission to the device 110 for rendering," thereby "tailoring the output of the generic application based on the wireless device type." *Id.* at 6:9–11, 6:24–27.

For example, server 130 provides a "series of basic commands, precompiled and ready for audio and video rendering by the wireless device." Ex. 1001, 6:27–29; *see id.* at 13:13–17, 15:66–16:2, 19:66–67, Fig. 7 (step 780). The "basic commands are discrete low level rendering commands" for the wireless device and specify "page layout information" for "display and audio rendering" at the wireless device. *Id.* at 6:29–31, 13:20–23; *see id.* at 2:44–47, 3:61–63, 16:61–62, 17:65–18:2, 18:11–12, 19:61–62. The "basic commands are written in a device independent syntax but tailored based on the wireless device rendering capability" such that "the parameters of the basic commands are based on the wireless device capability." *Id.* at 7:43–45, 18:58–61; *see id.* at 10:65–11:1, 13:17–20, 18:7–11, 19:63–65.

The '715 patent's Figure 1B (reproduced below) depicts an exemplary wireless device protocol stack:

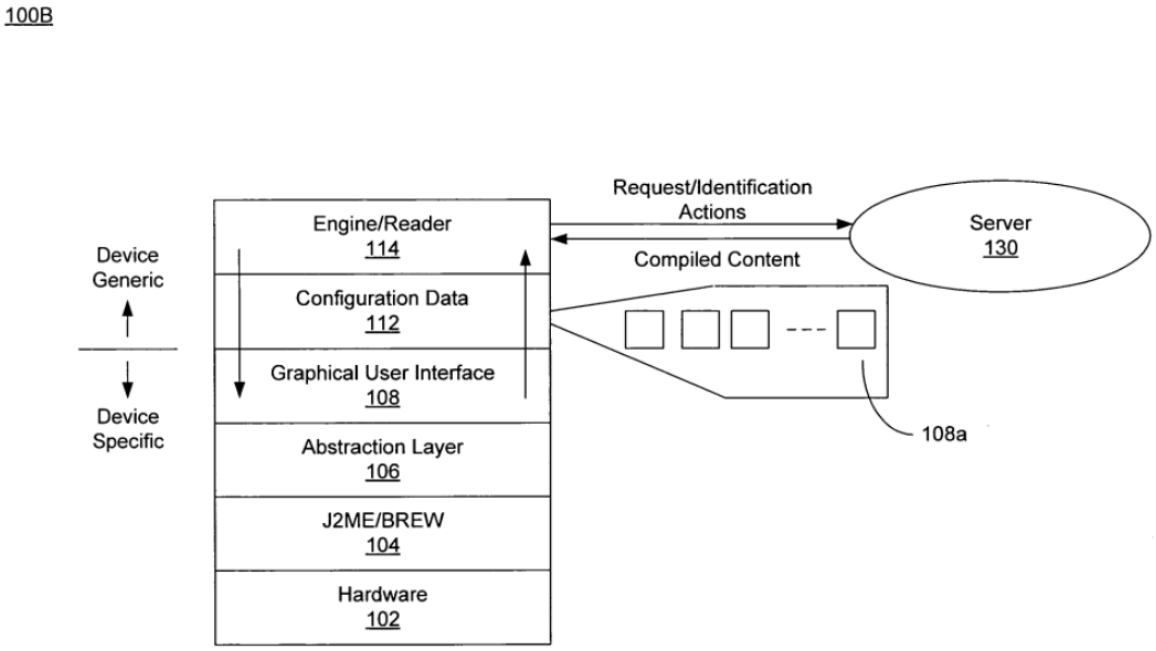

FIGURE 1B

Figure 1B illustrates "an exemplary wireless device protocol or software stack 100B" including the following components:

- "a hardware component 102";
- "a binary runtime for wireless device (BREW) and/or Java platform (J2ME) J2ME/BREW 104";
- "an abstraction layer 106";
- "a graphical user interface 108";
- "a configuration data 112"; and
- "a reader/engine 114."

Ex. 1001, 6:45–52, Fig. 1B. In one embodiment, "the graphical user interface 108, abstraction layer 106, J2ME/BREW 104 and the hardware layer 102 are device specific," while "the engine/reader 114 and the configuration data 112 may be device generic in terms of the syntax they use to operate." *Id.* at 6:52–57, Fig. 1B.

As Figure 1B shows, graphical user interface 108 includes "a number of individual rendering blocks 108a that perform discrete rendering operations to render a received page description" provided by server 130. Ex. 1001, 7:18–20, Fig. 1B; *see id.* at 3:29–41. Examples of rendering blocks 108a include "an edit box for entering text, static text for displaying text, an image, a pop-up menu which may appear in response to a user interaction, a drop-down menu list," "sound for controlling audio," "video to display a video with visual control panel," a "check box/radio button to enable selection/de-selection of items," "a table for displaying data in a tabular form," and "a calendar for displaying and enabling selection/de-selection of a date." *Id.* at 8:25–41; *see id.* at 8:44–10:55.

Configuration data 112 "may be a set of low level instructions" programmed into rendering blocks 108a that cause "the graphical user interface to operate and render data (e.g., 'look') a certain way." Ex. 1001, 7:59–63, 8:19–20; *see id.* at 10:56–58, 18:40–42. Configuration data 112 "may include text fonts, text colors, background colors, background images, border thickness, border colors," and images, e.g., images of icons. *Id.* at 8:3–15; *see id.* at 8:44–10:55, 12:64–13:6. The '715 patent uses the terms "configuration data" and "custom configuration" interchangeably. *Id.* at 7:67–8:2.

Engine/reader 114 communicates with server 130 via "a device generic syntax to read the basic commands of a page description." Ex. 1001, 7:32–34. Engine/reader 114 may send the following information to server 130:

(1) "a message that includes a request to access a generic application as well as the identification of the wireless device type"; and

(2) "user actions and other state information."

Id. at 7:34–39. Engine/reader 114 may receive from server 130 "compiled content" that "includes a series of basic commands for rendering the requested application." *Id.* at 7:39–42; *see id.* at 2:44–47, 10:62–65. Engine/reader 114 may receive from graphical user interface 108 "additional data" in response to "a user interaction (e.g., selecting an icon) and may transmit that data to the server as an event." *Id.* at 7:50–54.

A "page description contains basic commands" that may specify "the horizontal and vertical coordinates, the width, the height, the type of component to be displayed (e.g., text, image, video, audio and the like)," and "the unique identification of the rendering block to be used to render the component." Ex. 1001, 13:24–32. Graphical user interface 108 uses a page description obtained from the server to "render the page of the application based on the received basic commands and the customized preprogrammed plurality of rendering blocks." *Id.* at 11:1–3; *see id.* at 18:62–19:3, Fig. 6 (steps 650 and 660).

The '715 patent's Figure 3 (reproduced below) depicts an exemplary wireless device:

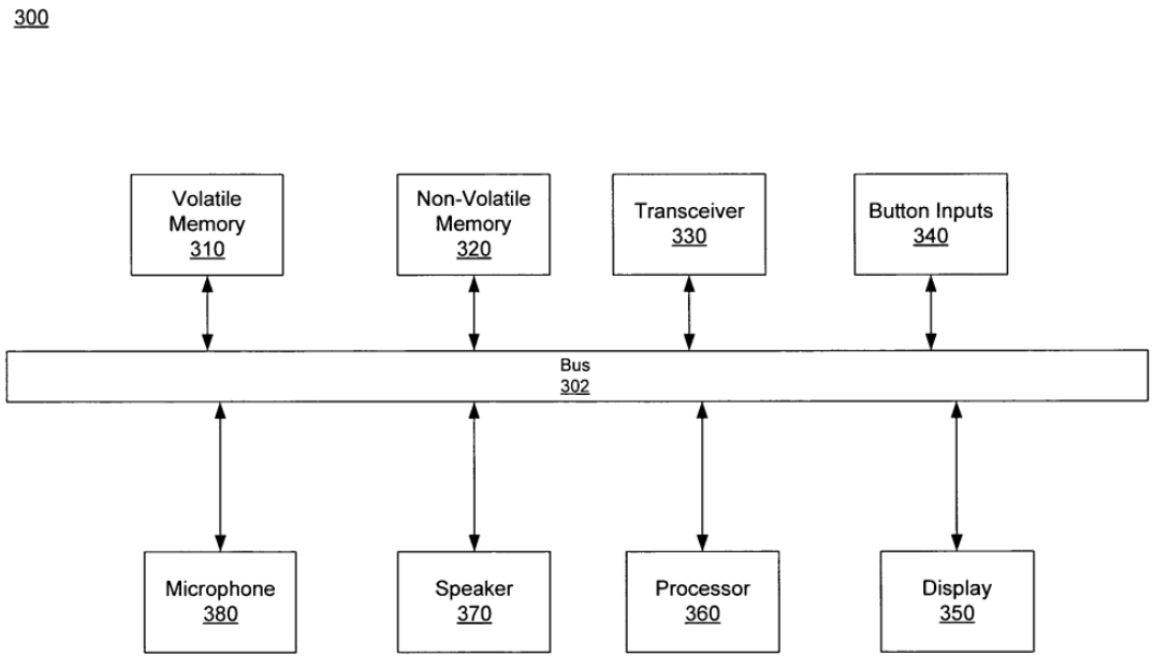

FIGURE 3

Figure 3 illustrates exemplary wireless device 300 including the following components coupled to bus 302:

- volatile memory 310;
- non-volatile memory 320;
- transceiver 330;
- button inputs 340;
- display 350;
- processor 360;
- speaker 370; and

- microphone 380.

See Ex. 1001, 15:1–53, Fig. 3.

Transceiver 330 facilitates "wireless communication with a remote server." Ex. 1001, 15:36–37. For instance, transceiver 330 "may receive a series of basic commands from a remote server that may be used to render application and/or content on the display 350." *Id.* at 15:38–40.

Button inputs 340 "may be used to navigate a website, enter email addresses, enter telephone numbers and the like." Ex. 1001, 15:43–45. Button inputs 340 may include "soft key buttons, a plurality of mechanical buttons, a rotating input component, a sliding input component, a voice activation component and the like." *Id.* at 15:45–48.

A client on a wireless device may cache "downloaded compiled content such that it can be retrieved at a later time." Ex. 1001, 13:36–38. For instance, a client on a wireless device may cache a "displayed page such that the client can browse back without having to download the page again" when "surfing the Internet." *Id.* at 13:38–40. Additionally, "[d]uring the user navigation, the client may keep the path history of the user such that the user can press the 'back' key to go to the previous screen without requesting for the page to be downloaded again." *Id.* at 14:45–48.

The '715 patent's Figure 4 (reproduced below) depicts an exemplary received compiled page description:

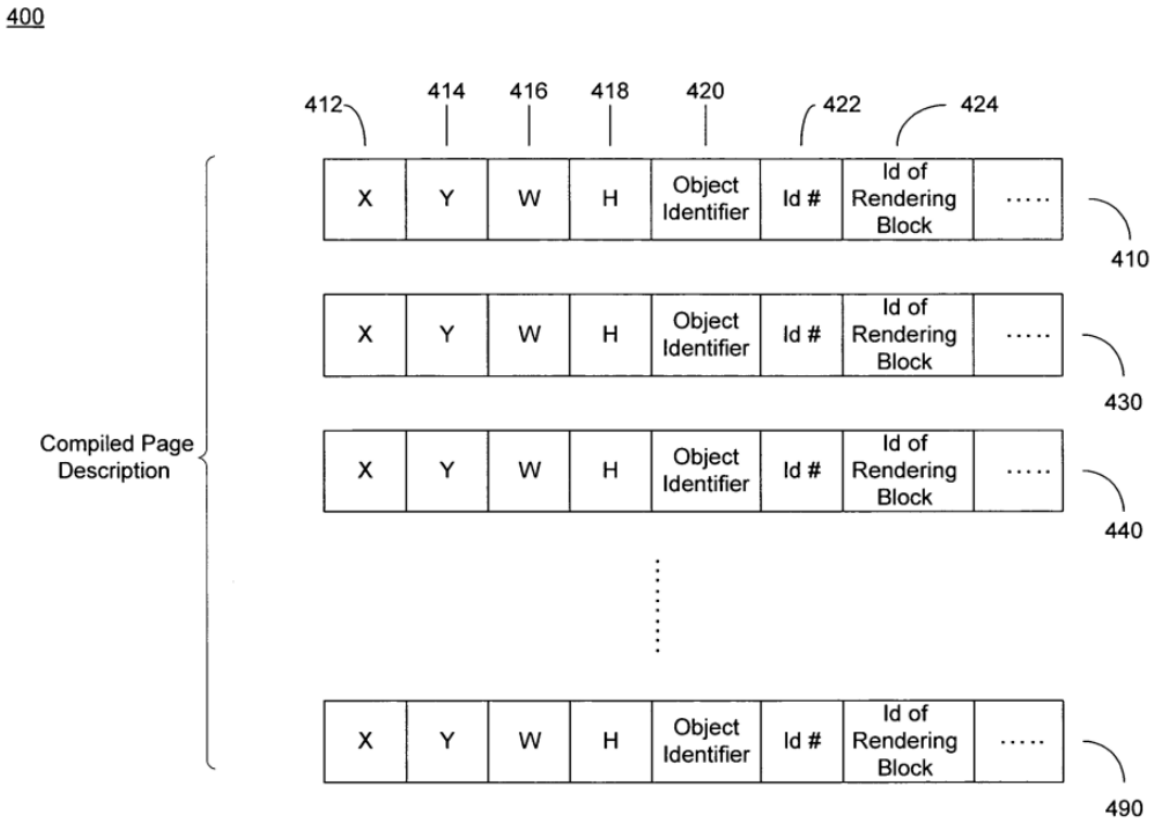

FIGURE 4

Figure 4 illustrates "an exemplary received compiled page description 400" including a "series of basic commands," e.g., commands 410, 430, 440, and 490. Ex. 1001, 15:54–57, 15:63–65, 18:12–14, Fig. 4. "Each basic command may describe a given component on the page of the requested application to be rendered." *Id.* at 15:57–59. The "series of basic commands" in a compiled page description forms "a single unified page to be rendered by the wireless device." *Id.* at 15:63–65.

As an example, "basic command 410 may be a description for rendering an image" and with "descriptions for rendering [the] image by specifying" (1) "the Cartesian coordinates 412 and 414 of a screen region" and (2) "the width 416 and the height 418 of the screen region to include [the] image." Ex. 1001, 15:60–61, 16:2–7. As another example, "basic command 430 may be the description for rendering a video clip." *Id.* at 15:61–62.

As Figure 4 shows, a basic command may include the following:

- "an object identifier 420" for an object or renderable component, such as an image;
- "an identification number 422" for the object or renderable component; and
- "an identification of a rendering block 424" to be used to render the object or renderable component.

Ex. 1001, 16:16–24, Fig. 4; *see id.* at 13:29–30.

The '715 patent's Figure 5 (reproduced below) depicts an exemplary remote server:

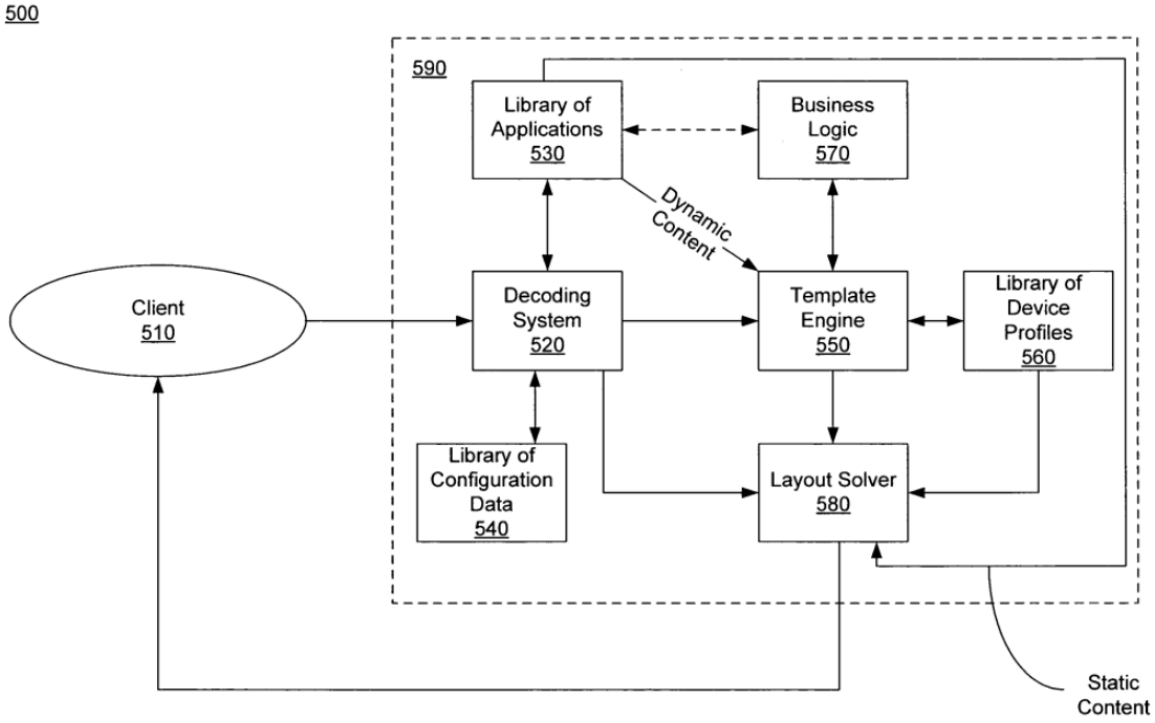

FIGURE 5

Figure 5 illustrates exemplary remote server 590 including the following components:

- decoding system 520;
- library of applications 530;
- library of configuration data 540;
- template engine 550;
- library of device profiles 560;
- business logic 570; and
- layout solver 580.

See Ex. 1001, 16:31–17:64, Fig. 5.

When decoding system 520 receives a request from client 510, decoding system 520 accesses (1) library of applications 530 to "locate and execute the requested application" and (2) library of configuration data 540 "where each application may have a corresponding custom configuration." Ex. 1001, 16:39–41, 16:50–52; *see id.* at 19:25–29. Then, decoding system 520 sends a message to client 510 "identifying the custom configuration." *Id.* at 16:53–56; *see id.* at 19:32–34.

Template engine 550 receives the following: (1) a generic template from either decoding system 520 or library of applications 530 and (2) dynamic data from business logic 570. Ex. 1001, 17:3–6, 17:8–10, 17:17–18, 17:48. Template engine 550 merges the dynamic data and the generic template. *Id.* at 17:6–8; *see id.* at 3:31–34.

After merging the dynamic data and the generic template, template engine 550 sends a "high level and dynamic template," e.g., in extensible markup language (XML) format, to layout solver 580. Ex. 1001, 17:22–26, 17:53–54; *see id.* at 3:34–40. Also, decoding system 520 may send a "static page" to layout solver 580. *Id.* at 16:64–66; *see id.* at 3:48–50, 17:54–56.

After receiving a "high level and dynamic template" and/or "static page," layout solver 580 "translates the template and/or static page into a series of basic commands based on the device profile and device capabilities." Ex. 1001, 3:54–57, 17:56–59. Layout solver 580 may access library of device profiles 560 to determine the device capabilities and then tailor the received information based on the device capabilities. *Id.* at 17:60–64; *see id.* at 3:51–54, 19:48–51, 19:54–57.

Server 590 transmits the series of basic commands to "client 510 for rendering." Ex. 1001, 18:11–12, 19:66–67. For example, "the basic commands are the compiled page description 400" as illustrated in Figure 4. *Id.* at 18:12–14, Fig. 4.

D. The Challenged Claims

Petitioner challenges the following claims:

- independent claim 1 for a method of generating content that is renderable by a wireless device;
- claims 2–8 that depend directly or indirectly from claim 1;
- independent claim 9 for a non-transitory computer-readable medium;
- claims 10–16 that depend directly or indirectly from claim 9;
- independent claim 17 for a server programmed to generate content that is renderable by a wireless device; and
- claims 18–20 that depend directly from claim 17.

Pet. 1–2, 25–73.

Claims 1 and 17 exemplify the challenged claims and read as follows (with formatting added for clarity and with bracketed numbers and letters added for reference purposes):[1]

> 1. [1pre] A method of generating content that is renderable by a wireless device, said method comprising:
>
> [1a] transmitting, to said wireless device, an identification of a custom configuration of a plurality of rendering blocks of said wireless device,

[1] We use the same numbers and letters that Petitioner uses to identify the claim language. *See* Pet. vi, ix–x (Listing of Challenged Claims).

[1b] wherein said custom configuration is associated with an application and configures said plurality of rendering blocks to render content in a manner customized to said application; and

[1c] transmitting, to said wireless device, compiled content comprising (i) first compiled content specific to a first page of said application and (ii) second compiled content specific to a second page of said application,

[1d] wherein said compiled content is generated in part from execution of said application,

[1e] wherein said compiled content comprises render commands expressed in a syntax that is generic to said wireless device, and

[1f] wherein said custom configuration is applicable to said first and second compiled content,

[1g] wherein said compiled content and said custom configuration are usable by a graphical user interface comprising said plurality of rendering blocks to generate renderable content based on said compiled content and said custom configuration.

17. [17pre] A server that is programmed to generate content that is renderable by a wireless device, comprising:

[17a] a library of applications;

[17b] a library of custom configuration data comprising a custom configuration that configures a plurality of rendering blocks of said wireless device to render content in a manner customized to an application from said library of applications requested by said wireless device; and

[17c] a layout solver that transmits compiled content to said wireless device, said compiled content comprising (i) first compiled content specific to a first page of said application and (ii) second compiled content specific to a second page of said application,

[17d] wherein said compiled content is generated in part from execution of said application by said server,

> [17e] wherein said compiled content comprises render commands expressed in a syntax that is generic to said wireless device, and
>
> [17f] wherein said custom configuration is applicable to said first and second compiled content,
>
> [17g] wherein said compiled content and said custom configuration are usable by a graphical user interface comprising said plurality of rendering blocks to generate renderable content based on said compiled content and said custom configuration.

Ex. 1001, 20:40–62, 22:19–43.

E. The Asserted References

For its challenge, Petitioner relies on the following references:

Name	Reference	Exhibit
Hariki	US 2007/0150617 A1, published June 28, 2007 (based on an application filed July 25, 2006)	1006
Harris	US 2003/0023755 A1, published January 30, 2003 (based on an application filed December 18, 2001)	1007

Pet. 2, 25–73. Petitioner asserts that Hariki qualifies as prior art under § 102(a) and that Harris qualifies as prior art under § 102(b). *Id.* at 2; *see* 35 U.S.C. § 102(a)–(b) (2006).[2]

At this stage of the proceeding, Patent Owner does not dispute that each reference qualifies as prior art. *See, e.g.*, Prelim. Resp. 15–58.

[2] The Leahy-Smith America Invents Act ("AIA"), Pub. L. No. 112-29, 125 Stat. 284 (2011), amended 35 U.S.C. § 102 and § 103 effective March 16, 2013. Because the effective filing date of the challenged claims predates the AIA's amendments to § 102 and § 103, this decision refers to the pre-AIA versions of § 102 and § 103.

F. The Asserted Challenge to Patentability

Petitioner asserts the following challenge to patentability:

Claim(s) Challenged	35 U.S.C. §	Reference(s)/Basis
1–20	103(a)	Hariki, Harris

Pet. 2, 25–73.

G. Testimonial Evidence

To support its challenges, Petitioner relies on the declaration of Benjamin B. Bederson, Ph.D. (Exhibit 1002). Dr. Bederson states, "I received a B.S. degree in Computer Science with a minor in Electrical Engineering in 1986 from the Rensselaer Polytechnic Institute. I received M.S. and Ph.D. degrees in Computer Science in 1989 and 1992, both from New York University," and "am currently Professor Emeritus of Computer Science at the University of Maryland." Ex. 1002 ¶¶ 6, 31. Dr. Bederson also states, "I have been retained by counsel for Netflix Inc." and "have been asked to opine on whether the '715 patent is anticipated and/or rendered obvious by the prior art." *Id.* ¶¶ 1–2.

At this stage of the proceeding, Patent Owner provides excerpts concerning claim construction from a declaration submitted in the California case, but Patent Owner does not introduce testimonial evidence responding to Dr. Bederson's testimony. *See* Prelim. Resp. 65; Ex. 2017 (Excerpts from the Corrected Declaration of Dr. John Villasenor).

III. DISCRETIONARY DENIAL IN VIEW OF PARALLEL LITIGATION

Under § 314(a), the Director possesses "broad discretion" in deciding whether to institute an *inter partes* review. *See* 35 U.S.C. § 314(a); *Saint Regis Mohawk Tribe v. Mylan Pharm. Inc.*, 896 F.3d 1322, 1327 (Fed. Cir.

2018). The Director is "permitted, but never compelled," to institute an *inter partes* review. *Harmonic Inc. v. Avid Tech., Inc.*, 815 F.3d 1356, 1367 (Fed. Cir. 2016). The Board decides whether to institute an *inter partes* review on the Director's behalf. 37 C.F.R. § 42.4(a) (2023).

Patent Owner argues that we should exercise our discretion under § 314(a) to deny institution in view of the California case. *See* Prelim. Resp. 59–66; *supra* § II.B. Petitioner argues that we should decline to exercise our discretion under § 314(a) to deny institution. *See* Pet. 74–77. For the reasons explained below, we decline to exercise our discretion under § 314(a) to deny institution in view of the California case. *See infra* §§ III.C, V.C.

A. Nonexclusive Factors to Consider

When deciding whether to exercise discretion under § 314(a) to deny institution, the Board has considered the status of litigation involving the parties in light of the AIA's objective "to provide an effective and efficient alternative to district court litigation." *NHK Spring Co. v. Intri-Plex Techs., Inc.*, IPR2018-00752, Paper 8 at 12, 19–20 (PTAB Sept. 12, 2018) (precedential). The Board has set forth the following nonexclusive factors to consider when determining whether to exercise discretion under § 314(a) to deny institution due to the advanced state of parallel litigation:

(1) whether the court granted a stay or evidence exists that one may be granted if the Board institutes a trial;

(2) the proximity of the court's trial date to the Board's projected statutory deadline for a final written decision;

(3) the investment in the parallel litigation by the court and the parties;

(4) the overlap in the issues raised by the petition and the issues in the parallel litigation;

(5) whether the petitioner and the defendant in the parallel litigation are the same party; and

(6) other circumstances that impact the Board's exercise of discretion, including the merits.

Apple Inc. v. Fintiv, Inc., IPR2020-00019, Paper 11 at 5–6 (PTAB Mar. 20, 2020) (precedential) ("*Fintiv*").

These factors "relate to whether efficiency, fairness, and the merits support the exercise of authority to deny institution in view of an earlier trial date in the parallel proceeding." *Fintiv*, IPR2020-00019, Paper 11 at 6. Further, *Fintiv* instructs the Board to take "a holistic view of whether efficiency and integrity of the system are best served by denying or instituting review." *Id.*; *see* PTAB Consolidated Trial Practice Guide at 55–56, 58 (Nov. 2019) ("CTPG").[3]

We also follow the Interim Procedure for Discretionary Denials in AIA Post-Grant Proceedings with Parallel District Court Litigation (June 21, 2022) ("Interim Procedure").[4]

B. Analysis

1. FACTOR (1): STAY OF PARALLEL LITIGATION

Patent Owner asserts that factor (1) favors discretionary denial. Prelim. Resp. 59.

Petitioner asserts that factor (1) is neutral. Pet. 74.

---

[3] Available at https://www.uspto.gov/TrialPracticeGuideConsolidated.
[4] Available at https://www.uspto.gov/sites/default/files/documents/interim_proc_discretionary_denials_aia_parallel_district_court_litigation_memo_20220621_.pdf.

In the California case, the jury has returned a verdict, and the trial has ended. *See* Ex. 3003. Because the trial in the California case has ended, factor (1) favors discretionary denial. *See Samsung Bioepis Co. v. Regeneron Pharm., Inc.*, IPR2023-00739, Paper 9 at 55 (PTAB Oct. 20, 2023) (determining that factor (1) favored discretionary denial due to the "trial having already taken place").

2. FACTOR (2): TRIAL DATE IN PARALLEL LITIGATION

For factor (2), the Interim Procedure states as follows:

> Parties may present evidence regarding the most recent statistics on median time-to-trial for civil actions in the district court in which the parallel litigation resides for the PTAB's consideration. Where the parties rely on time-to-trial statistics, the PTAB will also consider additional supporting factors such as the number of cases before the judge in the parallel litigation and the speed and availability of other case dispositions.
>
> . . . The PTAB will weigh this factor against exercising discretion to deny institution under *Fintiv* if the median time-to-trial is around the same time or after the projected statutory deadline for the PTAB's final written decision.

Interim Procedure at 8–9 (footnote omitted).

Patent Owner asserts that factor (2) favors discretionary denial. Prelim. Resp. 60–61.

Petitioner asserts that factor (2) "weighs against discretionary denial" based on median time-to-trial statistics. Pet. 75.

The Board's projected statutory deadline for a final written decision is November 2024. The trial in the California case has ended. *See* Ex. 3003. Because the trial in the California case has ended, factor (2) favors discretionary denial.

3. FACTOR (3): INVESTMENT IN PARALLEL LITIGATION

Fintiv instructs the Board to consider "the amount and type of work already completed in the parallel litigation by the court and the parties at the time of the institution decision." *Fintiv*, IPR2020-00019, Paper 11 (precedential) at 9.

Patent Owner asserts that factor (3) favors discretionary denial because fact and expert discovery have been completed in the California case, including depositions of "invalidity experts." Prelim. Resp. 63 (citing Ex. 2016, 1).

Petitioner asserts that factor (3) "weighs against discretionary denial." Pet. 76. Petitioner asserts that "expert reports have not been prepared on any issues" at the time of Petition filing (April 2023). *Id.* Petitioner also asserts that the Petition "comes over six months before petitioner's bar date." *Id.*

Based on the current record, factor (3) favors discretionary denial. At "the time of the institution decision," the trial in the California case has ended. *See* Ex. 3003.

4. FACTOR (4): OVERLAPPING ISSUES

Fintiv instructs the Board to consider whether another proceeding presents "the same or substantially the same" claims, grounds, arguments, evidence, and issues to avoid "redoing the work" of a district court and "the possibility of conflicting decisions." *Fintiv*, IPR2020-00019, Paper 11 (precedential) at 12–14; *see* Interim Procedure at 6.

The Interim Procedure explains that "the PTAB will not discretionarily deny institution in view of parallel district court litigation where a petitioner presents a stipulation not to pursue in a parallel proceeding the same grounds or any grounds that could have reasonably

been raised before the PTAB." Interim Procedure at 3 (citing *Sotera Wireless, Inc. v. Masimo Corp.*, IPR2020-01019, Paper 12 (PTAB Dec. 1, 2020) (precedential as to § II.A)); *see id.* at 7, 9. The Interim Procedure also explains that such a stipulation (a *Sotera* stipulation) "mitigates concerns of potentially conflicting decisions and duplicative efforts between the district court and the PTAB." *Id.* at 7.

Patent Owner asserts that factor (4) favors discretionary denial because Hariki and Harris are "at issue" in the California case and there is "substantial overlap among the proceedings." Prelim. Resp. 63 & n.16 (citing Ex. 2017, 7). Patent Owner asserts that Petitioner's stipulation (discussed below) is "less than" a *Sotera* stipulation that agrees not to raise "any grounds that could have reasonably been raised in the petition." *Id.* at 64. Patent Owner also asserts that Petitioner's stipulation does not "mitigate the possibility of duplicative work or the possibility of conflicting decisions required to avoid discretionary denials." *Id.*

Petitioner asserts that factor (4) "weighs against discretionary denial" because Petitioner "stipulates that it will not pursue the ground identified in this Petition before the district court." Pet. 76 (citing *Sand Revolution II, LLC v. Cont'l Intermodal Grp.-Trucking LLC*, IPR2019-01393, Paper 24 at 11–12 (PTAB June 16, 2020) (informative)).

Petitioner's stipulation falls short of a *Sotera* stipulation, i.e., a stipulation "not to pursue in a parallel district court proceeding the same grounds as in the petition or any grounds that could have reasonably been raised in the petition." *See* Interim Procedure at 7, 9; *Sotera*, IPR2020-01019, Paper 12 at 13–14, 18; Pet. 76. But Petitioner's stipulation does reduce the overlap relating to the challenge presented in the Petition and

"mitigates to some degree the concerns of duplicative efforts between the district court and the Board, as well as concerns of potentially conflicting decisions." *See Sand Revolution*, IPR2019-01393, Paper 24 at 12.

For these reasons, factor (4) weighs against discretionary denial. *See, e.g.*, *Sand Revolution*, IPR2019-01393, Paper 24 at 12; *Google LLC v. Jawbone Innovations, LLC*, IPR2022-00649, Paper 13 at 11 (PTAB Oct. 31, 2022).

5. FACTOR (5): PETITIONER'S STATUS IN PARALLEL LITIGATION

"If a petitioner is unrelated to a defendant in an earlier court proceeding, the Board has weighed this fact against exercising discretion to deny institution." *Fintiv*, IPR2020-00019, Paper 11 (precedential) at 13–14.

The parties do not dispute that Petitioner is the defendant in the California case. *See* Pet. 77; Prelim. Resp. 64. Hence, factor (5) favors discretionary denial. *See Sotera*, IPR2020-01019, Paper 12 at 19 (citing *Fintiv*, IPR2020-00019, Paper 15 (informative) at 15; *Sand Revolution*, IPR2019-01393, Paper 24 at 12–13).

6. FACTOR (6): OTHER CIRCUMSTANCES

Factor (6) concerns other circumstances and recognizes that a decision whether to exercise discretion under § 314(a) to deny institution should rest on "a balanced assessment of all the relevant circumstances in the case, including the merits." *Fintiv*, IPR2020-00019, Paper 11 (precedential) at 14; *see* CTPG at 58; Interim Procedure at 4. For example, "if the merits of a ground raised in the petition seem particularly strong on the preliminary record, this fact has favored institution." *Fintiv*, IPR2020-00019, Paper 11 (precedential) at 14–15.

Also, Congress gave the Office "significant power to revisit and revise earlier patent grants" as a way to "improve patent quality and restore confidence in the presumption of validity that comes with issued patents." *Cuozzo Speed Techs., LLC v. Lee*, 579 U.S. 261, 272 (2016) (quoting H.R. Rep. No. 112-98, pt. 1, at 45, 48). "Consistent with Congress's giving the Office the authority to revisit issued patents, the PTAB will not deny institution based on *Fintiv* if there is compelling evidence of unpatentability." Interim Procedure at 5; *see id.* at 2, 4, 9.

If factors (1) through (5) do not favor discretionary denial, "the Board shall decline to discretionarily deny under *Fintiv* without reaching the compelling merits analysis." *CommScope Techs. LLC v. Dali Wireless, Inc.*, IPR2022-01242, Paper 23 at 4–5 (PTAB Feb. 27, 2023) (precedential). But if factors (1) through (5) favor discretionary denial, "the Board shall then assess compelling merits." *Id.* at 5.

Here, on balance, factors (1) through (5) favor discretionary denial. *See supra* §§ III.B.1–III.B.5 (finding that four factors favor discretionary denial and one factor does not favor discretionary denial). Because factors (1) through (5) favor discretionary denial, we assess compelling merits. *See CommScope*, IPR2022-01242, Paper 23 at 5. To provide better context when doing so, however, we assess compelling merits after addressing the patentability issues. *See infra* §§ IV.D, V.C. Based on the current record and for the reasons explained below, we determine that Petitioner presents compelling evidence of unpatentability for at least one challenged claim. *See infra* § V.C.

C. Conclusion Concerning Discretionary Denial in View of Parallel Litigation

Based on our assessment of compelling merits as discussed in more detail below (*see* Section V herein), we decline to exercise our discretion under § 314(a) to deny institution in view of the California case. *See* Interim Procedure at 2, 4–5, 9; *infra* § V.C. The Board "will not rely on the *Fintiv* factors to discretionarily deny institution in view of parallel district court litigation where a petition presents compelling evidence of unpatentability." Interim Procedure at 2. This comports with Congressional intent "to improve patent quality and restore confidence in the presumption of validity that comes with issued patents." *See Cuozzo*, 579 U.S. at 272; Interim Procedure at 4.

IV. PATENTABILITY ANALYSIS

A. Legal Principles: Obviousness

A patent may not be obtained "if the differences between the subject matter sought to be patented and the prior art are such that the subject matter as a whole would have been obvious at the time the invention was made to a person having ordinary skill in the art to which said subject matter pertains." 35 U.S.C. § 103(a) (2006). An obviousness analysis involves underlying factual inquiries including (1) the scope and content of the prior art; (2) differences between the claimed invention and the prior art; (3) the level of ordinary skill in the art; and (4) where in evidence, objective indicia of nonobviousness, such as commercial success, long-felt but unsolved needs, and failure of others.[5] *Graham v. John Deere Co.*, 383 U.S. 1, 17–18, 35–36

[5] Patent Owner does not address objective indicia of nonobviousness. *See, e.g.*, Prelim. Resp. 21–58.

(1966); *Apple Inc. v. Samsung Elecs. Co.*, 839 F.3d 1034, 1047–48 (Fed. Cir. 2016) (en banc). When evaluating a combination of references, an obviousness analysis should address "whether there was an apparent reason to combine the known elements in the fashion claimed by the patent at issue." *KSR Int'l Co. v. Teleflex Inc.*, 550 U.S. 398, 418 (2007).

We analyze the obviousness issues according to these principles.

B. Level of Ordinary Skill in the Art

Factors pertinent to determining the level of ordinary skill in the art include (1) the educational level of the inventor; (2) the type of problems encountered in the art; (3) prior-art solutions to those problems; (4) the rapidity with which innovations are made; (5) the sophistication of the technology; and (6) the educational level of workers active in the field. *Envtl. Designs, Ltd. v. Union Oil Co.*, 713 F.2d 693, 696–97 (Fed. Cir. 1983). Not all factors may exist in every case, and one or more of these or other factors may predominate in a particular case. *Id.* These factors are not exhaustive, but merely a guide to determining the level of ordinary skill in the art. *Daiichi Sankyo Co. v. Apotex, Inc.*, 501 F.3d 1254, 1256 (Fed. Cir. 2007). Moreover, the prior art itself may reflect an appropriate skill level. *Okajima v. Bourdeau*, 261 F.3d 1350, 1355 (Fed. Cir. 2001).

Petitioner asserts that a person of ordinary skill in the art at the time of the alleged invention "would have had a bachelor's degree in electrical or computer engineering, or a closely related scientific field such as computer science, and two to three years of work experience with remote page display rendering and/or remote server applications." Pet. 18. Petitioner also asserts that "any lack of work experience could be remedied with additional education (e.g., a Ph.D.) concentrating on multimedia content transmission

and/or remote server applications, and likewise, a lack of education can be remedied with additional work experience in multimedia content transmission and/or remote server applications (e.g., 4–5 years)." *Id.* (emphases omitted). Dr. Bederson's testimony supports Petitioner's assertions. *See* Ex. 1002 ¶¶ 36–38.

Regarding an ordinarily skilled artisan's educational level, Patent Owner "generally concurs" with Petitioner that the skilled artisan would have had "an electrical/computer engineering degree or a degree in a closely related field." Prelim. Resp. 20. Regarding an ordinarily skilled artisan's experience level, Patent Owner asserts that the skilled artisan would have had "a couple of years' experience in the 'field of wireless communication systems' and '[m]ore particularly, . . . method[s] and system[s] for rendering applications on a wireless device.'" *Id.* (alterations by Patent Owner) (quoting Ex. 1001, 1:13–16). Patent Owner also asserts that "[m]ore education may substitute for experience, and vice versa." *Id.*

Regarding an ordinarily skilled artisan's experience level, Petitioner's description requires slightly more experience ("two to three years") than Patent Owner's description ("a couple of years"). *See* Pet. 18; Prelim. Resp. 20. As for the type of experience, we discern no material difference between Petitioner's description ("remote page display rendering and/or remote server applications") and Patent Owner's description ("wireless communication systems" and "[m]ore particularly, . . . method[s] and system[s] for rendering applications on a wireless device"). *See* Pet. 18; Prelim. Resp. 20.

Based on the current record and for purposes of analysis, we accept Patent Owner's description of an ordinarily skilled artisan as consistent with

the ’715 patent and the asserted prior art. If the prior art renders the claimed subject matter obvious to a person with a lower skill level, then the prior art renders the claimed subject matter obvious to a person with a higher skill level. *See Innovention Toys, LLC v. MGA Entm’t, Inc.*, 637 F.3d 1314, 1323 (Fed. Cir. 2011); *Tokai Corp. v. Easton Enters., Inc.*, 632 F.3d 1358, 1369 (Fed. Cir. 2011). We note that our analysis for purposes of institution would not change if we accepted Petitioner’s description of an ordinarily skilled artisan.

During the instituted trial, we encourage the parties to address whether there are any differences between the respective descriptions of an ordinarily skilled artisan that would impact the patentability analysis. If so, the parties should explain how those differences impact the patentability analysis.

C. Claim Construction

We construe claim terms “using the same claim construction standard” that district courts use to construe claim terms in civil actions under 35 U.S.C. § 282(b). *See* 37 C.F.R. § 42.100(b). Under that standard, claim terms “are given their ordinary and customary meaning, which is the meaning the term would have to a person of ordinary skill in the art at the time of the invention.” *Power Integrations, Inc. v. Fairchild Semiconductor Int’l, Inc.*, 904 F.3d 965, 971 (Fed. Cir. 2018) (citing *Phillips v. AWH Corp.*, 415 F.3d 1303, 1312–13 (Fed. Cir. 2005) (en banc)). The meaning of claim terms may be determined by “look[ing] principally to the intrinsic evidence of record, examining the claim language itself, the written description, and the prosecution history, if in evidence.” *DePuy Spine, Inc. v. Medtronic*

Sofamor Danek, Inc., 469 F.3d 1005, 1014 (Fed. Cir. 2006) (citing *Phillips*, 415 F.3d at 1312–17).

Petitioner contends that "no express constructions of the claims are necessary to assess whether the prior art reads on the challenged claims" given the "close correlation" between the asserted references and the challenged claims. Pet. 19. Therefore, according to Petitioner, "the claims should be given their plain and ordinary meaning." *Id.*; *see id.* at 42 n.11.

Although Patent Owner "recapitulates key concepts" when explaining "many of the claim terms in view of" the '715 patent's "discussion of its embodiments," Patent Owner does not propose an explicit construction for any claim term. *See, e.g.*, Prelim. Resp. 8–15, 20–21, 55 n.10. Additionally, Patent Owner contends that Petitioner's reliance on "plain and ordinary meaning" in this proceeding conflicts with Petitioner's position in the California case where Petitioner proposed explicit constructions for the following claim terms: "render commands"/"rendering commands," "custom configuration," and "rendering blocks." *Id.* at 20–21, 65 (citing Ex. 2017, 4–5); *see* Ex. 2017, 4–5.[6]

"[O]nly those terms need be construed that are in controversy, and only to the extent necessary to resolve the controversy." *Vivid Techs., Inc. v. Am. Sci. & Eng'g, Inc.*, 200 F.3d 795, 803 (Fed. Cir. 1999); *see Nidec Motor Corp. v. Zhongshan Broad Ocean Motor Co.*, 868 F.3d 1013, 1017 (Fed. Cir. 2017). Based on the current record, we determine that no claim

[6] For Exhibit 2017 (Excerpts from the Corrected Declaration of Dr. John Villasenor), we follow Patent Owner's practice and cite to the page numbers that Patent Owner applied to the exhibit rather than the page numbers that appear in the declaration.

term requires an explicit construction to decide whether Petitioner satisfies the "reasonable likelihood" standard for instituting trial and the "compelling merits" standard.

As for Petitioner's proposed explicit constructions for certain claim terms in the California case, there is no requirement that a party present the same construction before the Board and the district court. *See, e.g.*, *Abbott Diabetes Care Inc. v. Dexcom, Inc.*, IPR2022-00913, Paper 14 at 11–17 (PTAB Nov. 3, 2022); *Sony Mobile Commc'ns AB v. Ancora Techs., Inc.*, IPR2021-00663, Paper 17 at 24–25 (PTAB June 10, 2021); *Huawei Techs. Co. v. WSOU Invs., LLC*, IPR2021-00228, Paper 9 at 24–25 (PTAB June 10, 2021).

Additionally, Patent Owner does not explain how Petitioner's proposed explicit constructions for certain claim terms in the California case conflict with how Petitioner applies those claim terms to the asserted references in this proceeding. *See, e.g.*, Prelim. Resp. 20–51, 65; *infra* § V.C.

In September 2023, when deciding summary-judgment motions, the district court in the California case provided explicit constructions for the following claim terms: "rendering command," "custom configuration," and "rendering blocks." Ex. 3004, 9–10. Based on the current record, those explicit constructions have no material bearing on the parties' respective positions in this proceeding. Hence, for purposes of this decision, we give the claim language its plain and ordinary meaning as Petitioner proposes.

D. Alleged Obviousness over Hariki and Harris: Claims 1–20

Petitioner contends that claims 1–20 are unpatentable under § 103(a) as obvious over Hariki and Harris. *See* Pet. 2, 25–73. Patent Owner

disputes Petitioner's contentions. *See* Prelim. Resp. 1–2, 21–58. Below, we provide overviews of Hariki and Harris, and then we consider the obviousness issues. As explained below, Petitioner establishes sufficiently for purposes of institution that the combined disclosures in Hariki and Harris teach the subject matter in claims 1, 2, 4–10, and 12–16 but not the subject matter in claims 3, 11, and 17–20.

1. OVERVIEW OF HARIKI (EXHIBIT 1006)

Hariki is a U.S. patent application publication titled "Resource Application Program Interface Utility for Changing User Interface Elements on Wireless Devices," filed on July 25, 2006, and published on June 28, 2007. Ex. 1006, codes (12), (22), (43), (54). Hariki states that the invention concerns "a user interface generation system for mobile communication devices." *Id.* ¶ 3; *see id.* ¶¶ 18–19, code (57).

Hariki explains that "certain mobile phone service and equipment providers provide user interface (UI) customization capabilities that allow users to personalize their phones or mobile devices with custom ringtones, background displays (wallpaper), menu configurations, and the like," thus enhancing "the marketability of a device." Ex. 1006 ¶ 5. A "customized user interface is referred to as a 'UI skin.'" *Id.* ¶ 24; *see id.* ¶ 5. "In general, UI skins allow a user to customize the 'look and feel' or application program environment of a device by altering display and/or sound output aspects of the device, such as backgrounds, title bars, buttons, alert sounds, and so on." *Id.* ¶ 24.

Hariki identifies deficiencies in conventional UI customization schemes. Ex. 1006 ¶¶ 6–7. Among other things, the "customization features of present devices typically do not allow the user to customize features

related to the execution of downloadable application programs or utilities, or provide comprehensive customization over all of the functions that may be integrated in the device." *Id.* ¶ 6. Hariki identifies a need for "a mobile device configuration system that allows modification of mobile device user interfaces or application programs without modification of the application programs themselves." *Id.* ¶ 9.

To address deficiencies in conventional UI customization schemes, Hariki discloses (1) a user interface authoring tool executed by a content-providing server and (2) a resource application programming interface (API) on a mobile device. Ex. 1006 ¶¶ 18–19, code (57). The resource API downloads a UI content package that may customize "files, links to files, and/or data or program objects associated with the configurable aspect of the user interface for each mobile device." *Id.* ¶ 19, code (57).

Hariki's Figure 1 (reproduced below) depicts a communications network system implementing a user interface authoring tool:

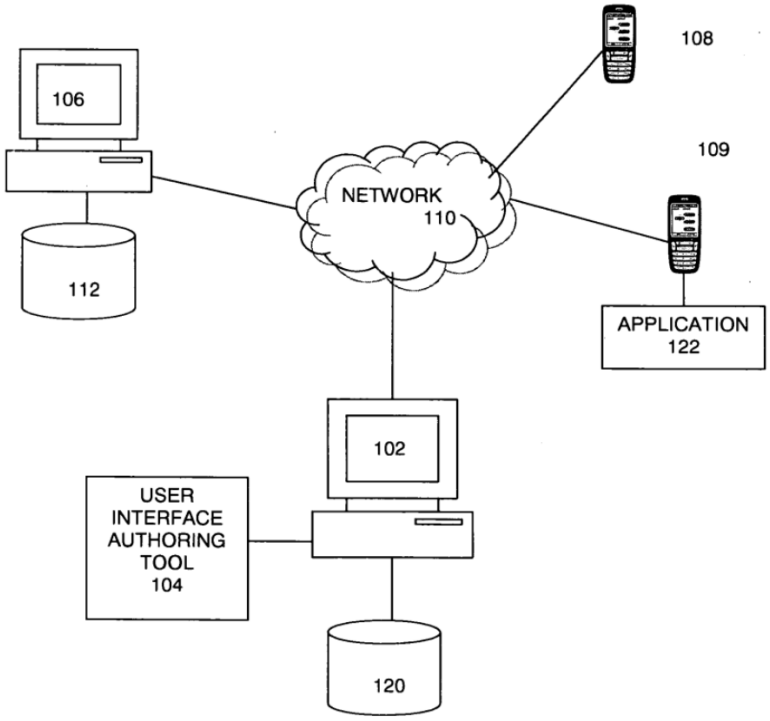

FIGURE 1

Figure 1 "illustrates a communications network system 100" including the following components:

(1) content-providing server 102 that "provides content data, application programs, diagnostic tools, program components, or any other content or executable objects" to mobile devices;

(2) user interface authoring tool 104 executed by server 102;

(3) server 106 that may provide content or function as a workstation;

(4) mobile devices 108 and 109, e.g., cellular phones "made by different manufacturers" or "any type of devices that have different user interface elements from one another";

(5) network 110, e.g., "a comprehensive telecommunications network that includes both a cellular phone network and the Internet";

(6) data store 112 for server 106, e.g., for storing "resource profiles and other associated data files";

(7) data store 120 for server 102, e.g., for storing "resource profiles and resource files for the different mobile devices"; and

(8) application program 122 that may "utilize[] the resources provided by the content provider" and may be (i) an object "displayed on the screen of the mobile device" or "played through a playback circuit (sound or video) of the mobile device," (ii) "an executable module (applet) executed by the mobile device," or (iii) "any program that can playback or perceive the image, video, sound files, etc. of the resources provided by" a UI content package.

Ex. 1006 ¶¶ 11, 20–22, 24–27, 31, 38, 40, 45–46, Fig. 1.

Server 102 "can be a World-Wide Web (WWW) server that stores data in the form of web pages and transmits these pages as Hypertext Markup Language (HTML) files over the Internet 110." Ex. 1006 ¶ 21. For instance, server 102 may execute "a web server process to serve web pages over network 110." *Id.* Additionally, mobile devices 108 and 109 may run "a web browser program to access the web pages served by" server 102, server 106, or "any other available content provider or supplemental server." *Id.*

Server 102 may provide a customized user interface or UI skin "developed by third party vendors, device manufacturers, application writers, and so on." Ex. 1006 ¶ 24; *see id.* ¶¶ 26, 28. For instance, "UI content objects are generated and made available for download through"

user interface authoring tool 104 executed by server 102. *Id.* ¶ 27. User interface authoring tool 104 "can represent a program or suite of programs, or even hardware circuits, or any combination thereof embodying instructions executed by one or more processing units in server 102." *Id.*

Hariki's Figure 2 (reproduced below) depicts a user interface authoring tool:

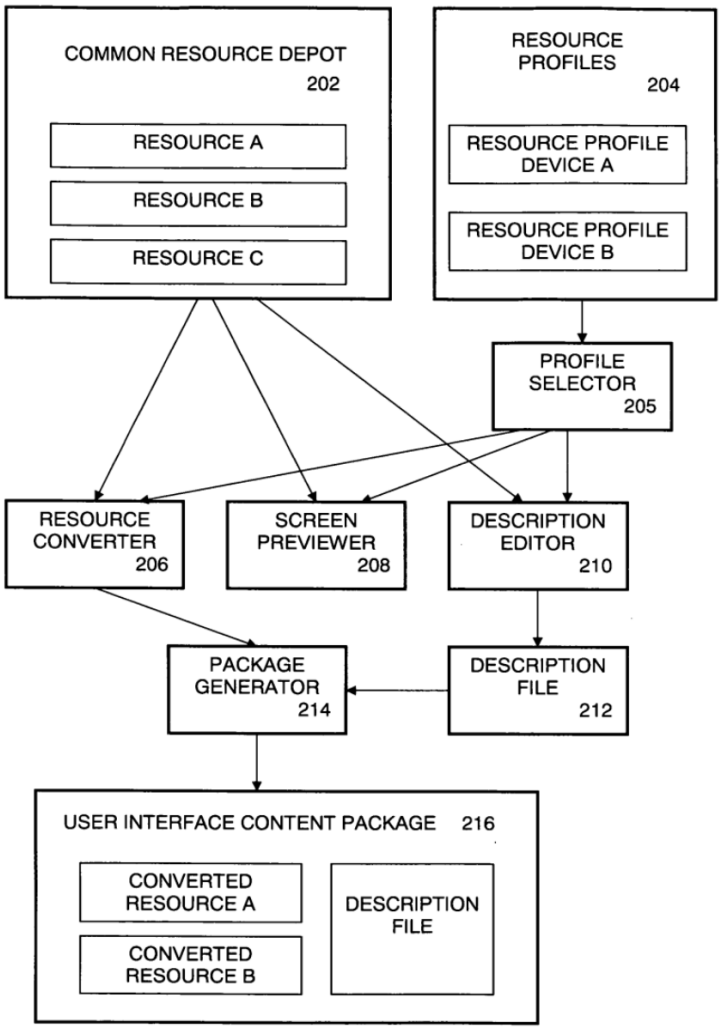

FIGURE 2

Figure 2 illustrates a user interface authoring tool including common resource depot 202, resource profiles 204, profile selector 205, resource converter 206, screen previewer 208, description editor 210, description

file 212, package generator 214, and UI content package 216. Ex. 1006 ¶¶ 12, 28–33, Fig. 2.

Common resource depot 202 contains resources comprising "files, links to files, and/or data or program objects associated with the configurable aspect of the user interface for each mobile device," such as "image files, sound files, screen layouts, icons, movies, and so on." Ex. 1006 ¶ 31; *see id.* ¶ 19, code (57). Each resource "(also referred to as a 'resource file') in resource depot 202 represents a file, location, directory, link, document, or similar object." *Id.* ¶ 31.

Resource profiles 204 comprise "user interface specifications for each mobile device" that "generally describe all relevant aspects of a UI element with regard to the device and any application programs that may be used on the device." Ex. 1006 ¶ 30; *see id.* ¶ 35. As shown in Figure 2, "a resource profile is provided for device A," e.g., corresponding to Figure 1's mobile device 108, and "a resource profile is provided for device B," e.g., corresponding to Figure 1's mobile device 109. *Id.* ¶ 30. Among other things, a resource profile may "specify the type, format, size, placement, and various other parameters for each user interface element for the device." *Id.* ¶ 35; *see id.* ¶ 19, code (57).

Profile selector 205 "selects a resource profile 204 depending upon the device model." Ex. 1006 ¶ 32. The "corresponding resource 202 for that model is then converted by resource converter 206" into "a format that corresponds to the appropriate resource profile 204." *Id.* ¶¶ 32, 35; *see id.* ¶ 36, Fig. 4. For instance, resource converter 206 performs "various different types of conversion operations, such as converting file formats (e.g., PNG [portable network graphics] to JPEG [joint photographic experts

group]), changing color formats (e.g., monochrome to 8-bit color), and so on." *Id.* ¶ 32; *see id.* ¶ 36. Thus, "if the resource is an image, it is converted to the appropriate size and file format," e.g., PNG to JPEG, that corresponds to the appropriate resource profile 204. *Id.* ¶ 35.

Screen previewer 208 "provides a utility to preview the user interface for the device based on the resource files." Ex. 1006 ¶ 32. Description editor 210 produces description file 212 "based on the selected resource profile 204 and resource file 202." *Id.* ¶ 33; *see id.* ¶ 36, Fig. 4. "In general, a description file describes the information of the resource files contained in" a UI content package and includes references to the converted resources, e.g., by specifying a resource ID, a file path (location), and a file type. *Id.* ¶¶ 46, 48; *see id.* ¶¶ 33, 49–50.

Hariki discloses an example description file that includes references to three converted resources, i.e., Resource A, Resource B, and Resource C, as follows:

```
<item id="ID_1" path="Resource A" type="Flash"/>
<item id="ID_2" path="Resource B" type="PNG"/>
<item id="ID_3" path="Resource C" type="JPEG"/>
```

Ex. 1006 ¶ 48, Fig. 6.

A description file may include references to (1) "resources contained within the same UI content package" or (2) "resources in other content packages that are either in pre-installed" on a mobile device or available "on an external server computer." Ex. 1006 ¶ 46; *see id.* ¶ 50.

Package generator 214 creates UI content package 216 by processing (1) the description file from description editor 210 and (2) "the converted resource output from resource converter 206." Ex. 1006 ¶ 33; *see id.* ¶ 36, Fig. 4. UI content package 216 "comprises the appropriate converted

resources and the description file," i.e., "the UI skin for the target mobile device" and "images or data for the various UI elements, such as image files, movie files, and/or sound files." *Id.* ¶ 33.

A UI content package "contains information specific to the type of device, manufacturer of the device, operating system, application programs, and other relevant information regarding the mobile device." Ex. 1006 ¶ 28. A content-providing server may provide a UI content package, or "it may be UI content produced and provided by an alternate method." *Id.* ¶ 40; *see id.* ¶ 45.

Hariki's Figure 5 (reproduced below) depicts a mobile device with a resource application programming interface (API) for downloading resources for a UI content package:

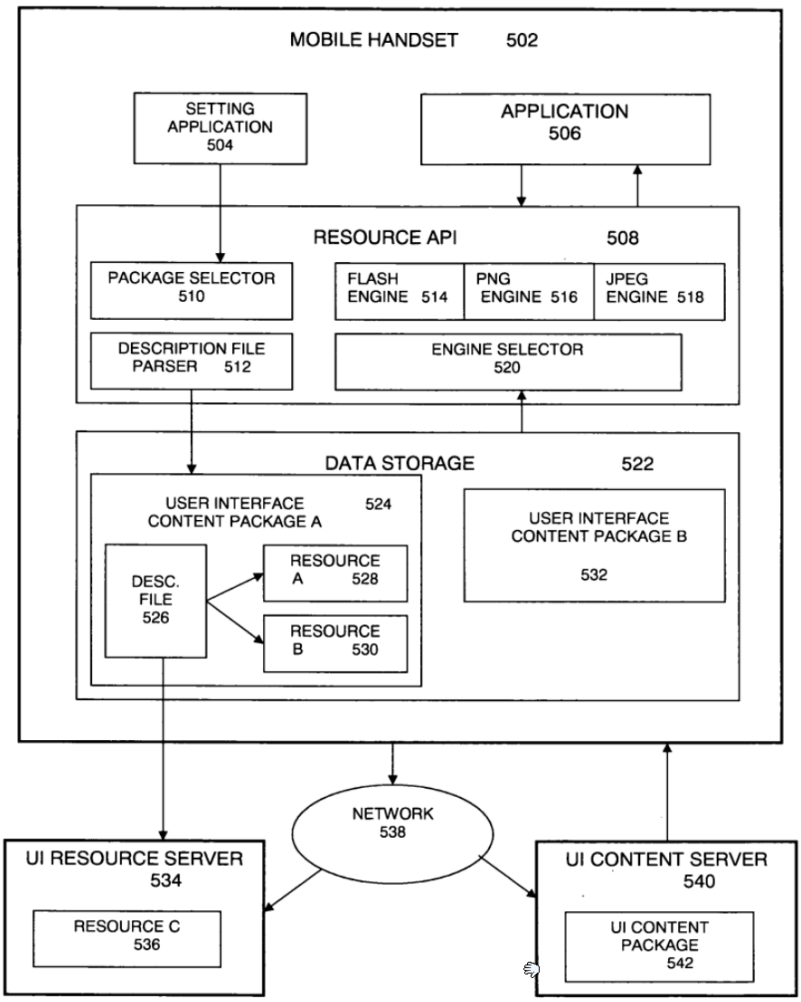

FIGURE 5

Figure 5 illustrates mobile handset 502 executing application program 506, e.g., "a software program or utility that alters the appearance or functionality of the mobile device" or "a program that, when executed, provides a service to the user." Ex. 1006 ¶¶ 15, 41, Fig. 5.

As Figure 5 shows, mobile handset 502 includes (1) setting application 504, (2) resource API 508 "functionally coupled" to application

program 506, and (3) data storage 522 containing two UI content packages, i.e., UI content package A 524 and UI content package B 532. Ex. 1006 ¶¶ 43–45, Fig. 5. Each UI content package contains description file 526 and converted resources 528 and 530. *Id.* ¶ 45, Fig. 5.

As Figure 5 also shows, resource API 508 includes "a number of functional components such as package selector 510, description file parser 512, an engine selector 520, and one or more engines, such as Flash engine 514, PNG (portable network graphics) engine 516, JPEG (joint photographic experts group) engine 518, and any other similar engines." Ex. 1006 ¶ 43, Fig. 5. The engines in resource API 508 process the converted resources in a UI content package using an appropriate format "depending upon the type of data or program elements in the resource." *Id.* ¶ 43.

A user of mobile handset 502 may select a UI content package for downloading to mobile handset 502. Ex. 1006 ¶ 44. After a user selects a UI content package for downloading, setting application 504 sets or changes "the UI content package data for the application program," i.e., "the UI package file path." *Id.* ¶¶ 44, 50, Fig. 7 (step 701). Application program 506 "requests a resource by specifying the resource ID (e.g., ID_1)" rather than "by file name or directory (storage location) path." *Id.* ¶¶ 41, 50, Fig. 7. Using the UI package file path from setting application 504 and the resource ID from application program 506, package selector 510 and description file parser 512 "locate the appropriate UI content package containing the referenced resource." *Id.* ¶ 50; *see id.* ¶¶ 44, 46.

To customize the user interface for application program 506, resource API 508 "reads the description file for the selected UI content package" and "retrieves each resource referenced by the description file selected for the UI content package" as located by package selector 510 and description file parser 512. Ex. 1006 ¶¶ 47, 50–51, Fig. 7. After resource API 508 "retrieves each resource referenced by the description file selected for the UI content package," engine selector 520 in resource API 508 "selects the proper engine" for processing each resource. *Id.* ¶¶ 47, 51; *see id.* ¶ 19, code (57). A selected engine converts the "applicable resource" to "a format or embodiment that is compatible with" application program 506. *Id.* ¶¶ 43, 47. "The application dictates the format of the resource in terms of parameters such as image size, color, position, and so on." *Id.* ¶ 47. After appropriate formatting, resource API 508 provides "all referenced resources to" application program 506 for display or sound output. *Id.* ¶ 51, Fig. 7; *see id.* ¶ 24.

Hence, application program 506 "can gain access to local or external resources by simply specifying a resource ID, rather than the location of a resource." Ex. 1006 ¶ 51, Fig. 7. "In this manner, changes can be made to resources through the use of different content packages or implementation in updateable UI resource servers, without requiring any change to the application program 506 itself." *Id.* ¶ 51; *see id.* ¶ 19, code (57).

2. OVERVIEW OF HARRIS (EXHIBIT 1007)

Harris is a U.S. patent application publication titled "System and Method for Delivering Content to Mobile Devices," filed on December 18, 2001, and published on January 30, 2003. Ex. 1007, codes (12), (22), (43), (54). Harris states that the invention "relates generally to the delivery of

content to mobile devices, and more particularly to the delivery of the same content to multiple mobile devices using different device protocols." *Id.* ¶ 2; *see id.* ¶ 14, code (57).

Harris describes various "content variables" that "content providers must take into account when delivering content to wireless devices." Ex. 1007 ¶¶ 3–5. "Content variables include differences in device languages, device display characteristics, device input methods, character encoding methods, and user preferences." *Id.* ¶ 3.

Harris identifies deficiencies in conventional methods for dealing with content variables when delivering content to wireless devices. Ex. 1007 ¶ 6. Among other things, "[m]aintaining multiple versions of a web site for different wireless devices is costly from both a time, human capital and monetary perspective." *Id.* Additionally, "HTML content from a standard web site is not readily adaptable for mobile devices," e.g., because translated HTML content may be "imperfect and difficult to navigate on a requesting mobile device (possibly producing gibberish or unintelligible text)." *Id.*

To address deficiencies in conventional methods for dealing with content variables when delivering content to wireless devices, Harris discloses a Mobile Content Framework (MCF) on a server that "facilitates abstracting content and behavior from the rendering of content on a requesting device." Ex. 1007 ¶ 7; *see id.* ¶ 14, code (57). The MCF provides "a platform that enables a content developer to distribute uniform content to multiple types of requesting mobile devices" without "providing different versions of the content." *Id.* at code (57); *see id.* ¶¶ 25, 35.

With the MCF, content is (1) "generated specifically for each device, both from a display standpoint and a content navigation standpoint," and

(2) "tailored to take into account the limited resources of certain devices such as mobile devices." Ex. 1007 ¶ 7; *see id.* ¶¶ 14–15, code (57). Further, the "interface may be dynamically personalized to the taste of the individual." *Id.* ¶ 7; *see id.* ¶ 24.

The MCF includes "a generic markup language" called Wireless Abstract XML (WAX). Ex. 1007 ¶ 7; *see id.* ¶¶ 8–9, 14, code (57). "Content is first translated into WAX from the original language of the content provider, or is created in WAX originally, and then converted into a device appropriate language for a requesting mobile device," such as HTML. *Id.* ¶ 7; *see id.* ¶¶ 14, 18, 24–25, 27, code (57). If content is translated into WAX, "the MCF ensures the best type and length of text is used, the best type and size of image is used, and that the content is well suited and customized for the device attributes." *Id.* ¶ 7.

Harris's Figure 1 (reproduced below) depicts an environment suitable for implementing the MCF:

Figure 1

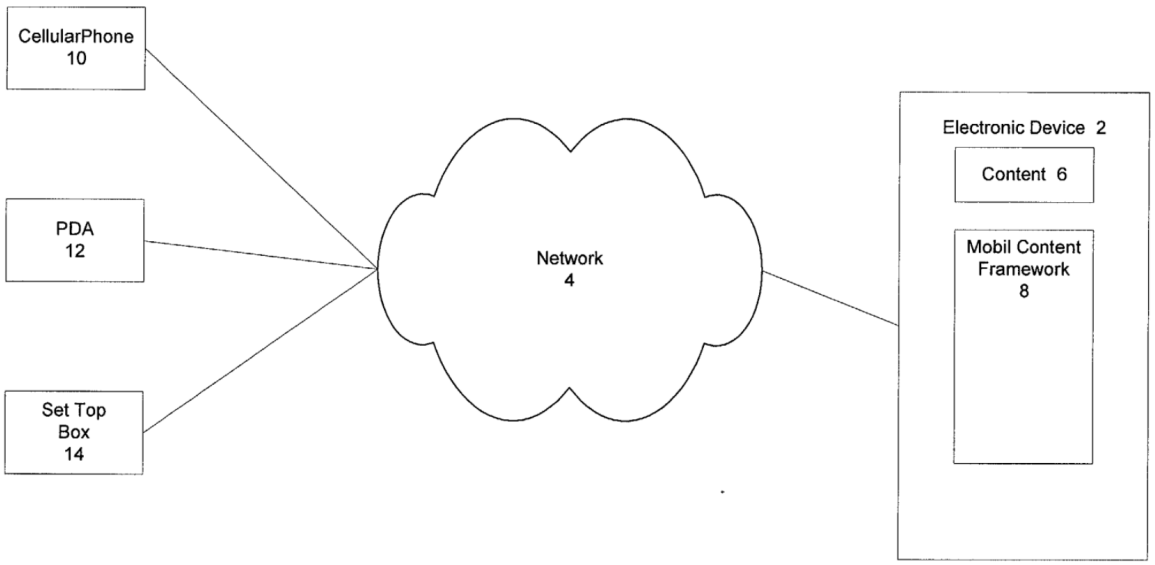

Figure 1 illustrates electronic device 2, e.g., a web server, with "content 6 and the MCF 8" connected through network 4 to "a plurality of mobile devices," e.g., "a cellular phone 10, a PDA 12 and set-top box 14," that may request content 6 from electronic device 2. Ex. 1007 ¶ 15, Fig. 1; *see id.* ¶¶ 23–24. Content 6 "may be content in written in WAX, a non-WAX wireless language format, or a non-wireless language format." *Id.* ¶ 15; *see id.* ¶ 25. For content written in a non-WAX format, the MCF 8 translates the content into WAX. *Id.* ¶ 15.

When delivering content to a requesting device, the MCF 8 translates the content from WAX into "a device-specific language," such as HTML, "using XML-based technologies." Ex. 1007 ¶¶ 18–19; *see id.* ¶¶ 8–9, 14, 16, 23–24, 27, code (57). "WAX is designed to overcome the challenges of graphics and user-input on small devices." *Id.* ¶ 16; *see id.* ¶ 17.

Harris's Figure 2 (reproduced below) depicts a block diagram of components in the MCF 8:

Figure 2

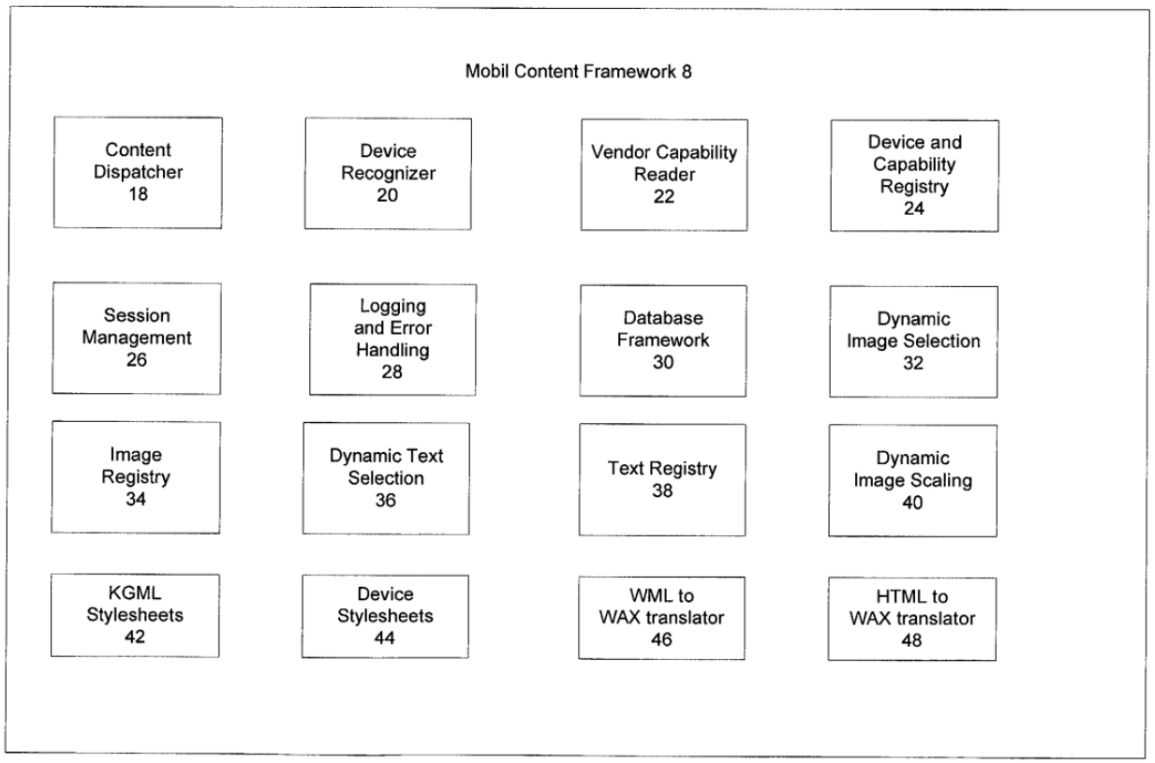

Figure 2 illustrates the MCF 8 including the following components: content dispatcher 18, device recognizer 20, vendor-capability reader 22, device-and-capability registry 24, session-management component 26, logging-and-error-handling component 28, database-framework component 30, dynamic image-selection component 32, image registry 34, dynamic text-selection component 36, text registry 38, dynamic image-scaling component 40, WAX-stylesheets component 42,[7] device-stylesheets component 44, WML-

[7] Although Figure 2 includes the identifier "KGML" for WAX-stylesheets component 42, Harris explains that "WAX is referred to as KGML" in a related provisional application. Ex. 1007 ¶ 7.

to-WAX translator 46,[8] and HTML-to-WAX translator 48. Ex. 1007 ¶¶ 20–22, Fig. 2.

Device-and-capability registry 24 includes the following:

(1) the specific features and capabilities of each mobile device, e.g., "screen size, browser version, etc.";

(2) "a set of rules used to determine which device is connecting to the MCF 8"; and

(3) application-specific information.

Ex. 1007 ¶¶ 21, 24. "Changes can be made" to registry 24 on "an application-specific basis." *Id.* ¶ 21. "Once the type of device is identified, attributes such as screen size, color depth, browser version and type, and translation rules become known." *Id.*

To "determine the best content to deliver to a requesting device at any given time," dynamic image-selection component 32 uses image registry 34, and dynamic text-selection component 36 uses text registry 38. Ex. 1007 ¶ 22; *see id.* ¶¶ 32–33. Dynamic image-scaling component 40 "scales and crops images to the right size and translates between image formats." *Id.* ¶ 22.

WAX-stylesheets component 42 "dictates the presentation of the WAX content." Ex. 1007 ¶ 22. Device-stylesheets component 44 "tailors the presentation of the content to the requesting device based on the attributes possessed by the requesting device." *Id.* WML-to-WAX translator 46 and HTML-to-WAX translator 48 "translate content in WML or HTML respectively into the WAX format." *Id.*

[8] The acronym "WML" stands for "Wireless Markup Language."

The MCF 8 "allows content to be authored in HTML, translated to WAX, and then transformed into content best suited for the requesting device," such as HTML. Ex. 1007 ¶ 35; *see id.* ¶¶ 7, 18, 27. "Both translations occur without changing the originating HTML source." *Id.* ¶ 35.

As an example of how the MCF 8 translates WAX elements differently for display based on "the attributes possessed by the requesting device," Harris explains that "[t]he <wax:button> element is displayed as a 'soft-key' for WAP [Wireless Application Protocol] devices, but as a 'link' for devices which understand only HTML." Ex. 1007 ¶¶ 29–30; *see id.* ¶ 22. As another example, Harris explains that the text "logo" in the <wax:img srcid="logo"> element is "used to index into a set of rules to determine the best image to display for the specific device." *Id.* ¶¶ 29–30.

3. INDEPENDENT CLAIM 1

(a) Preamble

Claim 1 recites "[a] method of generating content that is renderable by a wireless device." Ex. 1001, 20:40–41.

Petitioner contends that Hariki teaches claim 1's preamble because Hariki discloses server 102 that:

(1) "provides content data, application programs, diagnostic tools, program components, or any other content or executable objects to" mobile devices;

(2) "can execute[] a web server process to serve web pages," such as HTML files, over a network to mobile devices; and

(3) "can generate a customized user interface for a plurality of different makes and types of mobile devices."

Pet. 25 (alteration by Petitioner) (emphases omitted) (footnote omitted) (quoting Ex. 1006 ¶¶ 21, 24). According to Petitioner, Hariki's customized

user interface or "UI skin" allows "a user to customize the 'look and feel' or application program environment of a device by altering display and/or sound output aspects of the device." *Id.* at 25–26 (emphasis omitted) (quoting Ex. 1006 ¶ 24).

In particular, Petitioner contends that Hariki teaches "[a] method of generating content that is renderable" according to claim 1's preamble because Hariki discloses "a method of generating and downloading UI skins." Pet. 28 (emphasis omitted) (quoting Ex. 1006 ¶ 36). Further, Petitioner asserts that an ordinarily skilled artisan would have understood that Hariki's method generates "content that is renderable by a wireless device" according to claim 1's preamble because Hariki's server generates "executable content, such as a UI skin that alters the 'look and feel' of the display and/or sound of the mobile device and comprises audio content and display content." *Id.* at 27 (citing Ex. 1002 ¶ 111).

At this stage of the proceeding, Patent Owner makes no arguments specific to claim 1's preamble. *See, e.g.*, Prelim. Resp. 21–51. Nonetheless, the burden remains on Petitioner to demonstrate unpatentability. *See Dynamic Drinkware, LLC v. Nat'l Graphics, Inc.*, 800 F.3d 1375, 1378 (Fed. Cir. 2015).

Generally, a preamble does not limit a claim. *Allen Eng'g Corp. v. Bartell Indus., Inc.*, 299 F.3d 1336, 1346 (Fed. Cir. 2002). We need not decide whether claim 1's preamble limits the claim because, based on the current record and for the reasons advanced by Petitioner and supported by Dr. Bederson's testimony, Petitioner establishes sufficiently that Hariki teaches claim 1's preamble. *See* Pet. 25–29; Ex. 1002 ¶¶ 107–115.

(b) Limitation 1a

Claim 1 recites "transmitting, to said wireless device, an identification of a custom configuration of a plurality of rendering blocks of said wireless device." Ex. 1001, 20:42–44 (limitation 1a).

Petitioner contends that Hariki teaches limitation 1a for several related reasons. *See* Pet. 30–35. First, Petitioner asserts that Hariki discloses that server 102 "is operated by a content provider, and executes a user interface authoring tool 104 that generates a content package for each mobile device." Pet. 30 (quoting Ex. 1006 ¶ 25). According to Petitioner, user interface authoring tool 104 "can represent a program or suite of programs, or even hardware circuits, or any combination thereof embodying instructions executed by one or more processing units in server 102." *Id.* at 30–31 (emphases omitted) (quoting Ex. 1006 ¶ 27).

Second, Petitioner asserts that Hariki discloses that a UI skin permits configuration of, among other things, "backgrounds, title bars, buttons, [and] alert sounds" for display or sound output. Pet. 31 (emphasis omitted) (quoting Ex. 1006 ¶ 24) (citing Ex. 1006 ¶ 26). According to Petitioner, an ordinarily skilled artisan "would have understood that these backgrounds, title bars, buttons, and alert sounds comprise 'rendering blocks' within the context of the '715 patent." *Id.* (citing Ex. 1002 ¶ 119); *see id.* at 32 (citing Ex. 1002 ¶ 124). As support, Petitioner quotes the '715 patent's explanation that "rendering blocks" include, among other things, "static text for displaying text," "an image," a "check box/radio button," "sound for controlling audio," and "video to display a video." *Id.* at 31–32 (emphases omitted) (quoting Ex. 1001, 8:25–41).

Third, Petitioner asserts that Hariki discloses a UI content package comprising "screen parameter definitions (e.g., size, aspect ratio, icon definitions, and so on), images, video clips, music or other sound clips, ringtones, games, small applications (applets), utilities, diagnostic tools, or any other similar data or applications" called "UI content objects." Pet. 32 (emphases omitted) (quoting Ex. 1006 ¶ 27).

Fourth, Petitioner asserts that Hariki discloses user interface authoring tool 104 on server 102 that generates a UI content package from "common resource data" in common resource depot 202 in tool 104 using "resource profile information" in resource profiles 204 in tool 104. Pet. 33 (citing Ex. 1006 ¶ 29, Fig. 2). Petitioner also asserts that generating a UI content package includes the following:

(1) "description editor component 210 produces description files 212 based on the selected resource profile 204 and resource file" from common resource depot 202;

(2) "resource converter 206 converts each resource into a format corresponding to the resource profile" from resource profiles 204; and

(3) "description file 212 and the converted resource output from resource converter 206 are processed by a package generator component 214."

Id. at 33–34 (quoting Ex. 1006 ¶¶ 32–33). According to Petitioner, a UI content package "comprises the appropriate converted resources and the description file" that specifies the converted resources, the file path name, and the file type. *Id.* at 34 (citing Ex. 1002 ¶ 123; Ex. 1006 ¶¶ 33, 46).

Fifth, Petitioner asserts that Hariki discloses that "the converted resources in the UI content package are 'files, links to files, and/or data or program objects associated with the configurable aspect of the user interface

for each mobile device.'" Pet. 34 (emphasis omitted) (quoting Ex. 1006 ¶ 31).

Sixth, Petitioner asserts that an ordinarily skilled artisan would have understood that:

(1) "the converted resources in the UI content package configure the configurable aspects of the UI, by for example, changing a display image or color";

(2) the converted resources in the UI content package correspond to the claimed "custom configuration"; and

(3) the configurable aspects of the UI, such as configurable buttons and sounds, correspond to the claimed "plurality of rendering blocks."

Pet. 34 (citing Ex. 1002 ¶ 124; Ex. 1006 ¶ 24); *see id.* at 35 (citing Ex. 1002 ¶ 126).

Seventh, Petitioner asserts that Hariki discloses that "the description file 'may reference [converted] resources contained within the same UI content package, or it may reference [converted] resources in other content packages that are either [] pre-installed in the mobile handset or on an external server computer.'" Pet. 34–35 (alterations by Petitioner) (quoting Ex. 1006 ¶ 46).

Eighth, Petitioner asserts that an ordinarily skilled artisan would have understood that the description file in a UI content package identifies the converted resources in the UI content package and corresponds to the claimed "identification of a custom configuration." Pet. 35 (citing Ex. 1002 ¶¶ 125–126).

At this stage of the proceeding, Patent Owner makes no arguments specific to limitation 1a. *See, e.g.*, Prelim. Resp. 21–51.

Based on the current record and for the reasons advanced by Petitioner and supported by Dr. Bederson's testimony, Petitioner establishes sufficiently that Hariki teaches limitation 1a. *See* Pet. 30–35; Ex. 1002 ¶¶ 116–126.

(c) Limitation 1b

Claim 1 recites "wherein said custom configuration is associated with an application and configures said plurality of rendering blocks to render content in a manner customized to said application." Ex. 1001, 20:44–47 (limitation 1b).

(i) Petitioner's Contentions

Petitioner contends that Hariki teaches limitation 1b for several related reasons. *See* Pet. 35–37. First, for a "custom configuration" that "configures said plurality of rendering blocks," Petitioner asserts that Hariki discloses that the converted resources in a UI content package may relate to an application program as well as a mobile device and "alter the look and feel of aspects of the display and sound of the mobile device, such as backgrounds and sounds." *Id.* at 35; *see id.* at 25–30. Petitioner asserts that Hariki's UI skin allows "customization of the look and feel of the 'application program environment of a device.'" *Id.* at 35–36 (quoting Ex. 1006 ¶ 24).

Second, regarding the location of "an application" that is "associated with" the recited "custom configuration," Petitioner identifies "an application" on a mobile device and alternatively "an application" on a server. Pet. 36–37. Specifically, Petitioner asserts that Hariki teaches "an application" on a mobile device "associated with" the recited "custom configuration" because Hariki discloses "a web browser program to access

the web pages served by server computer 102 and any other available content provider or supplemental server." *Id.* at 36 (quoting Ex. 1006 ¶ 21) (citing Ex. 1002 ¶¶ 127, 129); *see id.* at 49–50 (citing Ex. 1002 ¶ 151; Ex. 1006 ¶ 41). Petitioner asserts that Hariki discloses that the converted resources in a UI content package "must be referenced in some way by the application and then retrieved and converted to an appropriate format for use by the application." *Id.* at 36 (emphasis omitted) (quoting Ex. 1006 ¶ 39). Therefore, according to Petitioner, an ordinarily skilled artisan would have understood that the converted resources in a UI content package "are associated with the web browser (i.e., 'an application')." *Id.* (citing Ex. 1002 ¶¶ 127, 129).

Alternatively, Petitioner asserts that Hariki teaches "an application" on a server "associated with" the recited "custom configuration" because Hariki discloses that (1) "the user interface authoring tool represents a suite of programs on the server" for generating "the custom UI for mobile devices accessing" a web server process and (2) "the server also provides content data such as HTML files through a web server process." Pet. 36–37. Petitioner asserts that an ordinarily skilled artisan would have recognized that "the user interface authoring tool and web server process were part of the same suite of programs" because (1) "they reside on the server together" and (2) "the authoring tool generated the custom UI for mobile devices accessing the web server process." *Id.* at 37 (citing Ex. 1002 ¶ 128). Therefore, according to Petitioner, an ordinarily skilled artisan would have understood that the converted resources in a UI content package "were associated also with the web server process that serves HTML files to the mobile device." *Id.* (citing Ex. 1002 ¶ 128).

(ii) Patent Owner's Contentions

Patent Owner disputes that Hariki teaches limitation 1b for several reasons. *See* Prelim. Resp. 21–34. First, Patent Owner asserts that Hariki discloses only device-level customization, e.g., because the converted resources in each UI content package are:

(1) "associated with, and render content in a manner customized to, a device, rather than an application as required by the claims";

(2) "equally accessible to all applications" on a device and "not specific for an application"; and

(3) "'common' UI package content in that they are for use by all 'resident application programs'" and "not associated with any one application."

Id. at 21–22, 27–29, 32 (emphases omitted) (quoting Ex. 1006 ¶ 39); *see id.* at 23–26, 30–32, 34. Patent Owner also asserts that Hariki does not disclose "the application-level customization found and claimed" in the '715 patent. *Id.* at 34.

As support, Patent Owner quotes Hariki's disclosure that UI customization "allow[s] users to personalize their phones or mobile devices with custom ringtones, background displays (wallpaper), menu configurations, and the like." Prelim. Resp. 22 (alteration by Patent Owner) (quoting Ex. 1006 ¶ 5). Patent Owner also quotes Hariki's disclosures that (1) the "UI content package contains the UI skin for the target mobile device" and (2) "the mobile device handset itself contains components to facilitate the downloading and conversion of resource files or data objects from common UI package content for use in resident application programs." *Id.* at 23–24, 28 (alteration omitted) (emphases omitted) (quoting Ex. 1006 ¶¶ 33, 39).

Regarding Petitioner's assertion that Hariki's UI skin allows "customization of the look and feel of the 'application program environment of a device,'" Patent Owner contends that the "environment" references "the entire program ecosystem, not any one application." Prelim. Resp. 26–27 (emphasis omitted) (citing Pet. 35–36).

Further, Patent Owner asserts that Hariki's resource profiles "are device specific rather than application specific." Prelim. Resp. 24 (emphases omitted). As support, Patent Owner quotes Hariki's disclosures that:

(1) "a resource profile is provided for device A" and "a resource profile is provided for device B" that correspond to "resource profiles for mobile devices 108 and 109" in Figure 1; and

(2) profile selector 205 "selects a resource profile 204 depending upon the device model."

Id. (emphases omitted) (quoting Ex. 1006 ¶¶ 30, 32).

Second, for "an application" that is "associated with" the recited "custom configuration," Patent Owner contends that neither a web browser on a mobile device nor a web server process on a server "is 'associated' with Hariki's alleged 'custom configuration' (UI skin)." Prelim. Resp. 28. Specifically, for a web browser on a mobile device, Patent Owner asserts that "Hariki does not teach that the browser ever accesses a UI content package." *Id.* at 29. Additionally, for a web server process on a server, Patent Owner asserts that "Petitioner's theory rests on the fallacious proposition" that an ordinarily skilled artisan would have recognized that "the user interface authoring tool and web server process were part of the same suite of programs" because (1) "they reside on the server together" and

(2) "the authoring tool generated the custom UI for mobile devices accessing the web server process." *Id.* (quoting Pet. 37).

Regarding (1) residing on the server together, Patent Owner asserts that "programs residing on the same computer do not have to be part of a suite, i.e., 'a set of computer programs designed to work together and usually sold as a single unit.'" Prelim. Resp. 29 (quoting Ex. 2004, 1); *see id.* at 53–54. According to Patent Owner, "Petitioner does not argue that the web server and the user interface authoring tool interact in any way." *Id.* at 29.

Regarding (2) the authoring tool generating the custom UI for mobile devices accessing the web server process, Patent Owner asserts that "Petitioner does not explain why, even if the authoring tool provided a 'UI content package' to a remote device" and "that remote device had a web browser that interfaced with the UI content package and displayed content from a web server running on the same server as the authoring tool," the converted resources in a UI content package "would be associated with this particular web server." Prelim. Resp. 30. According to Patent Owner, "downloading web content from a web server that happens to" reside on the same computer as the authoring tool does not associate a UI content package with "this web server any more than any other web server serving" the same content. *Id.*

Third, Patent Owner contends that the converted resources in a UI content package do not configure a "plurality of rendering blocks to render content in a manner customized to said application" according to limitation 1b. *See* Prelim. Resp. 30–33. Specifically, for a web browser on a mobile device, Patent Owner asserts that even if "the UI skin could

configure a wireless device's web browser, there would be nothing custom about the configuration" because the converted resources in each UI content package "are 'common' UI package content in that they are for use by all 'resident application programs' through the resource API." *Id.* at 31–32 (emphases omitted). Additionally, for a web server process on a server, Patent Owner asserts that "Hariki does not contemplate that the web server application is running or rendering anything on the wireless devices, so there is nothing of this web server application for the UI skin on the wireless device to even customize." *Id.* at 32 (emphases omitted).

Citing *Xerox Corp. v. Bytemark, Inc.*, IPR2022-00624, Paper 12 at 5 (PTAB Feb. 10, 2023) (Director review), Patent Owner asserts that Petitioner does not rely on "valid" evidence because Petitioner "simply puts forth its conclusion, solely citing its expert who merely parrots the Petition's cursory statement with no analysis." Prelim. Resp. 31 (citing Pet. 37; Ex. 1002 ¶ 129).

Fourth, Patent Owner asserts that Petitioner "fails to show how its proposed modified version of Hariki's web server in view of Harris" would meet limitation 1b that "has specific requirements directed to said 'application.'" Prelim. Resp. 39. According to Patent Owner, Petitioner (1) "never attempts to show that the modified combination teaches" limitation 1b and (2) "does not explain why the UI skin is associated with, and configures a plurality of rendering blocks to render content in a manner customized to, the modified web-server Petitioner envisions for other limitations." *Id.* at 33 (emphasis omitted).

(iii) Analysis

Based on the current record, Petitioner establishes sufficiently that Hariki teaches limitation 1b. *See* Pet. 35–36; Ex. 1002 ¶¶ 114–116, 127. Specifically, for the reasons explained below, Petitioner establishes sufficiently that Hariki teaches "an application" on a mobile device "associated with" the recited "custom configuration" according to limitation 1b. As for Petitioner's alternative assertion that Hariki teaches "an application" on a server "associated with" the recited "custom configuration," we disagree for the reasons explained below. *See* Pet. 36–37 (identifying "an application" on a mobile device and a server).

Initially, our analysis addresses whether Hariki discloses the required association between "an application" and the recited "custom configuration," i.e., whether Hariki discloses application-level customization according to limitation 1b. Then, our analysis addresses what "application" has the required association with the recited "custom configuration."

Based on the current record and for the reasons explained below, Hariki discloses application-level customization according to limitation 1b as well as device-level customization. Specifically, as Petitioner asserts, Hariki discloses that the converted resources in a UI content package may relate to an application program, as well as to a mobile device, and "alter the look and feel of aspects of the display and sound of the mobile device, such as backgrounds and sounds." *See* Ex. 1002 ¶¶ 114–116, 127; Ex. 1006 ¶¶ 19, 24, 28, 41, 44, 46–47, 50–51, code (57), Fig. 7; Pet. 35–36.

Hariki explains that a user of mobile handset 502 may select a UI content package for downloading to mobile handset 502. Ex. 1006 ¶ 44. After a user selects a UI content package for downloading, setting

application 504 sets or changes "the UI content package data for the application program," i.e., "the UI package file path." *Id.* ¶¶ 44, 50, Fig. 7 (step 701). By setting or changing "the UI content package data for the application program," setting application 504 associates the UI content package with the application program.

Hariki also explains that application program 506 is "functionally coupled to resource API 508" including package selector 510 and description file parser 512. Ex. 1006 ¶ 43. Application program 506 "requests a resource by specifying the resource ID (e.g., ID_1)" rather than "by file name or directory (storage location) path." *Id.* ¶¶ 41, 50, Fig. 7. Using the UI package file path from setting application 504 and the resource ID from application program 506, package selector 510 and description file parser 512 "locate the appropriate UI content package containing the referenced resource." *Id.* ¶ 50; *see id.* ¶¶ 44, 46. Hence, resource API 508 determines where to obtain the converted resources in the UI content package associated with the application program.

To customize the user interface for application program 506, resource API 508 "reads the description file for the selected UI content package" and "retrieves each resource referenced by the description file selected for the UI content package" as located by package selector 510 and description file parser 512. Ex. 1006 ¶¶ 47, 50–51, Fig. 7. Hence, resource API 508 retrieves the converted resources in the UI content package associated with the application program.

After resource API 508 "retrieves each resource referenced by the description file selected for the UI content package," engine selector 520 in resource API 508 "selects the proper engine" for processing each resource.

Ex. 1006 ¶¶ 47, 51; *see id.* ¶ 19, code (57). A selected engine converts the "applicable resource" to "a format or embodiment that is compatible with" application program 506. *Id.* ¶¶ 43, 47. After appropriate formatting, resource API 508 provides "all referenced resources to" application program 506 for display or sound output. *Id.* ¶ 51, Fig. 7; *see id.* ¶ 24. Hence, resource API 508 uses the converted resources in the UI content package associated with the application program to customize the application program.

Thus, as Petitioner asserts, the converted resources in a UI content package are "referenced in some way by the application and then retrieved and converted to an appropriate format for use by the application." *See* Ex. 1002 ¶ 127; Ex. 1006 ¶ 39; Pet. 36.

Patent Owner's contentions rest on the incorrect premise that Hariki discloses only device-level customization, i.e., that the converted resources in each UI content package are "associated with, and render content in a manner customized to, a device, rather than an application as required by the claims." *See, e.g.*, Prelim. Resp. 21–34. For the reasons discussed above, however, Hariki discloses application-level customization as well as device-level customization.

Consistent with Petitioner's analysis, Hariki identifies a need for application-level customization as well as device-level customization as follows: "What is further needed is a mobile device configuration system that **allows modification of** mobile device user interfaces or **application programs** without modification of the application programs themselves." Ex. 1006 ¶ 9; *see id.* ¶ 19, code (57). Hariki later explains that a mobile

device may use downloaded or pre-installed UI content packages to "change the UI skin of the application 506" on the mobile device. *Id.* ¶ 42.

Additionally, Hariki states that "application writers" as well as "device manufacturers" may develop customized user interfaces. Ex. 1006 ¶ 24. Patent Owner does not explain why "application writers" would develop customized user interfaces that provide only device-level customization rather than customizations for their respective applications. *See, e.g.*, Prelim. Resp. 21–34. Patent Owner also does not explain how a system providing only device-level customization would work with different application programs having different user-interface elements for different features. *See, e.g.*, *id.* at 21–34. For instance, a web browser has different user-interface elements than a word-processing program, and a word-processing program has different user-interface elements than a spreadsheet program.

Further, for the reasons discussed above, resource API 508 uses the converted resources in a UI content package associated with an application program to customize the application program, i.e., by retrieving the converted resources, properly formatting the retrieved resources, and providing the properly formatted resources to the application program. Ex. 1006 ¶¶ 19, 41–42, 44, 46–47, 50–51, code (57), Fig. 7; *see* Ex. 1002 ¶¶ 147, 151. The converted resources in the UI content package permit configuration of, among other things, "backgrounds, title bars, buttons, [and] alert sounds" for display or sound output. Ex. 1006 ¶ 24; *see id.* ¶¶ 19, 26, code (57); Ex. 1002 ¶¶ 69, 118.

Based on the current record, we agree with Petitioner that an ordinarily skilled artisan "would have understood that these backgrounds,

title bars, buttons, and alert sounds comprise 'rendering blocks' within the context of the '715 patent." *See* Pet. 31–32; Ex. 1002 ¶¶ 119, 124. Hence, based on the current record, we disagree with Patent Owner that the converted resources in a UI content package do not configure a "plurality of rendering blocks to render content in a manner customized to said application" according to limitation 1b. *See* Prelim. Resp. 30–33; Ex. 1002 ¶ 127.

Also, based on the current record, we agree with Petitioner that Hariki teaches "an application" on a mobile device "associated with" the recited "custom configuration" according to limitation 1b. *See* Pet. 35–36. Specifically, for "an application" on a mobile device "associated with" the recited "custom configuration," Hariki discloses that a mobile device may run "a web browser program to access the web pages served by" server 102, server 106, or "any other available content provider or supplemental server." Ex. 1006 ¶ 21; *see* Ex. 1002 ¶ 127. Further, for the reasons discussed above, resource API 508 uses the converted resources in a UI content package associated with an application program to customize the application program, e.g., to customize the web browser program. Ex. 1006 ¶¶ 19, 41–42, 44, 46–47, 50–51, code (57), Fig. 7; *see* Ex. 1002 ¶¶ 127, 147, 151.

For instance, a Samsung mobile phone may have two web browsers, e.g., a Google browser and a Microsoft browser. If so, a first UI content package may customize the Google browser in certain ways, and a second UI content package may customize the Microsoft browser in different ways, e.g., because the different browsers have different features, backgrounds, and layouts. *See* Ex. 1002 ¶ 127. Further, even for a single browser on a mobile phone, a first UI content package may customize the browser in

certain ways, e.g., to have dog-themed buttons, and a second UI content package may customize the browser in different ways, e.g., to have cat-themed buttons. *See, e.g.*, Ex. 1006 ¶ 42.

Hence, based on the current record, Petitioner establishes sufficiently that Hariki teaches "an application" on a mobile device, i.e., a web browser program, "associated with" the recited "custom configuration" according to limitation 1b. *See* Pet. 35–36; Ex. 1002 ¶ 127.

Based on the current record, however, we disagree with Petitioner's alternative assertion that Hariki teaches "an application" on a server "associated with" the recited "custom configuration" according to limitation 1b. *See* Pet. 36–37. Petitioner's alternative assertion rests on Hariki's disclosures that (1) "the user interface authoring tool represents a suite of programs on the server" for generating "the custom UI for mobile devices accessing" a web server process and (2) "the server also provides content data such as HTML files through a web server process." *Id.* at 36–37. But Hariki explains that the user interface authoring tool "can represent a program or suite of programs, or even hardware circuits, or any combination thereof embodying instructions executed by one or more processing units in server 102." Ex. 1006 ¶ 27. Thus, one or more programs (or even hardware circuits) may perform the functions performed by profile selector 205, resource converter 206, screen previewer 208, description editor 210, description file 212, and package generator 214 in the user interface authoring tool. *See id.* ¶¶ 12, 28–33, Fig. 2.

Based on the current record, however, Hariki does not indicate that the user interface authoring tool is "associated with" the web server process. *See, e.g.*, Ex. 1006 ¶¶ 21, 25–33, 36–40, Figs. 1–2. As Patent Owner asserts,

"programs residing on the same computer do not have to be part of a suite, i.e., 'a set of computer programs designed to work together and usually sold as a single unit.'" *See* Prelim. Resp. 29; Ex. 2004, 1.

For instance, a Samsung mobile phone may have a Google browser, and an Apple mobile phone may have a Microsoft browser. If so, the Google browser as customized by a first UI content package may request a particular web page, and the Microsoft browser as customized by a second UI content package may request the same web page. Based on the current record, the server executing the web server process responds in the same way to each browser's request without altering the web server process in a manner related to the first or second UI content package, i.e., by transmitting the HTML file corresponding to the requested web page to the requesting browser. *See, e.g.*, Ex. 1006 ¶ 21. As Patent Owner asserts, "downloading web content from a web server that happens to" reside on the same computer as the authoring tool does not associate a UI content package with "this web server any more than any other web server serving" the same content. *See* Prelim. Resp. 30.

Also, Petitioner does not specify a purpose for customizing the "look and feel" of a web server process when that process operates behind the scenes to respond to a web browser's request for a web page. *See, e.g.*, Pet. 35–37; Ex. 1002 ¶¶ 59–61, 64.

Thus, based on the current record, Petitioner fails to establish sufficiently its alternative position that Hariki teaches "an application" on a server, i.e., a web server process, "associated with" the recited "custom configuration" according to limitation 1b. *See* Pet. 36–37; Ex. 1002 ¶¶ 128–129.

As for Patent Owner's assertion that Petitioner does not rely on "valid" evidence in view of *Xerox Corp. v. Bytemark, Inc.*, IPR2022-00624, Paper 12 at 5 (PTAB Feb. 10, 2023) (Director review), we disagree. *See* Prelim. Resp. 31. Verbatim duplication between a brief and a declaration does not require giving the declarant's testimony "little or no weight" under *Xerox*. *See Unified Patents, LLC v. Togail Techs., Ltd.*, IPR2023-00338, Paper 7 at 11 (PTAB Aug. 18, 2023) (explaining that *Xerox* does not require according declaration testimony "little or no weight simply because it is verbatim to" statements in a petition); *Hum Indus. Tech., Inc. v. Amsted Rail Co.*, IPR2023-00540, Paper 10 at 37 (PTAB Aug. 11, 2023) (explaining that "[i]f declaration testimony is supported sufficiently and, in turn, supports contentions in the Petition, we do not give it little to no weight simply because it is repeated in the Petition"); *Epic Games, Inc. v. IngenioShare, LLC*, IPR2022-00202, Paper 29 at 9 (PTAB May 19, 2023) (declining to disregard a declarant's testimony that mirrored a brief).

In *Xerox*, the Board considered an expert's declaration that (1) repeated verbatim a conclusory statement in a brief and (2) did not "cite to any additional supporting evidence or provide any technical reasoning to support [the] statement." *Xerox Corp. v. Bytemark, Inc.*, IPR2022-00624, Paper 9 at 15 (PTAB Aug. 24, 2022) (precedential); *see id.* at 16 (noting that the declaration contained another "restatement of the assertion being supported, without any supporting evidence or technical reasoning"). Here, in contrast to *Xerox*, Petitioner and Dr. Bederson cite supporting evidence and provide technical reasoning regarding how Hariki teaches limitation 1b. *See* Pet. 25–29, 35–36; Ex. 1002 ¶¶ 109–115, 127.

Patent Owner's criticism that Petitioner "fails to show how its proposed modified version of Hariki's web server in view of Harris" would meet limitation 1b concerns Petitioner's contentions that "an application" on a server is "associated with" the recited "custom configuration," not Petitioner's contentions that "an application" on a mobile device is "associated with" the recited "custom configuration." *See* Pet. 35–37; Prelim. Resp. 33, 39.

(d) Limitation 1c

Claim 1 recites "transmitting, to said wireless device, compiled content comprising (i) first compiled content specific to a first page of said application and (ii) second compiled content specific to a second page of said application." Ex. 1001, 20:48–51 (limitation 1c).

(i) Petitioner's Contentions

Petitioner contends that the combined disclosures in Hariki and Harris teach limitation 1c. *See* Pet. 37–43. Specifically, Petitioner asserts that Hariki discloses that server 102:

(1) "provides content data, application programs, diagnostic tools, program components, or any other content or executable objects" to mobile devices; and

(2) "can be a World-Wide Web (WWW) server that stores data in the form of web pages and transmits these pages as Hypertext Markup Language (HTML) files over the Internet 110" to mobile devices.

Id. at 38 (quoting Ex. 1006 ¶ 21).

Further, Petitioner asserts that an ordinarily skilled artisan would have understood that an HTML file contains a "compilation of tags" aggregated into the HTML file that include "low level commands to render content" on a device. Pet. 38 (citing Ex. 1002 ¶ 130). Petitioner also asserts that an

ordinarily skilled artisan would have understood that a client accessing a server may receive "multiple" HTML pages (corresponding to "a first page" and "a second page") from the server as well as embedded images referenced in the HTML pages. *Id.* at 39 (citing Ex. 1002 ¶ 131).

Therefore, according to Petitioner, an ordinarily skilled artisan "would have understood Hariki to disclose" that:

(1) a "server transmits embedded images and multiple (corresponding to the claimed 'first' and 'second') HTML files (corresponding to the claimed 'compiled content')"; and

(2) the "HTML pages sent by a server" are "specific to the application (e.g., a web browser) executed on the mobile device because that browser application requested the content in the first place."

Pet. 39 (emphasis omitted) (citing Ex. 1002 ¶ 131).

Additionally, "to the extent that [Patent Owner] contends that Hariki does not disclose 'compiled content'" according to limitation 1c, Petitioner asserts that Harris discloses "a detailed process of sending HTML files to a client" where "the HTML files are tailored to the particular mobile device." Pet. 40 (emphasis omitted) (citing Ex. 1002 ¶ 132).

In particular, Petitioner contends that Harris discloses:

(1) "a wireless device template independent of mobile device type is generated in the WAX (XML) language and subsequently translated to a device specific language";

(2) the "elements (or tags) in the WAX file are translated" differently for display depending on the requesting device;

(3) the "customized content is then returned to" the requesting device; and

(4) the customized content is in "a language the requesting device can understand," such as "WML, HDML, HTML, compact-HTML and Palm webClippings."[9]

Pet. 39–40, 42 (quoting Ex. 1007 ¶¶ 3, 24); *see id.* at 41–42. Regarding the "elements (or tags) in the WAX file" translated differently for display depending on the requesting device, Petitioner quotes Harris's example that "[t]he <wax:button> element is displayed as a 'soft-key' for WAP [Wireless Application Protocol] devices, but as a 'link' for devices which understand only HTML." *Id.* at 42 (alteration by Petitioner) (quoting Ex. 1007 ¶ 30).

Petitioner also asserts that Harris discloses "serving multiple pages (e.g., HTML files) to the mobile client" because Harris explains that (1) "the mobile device will make 'page requests'" and (2) "caching is done for multiple pages." Pet. 42–43 (emphasis omitted) (quoting Ex. 1007 ¶ 27).

Further, Petitioner asserts that an ordinarily skilled artisan would have understood that Harris discloses "sending basic commands to render display items," e.g., a button or link, that are "specific to the application being executed on the mobile device (corresponding to the claimed 'compiled content')." Pet. 42 (citing Ex. 1002 ¶¶ 136–137). Petitioner also asserts that an ordinarily skilled artisan would have understood that the HTML files are (1) "specific to the web server application on the server because that application is generating the HTML files in the first instance" and (2) "specific to the pages served by the web server or consumed by the web browser (i.e., 'said application')." *Id.* at 42–43 (citing Ex. 1002 ¶¶ 136–137).

[9] The acronym "WML" stands for "Wireless Markup Language," and the acronym "HDML" stands for "Handheld Device Markup Language."

(ii) Patent Owner's Contentions

Patent Owner disputes that the combined disclosures in Hariki and Harris teach limitation 1c. *See* Prelim. Resp. 35–39. Specifically, for a web browser on a mobile device, Patent Owner asserts that limitation 1c "requires that the identified compiled content, the HTML files, must include content specific to two pages of a web browser application." *Id.* at 35 (emphasis omitted). Patent Owner then contends that HTML files received by a mobile device "do not direct a device to display a web browser application." *Id.* at 36. According to Patent Owner, "providing a device with content in the only language the device understands does not make the content specific to any pages of" a web browser, "otherwise all pages everywhere, whether run through a WAX translation or not, that are written in the device's supported language would be 'specific to' the browser." *Id.* at 37.

Additionally, for a web server process on a server, Patent Owner asserts that limitation 1c "requires that the identified compiled content, the HTML files, must include content specific to [two] pages of that web server application." Prelim. Resp. 37 (emphasis omitted). Patent Owner then contends that "Hariki does not disclose transmitting a web server application to the wireless devices in any format, instead noting that the web server process resides on 'server 102.'" *Id.* (quoting Ex. 1006 ¶ 21).

Further, Patent Owner responds to Petitioner's assertion that the HTML files are "specific to the web server application on the server because that application is generating the HTML files in the first instance" by arguing that "the information and functionality conveyed by the HTML is not particular to any device" because "Harris specifies that the content can

come from any content creator in any 'original language' and from any 'content location.'" Prelim. Resp. 37 (emphasis omitted) (quoting Ex. 1007 ¶¶ 7–8). According to Patent Owner, "Harris's HTML, the alleged 'compiled content,' is" (1) "unbounded," (2) "arbitrary information," (3) "not particular to a web server," and (4) "not application-specific content." *Id.* at 38. Also, Patent Owner asserts that "serving and consuming pages does not make the content served specific to pages of the serving and consuming applications." *Id.* (emphasis omitted).

(iii) Analysis

Based on the current record, Petitioner establishes sufficiently that the combined disclosures in Hariki and Harris teach limitation 1c. *See* Pet. 37–43; Ex. 1002 ¶¶ 130–132, 135–137. Specifically, Hariki discloses that:

(1) server 102 may execute "a web server process to serve web pages over network 110" by transmitting HTML files; and

(2) mobile devices 108 and 109 may run "a web browser program to access the web pages served by" server 102.

Ex. 1006 ¶ 21; *see* Ex. 1002 ¶¶ 69, 130.

As Petitioner asserts, an ordinarily skilled artisan would have understood that an HTML file contains a "compilation of tags" aggregated into the HTML file that include "low level commands to render content" on a device. Ex. 1002 ¶ 130; *see id.* ¶¶ 62, 92; Pet. 38. An HTML file corresponds to "compiled content" according to limitation 1c. Ex. 1002 ¶¶ 131, 140, 151.

Regarding "transmitting" according to limitation 1c, when a web browser on a mobile device requests a first web page, Hariki's server responds by transmitting a first HTML file corresponding to "first compiled

content specific to a first page of said application." *See* Ex. 1002 ¶ 131; Ex. 1006 ¶ 21. And when the web browser on the mobile device requests a second web page, Hariki's server responds by transmitting a second HTML file corresponding to "second compiled content specific to a second page of said application." *See* Ex. 1002 ¶ 131; Ex. 1006 ¶ 21. An HTML file transmitted by a server to a web browser on a requesting device is "specific to" a "page" of the web browser because the web browser specified that particular content for display by the web browser, e.g., by specifying a Uniform Resource Locator (URL) in a request to the server. *See* Ex. 1002 ¶¶ 61, 64, 131; Ex. 1018, 6–7.

Additionally, as Petitioner asserts, Harris discloses "a detailed process of sending HTML files to a client" where "the HTML files are tailored to the particular mobile device." *See* Ex. 1002 ¶¶ 70–74, 132; Ex. 1007 ¶¶ 7, 14–16, 18–19, 21–22, 24, 35, code (57), Figs. 1–2; Pet. 40. Specifically, Harris discloses a Mobile Content Framework (MCF) on a server that "facilitates abstracting content and behavior from the rendering of content on a requesting device." Ex. 1007 ¶ 7; *see id.* ¶ 14, code (57); Ex. 1002 ¶¶ 71–73.

With the MCF, content is (1) "generated specifically for each device, both from a display standpoint and a content navigation standpoint," and (2) "tailored to take into account the limited resources of certain devices such as mobile devices." Ex. 1007 ¶ 7; *see id.* ¶¶ 14–15, code (57); Ex. 1002 ¶¶ 71, 132. Content tailoring occurs based on "the attributes possessed by the requesting device," including "browser version and type." Ex. 1007 ¶¶ 21–22, 24; *see id.* ¶¶ 32–33; Ex. 1002 ¶ 163.

When delivering content to a requesting device, the MCF translates the content from WAX into "a device-specific language," such as HTML. Ex. 1007 ¶¶ 18–19; *see id.* ¶¶ 8–9, 14, 16, 24, 27, code (57); Ex. 1002 ¶¶ 74, 132, 136. The MCF "allows content to be authored in HTML, translated to WAX, and then transformed into content best suited for the requesting device," such as HTML. Ex. 1007 ¶ 35; *see id.* ¶¶ 7, 18, 27.

An HTML file corresponds to "compiled content" according to limitation 1c. Ex. 1002 ¶¶ 131, 140, 151. Further, as Petitioner asserts, an ordinarily skilled artisan would have understood that Harris discloses "sending basic commands to render display items," e.g., a button or link, that are "specific to the application being executed on the mobile device (corresponding to the claimed 'compiled content')." *See* Ex. 1002 ¶¶ 136–137; Ex. 1007 ¶¶ 21–22, 24; Pet. 42.

As for Patent Owner's argument that "the information and functionality conveyed by the HTML is not particular to any device" because "Harris specifies that the content can come from any content creator in any 'original language' and from any 'content location,'" we disagree based on the current record. *See* Prelim. Resp. 37. Regardless of who created the content, its initial language, and its initial location, Harris's MCF employs electronic device 2, e.g., a web server, to store the content in WAX format. Ex. 1007 ¶ 15, Fig. 1; *see id.* ¶¶ 23–25; Ex. 1002 ¶¶ 72–73. When delivering content to a requesting device, the MCF translates the content from WAX into "a device-specific language," such as HTML. Ex. 1007 ¶¶ 18–19; *see id.* ¶¶ 8–9, 14, 16, 24, 27, code (57); Ex. 1002 ¶¶ 74, 132, 136. As discussed above, an HTML file transmitted by a server to a web browser on a requesting device is "specific to" a "page" of the web browser because

the web browser specified that particular content for display by the web browser, e.g., by specifying a URL in a request to the server. *See* Ex. 1002 ¶¶ 61, 64, 131; Ex. 1018, 6–7.

Further, Patent Owner's argument that "providing a device with content in the only language the device understands does not make the content specific to any pages of" a web browser disregards how a web browser interacts with a server to obtain a web page for display by the web browser, e.g., by specifying particular content in a request to the server. *See* Ex. 1002 ¶¶ 59–61, 64, 131; Prelim. Resp. 37.

As for Patent Owner's assertion that limitation 1c "requires that the identified compiled content, the HTML files, must include content specific to two pages of a web browser application," Harris's MCF may respond to multiple "page requests," e.g., requests from a web browser on a requesting device for multiple web pages. Ex. 1007 ¶ 27; *see* Ex. 1002 ¶ 137; Prelim. Resp. 35.

Insofar as Patent Owner asserts that the two pages required by limitation 1c must include "compiled content" of the application itself, i.e., computer instructions in a programming language such as C++ or Python, the '715 patent's specification refutes the assertion. *See* Prelim. Resp. 35–39. The specification explains that a server may provide a wireless device with a "compiled page description" including a "series of basic commands" forming "a single unified page to be rendered by the wireless device." Ex. 1001, 15:54–57, 15:63–65, 18:11–14, Fig. 4; *see id.* at 6:9–11, 6:24–29; Ex. 1002 ¶ 142.

The "basic commands are discrete low level rendering commands" for the wireless device and specify "page layout information" for "display and

audio rendering" at the wireless device. Ex. 1001, 6:29–31, 13:20–23; *see id.* at 2:44–47, 3:61–63, 16:61–62, 17:65–18:2, 18:11–12, 19:61–62; Ex. 1002 ¶ 95. For example, the basic commands may specify "the horizontal and vertical coordinates, the width, the height, the type of component to be displayed (e.g., text, image, video, audio and the like)," and "the unique identification of the rendering block to be used to render the component." Ex. 1001, 13:24–32; *see* Ex. 1002 ¶ 141.

Additionally, the '715 patent's specification equates "downloaded compiled content" to the content needed to produce a "displayed page" at a wireless device. *See* Ex. 1001, 13:36–40. In particular, the specification explains that a client on a wireless device may cache "downloaded compiled content such that it can be retrieved at a later time." *Id.* at 13:36–38. The specification similarly explains that a client on a wireless device may cache a "displayed page such that the client can browse back without having to download the page again" when "surfing the Internet." *Id.* at 13:38–40.

Further, "surfing the Internet" according to the '715 patent may involve viewing HTML pages that describe "the content in terms of how the content is displayed" just like a "compiled page description" or "compiled content" as disclosed and claimed in the patent. *See* Ex. 1001, 6:29–31, 13:20–32, 15:54–57, 15:63–65, 18:11–14, 20:40–62, 21:19–43, 22:19–43, Fig. 4; Ex. 1002 ¶¶ 62, 92, 130; Ex. 2005, 1:14–15. Consistent with this, the patent explains that "[d]uring the user navigation, the client may keep the path history of the user such that the user can press the 'back' key to go to the previous screen without requesting for the page to be downloaded again." Ex. 1001, 14:45–48.

(e) Limitation 1d

Claim 1 recites "wherein said compiled content is generated in part from execution of said application." Ex. 1001, 20:52–53 (limitation 1d).

(i) Petitioner's Contentions

Petitioner contends that the combined disclosures in Hariki and Harris teach limitation 1d. *See* Pet. 43–44. Specifically, Petitioner asserts that Hariki discloses that a mobile device "executes" a web browser to request HTML files from a server and the server "executes" a web server process to provide the requested HTML files to the requesting mobile device. *Id.* at 43 (citing Ex. 1006 ¶¶ 21, 38). Petitioner also asserts that an ordinarily skilled artisan "would have readily understood that receiving the subsequent HTML files was due at least in part to executing the web server process and/or the web browser because execution of the applications is required to operate the server-browser system." *Id.* (citing Ex. 1002 ¶ 138); *see id.* at 44 (citing Ex. 1002 ¶ 140).

Additionally, Petitioner asserts that Harris discloses that:

(1) "the generation of the HTML page begins when the 'web server accepts a connection and an HTTP request from a mobile device and the servlet engine directs the request to the appropriate page or servlet destined to generate WAX"; and

(2) the Mobile Content Framework (MCF) on the server "translates the WAX into a device-specific markup language (WML, HTML, etc.)."

Pet. 43–44 (quoting Ex. 1007 ¶¶ 24, 27). Petitioner also asserts that an ordinarily skilled artisan "would have understood, that just as in Hariki, the web server and mobile device are each executing applications that cause the

generation of the HTML page (i.e., 'compiled content')." *Id.* at 44 (emphasis omitted) (citing Ex. 1002 ¶ 140).

(ii) Patent Owner's Contentions

Patent Owner disputes that the combined disclosures in Hariki and Harris teach limitation 1d. *See* Prelim. Resp. 39–40. Specifically, for a web browser on a mobile device, Patent Owner asserts that the web browser in Hariki "does not generate the Petitioner-identified compiled content, the HTML files from the server." *Id.* at 39. According to Patent Owner, "the HTML files could not have been 'generated' by the web browsers on the wireless devices, as the HTML files are completely generated outside the wireless devices and before the web browser even receives the HTML." *Id.* at 39–40 (emphasis omitted). Patent Owner also asserts that Harris's MCF "generates the HTML" regardless of "what prompted the MCF to action," such as a web browser's HTTP request. *Id.* at 40.

For a web server process on a server, Patent Owner does not address Petitioner's position that a mobile device's receiving "HTML files was due at least in part to executing the web server process" required to "operate the server-browser system." Prelim. Resp. 39–40; *see* Pet. 43–44.

(iii) Analysis

Based on the current record, Petitioner establishes sufficiently that the combined disclosures in Hariki and Harris teach limitation 1d. *See* Pet. 43–44; Ex. 1002 ¶¶ 138–140. As Petitioner asserts, Hariki discloses that a mobile device "executes" a web browser to request HTML files from a server and the server "executes" a web server process to provide the requested HTML files to the requesting mobile device. Ex. 1006 ¶¶ 21, 38; *see* Pet. 43. The web server process generates the requested HTML files "in

part from execution of" the web browser that requested the generated HTML files. Ex. 1002 ¶ 138. In other words, the compiled content is generated upon execution of the web browser to make the HTML request.

Additionally, Harris discloses that when delivering content to a requesting device, the MCF translates the content from WAX into "a device-specific language," such as HTML. Ex. 1007 ¶¶ 18–19; *see id.* ¶¶ 8–9, 14, 16, 24, 27, code (57); Ex. 1002 ¶¶ 74, 132, 136. The translated content "is generated in part from execution of" a web browser on the requesting device because a request from the web browser caused the MCF to generate the translation into the "device-specific language" for the requesting device. Ex. 1002 ¶¶ 139–140; Ex. 1007 ¶ 24.

Patent Owner's assertion that the web browser in Hariki "does not generate the Petitioner-identified compiled content, the HTML files from the server" disregards the "in part from execution" language in limitation 1d. *See* Prelim. Resp. 39. Patent Owner's assertion that Harris's MCF "generates the HTML" regardless of "what prompted the MCF to action" disregards Harris's disclosure that the MCF delivers customized content upon request by a mobile device and "specifically for each device" in "a language the requesting device can understand," such as "WML, HDML, HTML, compact-HTML and Palm webClippings." Ex. 1007 ¶¶ 3, 7, 24; *see* Ex. 1002 ¶¶ 71, 132, 136; Prelim. Resp. 40. Thus, the content generation is not solely and independently accomplished by the MCF, but also requires the execution of the web browser to identify particular content for display by the web browser on the mobile device.

Patent Owner admits that the MCF "performs a 'conversion of WAX into the languages used by the requesting mobile devices such as WML,

HDML and HTML.'" Prelim. Resp. 41–42 (quoting Ex. 1007 ¶ 7). Hence, the MCF generates an HTML file from WAX, rather than a WML file or an HDML file, for a requesting device "in part from execution of" a web browser on the requesting device, e.g., due to an HTTP request from the web browser for the generated content.

(f) Limitation 1e

Claim 1 recites "wherein said compiled content comprises render commands expressed in a syntax that is generic to said wireless device." Ex. 1001, 20:53–55 (limitation 1e).

(i) Petitioner's Contentions

Petitioner contends that the combined disclosures in Hariki and Harris teach limitation 1e. *See* Pet. 44–47. Specifically, Petitioner asserts that "HTML is a standardized language that has the same syntax no matter what device" receives an HTML file, and thus generic to a mobile device. *Id.* at 44 (citing Ex. 1002 ¶ 145). Petitioner also asserts that Harris discloses "render commands" in a "generic high-level syntax used to make the HTML pages," i.e., Wireless Abstract XML (WAX). *Id.* at 46. As support, Petitioner provides Harris's illustrative WAX document including Examples 1, 2, 3, and 4 as reproduced below (*Id.*):

```
<?xml version=" 1. 0" encoding="utf-8"?>
<wax:wax xmlns:wax="http://www.kargo.corn/wax" version="O.9">
    <wax:doc version="1.0">
        <wax:title>NY Nightlife</wax:title>
        <wax:block id="splash">
                <! --EXAMPLE 1 -->
            <wax : button href="index?a=rnain"
            keytype="accept" type="go" labelid="enter" />
            <wax:p align="center">
                <! --EXAMPLE 2 -->
                    <wax: img srcid="logo" alt="My Nightlife"
                        border="O" />
```

-continued

```
                    <wax:br/>
                <! --EXAMPLE 3 -->
                <wax: text id="welcome" />
                <! --EXAMPLE 4 -->
                <% if ((String)session.getAttribute("lang") = =
                    null)
                out .println ("<wax:a
                href=\ "index?a=chlang\ ">Choose
                Language</wax:a>");
                %>
                <wax:br/>
                <wax:br/>
            </wax:p>
        </wax:block>
    </wax:doc>
</wax:wax>
```

The above WAX document includes Examples 1, 2, 3, and 4 together with multiple tags, as exemplified by the following five lines that precede Examples 1, 2, 3, and 4 in the WAX document:

```
<?xml version=" 1. 0" encoding="utf-8"?>
<wax:wax xmlns:wax="http://www.kargo.corn/wax" version="O.9">
    <wax:doc version="1.0">
        <wax:title>NY Nightlife</wax:title>
        <wax:block id="splash">
```

Ex. 1007 ¶ 29; *see* Ex. 1002 ¶ 143. According to Petitioner, an ordinarily skilled artisan would have looked at the above WAX document and

"understood that the WAX language used a syntax that was device generic." Pet. 46 (citing Ex. 1002 ¶ 144).

Further, Petitioner asserts that "in the Hariki-Harris system, content data received by the mobile device for rendering is expressed in WAX or HTML, both using a syntax that is device independent (i.e., 'expressed in a syntax that is generic to said wireless device')." Pet. 47 (emphasis omitted) (citing Ex. 1002 ¶¶ 145–146).

(ii) Patent Owner's Contentions

Patent Owner disputes that the combined disclosures in Hariki and Harris teach limitation 1e. *See* Prelim. Resp. 40–43. First, Patent Owner asserts that Petitioner's identification of WAX documents as "compiled content" for limitation 1e conflicts with Petitioner's identification of HTML files as "compiled content" for limitations 1c and 1d. *Id.* at 41. Patent Owner also asserts that a WAX document does not correspond to "compiled content" according to limitation 1c because a WAX document is not "transmit[ed] to said wireless device" according to limitation 1c. *Id.* at 42. According to Patent Owner, Harris's MCF "performs a 'conversion of WAX into the languages used by the requesting mobile devices such as WML, HDML and HTML' prior to sending the converted language to the mobile device." *Id.* at 41–42 (emphasis omitted) (quoting Ex. 1007 ¶ 7).

Second, Patent Owner asserts that Harris discloses "convert[ing] WAX content to device-specific content" instead of "a syntax that is generic to said wireless device" according to limitation 1e. Prelim. Resp. 42 (emphasis omitted) (quoting Ex. 1007 ¶ 14) (citing Ex. 1007 ¶ 18). According to Patent Owner, "Harris notes even if a 'standardized language' is used, it still must be tailored for particular devices because 'even when

two devices employ the same language, there is no guarantee that they each interpret and render content the same way.'" *Id.* (quoting Ex. 1007 ¶ 3).

(iii) Analysis

Based on the current record, Petitioner establishes sufficiently that the combined disclosures in Hariki and Harris teach limitation 1e. *See* Pet. 44–45; Ex. 1002 ¶¶ 64, 141–142, 145–146, 211. As Petitioner asserts, "HTML is a standardized language that has the same syntax no matter what device" receives an HTML file, and thus generic to a receiving device. Ex. 1002 ¶ 145; *see id.* ¶¶ 64, 146, 211; Ex. 1018, 1–9; Pet. 44. Regarding a mobile device receiving an HTML file, Hariki discloses a server transmitting an HTML file over the Internet to a mobile device. Ex. 1006 ¶ 21; *see* Ex. 1002 ¶¶ 69, 130. Regarding a mobile device receiving an HTML file, Harris discloses the MCF translating content from WAX into "a device-specific language," such as HTML, and then transmitting the translated content to a requesting device. Ex. 1007 ¶¶ 18–19; *see id.* ¶¶ 8–9, 14, 16, 24, 27, code (57); Ex. 1002 ¶¶ 74, 132, 136.

Like HTML, WAX employs "a syntax that is generic to said wireless device" according to limitation 1e. Ex. 1007 ¶¶ 7–9, code (57); *see* Ex. 1002 ¶¶ 143–145. As Patent Owner asserts, however, a WAX document does not correspond to "compiled content" according to limitation 1c because a WAX document is not "transmit[ed] to said wireless device" according to limitation 1c. *See* Ex. 1007 ¶¶ 7, 18–19; Prelim. Resp. 42. Instead, the MCF translates content from WAX into "a device-specific language" before transmitting the translated content to a requesting device. *See* Ex. 1002 ¶ 132; Ex. 1007 ¶ 24, Fig. 4.

Patent Owner's assertion that Harris discloses "convert[ing] WAX content to device-specific content" instead of "a syntax that is generic to said wireless device" according to limitation 1e wrongly conflates "a syntax that is generic to said wireless device" such as HTML with a device-specific HTML file containing particular tags (markup symbols) that describe "the content in terms of how the content is displayed" on the device. *See* Ex. 1018, 1–6; Ex. 2005, 1:13–15; Prelim. Resp. 42, 44 (quoting Ex. 2005, 1:14–15).

(g) Limitation 1f

Claim 1 recites "wherein said custom configuration is applicable to said first and second compiled content." Ex. 1001, 20:55–57 (limitation 1f).

(i) Petitioner's Contentions

Petitioner contends that Hariki teaches limitation 1f. *See* Pet. 47–48. Specifically, Petitioner asserts that Hariki discloses that:

> (1) "[i]n general, UI skins allow a user to customize the 'look and feel' or application program environment of a device by altering display and/or sound output aspects of the device, such as backgrounds, title bars, buttons, alert sounds, and so on"; and
>
> (2) "[t]hrough the resource API functionality, the mobile device is able to change the UI skin of the application 506 by UI content packages that are downloaded from a UI content server or are pre-installed in the mobile handset, without requiring modification of the application itself."

Id. at 47 (alterations by Petitioner) (emphases omitted) (quoting Ex. 1006 ¶¶ 24, 42).

Further, Petitioner asserts that an ordinarily skilled artisan would have understood that "customizing the UI skin" for "the application program

environment or display and sound aspects of the device" using "the UI content package would mean that the converted resources (i.e., 'custom configuration') of the UI content package were applicable to all HTML files received from the web server and displayed in the application." Pet. 47–48 (citing Ex. 1002 ¶ 148).

(ii) Patent Owner's Contentions

Patent Owner disputes that Hariki teaches limitation 1f. *See* Prelim. Resp. 43–47. Specifically, Patent Owner asserts that "Hariki does not teach the UI skin affects the content displayed by the web browser" and instead teaches that "the UI skin may change the application environment" and "affect all applications. *Id.* at 44; *see id.* at 45. Patent Owner also asserts that the converted resources in a UI content package "are applicable to an application environment where the web browser is running, not content rendered by the web browser." *Id.* at 44.

(iii) Analysis

Based on the current record, Petitioner establishes sufficiently that Hariki teaches limitation 1f. *See* Pet. 47–48; Ex. 1002 ¶¶ 127, 131, 147–148, 151. As discussed above for limitation 1b, for "an application" on a mobile device "associated with" the recited "custom configuration," Hariki discloses that a mobile device may run "a web browser program to access the web pages served by" server 102, server 106, or "any other available content provider or supplemental server." Ex. 1006 ¶ 21; *see* Ex. 1002 ¶ 127; *supra* § IV.D.3(c)(iii).

Hariki also discloses that resource API 508 uses the converted resources in a UI content package associated with an application program to customize the application program, i.e., to customize the web browser

program. Ex. 1006 ¶¶ 19, 41–42, 44, 46–47, 50–51, code (57), Fig. 7; *see* Ex. 1002 ¶¶ 127, 147, 151; *supra* § IV.D.3(c)(iii). The customization to the web browser program "is applicable to" (1) a first HTML file corresponding to "first compiled content" and (2) a second HTML file corresponding to "second compiled content." *See* Ex. 1002 ¶¶ 131, 148; Ex. 1006 ¶ 21; *supra* § IV.D.3(d)(iii).

As for Patent Owner's assertion that "Hariki does not teach the UI skin affects the content displayed by the web browser," we disagree based on the current record. *See* Prelim. Resp. 44. For the reasons discussed above for limitation 1b, Hariki discloses application-level customization as well as device-level customization. *See supra* § IV.D.3(c)(iii).

(h) Limitation 1g

Claim 1 recites "wherein said compiled content and said custom configuration are usable by a graphical user interface comprising said plurality of rendering blocks to generate renderable content based on said compiled content and said custom configuration." Ex. 1001, 20:58–62 (limitation 1g).

(i) Petitioner's Contentions

Petitioner contends that the combined disclosures in Hariki and Harris teach limitation 1g. *See* Pet. 48–51. Specifically, Petitioner asserts that Hariki discloses that a mobile device may include:

(1) application 506 that "may be a software program or utility that alters the appearance or functionality of the mobile device, or it may be a program that, when executed, provides a service to the user," such as a web browser; and

(2) resource API 508 that "process[es] the applicable resource using the appropriate playback format

> depending upon the type of data or program elements in the resource."

Id. at 49–50 (quoting Ex. 1006 ¶¶ 41, 43) (citing Ex. 1002 ¶ 151).

Petitioner asserts that a web browser on a mobile device "receives both HTML files (i.e., 'compiled content') and converted resources (i.e., 'custom configuration') in the UI content package, interacts with a 'resource API 508, which contains a number of functional components such as package selector 510, description file parser 512, an engine selector 520, and one or more engines.'" Pet. 50 (quoting Ex. 1006 ¶ 43). Petitioner asserts that the one or more engines (1) process "the applicable resource using the appropriate playback format," such as a Flash engine for an applet or a JPEG engine for a photograph, and (2) convert "each resource file to a format or embodiment that is compatible with the application 506," i.e., "in terms of parameters such as image size, color, position, and so on." *Id.* (quoting Ex. 1006 ¶ 47).

Further, Petitioner asserts that an ordinarily skilled artisan would have understood that "Hariki's resource API and engines use the converted resources in the UI content package and HTML file resources and format them into renderable content for the application for display." Pet. 50 (emphasis omitted) (citing Ex. 1002 ¶ 153; Ex. 1006 ¶ 24).

Additionally, Petitioner contends that Harris discloses "displaying the content generated for the specific mobile devices," including device-specific HTML files. Pet. 51 (emphasis omitted). As support, Petitioner quotes Harris's claim 1 as follows: "providing content, said content capable of being displayed to a user of a mobile device interfaced with said network." *Id.* (quoting Ex. 1007, 11). Petitioner also quotes Harris's disclosure that

"an automated testing environment will make sure content will display[] correctly before" deploying HTML files to a device. *Id.* at 51 (alteration by Petitioner) (quoting Ex. 1007 ¶ 35).

(ii) Patent Owner's Contentions

Patent Owner disputes that the combined disclosures in Hariki and Harris teach limitation 1g. *See* Prelim. Resp. 47–50. Specifically, Patent Owner asserts that receiving "both HTML files (i.e., 'compiled content') and converted resources (i.e., 'custom configuration')" does not "show that Hariki's GUI uses rendering blocks to render content based on both." *Id.* at 47 (emphasis omitted) (quoting Pet. 50). Patent Owner also asserts that "Hariki does not teach" and "Petitioner does not explain" how "HTML files sent to an application would or could" reference the converted resources in a UI content package. *Id.* at 47–48. According to Patent Owner, Petitioner "does not tie the HTML to any of the converted resources." *Id.* at 50.

Regarding Harris's disclosure that "an automated testing environment will make sure content will display[] correctly before" deploying HTML files to a device, Patent Owner asserts that if display occurs before deployment to a device where "the UI skin resources are accessed through the resource API, any test rendering cannot be using the UI skin resources." Prelim. Resp. 50.

(iii) Analysis

Based on the current record, Petitioner establishes sufficiently that the combined disclosures in Hariki and Harris teach limitation 1g. *See* Pet. 48–51; Ex. 1002 ¶¶ 149–155. Specifically, Hariki discloses that to customize the user interface for application program 506, resource API 508 "reads the description file for the selected UI content package" and

"retrieves each resource referenced by the description file selected for the UI content package" as located by package selector 510 and description file parser 512. Ex. 1006 ¶¶ 47, 50–51, Fig. 7. After resource API 508 "retrieves each resource referenced by the description file selected for the UI content package," engine selector 520 in resource API 508 "selects the proper engine" for processing each resource. *Id.* ¶¶ 47, 51; *see id.* ¶ 19, code (57). A selected engine converts the "applicable resource" to "a format or embodiment that is compatible with" application program 506. *Id.* ¶¶ 43, 47. After appropriate formatting, resource API 508 provides "all referenced resources to" application program 506 for display or sound output. *Id.* ¶ 51, Fig. 7; *see id.* ¶ 24.

As Petitioner asserts, an ordinarily skilled artisan would have understood that "Hariki's resource API and engines use the converted resources in the UI content package and HTML file resources and format them into renderable content for the application for display." Ex. 1002 ¶ 153; *see* Pet. 50.

Additionally, as Petitioner contends, Harris discloses "displaying the content generated for the specific mobile devices." Ex. 1002 ¶ 155; Ex. 1007 ¶¶ 18, 24, claim 1; *see* Pet. 51. For example, Harris explains that a "Date Chooser" renders "one way on the limited screen sizes of" some mobile devices and "another way on a PDA (all on one screen)." Ex. 1007 ¶ 18.

As for Patent Owner's assertion that "Hariki does not teach" and "Petitioner does not explain" how "HTML files sent to an application would or could" reference the converted resources in a UI content package, Hariki does not indicate that "HTML files sent to an application" reference the

converted resources in a UI content package. *See* Ex. 1006 ¶¶ 21, 41, 44, 46, 50, Fig. 7; Prelim. Resp. 47–48. Instead, Hariki explains that after a user selects a UI content package for downloading, setting application 504 sets or changes "the UI content package data for the application program," i.e., "the UI package file path." Ex. 1006 ¶¶ 44, 50, Fig. 7 (step 701). Application program 506, e.g., a web browser but not an HTML file, "requests a resource by specifying the resource ID (e.g., ID_1)" rather than "by file name or directory (storage location) path." *Id.* ¶¶ 21, 41, 50, Fig. 7. Using the UI package file path from setting application 504 and the resource ID from application program 506, package selector 510 and description file parser 512 "locate the appropriate UI content package containing the referenced resource." *Id.* ¶ 50; *see id.* ¶¶ 44, 46.

As for Harris's disclosure that "an automated testing environment will make sure content will display[] correctly before" deploying HTML files to a device and Patent Owner's assertion that if display occurs before deployment to a device where "the UI skin resources are accessed through the resource API, any test rendering cannot be using the UI skin resources," Patent Owner mischaracterizes Harris's disclosure. *See* Ex. 1007 ¶ 35; Prelim. Resp. 50. Harris does not indicate that automated testing involves deployment to a device where "the UI skin resources are accessed through the resource API." *See* Ex. 1007 ¶ 35. Instead, Harris discloses that automated testing involves content "authored in HTML, translated to WAX, and then transformed into content" in another language, such as WML, HDML, or HTML. Ex. 1007 ¶ 35; *see id.* ¶¶ 3, 7. Additionally, Harris describes automated testing as optional, not mandatory. *Id.* ¶ 35.

(i) Alleged Reasons to Combine the Teachings of the References

Petitioner identifies reasons that would have prompted an ordinarily skilled artisan to combine Harris's teachings with Hariki's teachings in the way Petitioner proposes, e.g., to "provide expanded functionality" to a mobile device. *See* Pet. 40–41, 51–52. Further, Petitioner asserts that an ordinarily skilled artisan "would have had a reasonable expectation of success" in combining the teachings of the references. *Id.* at 40–41, 52–53. Dr. Bederson's testimony supports Petitioner's positions. *See* Ex. 1002 ¶¶ 133–135, 154–159, 211.

For instance, Dr. Bederson testifies that:

(1) Hariki discloses "sending HTML files to a mobile device" but "does not expressly disclose how the HTML files are generated"; and

(2) Harris discloses "a detailed process of sending HTML files to a client" where "the HTML files are tailored to the particular mobile device" but does not explain how to customize a user interface to "the taste of the individual."

Ex. 1002 ¶¶ 132–134 (quoting Ex. 1007 ¶ 7). Dr. Bederson then explains that an ordinarily skilled artisan would have been motivated to combine Harris's teachings with Hariki's teachings because "while each discloses sending content specific to a mobile device, each describes in detail different aspects of the customization." *Id.* ¶ 135.

Further, Dr. Bederson testifies that Hariki discloses that the resource API uses "the Flash engine for an applet or JPEG engine for a photograph" and that "different or new versions of engines for different types of data objects or programs can be implemented in the resource API by adding or modifying the engine components." Ex. 1002 ¶¶ 152, 154 (emphases omitted) (quoting Ex. 1006 ¶ 51) (citing Ex. 1006 ¶ 43); *see id.* ¶ 173. He

also testifies that Harris discloses "displaying the content generated for the specific mobile devices," including device-specific HTML files. *Id.* ¶ 155. Dr. Bederson then explains that an ordinarily skilled artisan would have been motivated by Harris's disclosure to modify Hariki's "resource API to include additional engines to convert and render HTML files for display on the mobile device" and "provide expanded functionality" for the mobile device. *Id.* ¶¶ 156–157.

Patent Owner disputes that an ordinarily skilled artisan would have been motivated to combine Harris's teachings with Hariki's teachings. *See* Prelim. Resp. 50–51. Regarding modifying Hariki's "resource API to include additional engines to convert and render HTML files for display on the mobile device," Patent Owner asserts that Hariki's mobile device already runs "a web browser program to access [and render] the web pages served by . . . any . . . available content provider." *Id.* at 51 (alterations by Patent Owner) (quoting Ex. 1006 ¶ 21). Patent Owner also asserts that Dr. Bederson "simply does not explain why Harris' solution is deficient, or would be improved in the slightest, by changing Hariki's current browser functionality to use the API rendering engine to process HTML files." *Id.*

Based on the current record, Petitioner establishes sufficiently that an ordinarily skilled artisan would have had reasons, e.g., as articulated by Dr. Bederson, to combine Harris's teachings with Hariki's teachings in the way Petitioner proposes. *See* Pet. 40–41, 51–52; Ex. 1002 ¶¶ 133–135, 154–157. Petitioner also establishes sufficiently that an ordinarily skilled artisan would have had a reasonable expectation of success in combining the teachings of the references. *See* Pet. 40–41, 52–53; Ex. 1002 ¶¶ 134, 158–159, 211.

Patent Owner does not address Dr. Bederson's explanation that an ordinarily skilled artisan would have been motivated to combine Harris's teachings with Hariki's teachings because "while each discloses sending content specific to a mobile device, each describes in detail different aspects of the customization." *See* Ex. 1002 ¶ 135; Prelim. Resp. 21–51.

As for Dr. Bederson's explanation that an ordinarily skilled artisan would have been motivated by Harris's disclosure to modify Hariki's "resource API to include additional engines to convert and render HTML files for display on the mobile device" and "provide expanded functionality" for the mobile device, the explanation seems reasonable based on the current record. *See* Ex. 1002 ¶¶ 154–157. Hariki discloses that resource API 508 includes "one or more engines, such as Flash engine 514, PNG (portable network graphics) engine 516, JPEG (joint photographic experts group) engine 518, and any other similar engines." Ex. 1006 ¶ 43, Fig. 5; *see* Ex. 1002 ¶¶ 151–152. But Hariki does not expressly disclose using one or more engines in resource API 508 to generate renderable content from received HTML files. *See, e.g.*, Ex. 1006 ¶ 43.

Patent Owner's assertion that Dr. Bederson "simply does not explain why Harris' solution is deficient, or would be improved in the slightest, by changing Hariki's current browser functionality to use the API rendering engine to process HTML files" mischaracterizes the reason for the proposed modification to Hariki's resource API. *See* Ex. 1002 ¶¶ 154–157; Pet. 51–52; Prelim. Resp. 51. The proposed modification to Hariki's resource API does not rest on a deficiency in Harris or an improvement to Harris taught by Hariki. *See* Ex. 1002 ¶¶ 154–157; Pet. 51–52. Rather, the proposed modification to Hariki's resource API rests on an improvement to

the resource API taught by Harris, i.e., "include additional engines to convert and render HTML files for display" and "provide expanded functionality" for the mobile device. *See* Ex. 1002 ¶¶ 154–157; Pet. 51–52. Patent Owner's assertion also disregards Dr. Bederson's explanation that the proposed modification to Hariki's resource API would "provide expanded functionality" for the mobile device. *See* Ex. 1002 ¶ 157; Pet. 52; Prelim. Resp. 51.

(j) Preliminary Conclusion About Obviousness/Nonobviousness

As discussed above, Petitioner's analysis addresses how the combined disclosures in Hariki and Harris teach claim 1's subject matter. *See supra* §§ IV.D.3(a)–(h). Additionally, Petitioner provides reasons with rational underpinnings as to why an ordinarily skilled artisan would have been motivated to combine Harris's teachings with Hariki's teachings in the way Petitioner proposes and would have had a reasonable expectation of success. *See supra* § IV.D.3(i). In sum, Petitioner demonstrates a reasonable likelihood of proving that claim 1 is unpatentable under § 103(a) as obvious over Hariki and Harris.

4. INDEPENDENT CLAIM 9

Claims 1 and 9 recite similar limitations, although their respective preambles differ. *Compare* Ex. 1001, 20:40–62, *with id.* at 21:19–43. Claim 1's preamble recites "[a] method of generating content that is renderable by a wireless device." *Id.* at 20:40–41. Claim 9's preamble recites "[a] non-transitory computer readable medium comprising instructions therein that when executed by a processor implement a method of generating content that is renderable by a wireless device." *Id.* at 21:19–22.

For claim 9, Petitioner provides an analysis supported by Dr. Bederson's testimony about how the combined disclosures in Hariki and Harris teach the claimed subject matter. *See* Pet. 63–64; Ex. 1002 ¶¶ 177–184. For claim 9's preamble, for example, Petitioner explains that:

> (1) Hariki discloses "instructions embodied in various machine-readable or computer-readable media"; and
>
> (2) Harris discloses a "medium holding computer-executable steps for a method."

Pet. 63 (emphasis omitted) (quoting Ex. 1006 ¶ 54; Ex. 1007, claim 21); *see* Ex. 1002 ¶ 177.

Patent Owner disputes that the combined disclosures in Hariki and Harris teach claim 9's subject matter for the reasons Patent Owner disputes that the combined disclosures teach claim 1's subject matter. *See* Prelim. Resp. 21–51.

Based on the current record and for the reasons discussed above, we consider Patent Owner's patentability arguments for claim 1 unavailing. *See supra* §§ IV.D.3(c)–(h). Based on the current record and for (1) the reasons advanced by Petitioner and supported by Dr. Bederson's testimony and (2) the reasons discussed above for claim 1, Petitioner establishes sufficiently that the combined disclosures in Hariki and Harris teach claim 9's subject matter. *See* Pet. 63–64; Ex. 1002 ¶¶ 177–184; *supra* §§ IV.D.3(a)–(h). Additionally, as discussed above for claim 1, Petitioner provides reasons with rational underpinnings as to why an ordinarily skilled artisan would have been motivated to combine Harris's teachings with Hariki's teachings in the way Petitioner proposes and would have had a reasonable expectation of success. *See* Pet. 40–41, 51–53; Ex. 1002 ¶¶ 133–135, 154–159, 211; *supra* § IV.D.3(i). Hence, Petitioner

demonstrates a reasonable likelihood of proving that claim 9 is unpatentable under § 103(a) as obvious over Hariki and Harris.

5. DEPENDENT CLAIMS 2, 4–8, 10, AND 12–16

Claims 2 and 4–8 depend directly or indirectly from claim 1. Ex. 1001, 20:63–64, 21:1–18. Claims 10 and 12–16 depend directly or indirectly from claim 9. *Id.* at 21:44–46, 21:51–22:18.

For claims 2, 4–8, 10, and 12–16, Petitioner provides an analysis supported by Dr. Bederson's testimony about how the combined disclosures in Hariki and Harris teach the claimed subject matter. *See* Pet. 53–62, 64–66; Ex. 1002 ¶¶ 160, 163–176, 185, 187–191.

Patent Owner disputes that the combined disclosures in Hariki and Harris teach the subject matter in claims 2, 4–8, 10, and 12–16. *See* Prelim. Resp. 58. Specifically, Patent Owner asserts that Petitioner fails to show that claims 1 and 9 are unpatentable and, therefore, fails to show that "any dependent claims are unpatentable." *Id.* (citing *In re Fine*, 837 F.2d 1071, 1076 (Fed. Cir. 1988)).

Based on the current record and for (1) the reasons advanced by Petitioner and supported by Dr. Bederson's testimony and (2) the reasons discussed above for claims 1 and 9, Petitioner establishes sufficiently that the combined disclosures in Hariki and Harris teach the subject matter in claims 2, 4–8, 10, and 12–16. *See* Pet. 53–62, 64–66; Ex. 1002 ¶¶ 160, 163–176, 185, 187–191; *supra* §§ IV.D.3–IV.D.4. Hence, Petitioner demonstrates a reasonable likelihood of proving that claims 2, 4–8, 10, and 12–16 are unpatentable under § 103(a) as obvious over Hariki and Harris.

6. Dependent Claims 3 and 11

Claim 3 depends directly from claim 1 and recites "wherein said compiled content is partially resultant from said application operating on a remote server." Ex. 1001, 20:65–67. Claim 11 depends directly from claim 9 and recites subject matter similar to claim 3. *Id.* at 21:47–50.

Petitioner contends that the combined disclosures in Hariki and Harris teach the limitations in claims 3 and 11. *See* Pet. 53–54, 65. Specifically, referencing its contentions for limitations 1b and 1c, Petitioner asserts that Hariki discloses "a remotely executed web server application," e.g., on server 102, that sends HTML files when requested by "a web browser application executed on a mobile device," e.g., on mobile device 108. *Id.* at 53–54 (citing Ex. 1002 ¶ 161; Ex. 1006 ¶ 27). Further, referencing its contentions for limitations 1b and 1c, Petitioner asserts that (1) Hariki's "UI content package is 'associated' with the web server application" and (2) "the HTML files are specific to the web server application." *Id.* at 53–54. Petitioner also asserts that an ordinarily skilled artisan "would have understood that the HTML files are generated as a result of both the web browser and web server" because "the web browser must request the HTML files (i.e., 'compiled content') from the web server." *Id.* at 54.

Based on the current record, Petitioner fails to establish sufficiently that the combined disclosures in Hariki and Harris teach the limitations in claims 3 and 11. *See* Pet. 53–54, 65; Ex. 1002 ¶¶ 161–162, 186. For the reasons discussed above for limitation 1b, Petitioner fails to establish sufficiently that Hariki teaches "an application" on a server, i.e., a web server application, "associated with" the recited "custom configuration." *See* Pet. 36–37; Ex. 1002 ¶¶ 128–129; *supra* § IV.D.3(c)(iii). Thus,

Petitioner fails to establish sufficiently that Hariki teaches "said application operating on a remote server" according to claims 3 and 11. *See* Pet. 53–54, 65; Ex. 1002 ¶¶ 161–162, 186.

Also, based on the current record and for the reasons discussed above for limitation 1b, we disagree with Petitioner that Hariki's "UI content package is 'associated' with the web server application." *See* Pet. 53–54; *supra* § IV.D.3(c)(iii). Among other things, Hariki does not indicate that a user interface authoring tool that creates a UI content package interacts with a web server application that sends HTML files to a requesting web browser application. *See, e.g.*, Ex. 1006 ¶¶ 21, 25–33, 36–40, Figs. 1–2.

Further, Petitioner fails to identify any disclosure in Harris that teaches associating the recited "custom configuration" with a web server application. *See* Pet. 35–37, 53–54, 65; Ex. 1002 ¶¶ 127–129, 161–162, 186.

Hence, based on the current record, Petitioner has not demonstrated a reasonable likelihood of proving that claims 3 and 11 are unpatentable under § 103(a) as obvious over Hariki and Harris.

7. INDEPENDENT CLAIM 17

(a) Introduction

For claim 17, Petitioner provides an analysis supported by Dr. Bederson's testimony about how the combined disclosures in Hariki and Harris teach the claimed subject matter. *See* Pet. 66–72; Ex. 1002 ¶¶ 192–206.

Patent Owner disputes that Hariki and Harris teach limitations 17e, 17f, and 17g for the reasons Patent Owner disputes that Hariki and Harris teach the similar limitations in claim 1, i.e., limitations 1e, 1f, and 1g. *See*

Prelim. Resp. 40–51. Based on the current record and for the reasons discussed above for limitations 1e, 1f, and 1g, Petitioner establishes sufficiently that Hariki and Harris teach limitations 17e, 17f, and 17g. *See supra* §§ IV.D.3(f)(iii), IV.D.3(g)(iii), IV.D.3(h)(iii).

Additionally, Patent Owner disputes that Hariki and Harris teach limitations 17b, 17c, and 17d. *See* Prelim. Resp. 51–58. Based on the current record and for the reasons explained below, we agree with Patent Owner that Petitioner fails to establish sufficiently that Hariki and Harris teach limitations 17b, 17c, and 17d. *See infra* §§ IV.D.7(b)–(d).

(b) Limitation 17b

Claim 17 recites "a library of custom configuration data comprising a custom configuration that configures a plurality of rendering blocks of said wireless device to render content in a manner customized to an application from said library of applications requested by said wireless device." Ex. 1001, 22:22–26 (limitation 17b).

Petitioner contends that Hariki teaches limitation 17b for the reasons Hariki teaches limitations 1a and 1b concerning "a custom configuration" associated with "an application" and because Hariki discloses "generating multiple UI content packages for download to different mobile devices [a]nd for different programs." Pet. 67–69.

Patent Owner responds by asserting that Petitioner identifies (1) the "suite of programs" in Hariki's user interface authoring tool 104 as including "an application from said library of applications" and (2) the "backgrounds, title bars, buttons, [and] alert sounds" in Hariki's mobile device as "a plurality of rendering blocks of said wireless device" according to limitation 17b. Prelim. Resp. 51–53. Patent Owner then contends that user

interface authoring tool 104 "does not even run on the mobile device" where the identified "rendering blocks" reside. *Id.* at 52; *see id.* at 53. Therefore, according to Patent Owner, the identified "rendering blocks" could not "render content in a manner customized to an application from said library of applications," i.e., customized to an application from the "suite of programs" in user interface authoring tool 104 on a server. *Id.* at 52.

Based on the current record and for the reasons advanced by Patent Owner, we agree with Patent Owner that Petitioner fails to establish sufficiently that Hariki teaches limitation 17b. *See* Pet. 67–69; Prelim. Resp. 51–53; Ex. 1002 ¶¶ 195–199.

(c) Limitation 17c

Claim 17 recites "a layout solver that transmits compiled content to said wireless device, said compiled content comprising (i) first compiled content specific to a first page of said application and (ii) second compiled content specific to a second page of said application." Ex. 1001, 22:27–31 (limitation 17c).

Petitioner contends that the combined disclosures in Hariki and Harris teach limitation 17c for the reasons the combined disclosures teach limitation 1c and because Harris's MCF "translates a device generic template (e.g., WAX language) to a device specific set of commands (e.g., HTML) using a device and compatibility registry that define a mobile device's rendering capabilities." Pet. 69–71. According to Petitioner, an ordinarily skilled artisan would have understood that Hariki's web browser "processes the HTML to generate and layout the graphical user interface that is created for display." *Id.* at 71–72.

Patent Owner responds by asserting that "Petitioner has not identified a layout solver" according to limitation 17c. *See* Prelim. Resp. 54–57. In particular, Patent Owner contends that "Hariki does not indicate" that (1) any pages of user interface authoring tool 104 are "transmitted" or (2) "the UI content packages sent to the wireless devices are 'applications.'" *Id.* at 55.

Based on the current record, we agree with Patent Owner that Petitioner fails to establish sufficiently that the combined disclosures in Hariki and Harris teach limitation 17c. *See* Pet. 69–71; Prelim. Resp. 54–57; Ex. 1002 ¶¶ 200–203. For instance, Hariki does not indicate that content "specific to" a "page" of "an application from said library of applications" mapped to user interface authoring tool 104 is "transmitted." *See* Ex. 1006 ¶¶ 36–37, Fig. 4.

(d) <u>Limitation 17d</u>

Claim 17 recites "wherein said compiled content is generated in part from execution of said application by said server." Ex. 1001, 22:32–34 (limitation 17d).

Petitioner contends that the combined disclosures in Hariki and Harris teach limitation 17d for the reasons the combined disclosures teach limitation 1d. Pet. 72.

Patent Owner responds by asserting that Petitioner did not identify the "suite of programs" in Hariki's user interface authoring tool 104 as the "application" required by limitation 1d. Prelim. Resp. 58. Additionally, Patent Owner contends that user interface authoring tool 104 does not "generate[] in part" the HTML files that Petitioner identifies as "compiled content." *Id.*

Based on the current record and for the reasons advanced by Patent Owner, we agree with Patent Owner that Petitioner fails to establish sufficiently that the combined disclosures in Hariki and Harris teach limitation 17d. *See* Pet. 72; Prelim. Resp. 57–58; Ex. 1002 ¶ 204.

(e) Preliminary Conclusion About Obviousness/Nonobviousness

For the reasons discussed above, Petitioner has not established sufficiently that Hariki and Harris teach limitations 17b, 17c, and 17d. *See supra* §§ IV.D.7(b)–(d). Hence, based on the current record, Petitioner has not demonstrated a reasonable likelihood of proving that claim 17 is unpatentable under § 103(a) as obvious over Hariki and Harris.

8. DEPENDENT CLAIMS 18–20

Claims 18–20 depend directly from claim 17. Ex. 1001, 22:44–52. Hence, claims 18–20 incorporate all the limitations in claim 17. 35 U.S.C. § 112 ¶ 4 (2006).

Based on the current record and for the reasons discussed above for claim 17, Petitioner has not demonstrated a reasonable likelihood of proving that claims 18–20 are unpatentable under § 103(a) as obvious over Hariki and Harris. *See supra* §§ IV.D.7(b)–(e).

V. COMPELLING MERITS

A. Background

"Compelling, meritorious challenges are those in which the evidence, if unrebutted in trial, would plainly lead to a conclusion that one or more claims are unpatentable by a preponderance of the evidence." Interim Procedure at 4. "A challenge can only 'plainly lead to a conclusion that one or more claims are unpatentable' if it is highly likely that the petitioner would prevail with respect to at least one challenged claim." *OpenSky*

Indus., LLC v. VLSI Tech. LLC, IPR2021-01064, Paper 102 at 49 (Oct. 4, 2022) (precedential) (citation omitted) (quoting Interim Procedure at 4).

B. Contentions by the Parties

Petitioner contends that the Petition "raises a compelling, meritorious challenge" that Patent Owner "cannot meaningful[ly] rebut." Pet. 77.

Patent Owner contends that Petitioner "has not even met the normal institution standard whereby there is a 'reasonable likelihood' that the challenger would prevail on one or more claims, much less the 'highly likely' compelling standard." Prelim. Resp. 66 (citation omitted) (citing 35 U.S.C. § 314(a)).

Patent Owner also contends that Petitioner's reliance on "plain and ordinary meaning" in this proceeding conflicts with Petitioner's position in the California case where Petitioner proposed explicit constructions for certain claim terms. Prelim. Resp. 20–21, 65; *see supra* § IV.C. As an example, Patent Owner asserts that Petitioner "proposed that 'render commands' found in every claim must be an 'instruction'—that Petitioner says is a command that causes a device to do something, such as perform an action—yet does not explain how the petitioner-identified HTML are 'instructions,' merely stating that HTML is a 'high-level syntax.'" Prelim. Resp. 65 (citation omitted) (citing Pet. 45–47; Ex. 2017, 13–14).

Further, Patent Owner asserts that the Board "should not allow Petitioner to silently disavow their previously proposed district court proposal and proceed with the inconsistent and ill-defined plain and ordinary meaning in a stretch to show unpatentability." Prelim. Resp. 65.

C. Analysis

Based on the current record, it is highly likely that Petitioner will prevail with respect to at least independent claims 1 and 9. Supported by Dr. Bederson's testimony, Petitioner explains how the combined disclosures in Hariki and Harris teach each limitation in claims 1 and 9. *See* Pet. 25–53, 63–64; Ex. 1002 ¶¶ 107–127, 130–159, 177–184; *supra* §§ IV.D.3–IV.D.4. Based on the current record, Patent Owner does not identify any limitation plausibly missing from the cited prior art. *See* Prelim. Resp. 21–51; *supra* §§ IV.D.3–IV.D.4. And Patent Owner does not present any testimony undermining Dr. Bederson's testimony. Although Patent Owner makes many arguments against unpatentability, at this stage of the proceeding Patent Owner's arguments do not cast any doubt on Petitioner's showing that Hariki and Harris teach each limitation in claims 1 and 9. *See* Prelim. Resp. 21–51; *supra* §§ IV.D.3–IV.D.4.

Further, Petitioner provides sound reasons why an ordinarily skilled artisan would have been motivated to combine Harris's teachings with Hariki's teachings in the way Petitioner proposes and would have had a reasonable expectation of success. *See* Pet. 40–41, 51–53; Ex. 1002 ¶¶ 133–135, 154–159, 211. Based on the current record, Patent Owner does not identify any arguable deficiency in Petitioner's showing. *See, e.g.*, Prelim. Resp. 50–51.

Additionally, Patent Owner does not present any evidence or argument regarding objective indicia of nonobviousness. *See, e.g.*, Prelim. Resp. 21–58.

In short, Petitioner presents compelling evidence of unpatentability because the evidence in the current record, if unrebutted during trial, would

"plainly lead to a conclusion" that claims 1 and 9 are unpatentable by "a preponderance of the evidence." *See* Interim Procedure at 4.

As for claim construction, whether Petitioner's reliance on "plain and ordinary meaning" in this proceeding conflicts with Petitioner's position in the California case has no bearing on whether Petitioner presents compelling evidence of unpatentability in this proceeding. In any event, "[t]here is nothing to prevent a petitioner from advancing one construction in the District Court as an infringement defendant and a different construction as a Petitioner before the Board. In fact, it happens all the time." *Samsung Elecs. Co. v. Smart Mobile Techs. LLC*, IPR2022-01248, Paper 13 at 58 (PTAB Jan. 24, 2023).

As for the alleged example inconsistency in Petitioner's positions regarding "render commands," Patent Owner mischaracterizes Petitioner's position in this proceeding. *See* Pet. 44–47; Prelim. Resp. 65. For limitation 1e, Petitioner asserts that Harris discloses "render commands" in a "generic high-level syntax used to make the HTML pages," i.e., in Wireless Abstract XML (WAX), not that "HTML is a 'high-level syntax.'" Pet. 46; *see* Prelim. Resp. 65.

Further, Petitioner asserts that "HTML is a standardized language that has the same syntax no matter what device" receives an HTML file. Pet. 44 (citing Ex. 1002 ¶ 145). Petitioner also asserts that an ordinarily skilled artisan would have understood that an HTML file contains a "compilation of tags" aggregated into the HTML file that include "low level commands to render content" on a device. *Id.* at 38 (citing Ex. 1002 ¶ 130). We discern nothing inconsistent between the assertion that HTML "tags" correspond to "low level commands to render content" on a device and the assertion that

an "instruction" is "a command that causes a device to do something." *See id.*; Prelim. Resp. 65.

Additionally, as discussed above, Patent Owner does not explain how Petitioner's proposed explicit constructions for certain claim terms in the California case conflict with how Petitioner applies those claim terms to the asserted references in this proceeding. *See, e.g.*, Prelim. Resp. 20–34, 40–51, 65; *supra* § IV.C.

VI. CONCLUSION

Based on the arguments and evidence presented by the parties, we determine that there is a reasonable likelihood Petitioner would prevail with respect to at least one claim challenged in the Petition. Hence, we institute an *inter partes* review of all challenged claims on all challenges included in the Petition. *See SAS Inst. Inc. v. Iancu*, 138 S. Ct. 1348, 1355 (2018) (noting that the language of 35 U.S.C. § 314(b) "indicates a binary choice—either institute review or don't"); *PGS Geophysical AS v. Iancu*, 891 F.3d 1354, 1360 (Fed. Cir. 2018) (interpreting the statute as requiring "a simple yes-or-no institution choice respecting a petition, embracing all challenges included in the petition"). Additionally, we decline to exercise our discretion under § 314(a) to deny institution.

At this preliminary stage, we have not made a final determination about the patentability of any challenged claim, the construction of any claim term, phrase, or limitation, or any other legal or factual issue.

VII. ORDER

Accordingly, it is

ORDERED that, pursuant to 35 U.S.C. § 314(a), an *inter partes* review of claims 1–20 in the '715 patent is instituted on all challenges included in the Petition; and

FURTHER ORDERED that, according to 35 U.S.C. § 314(c) and 37 C.F.R. § 42.4, notice is hereby given of the institution of a trial that commences on the entry date of this decision.

For PETITIONER:

Aliza George Carrano
Indranil Mukerji
J. Christopher Moulder
WILLKIE FARR & GALLAGHER LLP
acarrano@willkie.com
imukerji@willkie.com
cmoulder@willkie.com

For PATENT OWNER:

Joshua S. Wyde
Steven T. Jugle
ALAVI & ANAIPAKOS PLLC
jwyde@aatriallaw.com
sjugle@aatriallaw.com