US 20130124961A1

(19) United States
(12) Patent Application Publication
Linburn
(10) Pub. No.: US 2013/0124961 A1
(43) Pub. Date: May 16, 2013

(54) USER INTERFACES AND METHODS TO CREATE ELECTRONIC DOCUMENTS WITH FORMS IMPLEMENTING CONTENT INPUT FIELDS

(75) Inventor: **Carol E. Linburn**, San Francisco, CA (US)

(73) Assignee: **Adobe Systems Incorporated**, San Jose, CA (US)

(21) Appl. No.: **11/731,687**

(22) Filed: **Mar. 30, 2007**

Publication Classification

(51) **Int. Cl.**
G06F 17/24 (2006.01)

(52) **U.S. Cl.**
CPC *G06F 17/243* (2013.01)
USPC **715/224**

(57) **ABSTRACT**

Embodiments of the invention relate generally to computing devices and systems, software, computer programs, applications, and user interfaces, and more particularly, to implementing content input fields in forms to create electronic documents, among other things.

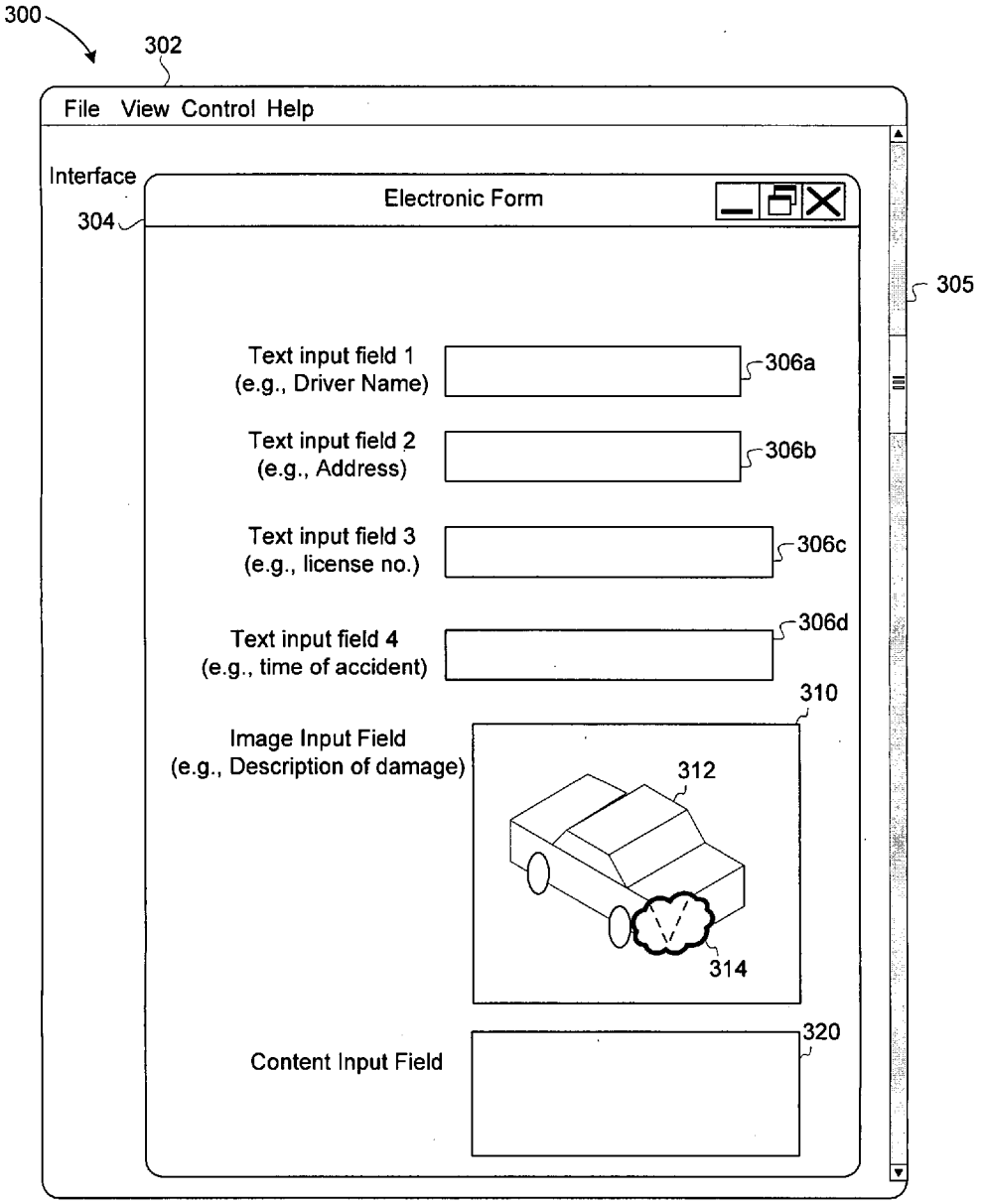

Netflix v. GoTV
IPR2023-00758
Netflix Ex. 1018

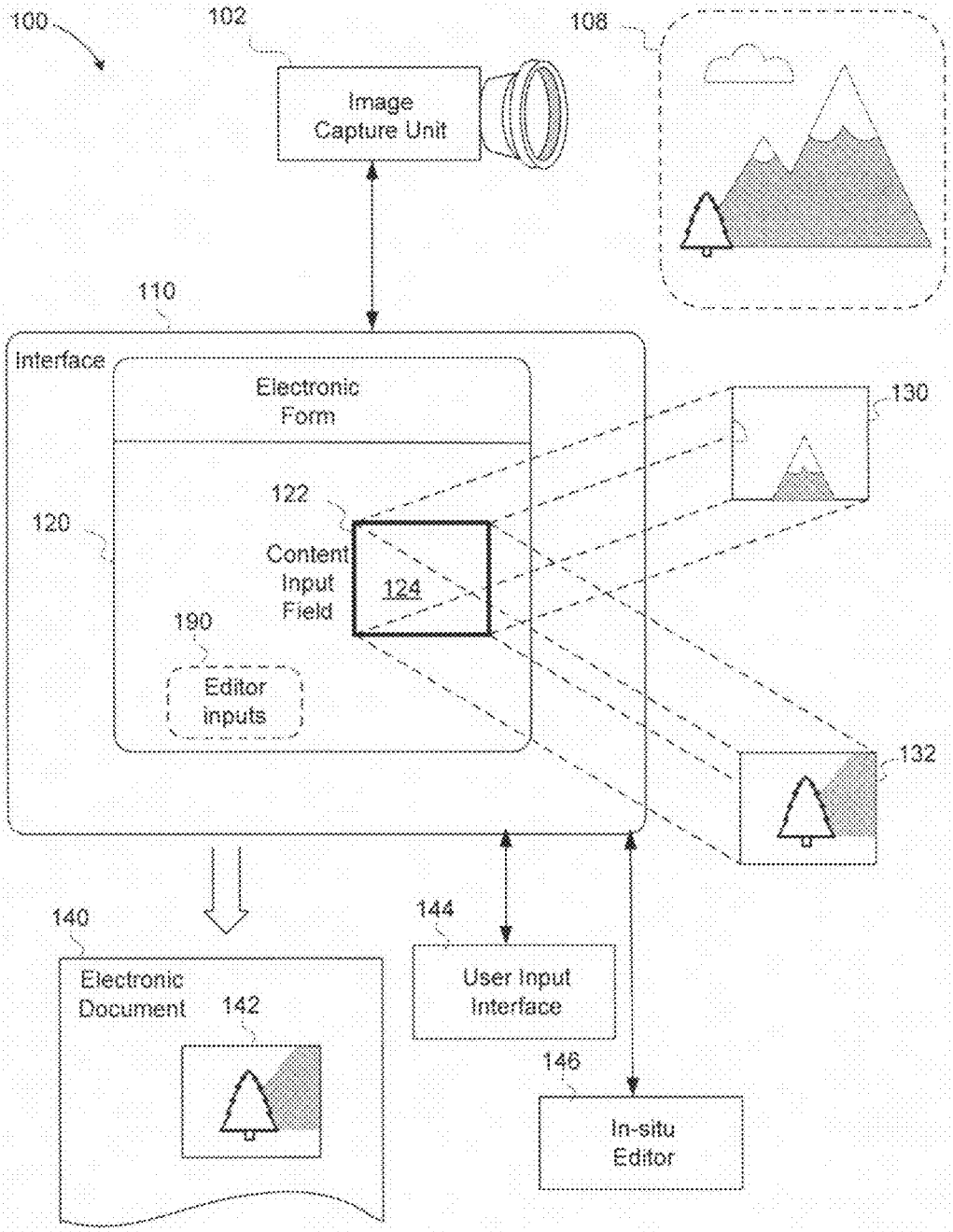
100
102
Image Capture Unit
108
110
Interface
Electronic Form
130
122
120
Content Input Field
124
190
Editor inputs
132
140
Electronic Document
142
144
User Input Interface
146
In-situ Editor

FIG. 1A

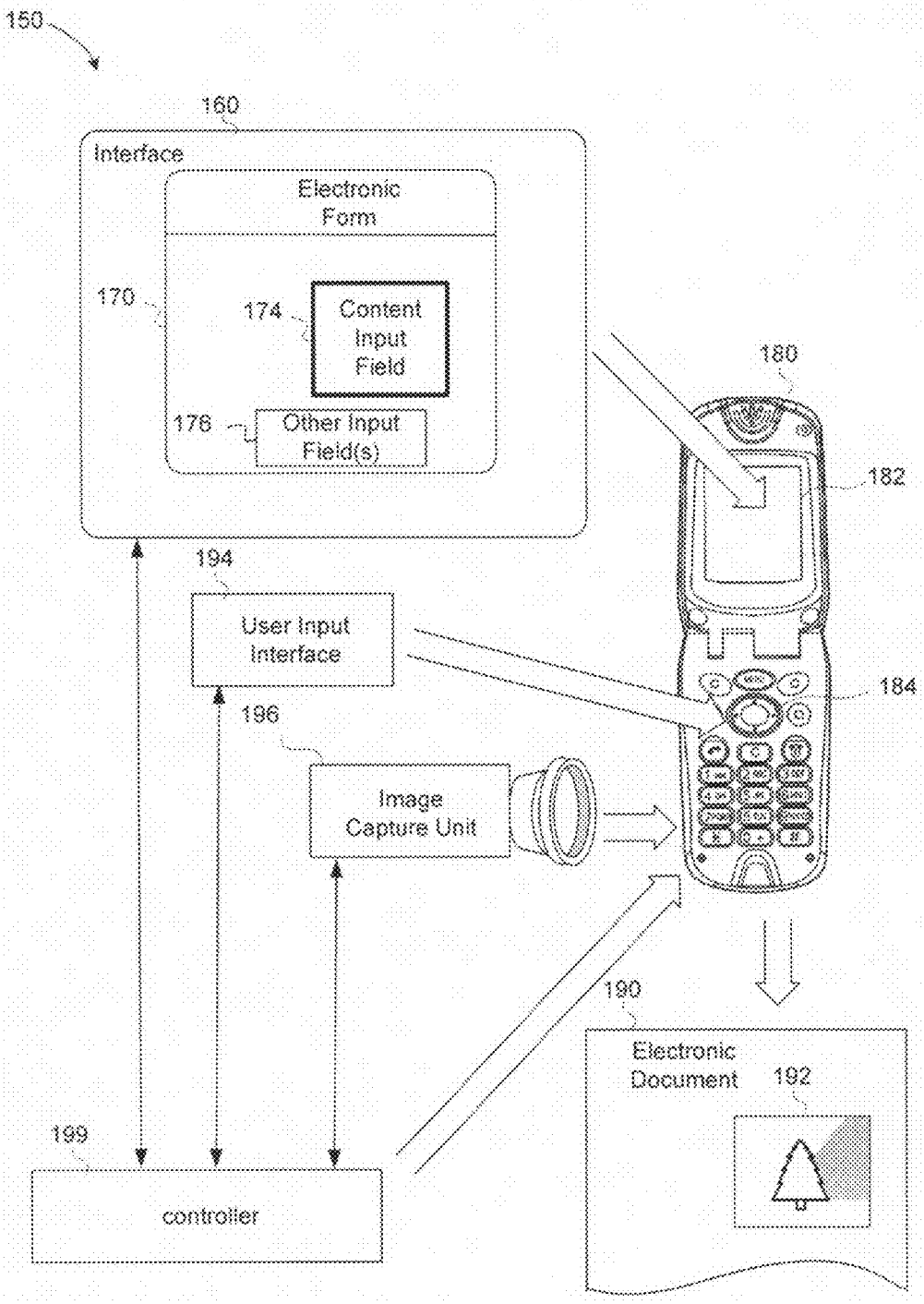
150
160
Interface
Electronic Form
170
174
Content Input Field
176
Other Input Field(s)
180
182
194
User Input Interface
184
196
Image Capture Unit
190
Electronic Document
192
199
controller

FIG. 1B

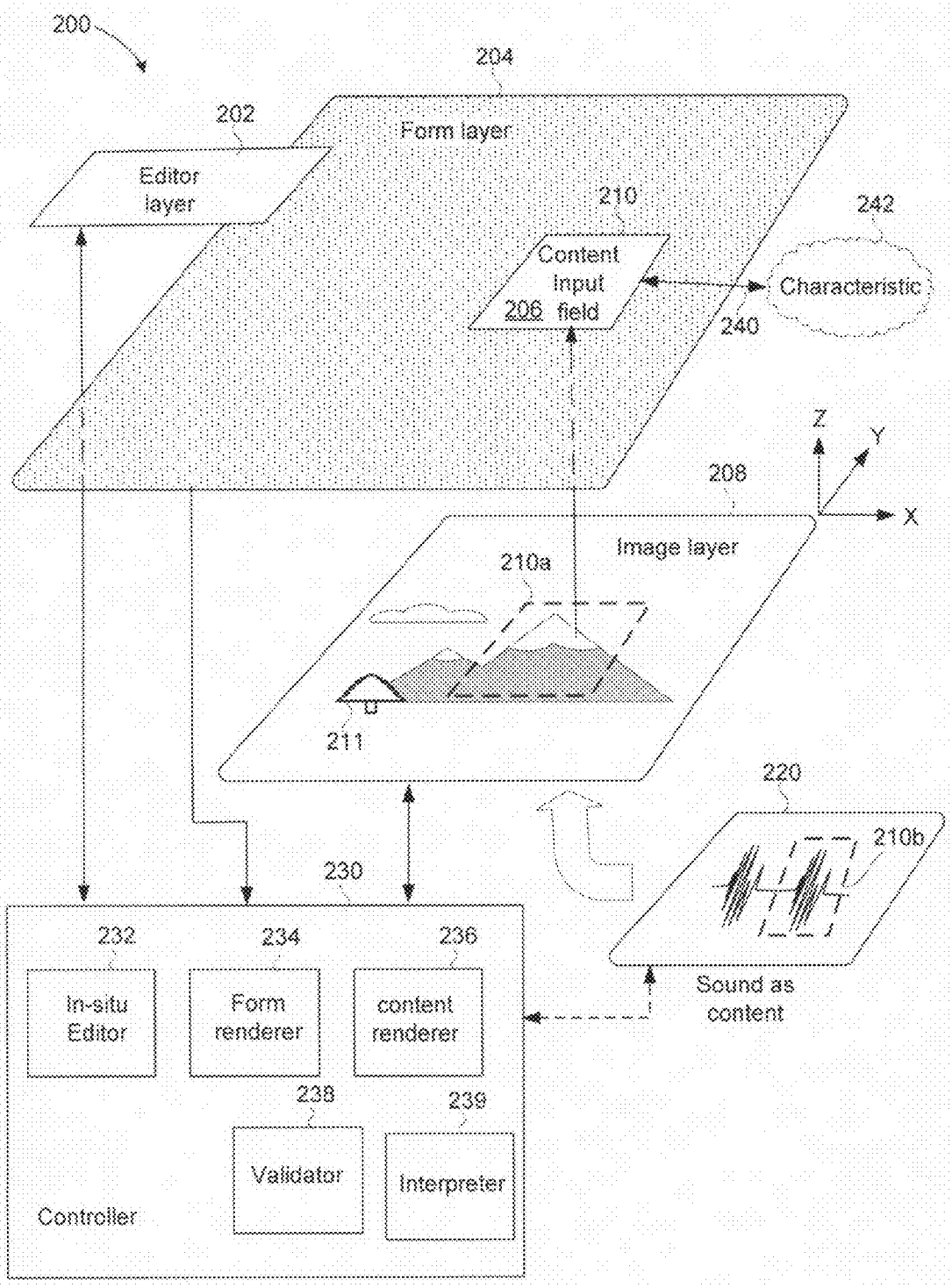
200
204
Form layer
202
Editor layer
210
Content input field
206
242
Characteristic
240
Z
Y
X
208
Image layer
210a
211
220
210b
Sound as content
230
232
In-situ Editor
234
Form renderer
236
content renderer
238
Validator
239
Interpreter
Controller

FIG. 2

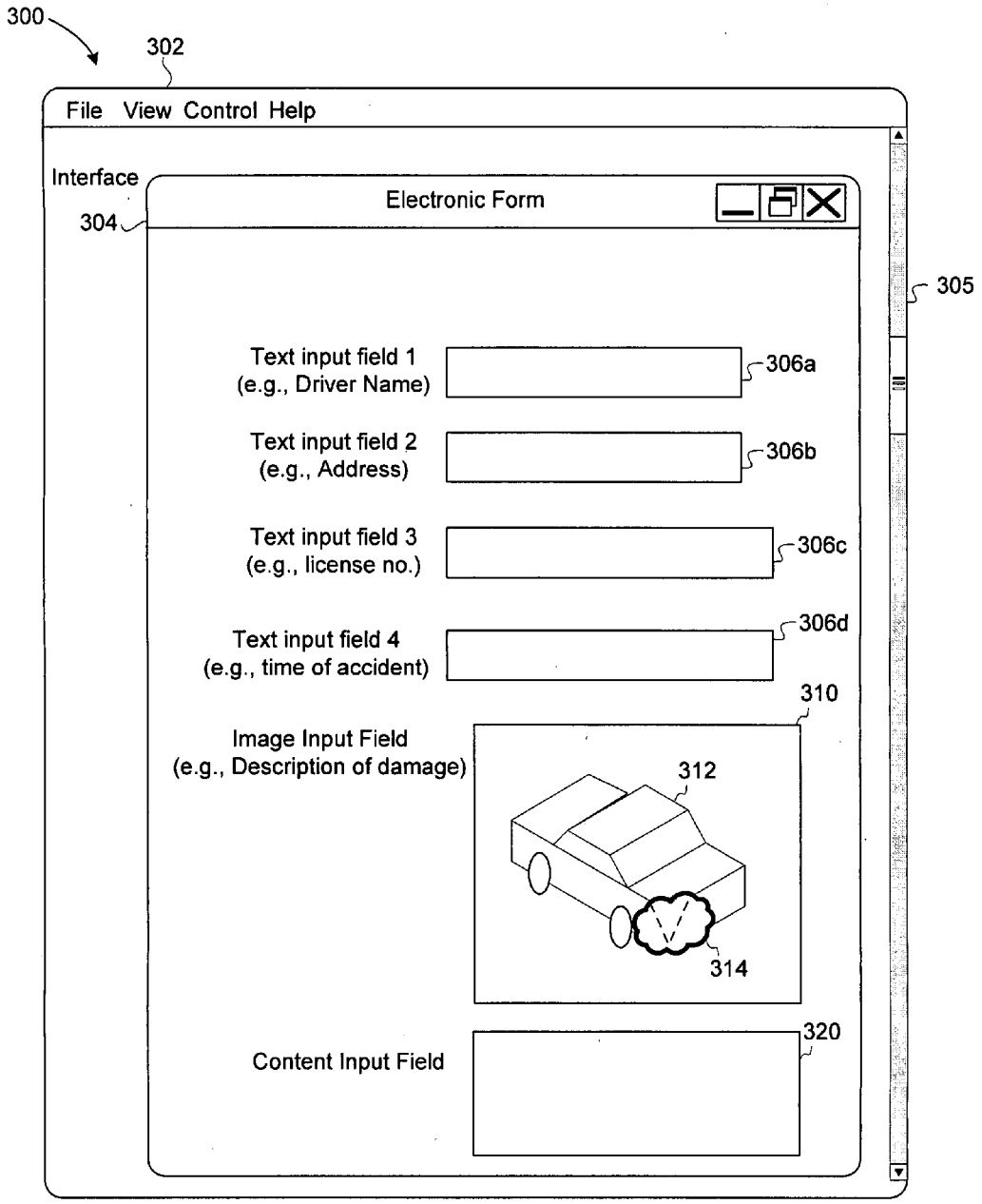
300
302
File View Control Help
Interface
304
Electronic Form
305
Text input field 1
(e.g., Driver Name)
306a
Text input field 2
(e.g., Address)
306b
Text input field 3
(e.g., license no.)
306c
Text input field 4
(e.g., time of accident)
306d
310
Image Input Field
(e.g., Description of damage)
312
314
320
Content Input Field

FIG. 3

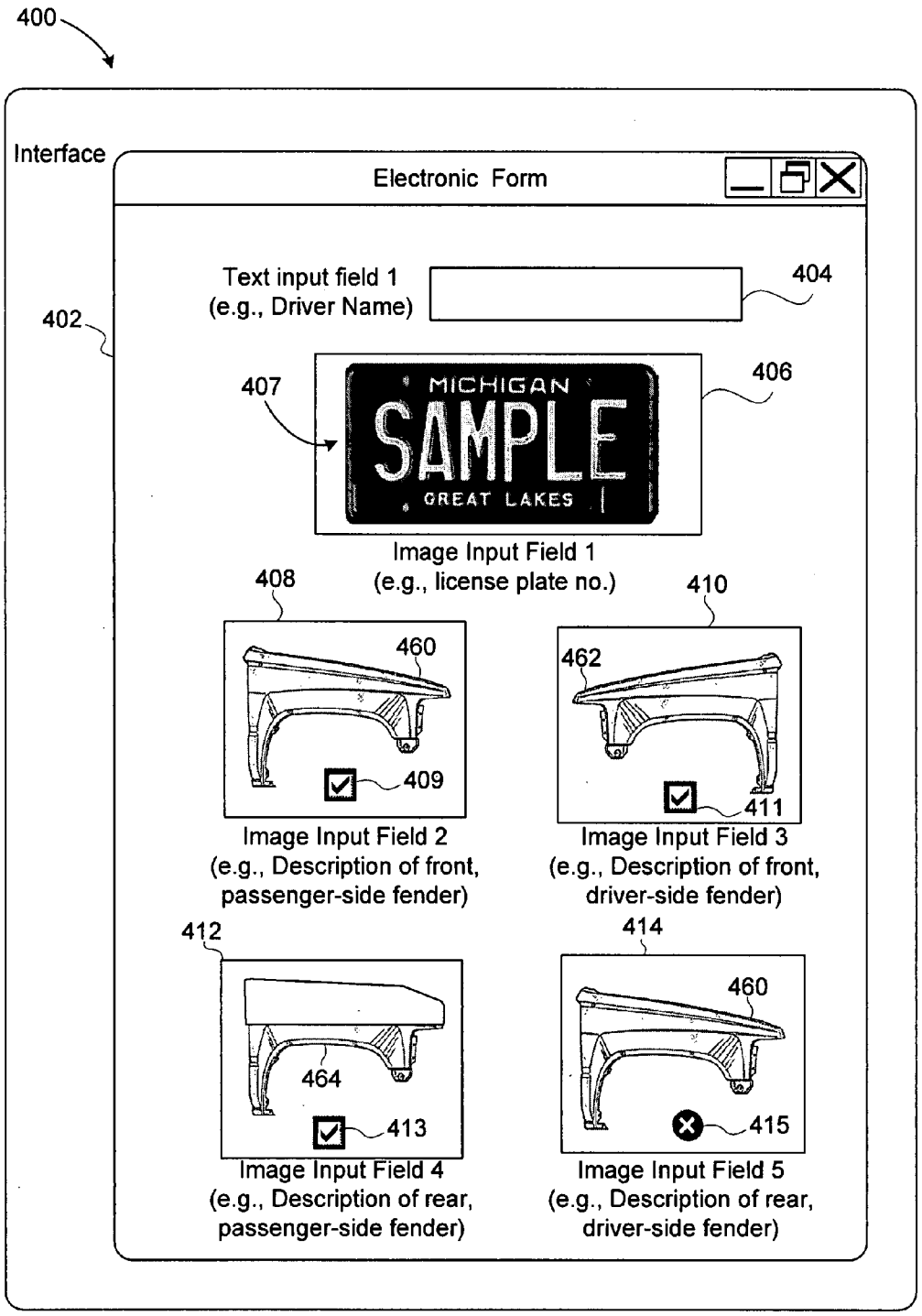
400
Interface
Electronic Form
Text input field 1
(e.g., Driver Name)
404
402
407
406
MICHIGAN
SAMPLE
GREAT LAKES
Image Input Field 1
(e.g., license plate no.)
408
410
460
462
409
411
Image Input Field 2
(e.g., Description of front, passenger-side fender)
Image Input Field 3
(e.g., Description of front, driver-side fender)
412
414
460
464
413
415
Image Input Field 4
(e.g., Description of rear, passenger-side fender)
Image Input Field 5
(e.g., Description of rear, driver-side fender)

FIG. 4

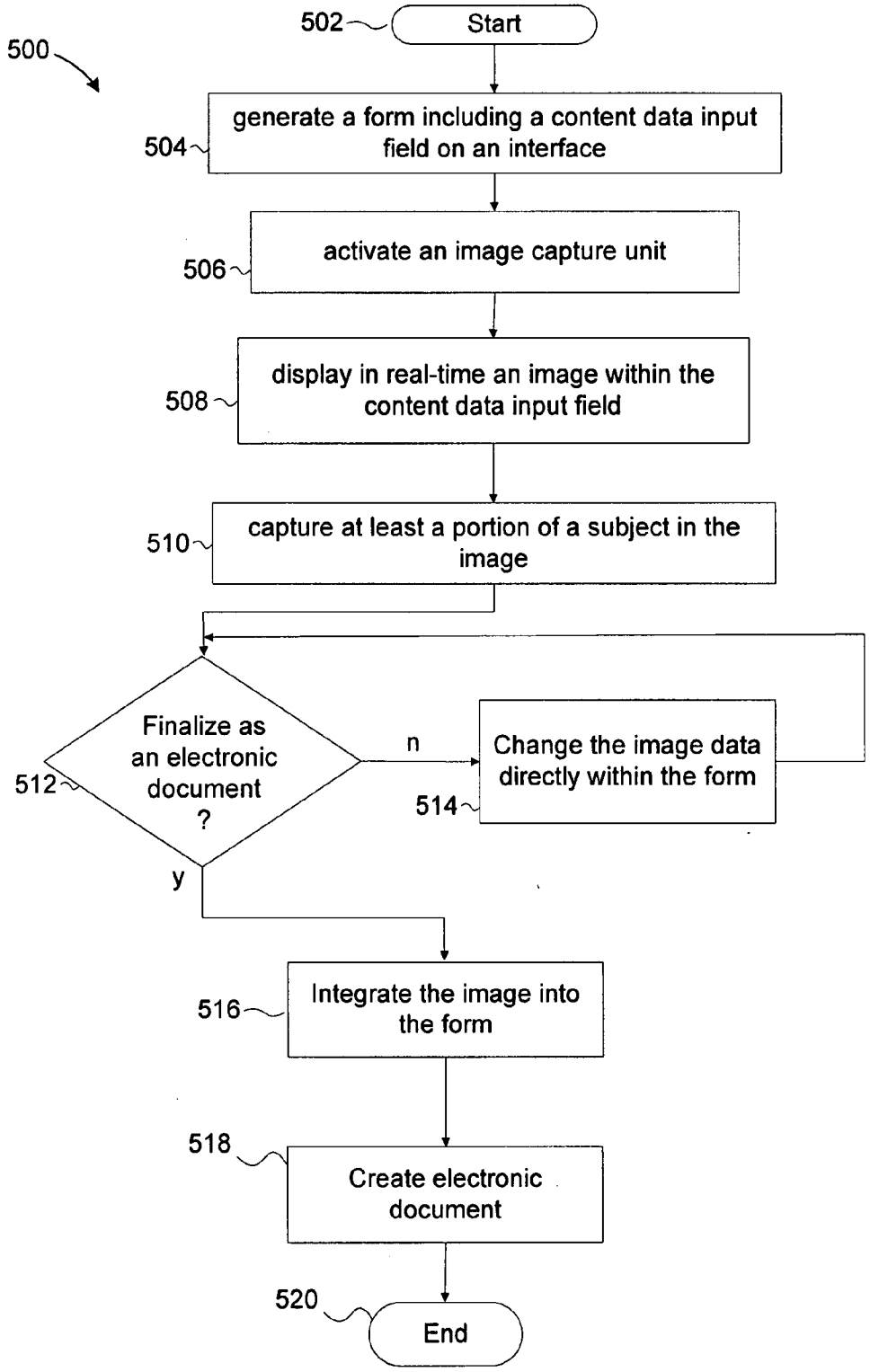
500
502
Start
504
generate a form including a content data input field on an interface
506
activate an image capture unit
508
display in real-time an image within the content data input field
510
capture at least a portion of a subject in the image
512
Finalize as an electronic document ?
n
514
Change the image data directly within the form
y
516
Integrate the image into the form
518
Create electronic document
520
End

FIG. 5

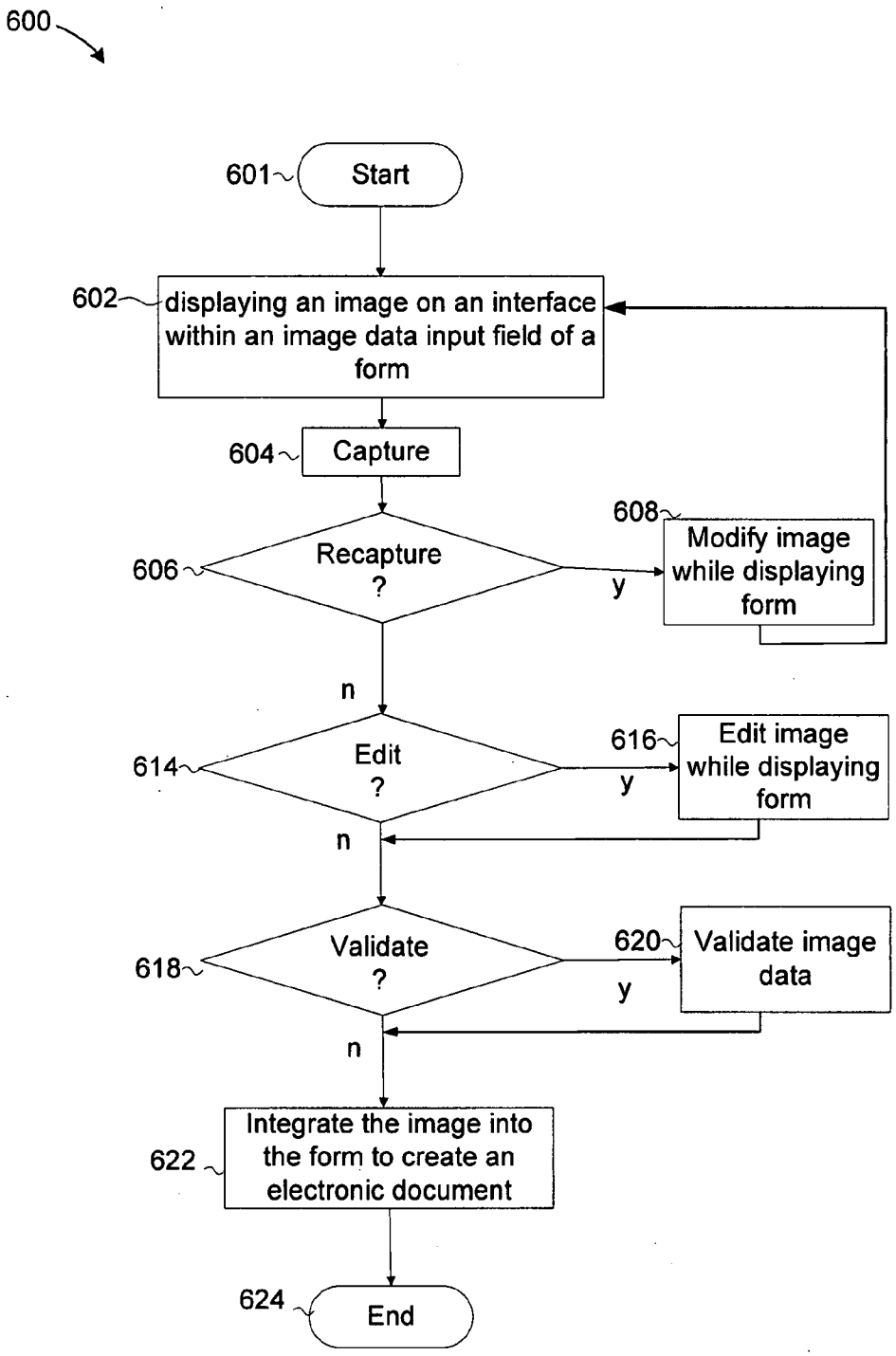
600
601
Start
602
displaying an image on an interface within an image data input field of a form
604
Capture
606
Recapture ?
y
608
Modify image while displaying form
n
614
Edit ?
y
616
Edit image while displaying form
n
618
Validate ?
y
620
Validate image data
n
622
Integrate the image into the form to create an electronic document
624
End

FIG. 6

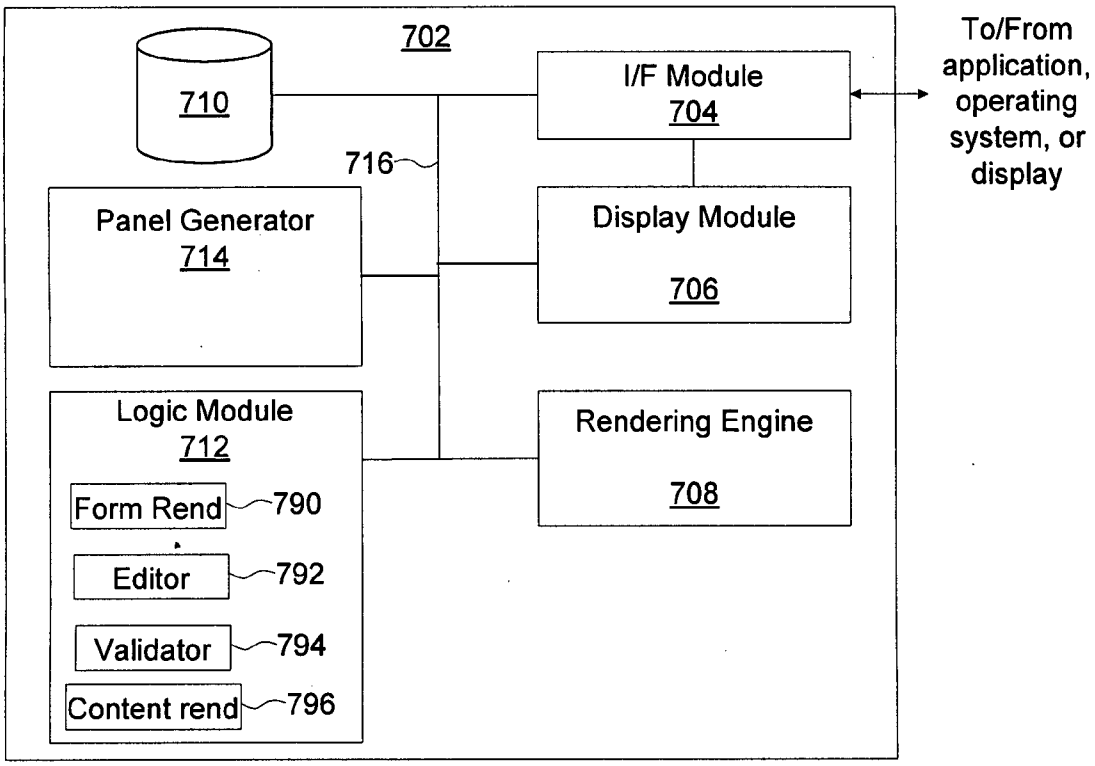
702
710
I/F Module
704
To/From application, operating system, or display
716
Panel Generator
714
Display Module
706
Logic Module
712
Rendering Engine
708
Form Rend
790
Editor
792
Validator
794
Content rend
796

FIG. 7A

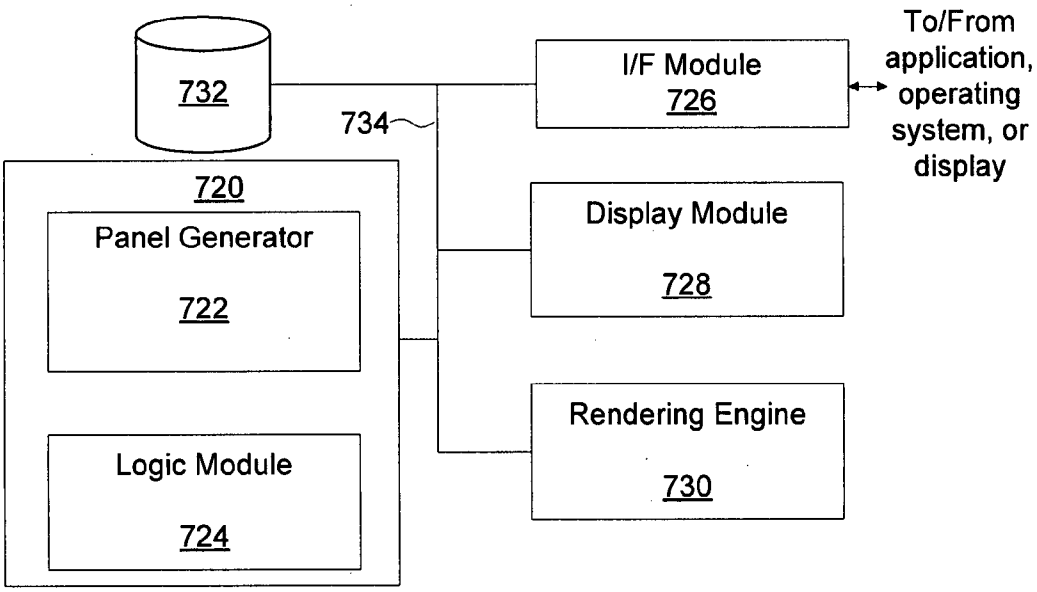
732
I/F Module
726
To/From application, operating system, or display
734
720
Panel Generator
722
Display Module
728
Rendering Engine
730
Logic Module
724

FIG. 7B

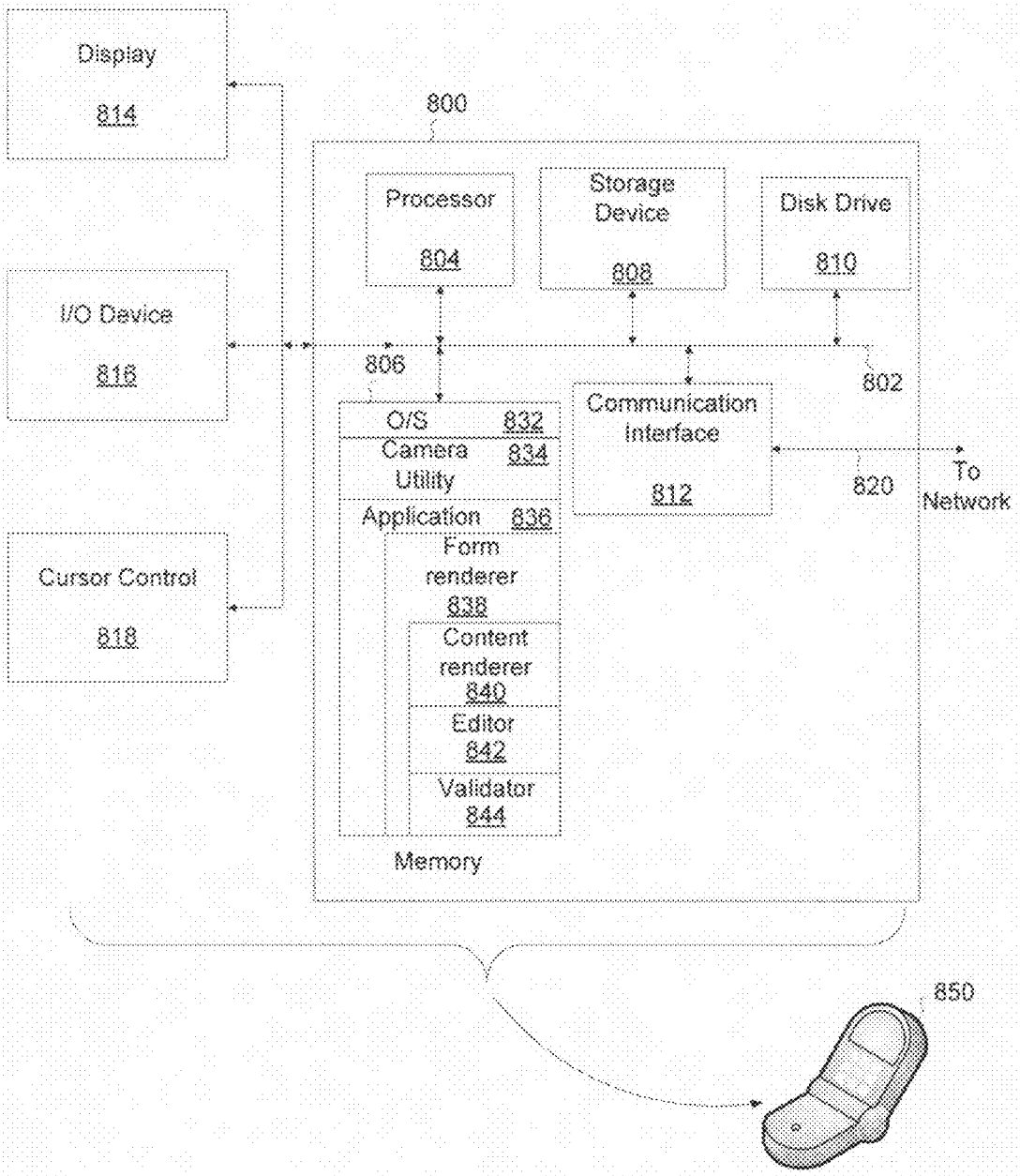
Display
814
800
Processor
804
Storage Device
808
Disk Drive
810
I/O Device
816
806
802
O/S 832
Camera Utility 834
Application 836
Form renderer 838
Content renderer 840
Editor 842
Validator 844
Memory
Communication Interface
812
820
To Network
Cursor Control
818
850

FIG. 8

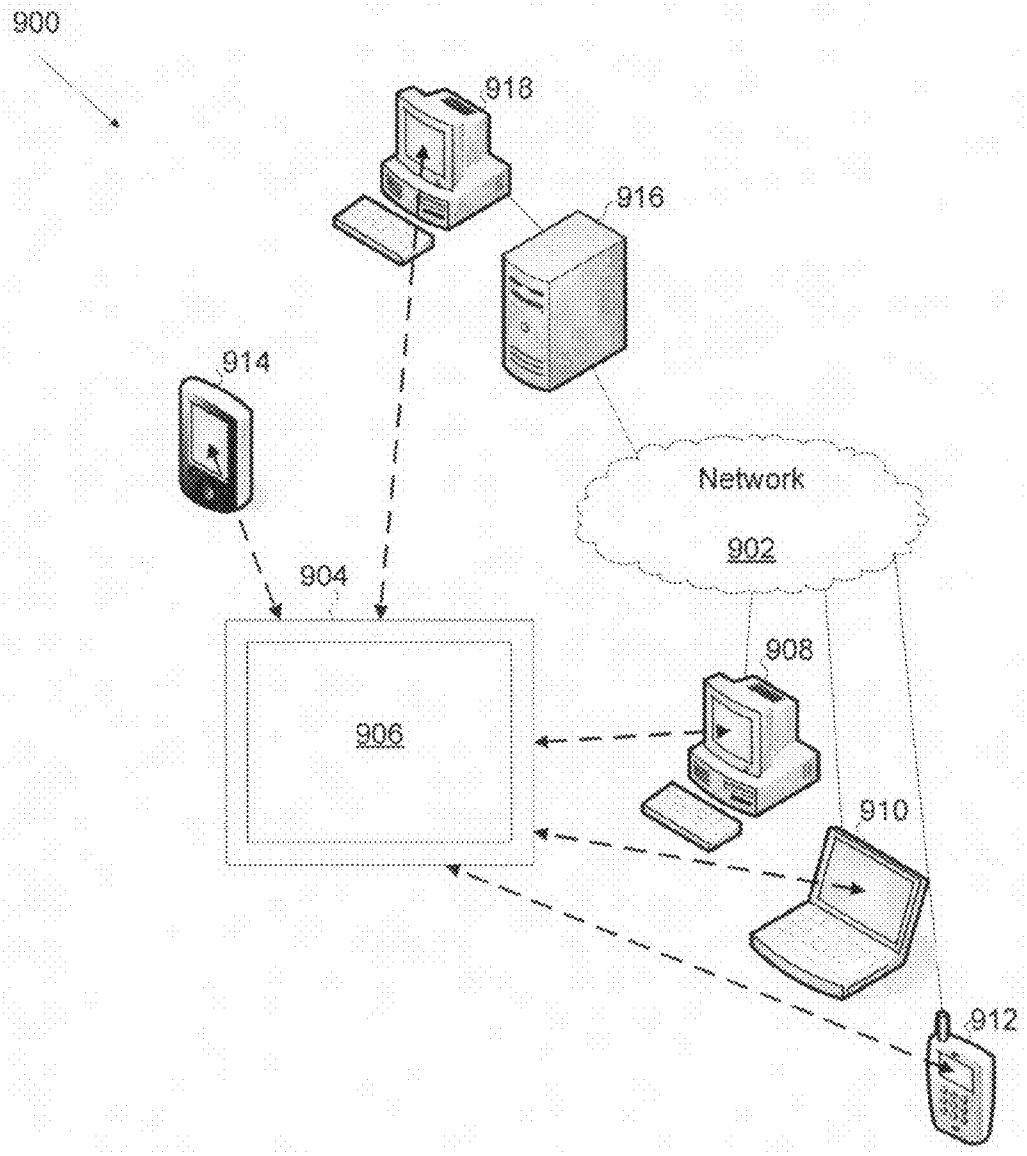

FIG. 9

USER INTERFACES AND METHODS TO CREATE ELECTRONIC DOCUMENTS WITH FORMS IMPLEMENTING CONTENT INPUT FIELDS

FIELD OF THE INVENTION

[0001] Embodiments of the invention relate generally to computing devices and systems, software, computer programs, applications, and user interfaces, and more particularly, to implementing content input fields in forms to create, for example, electronic documents.

BACKGROUND OF THE INVENTION

[0002] Improved communications networks and electronic display technologies have contributed to the adoption of electronic documents as a principle vehicle for exchanging and memorializing information. To create a conventional electronic document, users typically enter alpha-numeric characters—as text—into text input fields of an electronic form, such as an HTML-based or XML-based form. To create traditional electronic documents with pictures, however, users are usually required to import an image from a picture file. Browser-based applications, for example, can be used to create web-based electronic documents by prompting a user to search for a picture file in some sort of file management system (e.g., a hierarchy of folders). Once the user finds the picture file, the associated picture will be imported into the web-based electronic document. While functional, there are certain drawbacks to these techniques for creating electronic documents.

[0003] One drawback to importing images into electronic documents is that a user is typically required to perform multiple steps, and, thus, is burdened to know—a priori—the file name, and to expend efforts to search for the picture file. Another drawback is that users typically edit pictures using a separate application in a different window, thereby necessitating a transition from the presentation of the electronic form (e.g., in one window) to a picture editor (e.g., in another window). Often times, later-opened windows that include a picture editor obscure previously-opened windows that include the electronic document. While some current applications use pictures to create printed documents, such as name tags, these applications usually implement static templates that include unmodifiable graphics and text, and can require multiple windows to construct a printed document. A static template can typically be described as an electronic file having a preset, customized format and structure that is used as a starting point for a particular application so that the unmodifiable graphics and text of the template need not be recreated each time it is used. Further, multiple windows can obscure each other, especially when presented on relatively small interfaces, such as those on mobile phones and personal digital assistants ("PDAs").

[0004] It would be desirable to provide improved techniques, systems and devices that minimize one or more of the drawbacks associated with conventional techniques for creating electronic documents.

BRIEF DESCRIPTION OF THE FIGURES

[0005] The invention and its various embodiments are more fully appreciated in connection with the following detailed description taken in conjunction with the accompanying drawings, in which:

[0006] FIG. **1**A is a diagram of an interface implementing one or more content input fields to create electronic documents, according to at least one embodiment of the invention;

[0007] FIG. **1**B is another diagram of an interface implementing a content input field to create electronic documents with a hand-held device, according to at least one other embodiment of the invention;

[0008] FIG. **2** is a diagram of a controller for generating in multiple layers to create an interface implementing a content input field, according to at least one embodiment of the invention;

[0009] FIGS. **3** and **4** are examples of interfaces implementing one or more content input fields, according to various embodiments of the invention;

[0010] FIG. **5** is a flow diagram depicting one example of a method for creating an electronic document, according to one embodiment of the invention;

[0011] FIG. **6** is a flow diagram depicting another example of a method for creating an electronic document, according to another embodiment of the invention;

[0012] FIGS. **7**A and **7**B illustrate examples of panel presentation applications for implementing content input fields in electronic forms, according to various embodiments of the invention;

[0013] FIG. **8** illustrates an example of a computer system suitable for implementing content input fields in electronic forms for an interface, according to at least one embodiment of the invention; and

[0014] FIG. **9** illustrates an example of a panel presentation system for implementing content input fields in electronic forms.

[0015] Like reference numerals refer to corresponding parts throughout the several views of the drawings. Note that most of the reference numerals include one or two left-most digits that generally identify the figure that first introduces that reference number.

DETAILED DESCRIPTION

[0016] FIG. **1**A is a diagram **100** of an interface implementing one or more content input fields to create, for example, electronic documents, according to at least one embodiment of the invention. In the context of creating an electronic document **140**, interface **110** is configured to implement a content input field **124** as at least part of an electronic form **120**. Content input field **124** is configured to accept content for presentation coincident (or substantially coincident) with the presentation of electronic form **120** in interface **110**. In one embodiment, content input field **124** operates to sample content responsive to a user input, such as an input to select content input field **124**. As such, a user can preview the content in the context of electronic form **120** prior to creating electronic document **140**. Content input field **124**, therefore, enables a user to sample content and to optionally modify the content before finalizing electronic document **140** by, for example, integrating the modified content into electronic form **120**.

[0017] In view of the foregoing, content input field **124** enables a user to readily integrate content into electronic documents, thereby enhancing the functionality of electronic document **140**. Namely, content input field **124** facilitates the addition of content, such as audio, graphics, animation, video, still images, and/or interactivity, to supplement text input fields text (not shown) as well as other alpha-numeric character input fields. Further, content input field **124** enables a

user to preview content and modify the content in the context of electronic form **120**, without requiring, for example, a transition away (or interrupting the display thereof) to another panel. In addition, content input field **124** can be configured to directly present content, such as images, thereby obviating the necessity to import content from a content file, such as a file containing image data. In at least one embodiment, a user can edit the content in relation to (e.g., directly in or in association with) content input field **124**, thereby eliminating a requirement to access an editing application for purposes of editing the content.

[0018] To illustrate, consider the example in FIG. **1**A in which content input field **124** is configured to accept image data that represents one or more images. Note that the term, "image" can refer, in at least one embodiment, to a still image or a collection of images that constitute video. Content input field **124**, in this example, is an image data input field for electronic form **120** and is configured to accept imagery as content. As such, content input field **124**—in whole or in part—an be configured to present an image in real-time (or substantially in real-time) for an interface **110**. Next, consider that electronic form **120** is configured to accept user input via user input interface **144**. In one embodiment, selection of content input field **124** activates an image capture unit **102**, thereby facilitating entry of image data into content input field **124**. In this example, the image data represents a scene including a mountain range as a subject **108**. Once selected, content input field **124** can sample images in a continual fashion until, for example, user input interface **144** initiates the capture of at least a portion **130** of subject **108**. As shown, portion **130** represents a captured image within a boundary **122**. Thus, content input field **124** and electronic form **120** provide for a preview of electronic document **140** prior to finalization. In one embodiment, content input field **124** and electronic form **120** can be rendered in a single panel.

[0019] Further to the example shown, consider that a user wishes to modify the content data in association with content input field **124** by, for example, recapturing another portion **132** of subject **108**. The modified image can be displayed simultaneous (or substantially simultaneous) with electronic form **120**. To modify the content data (i.e., image data), user input interface **144** can be configured to dispense with image data for portion **130**, and to resample portions of subject **108** in real-time. In one embodiment, the modified image for a recaptured portion **132** is formed by translating either one or more images relative to boundary **122**, or vise versa. For instance, a user can move image capture unit **102** relative to a fixed position in space to translate the images relative to boundary **122**. In one embodiment, the user can translate portions of subject **108** to include a characteristic of a subject. For example, a user can translate from the image associated with portion **130** to the image associated with portion **132** to include a tree as a characteristic. In an alternative embodiment, boundary **122** can demarcate a time interval during which a portion of audio or a sound can be captured, if the content includes audio.

[0020] In one embodiment, interface **110** is configured to accept user inputs via user input interface **144** to edit the content, thereby forming edited content. In a specific embodiment, in-situ editor **146** can be configured to edit content data associated with content input field **124**. Continuing with the previous example, in-situ editor **146** can be implemented to perform image-related edits, such as cropping an image, performing an automatic color balance or brightness balance, performing gamma corrections, performing red-eye removal, and the like. Further, in-situ editor **146** can be configured to edit a captured image, as well as recaptured images, within content input field **124** to generate an edited image in the context of electronic form **120**. In various embodiments, in-situ editor **146** can be configured to edit captured images in portions **130** or **132** within content input field **124** without transitioning from electronic form **120** to implement an editor application, such as a stand-alone photo or video editing application. In one embodiment, electronic form **120** can present editor inputs **190** to select an image-related edit operation in the context of the form. In the example shown, editor inputs **190** can be presented as part of a panel that includes electronic form **120**. Once a captured image (or recaptured image) has been modified and/or edited, it can be finalized to form electronic document **140**. For example, portion **132** can be integrated into form **120** to create electronic document **140** with image **142**.

[0021] As used herein, the term "content input field" refers generally, at least in one embodiment, to a data field that accepts content in real-time (or substantially in real-time) in association with an electronic form, whereby the content associated with the content input field can be integrated with an electronic form to create an electronic document. As used herein, the term "content," at least in one embodiment, refers to information and/or material (e.g., multi-media information) presented within an interface in relation to, for example, a web site or a data entry application, such as a software product, for creating electronic documents. Content can also include the audio and/or visual presentation of text, such as an electronic document (e.g., a document in Portable Document Format ("PDF")), as well as audio, images, audio/video media, such as Flash presentations, text, and the like. As used herein, the term "modified content" refers generally, at least in one embodiment, to content that has been either recaptured after a previous capture, or edited, or both. As used herein, the term "sampling" refers generally, at least in one embodiment, to receiving digitized representations of content in real-time, such as visual imagery generated by an image capture unit or device, for purposes of capturing content (e.g., as video or a still image). As used herein, the term "capture" refers generally, at least in one embodiment, to the storage and/or recordation of data representing images, sound, or the like. For example, a captured image can be still image (e.g., a "freeze frame") representing a portion of a subject. As another example, a captured video or audio can be a portion of video or audio for a finite duration of time.

[0022] As used herein, the term "subject," can refer to, at least in one embodiment, a person or thing photographed, as well as a sound, voice or music recorded. As used herein, the term "panel," at least in one embodiment, can refer to displays, palettes, tabs, windows, screens, portions of an interface, and the like. As used herein, the term "electronic form," can refer, at least in one embodiment, to an interactive form having data input fields, including a content input field. In one embodiment, each of the data input fields is implemented in single panel. In other embodiments, the data input fields for the electronic form can be distributed over multiple panels. As used herein, the term "electronic document," can refer, at least in one embodiment, to any data files (e.g., other than computer programs or system files) that are intended to be used in their electronic form, without necessarily being printed, whereby computer networks and electronic display technologies can help facilitate their use and distribution. Note that an

electronic document can itself be defined as content, at least in one embodiment. As such, the electronic document can enable users to experience rich media content that is created with a content input field. As used herein, the term "integrating," as it relates to finalizing electronic documents can refer, at least in one embodiment, to generating an association between content and an electronic form, thereby combining the two for producing an electronic document. In some cases, the content is affixed as part of the electronic form, whereas in other cases, the content can be separable from the electronic document. When affixed, the content can be stored within a common data file as the electronic form, whereas separable content can be stored as a separate content file.

[0023] FIG. **1**B is a diagram **150** of an interface implementing a content input field to create electronic documents with a hand-held device, according to at least one other embodiment of the invention. Hand-held device **180** is configured to include an interface **182** for displaying content (or representations thereof) within a content input field, such as content input field **174**, and one or more user inputs **184**. Interface **182** can be used to create an electronic document **190** that includes an image **192** captured in the association with the content input field. In the example shown, interface **160** can be implemented as interface **182**. Interface **160** is configured to implement content input field **174** and one or more other input fields **176** for data entry, such as text input data and the like. Further, hand-held device **180** can include a controller **199** that is configured to coordinate the functionalities of interface **160**, user input interface **194**, and image capture unit **196**.

[0024] In at least one embodiment, hand-held device **180** is a mobile phone having relatively limited resources, such as a minimal interface **182** and user input interface **194**. Minimal interface **182** is typically smaller than displays used in laptop and desktop computing applications. Controller **199** can be configured to generate content input field **174** within a single panel, thereby obviating instances where multiple panels might obscure either the electronic form or the content, or both. User input interface **194** is usually limited to directional keys (e.g., up, down, left and/or right), such as user inputs **184**, for navigating minimal interface **182**. Controller **199** can also be configured to implement directional keys **184** to perform one or more operations with respect to the content in the context of interface **182**. For example, a user can use directional keys **184** to navigate electronic form **170** to select content input field **174**, which, in turn, causes content to be presented in association with content input field **174**. For instance, selection of content input field **174** can initiate streaming of digitized imagery from image capture unit **196** to content input field **174**. Directional keys **184** or other inputs in user input interface **194** can be implemented to capture, recapture, accept, reject, modify and/or edit the content. In various embodiments, controller **199** can be implemented in either hardware or software, or a combination thereof.

[0025] FIG. **2** is a diagram **200** of a controller for generating in multiple layers to create an interface implementing a content input field, according to at least one embodiment of the invention. In this example, controller **230** is configured to generate an image layer **208** and a form layer **204**, whereby both image layer **208** and form layer **204** can constitute, in whole or in part, an electronic form. In one embodiment, form layer **204** can include a transparent (or substantially transparent) content input field **206**, where the transparency of content input field **206** facilitates the presentation of at least a portion of the image within a boundary **210**. Further, controller **230** is configured to translate image layer **208** to translate the image relative to transparent content input field **206** and boundary **210**. For example, translating image layer **208** in the X, Y, and/or Z spatial dimensions can provide for capturing a portion of the image at one point in time, and can further provide for recapturing another portion of the image at an another point in time. An example of one such portion is portion **210***a*, which is defined by boundary **210**. Translating the image, as presented through transparent content input field **206**, thereby can operate to modify the image to form a modified image. In another embodiment, controller **230** can operate to translate form layer **204** relative to image layer **208**. In at least one embodiment, controller **230** can capture (e.g., store) image data constituting image layer **208**, while enabling a user to subsequently translate image layer **208** to position portion **210***a* with respect to content input field **206**.

[0026] In a specific embodiment, controller **230** can include a form renderer **234** configured to generate form layer **204**, and a content renderer **236** configured to present content in association with content input field **206**. In the example shown in FIG. **2**, content renderer **236** can generate image layer **208** for presenting an image as content. In other embodiments, content renderer **236** can generate an audio layer **220** to associate a sound, voice and/or audio data to content input field **206**. Controller **230** can be used to capture a portion **210***b* of a sound, voice and/or audio, responsive, for example, to a user input.

[0027] Optionally, controller **230** can include either an in-situ editor **232** or a validator **238**, or both. Further, controller **230** can optionally include interpreter **239**. In-situ editor **232** can be configured to edit the data representing captured content. In one embodiment, in-situ editor **232** can be configured to present an editor layer **202** as a content editor for editing the content. As such, editor layer **202** is configured to accept user input to edit the content in-situ to form edited content. For example, in-situ editor **232** facilitates the presentation of the edited content with respect to content input field **206** simultaneous to (or substantially simultaneous to) the presentation of form layer **204**. In some cases, in-situ editor **232** can, for example, crop, remove red eye, modify the contrast and color, and/or other enhance an image. In other cases, in-situ editor **232** can, for example, cut, copy, delete, splice, and mix sounds together, as well as modify the speed or pitch of a captured audio, as well as amplify, normalize, or equalize the audio.

[0028] Validator **238** can be configured to analyze the content to determine whether any captured content associated with content input field **206** matches or (likely matches) a predetermined metric. In one embodiment, content input field **206** can relate via an association **240** to a characteristic **242** of the content sought to be captured. If there is a match, then validator **238** is configured to present an indication (not shown) that content input field **206** includes characteristic **242**. For example, validator **238** can operate to determine whether portion **210***a* includes (or likely includes) a tree **211** as a characteristic of the subject. Thus, validator **238** can validate whether image data representing the image in portion **210***a* meet a first threshold indicative that the content in relation with content input field **206** includes characteristic **242**. The first threshold, for example, can represent an amount of green-colored pixels that are associated with image data in content input field **206**.

[0029] Interpreter **239** can be configured to interpret images and/or sounds (or portions there) to determine infor-

mation. In a specific embodiment, interpreter **239** is configured to test whether image data representing the image presented in content input field **206** meet a second threshold to determine whether the image data complies with one or more requirements. For example, the second threshold can represent a confidence level that the shape of tree **211** matches at least one of a number of predetermined shapes for trees. If there is a match, there can be a relatively high likelihood that tree **211** can be characterized as being a tree. In a specific embodiment, interpreter **239** can perform optical character recognition processes to translate optically-scanned bitmaps of text characters into character codes, such as ASCII. Thus, interpreter **239** can convert portions of an image in content input field **206** to determine one or more alpha-numeric characters. In another embodiment, interpreter **239** can perform speech recognition to translate audio into alpha-numeric characters. In various embodiments, interpreter **239** can interpret or convert content presented in association with content input field **206** into another form for implementation as an electronic document.

[0030] FIGS. **3** and **4** are examples of interfaces implementing one or more content input fields, according to various embodiments of the invention. In FIG. **3**, interface **300** can include a pull-down menu **302** (e.g., "File," "View," etc.), a scroll bar **305**, and an electronic form **304**. In at least one embodiment, electronic form **304** can include any number of text input fields, such as text input field ("**1**") **306***a*, text input field ("**2**") **306***b*, text input field ("**3**") **306***c*, and text input field ("**4**") **306***d*. These text input fields can be configured to accept, for example, alpha-numeric characters as input data. Electronic form **304** can also include one or more content input fields, such as an image input field **310** and a content input field **320**. In an exemplary application, consider that electronic form **304** is implemented as part of a computer program for processing the condition of an automobile, such as used by a car repair shop or a car rental agency.

[0031] Consider that electronic form **304** can be used to memorialize damage to an automobile as well as related information. For example, input field ("**1**") **306***a*, text input field ("**2**") **306***b*, text input field ("**3**") **306***c*, and text input field ("**4**") **306***d* can be configured to respectively accept data representing a driver name, an address, a license number, and a time of accident. A user of electronic form **304** can select **310** to sample an image of an automobile **312** as a subject. While viewing automobile **312** in the context of image input field **310**, the user can capture and recapture image data to optimally depict, for example, the extent of damage **314** associated with automobile **312**. Optionally, content input field **320** can be configured to accept any content as input, such as a sound. As such, when the user selects to accept content input field **320**, a sound can be captured. For example, the user can record the driver's verbal account of the accident. In some cases, once the user is satisfied, electronic form **304** can be used to produce an electronic document. In one embodiment, producing an electronic document includes, in whole or in part, saving data for electronic form **304** in association with other data that represents the captured image of automobile **312** and/or the captured sound corresponding to content input field **320**.

[0032] FIG. **4** depicts an interface **400** including an electronic form **402**, according to another embodiment of the invention. In this example, electronic form **402** includes an optional text input field ("**1**") **404**, and image input fields **406**, **408**, **410**, **412**, and **414**. To illustrate the functionality of electronic form **402**, consider that text input field ("**1**") **404**, and image input fields **406**, **408**, **410**, **412**, and **414** are configured to capture information about the condition of a rental car returned from a customer. Here, text input field ("**1**") **404** can be configured to accept user input, such as the driver's name. Image input field ("**1**") **406** can be configured to capture an image of a license plate **407** and license plate number.

[0033] A controller, which is not shown, can generate electronic form **402** and image input field **406**. In one embodiment, the controller can also be configured to test whether image data representing the image in image input field **406** meets a threshold indicative that the image data complies with one or more requirements. As used herein, the term "requirement," can refer to, at least in one embodiment, a threshold against which an interpreter analyzes content to interpret whether the content includes an identifiable characteristic. An example of such a requirement is that the captured license plate number in image input field **406** must match a predetermined license plate number for the returned automobile. Thus, the controller can be configured to identify the automobile. In a specific embodiment, an interpreter (not shown) can perform optical character recognition processes to determine a string of characters, such as "SAMPLE," and then determine whether SAMPLE has access to other information stored in relation to that license plate number. In this case, an interpreter can determine that each of the letters meet a requirement, or threshold, for identifying each of the letters as S, A, M, P, L, and E. A validator, in turn, can determine whether the license plate number (e.g., SAMPLE) is a characteristic of image input field **406** for which the validator can operate to validate.

[0034] Further to the preceding example, consider that each of image input fields **406**, **408**, **410**, **412**, and **414** is associated with at least one characteristic, such as the type of fender for an automobile. Specifically, image input field ("**2**") **408** can be associated with a front, passenger-side fender, image input field ("**3**") **410** can be associated with a front, driver-side fender, image input field ("**4**") **412** can be associated with a rear, passenger-side fender, and image input field ("**5**") **414** can be associated with a rear, driver-side fender. Next, consider that the interpreter is configured to interpret subjects presented in image input fields **406**, **408**, **410**, **412**, and **414** as one of a number of different fender types. Further, consider that a validator (not shown) can validate whether an interpreted fender type matches (or likely matches) the characteristic associated with a particular image input field.

[0035] In operation, a user might capture an image in image input field ("**2**") **408**, with the interpreter subsequently interpreting the image as including front, passenger-side fender **460**. Then, the validator can validate whether the captured image matches the characteristic corresponding to the image input field, and, in response to a positive match, the validator can generate a match indication **409** to signify that the captured image is in the correct image input field. Similarly, the interpreter can interpret the images in image input field ("**3**") **410** and image input field ("**4**") **412** as including front, driver-side fender **462** and rear, passenger-side fender **464**, respectively. The validator then can generate match indications **411** and **413** to indicate positive matches to the corresponding characteristics. But note that if the user captures front, passenger-side fender **460** in image input field ("**5**") **414**, which is associated with rear, driver-side fenders, then the validator can generate a no-match indication **415** that signifies that there is mismatch to the corresponding characteristic. The

user then can recapture the correct subject for image input field ("**5**") **414**. Thereafter, an electronic document can be finalized.

[0036] FIG. **5** is a flow diagram depicting one example of a method for creating an electronic document, according to one embodiment of the invention. As shown, flow **500** begins at **502**, with an interface, a processor, an application and/or logic, generating a form including a content input field at **504**. Flow **500** detects the activation of a content capture device, such as an image capture unit, at **506**. At **508**, an image is displayed in real-time (or substantially in real-time) within or in association the content input field. At least a portion of the content (e.g., image) is captured at **510**. A determination is made at **512** whether to finalize the form. If the form is yet to be finalized, flow **500** continues to **514** at which the content data (e.g., "image data") representing the captured image can be changed, or modified. But if the form is to be finalized into an electronic document, then flow **500** continues to **516**. Here, captured content or recaptured content can be integrated into the form to create an electronic document at **518**. Flow **500** terminates at **520**.

[0037] FIG. **6** is a flow diagram depicting another example of a method for creating an electronic document, according to another embodiment of the invention. As shown, flow **600** begins at **601**, with an interface, a processor, an application and/or logic, displaying an image in an interface at **602** in connection with an image data input field for an electronic form. Flow **600** provides for the capture of the image at **604**. A determination is made at **606** whether to recapture an image. If so, then flow **600** continues to **608** at which the image can be modified in the context of the form (e.g., within and/or while a form is concurrently displayed). But if there is to be no recapture, then flow **600** continues to **614**. A determination is made at **614** whether to edit an image. If so, then flow **600** continues to **616** at which the image can be edited in the context of the form. But if there is to be no editing performed, then flow **600** continues to **618**. A determination is made at **618** whether to validate an image. If so, then flow **600** continues to **620** at which the image and/or its image data can be validated. But if there is to be no validation, then flow **600** continues to **622** at which the image is integrated into the form to create an electronic document. Flow **600** terminates at **624**.

[0038] FIG. **7**A illustrates an example of a panel presentation application for implementing content input fields in electronic forms, according to various embodiments of the invention. In at least one embodiment, an electronic form including a content input field can be implemented in a panel, such as a single panel. Here, application **702** includes interface ("I/F") module **704**, display module **706**, rendering engine **708**, repository **710**, logic module **712**, panel generator **714**, and data bus **716**. In some examples, the number and type of elements shown and described may be varied and are not limited to the descriptions provided. In some examples, the above-described elements can be implemented as part, component, or module of application **702**. As an example, application **702** can be implemented to include either a web-based form or an electronic form as part of a software product, and can have content input field functionality as described herein. Logic module **712** can be implemented as software, hardware, circuitry, or a combination thereof to implement control logic for the described techniques for panel presentation.

[0039] In some examples, logic module **712** can be configured to control panel generator **714** to form electronic forms and/or content input fields. Rendering engine **708** can be configured to operate as a layout engine for web pages, for example, to manipulate both content (e.g., as expressed in or including HTML, XML, image files, etc.) and formatting information (e.g., as expressed in or including CSS, XSL, etc.) for rendering the data or information as one or more panels on interface **906** (FIG. **9**). Interface module **704** can exchange panel presentation data, including content data, image data, audio data, as well as other data, between application **702** and another application (e.g., a host, client, web services-based, distributed (i.e., enterprise), application programming interface ("API"), operating system, program, procedure or others) that can use data and information generated from panel generator **714** to render presented panels on a display screen. In other examples, the above-described techniques and elements can be varied in design, implementation, and function and are not limited to the descriptions provided.

[0040] In one embodiment, logic module **712** can include a form renderer module ("form rend") **790**, an editor module ("Editor") **792**, a validator module ("validator") **794**, and a content renderer module ("content rend") **796**. Renderer module **790** is configured to provide data, for example, to panel generator **714** for generating an electronic form. The data can include form layer data for generating form layer **204** (FIG. **2**). Editor module **792** is configured to manage the editing of content data. Validator module **794** is configured to validate whether content includes a characteristic associated with a content input field. Content renderer module **796** is configured to generate a content layer, such as an image layer **208** (FIG. **2**). Thus, renderer module **796** can provide image layer data to generate, in whole or in part, an image layer for presenting content in real-time with respect to the content input field.

[0041] FIG. **7**B illustrates an alternative example of a panel presentation application for implementing content input fields in electronic forms, according to one embodiment of the invention. Here, application **720** includes panel generator **722** and logic module **724**, which can have equivalent functionality as **712** of FIG. **7**A. Further, application **720** is shown in data communication with interface ("I/F") module **726**, display module **728**, rendering engine **730**, and repository **732**. Data bus **734** can be configured to send or receive data among application **720**, I/F module **726**, display module **728**, rendering engine **730**, and repository **732**. In other examples, more, fewer or different elements can be used and implemented without limitation to the examples provided above.

[0042] In some examples, logic module **724** and panel generator **722** can be implemented as part of application **720**, which can be implemented separately from other functional components or modules, such as interface module **726**, display module **728**, rendering module **730**, and repository **732**. Data bus **734** can be implemented to communicate data over a given port between application **720** and interface module **726**, display module **728**, rendering module **730**, and repository **732**. In other words, application **720** can be implemented as a standalone application or as a component (i.e., module) of another application. Data or information (e.g., content, characteristics, captured content, recaptured content, edited content, text data, and the like) associated with a panel can be stored in repository **732**, which can be implemented using a database, data store, data warehouse, or any other type of data repository or structure. In other examples, more, fewer, or different modules can be used to implement the described techniques for panel presentation and are not limited to those provided.

[0043] FIG. **8** illustrates an exemplary computer system suitable for implementing content input fields in electronic forms for an interface, according to at least one embodiment of the invention. In some examples, computer system **800** can be used to implement computer programs, applications, methods, processes, or other software to perform the above-described techniques and to realize the structures described herein. Computer system **800** includes a bus **802** or other communication mechanism for communicating information, which interconnects subsystems and devices, such as processor **804**, system memory ("memory") **806**, storage device **808** (e.g., ROM), disk drive **810** (e.g., magnetic or optical), communication interface **812** (e.g., modem or Ethernet card), display **814** (e.g., CRT or LCD), input device **816** (e.g., keyboard), and cursor control **818** (e.g., mouse or trackball). In one embodiment, cursor control **818** can select a content input field and input device **816** can include a user input interface, such as a direction key, whereby both cursor control **818** and input device **816** can collaborate to capture and modify content.

[0044] According to some examples, computer system **800** performs specific operations in which processor **804** executes one or more sequences of one or more instructions stored in system memory **806**. Such instructions can be read into system memory **806** from another computer readable medium, such as static storage device **808** or disk drive **810**. In some examples, hard-wired circuitry can be used in place of or in combination with software instructions for implementation. In the example shown, system memory **806** includes modules of executable instructions for implementing an operation system ("O/S") **832**, a camera utility module **834**, and an application **836** for creating electronic documents. Camera utility module **834** includes instructions for integrating the functionality of an image capture unit or device (e.g., such as an I/O device **816**) with an electronic form and its content input field. Camera utility module **834** can monitor selection of a content input field and can activate, for example, a camera to initiate streaming of image data into the content input field. Application **836** includes additional instructions in the following modules: form renderer **838**, content renderer **840**, editor **842**, and/or validator **844**. In one embodiment, system memory **806** can be configured to stored data for form layer **204** (FIG. **2**) and/or image layer **208** (FIG. **2**) for translation with respect to each other.

[0045] The term "computer readable medium" refers, at least in one embodiment, to any medium that participates in providing instructions to processor **804** for execution. Such a medium can take many forms, including but not limited to, non-volatile media, volatile media, and transmission media. Non-volatile media includes, for example, optical or magnetic disks, such as disk drive **810**. Volatile media includes dynamic memory, such as system memory **806**. Transmission media includes coaxial cables, copper wire, and fiber optics, including wires that comprise bus **802**. Transmission media can also take the form of acoustic or light waves, such as those generated during radio wave and infrared data communications.

[0046] Common forms of computer readable media includes, for example, floppy disk, flexible disk, hard disk, magnetic tape, any other magnetic medium, CD-ROM, any other optical medium, punch cards, paper tape, any other physical medium with patterns of holes, RAM, PROM, EPROM, FLASH-EPROM, any other memory chip or cartridge, carrier wave, or any other medium from which a computer can read.

[0047] In some examples, execution of the sequences of instructions can be performed by a single computer system **800**. According to some examples, two or more computer systems **800** coupled by communication link **820** (e.g., LAN, PSTN, or wireless network) can perform the sequence of instructions in coordination with one another. Computer system **800** can transmit and receive messages, data, and instructions, including program, i.e., application code, through communication link **820** and communication interface **812**. Received program code can be executed by processor **804** as it is received, and/or stored in disk drive **810**, or other non-volatile storage for later execution. In one embodiment, system **800** is implemented as a hand-held device, such as a mobile phone **850**. But in other embodiments, system **800** can be implemented as a personal computer (i.e., a desk top computer) or any other computing device.

[0048] FIG. **9** illustrates an example of a panel presentation system for implementing content input fields in electronic forms. Here, system **900** includes network **902**, display environment **904**, interface **906**, which can be presented on devices such as computer **908**, notebook computer ("notebook" or "laptop") **910**, smart phone **912**, personal digital assistant ("PDA") **914**, server **916**, and administrator computer **918**. In other examples, the number and type of devices can be varied and are not limited to those shown and described.

[0049] In some examples, one or more panels for creating electronic documents can be presented on interface **906**, which can be an interface for an application such as a web browsing program, Internet content portal, client or desktop application for any purpose. Panels can be used to provide additional or supplemental information that can be contextually relevant to another panel presented in interface **906**. Computer **908**, notebook computer ("notebook" or "laptop") **910**, smart phone **912**, personal digital assistant ("PDA") **914**, server **916**, and administrator computer **918** can provide content data for rendering content as well as other data, which can be implemented to generate, for example, an electronic form and content input field in interface **906**. In some cases, an operating system installed on computer **908** can communicate (i.e., via an application programming interface ("API")) content data and/or other electronic form-related data to another application installed on computer **908** to render (i.e., interpreting data and information to draw or display the content in an interface) one or more panels presented in interface **906**. In some examples, different types of panels can be rendered in interface **906**. In one embodiment, interface **906** can include any number and/or any type of display environments, such as CRT and LCD displays. Note that the above-described system and elements can be varied and are not limited to the descriptions or examples provided.

[0050] In at least some of the embodiments of the invention, the structures and/or functions of any of the above-described interfaces and panels can be implemented in software, hardware, firmware, circuitry, or a combination thereof. Note that the structures and constituent elements shown in FIGS. **7**A to **9**, as well as their functionality, can be aggregated with one or more other structures or elements. Alternatively, the elements and their functionality can be subdivided into constituent sub-elements, if any. As software, the above-described described techniques can be implemented using various types

of programming or formatting languages, frameworks, syntax, applications, protocols, objects, or techniques, including C, Objective C, C++, C#, Flex™, Fireworks®, Java™, Javascript™, AJAX, COBOL, Fortran, ADA, XML, HTML, DHTML, XHTML, HTTP, XMPP, and others. These can be varied and are not limited to the examples or descriptions provided.

[0051] The foregoing description, for purposes of explanation, used specific nomenclature to provide a thorough understanding of the invention. However, it will be apparent to one skilled in the art that specific details are not required in order to practice the invention. In fact, this description should not be read to limit any feature or aspect of the present invention to any embodiment; rather features and aspects of one embodiment can readily be interchanged with other embodiments.

[0052] Thus, the foregoing descriptions of specific embodiments of the invention are presented for purposes of illustration and description. They are not intended to be exhaustive or to limit the invention to the precise forms disclosed; many alternatives, modifications, equivalents, and variations are possible in view of the above teachings. For the purpose of clarity, technical material that is known in the technical fields related to the embodiments has not been described in detail to avoid unnecessarily obscuring the description. Thus, the various embodiments can be modified within the scope and equivalents of the appended claims. Further, the embodiments were chosen and described in order to best explain the principles of the invention and its practical applications; they thereby enable others skilled in the art to best utilize the invention and various embodiments with various modifications as are suited to the particular use contemplated. Notably, not every benefit described herein need be realized by each embodiment of the present invention; rather any specific embodiment can provide one or more of the advantages discussed above. In the claims, elements and/or operations do not imply any particular order of operation, unless explicitly stated in the claims. It is intended that the following claims and their equivalents define the scope of the invention.

1. A method, comprising:

displaying, on a display of an electronic device, an electronic form comprising one or more text input fields simultaneously displayed with a content capture input field;

in response to receiving a selection of the content capture input field in the electronic form, activating a content capture unit of the electronic device comprising a camera or microphone;

presenting, within the selected content capture input field, a representation of content captured by the content capture unit of the electronic device; and

integrating the representation of content into the electronic form such that the electronic form includes a form layer and a content layer, the form layer configured to present at least a portion of the representation of content included in the content layer, and the content layer being configured to translate the representation of content relative to the content input field.

2. The method of claim **1**, further comprising:

modifying the representation of content captured by the content capture unit prior to presenting the representation of content in the selected content input field.

3. The method of claim **2**, wherein the representation of content includes an image, and the method further comprises translating the image relative to a boundary of the selected content input field to include a characteristic of a subject of the image in the selected content input field.

4. The method of claim **1**, wherein integrating the representation of content excludes importing a file.

5. (canceled)

6. The method of claim **1**, wherein the content capture unit is an image capture unit.

7. The method of claim **1**, wherein the representation of content includes an image, and the integrating comprises:

capturing at least a portion of a subject in the image within the selected content input field.

8. The method of claim **7**, further comprising generating a preview of an electronic document file that includes the representation of the captured image.

9. The method of claim **8**, further comprising:

editing the captured image within the selected content input field; and generating an edited image.

10. The method of claim **8**, further comprising editing the captured image within the selected content input field without transitioning from the electronic form to an editor application.

11. The method of claim **1**, further comprising validating whether content data representing the representation of content meets a first threshold, wherein the validating indicates whether the content data includes a specified characteristic.

12. The method of claim **11**, further comprising testing whether content data representing the representation of content meets a second threshold, wherein the validating indicates whether the content data complies with one or more requirements.

13. The method of claim **1**, further comprising associating the selected content input field with at least a portion of the representation of content.

14. The method of claim **13**, further comprising presenting information, in an interface, that indicates the association between the portion of the representation of content and the selected content input field.

15. The method of claim **13**, further comprising validating whether the portion of the representation of content includes a specified characteristic.

16-18. (canceled)

19. The method of claim **1**, wherein the selected content input field is substantially transparent, and wherein the integrating further comprises:

translating the representation of content during presentation of the representation of content within the substantially transparent selected content input field.

20. The method of claim **1**, further comprising presenting a content editor for editing the representation of content, wherein the content editor is configured to accept user input to edit the representation of content in-situ in the electronic form.

21. The method of claim **20**, wherein presenting the content editor further comprises presenting the edited content in association with the selected content input field while presenting the electronic form in an interface.

22. The method of claim **16**, further comprising previewing the representation of content, wherein the previewing comprises:

presenting either an image or sound, or both, in the content capture input field.

23. An electronic device, comprising:

a content capture unit configured to capture digitized image or audio content;

a memory configured to store instructions executable to display, on a display of the electronic device, an electronic form, wherein the electronic form comprises one or more text input fields simultaneously displayed with a content capture input field;

a processor coupled to the memory and configured to:

in response to receiving a selection of the content capture input field in the electronic form, activate the content capture unit of the electronic device;

present a representation of content captured by the content capture unit within the selected content capture input field; and

integrate the representation of content into the electronic form such that the electronic form includes a form layer and a content layer, the form layer configured to present at least a portion of the representation of content included in the content layer, and the content layer being configured to translate the representation of content relative to the content input field.

24. The electronic device of claim **23**, wherein the processor is further configured to validate whether the representation of content includes a specified characteristic.

25. (canceled)

26. (canceled)

27. A computer readable storage medium, excluding signals per se, comprising executable instructions to:

display, on a display of an electronic device, an electronic form comprising one or more text input fields simultaneously displayed with a content capture input field;

in response to receiving a selection of the content capture input field, activate a content capture unit of the electronic device comprising a camera or microphone;

present a representation of content captured by the content capture unit within the selected content capture input field; and

integrate the representation of content into the electronic form such that the electronic form includes a form layer and a content layer, the form layer configured to present at least a portion of the representation of content included in the content layer, and the content layer being configured to translate the representation of content relative to the content input field.

28. (canceled)

29. The computer readable storage medium of claim **27**, further comprising executable instructions to associate one or more additional content capture input fields with the content capture input field.

* * * * *