US008111326B1

(12) **United States Patent**
Talwar

(10) **Patent No.: US 8,111,326 B1**
(45) **Date of Patent: Feb. 7, 2012**

(54) **POST-CAPTURE GENERATION OF SYNCHRONIZATION POINTS FOR AUDIO TO SYNCHRONIZE VIDEO PORTIONS CAPTURED AT MULTIPLE CAMERAS**

(75) Inventor: **Abhishek Talwar**, New Delhi (IN)

(73) Assignee: **Adobe Systems Incorporated**, San Jose, CA (US)

(*) Notice: Subject to any disclaimer, the term of this patent is extended or adjusted under 35 U.S.C. 154(b) by 1294 days.

(21) Appl. No.: **11/805,830**

(22) Filed: **May 23, 2007**

(51) **Int. Cl.**

H04N 5/04	(2006.01)
H04N 7/14	(2006.01)
H04N 7/20	(2006.01)
H04N 5/932	(2006.01)
H04N 5/93	(2006.01)
G06F 1/12	(2006.01)
G01C 21/00	(2006.01)

(52) **U.S. Cl.** **348/500**; 348/14.08; 348/423.1; 725/67; 713/400; 701/215; 386/201; 386/203; 386/282

(58) **Field of Classification Search** ..... None
See application file for complete search history.

(56) **References Cited**

U.S. PATENT DOCUMENTS

5,479,351	A	12/1995	Woo et al.	
6,430,361	B2	8/2002	Lee	
6,839,067	B2	1/2005	Liu et al.	
6,972,787	B1	12/2005	Allen et al.	
6,993,246	B1	1/2006	Pan et al.	
7,015,954	B1	3/2006	Foote et al.	
7,024,575	B2	4/2006	Lienhart et al.	
7,057,663	B1 *	6/2006	Lee	348/423.1
7,126,630	B1	10/2006	Lee et al.	
2001/0036356	A1	11/2001	Weaver et al.	
2002/0018124	A1	2/2002	Mottur et al.	
2005/0024488	A1	2/2005	Borg	
2005/0206720	A1 *	9/2005	Cheatle et al.	348/14.08
2006/0002690	A1	1/2006	Stwertka et al.	
2006/0248559	A1	11/2006	Michener et al.	
2007/0035632	A1	2/2007	Silvernail et al.	

FOREIGN PATENT DOCUMENTS

EP	1199892	4/2002

* cited by examiner

Primary Examiner — Jefferey Harold
Assistant Examiner — Sean Haiem
(74) *Attorney, Agent, or Firm* — Robert C. Kowert; Meyertons, Hood, Kivlin, Kowert & Goetzel, P.C.

(57) **ABSTRACT**

Embodiments of the invention relate generally to computing devices and systems, software, computer programs, applications, and user interfaces, and more particularly, to synchronizing portions of video as a function of the post-capture generation of synchronization points for audio, the portions of video being captured at multiple cameras.

23 Claims, 12 Drawing Sheets

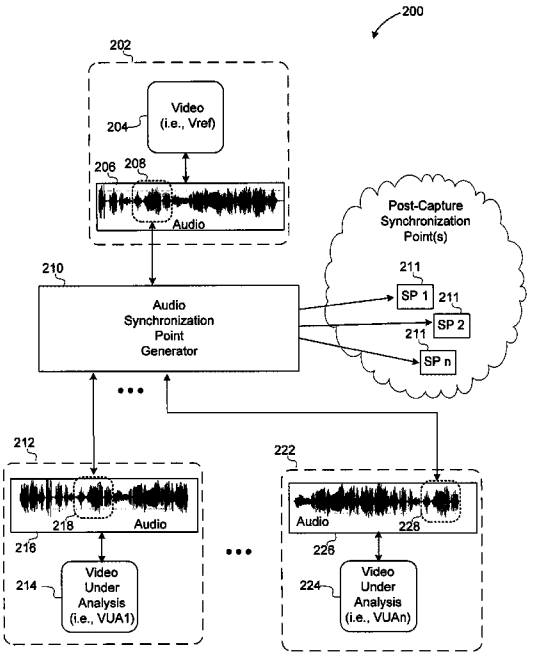

Netflix v. GoTV
IPR2023-00758
Netflix Ex. 1019

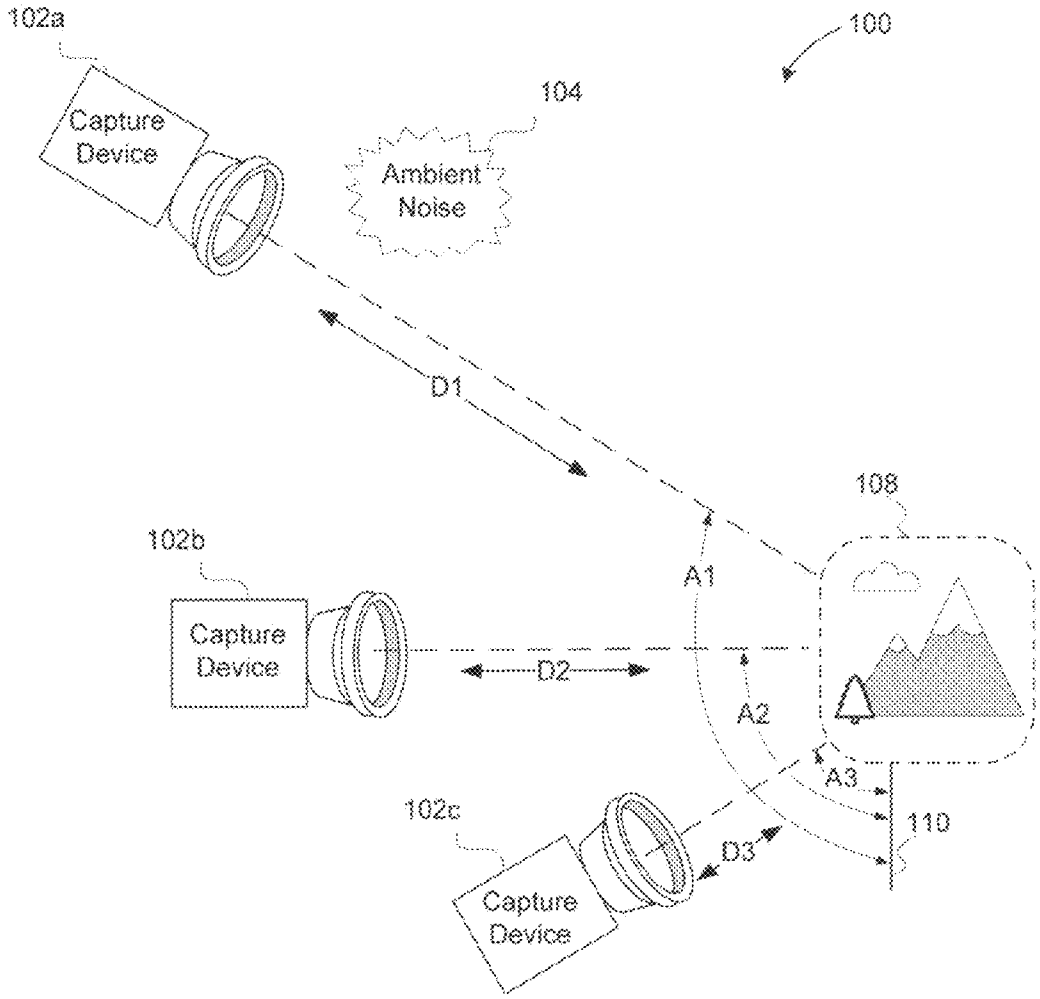

FIG. 1A
(Prior Art)

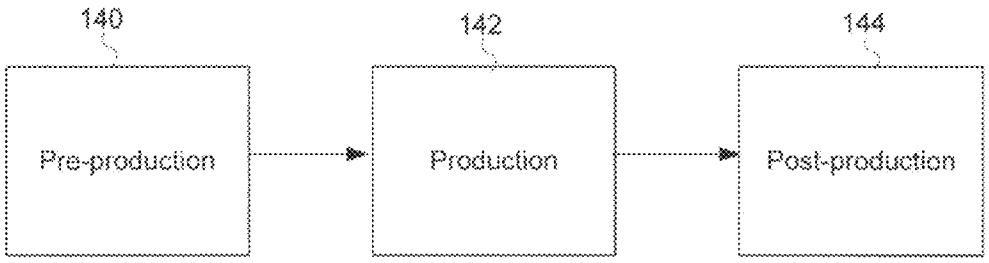

FIG. 1B
(Prior Art)

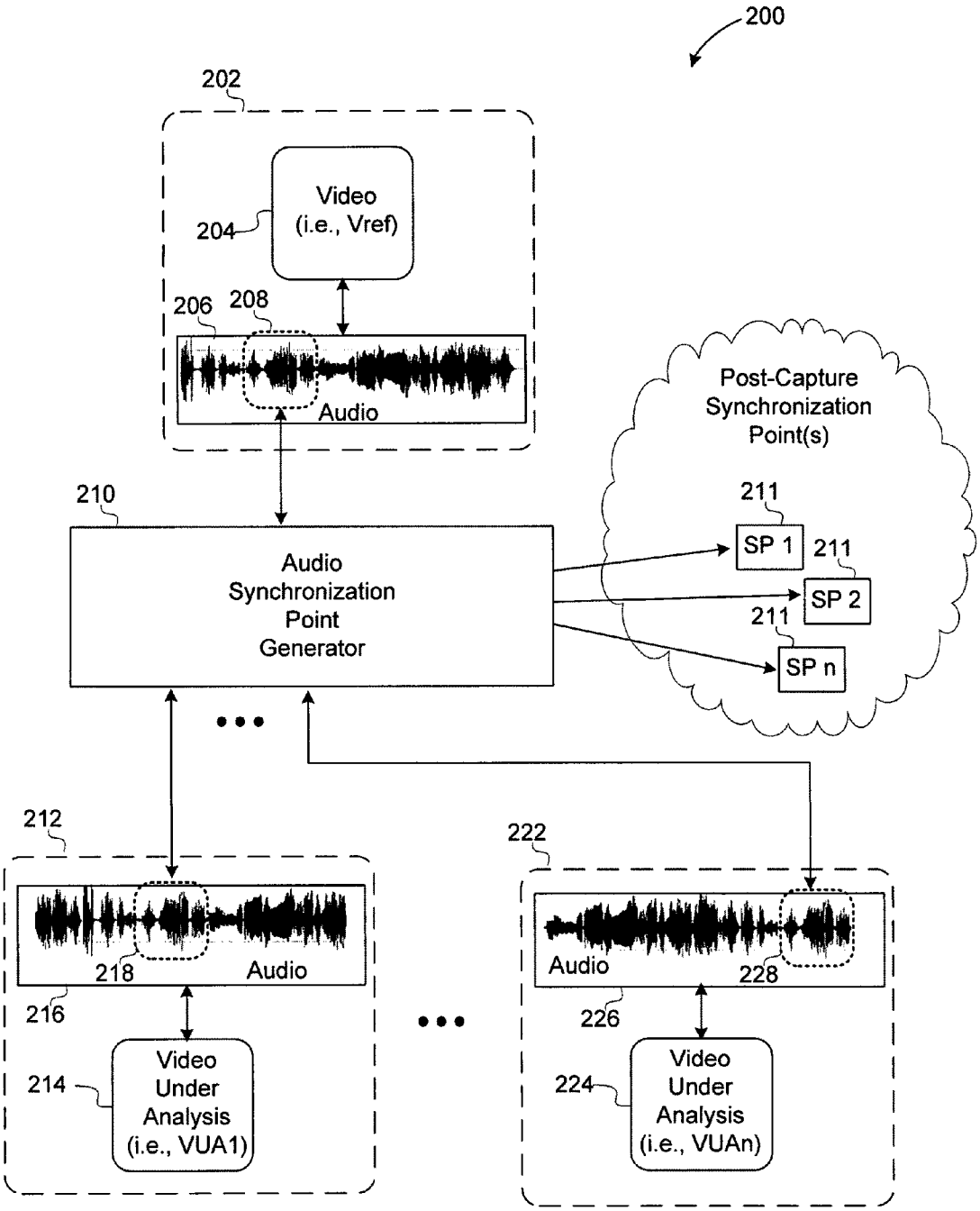
200
202
Video
(i.e., Vref)
204
206
208
Audio
Post-Capture
Synchronization
Point(s)
210
211
SP 1
211
SP 2
211
SP n
Audio
Synchronization
Point
Generator
212
222
218
Audio
216
Audio
228
226
Video
Under
Analysis
(i.e., VUA1)
214
Video
Under
Analysis
(i.e., VUAn)
224

FIG. 2A

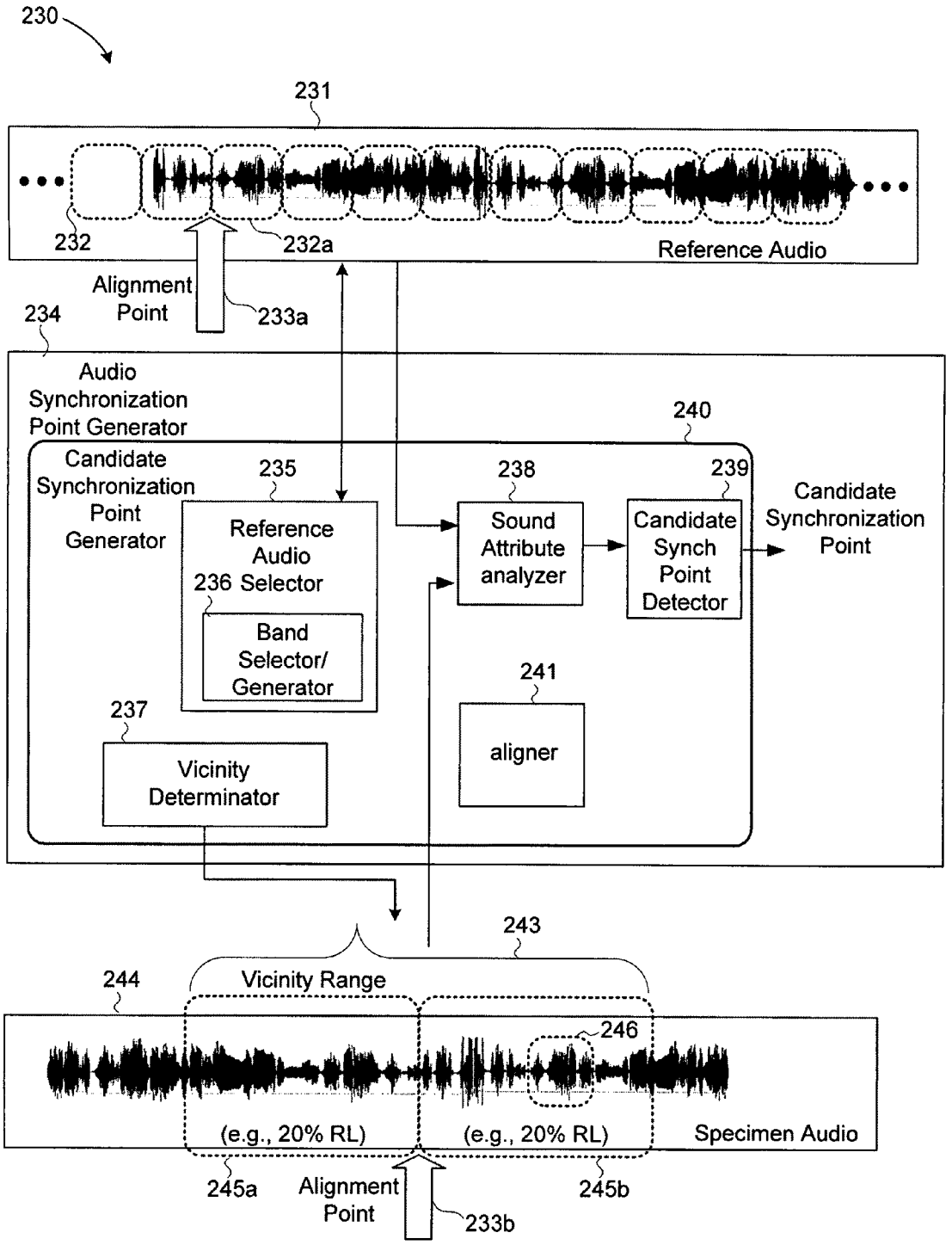
230
231
232
232a
Reference Audio
Alignment Point
233a
234
Audio Synchronization Point Generator
240
Candidate Synchronization Point Generator
235
Reference Audio Selector
236
Band Selector/ Generator
238
Sound Attribute analyzer
239
Candidate Synch Point Detector
Candidate Synchronization Point
241
aligner
237
Vicinity Determinator
243
244
Vicinity Range
246
(e.g., 20% RL)
(e.g., 20% RL)
Specimen Audio
245a
Alignment Point
233b
245b

FIG. 2B

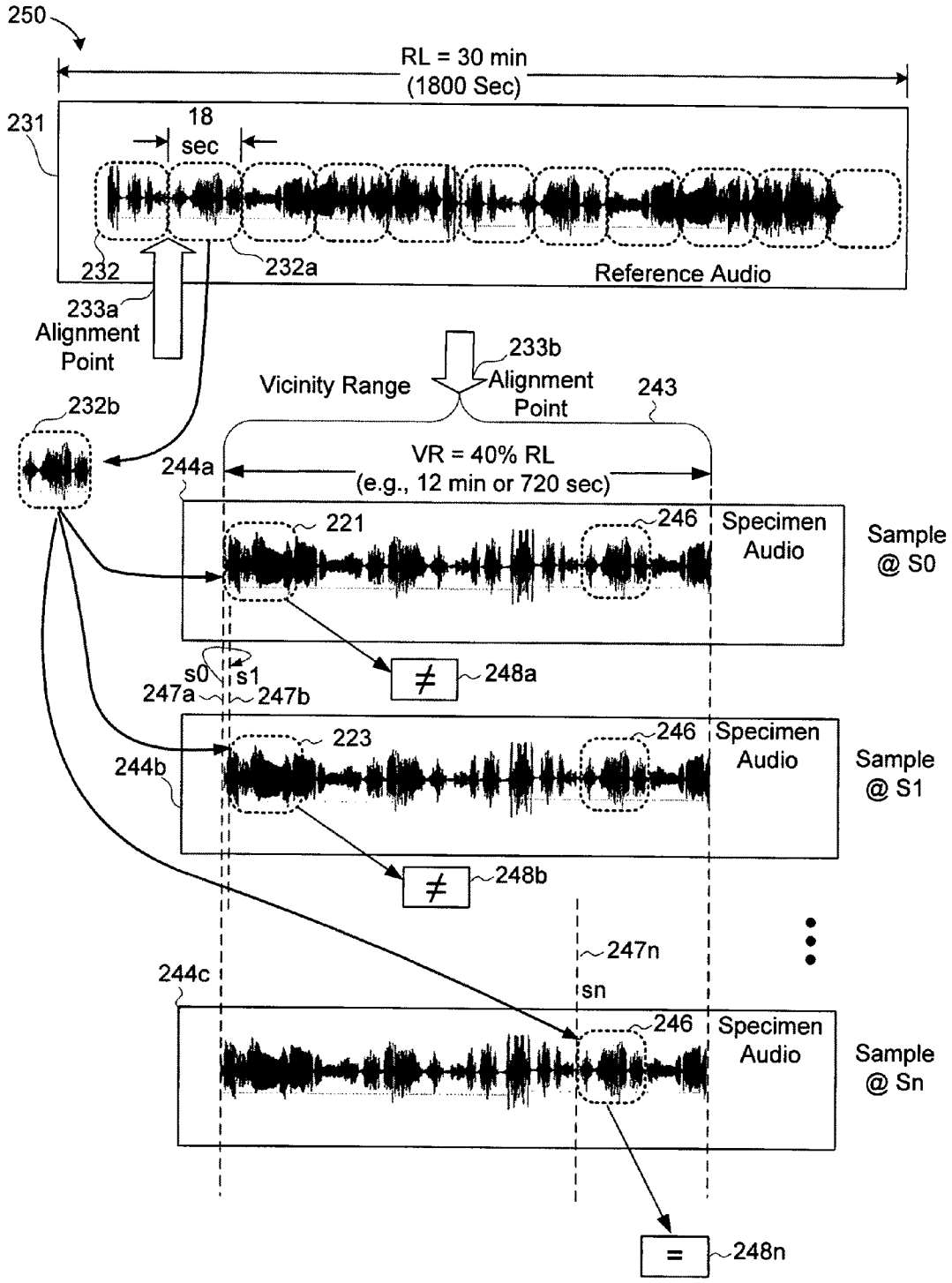
250
RL = 30 min
(1800 Sec)
231
18
sec
232
232a
Reference Audio
233a
Alignment
Point
232b
Vicinity Range
233b
Alignment
Point
243
VR = 40% RL
(e.g., 12 min or 720 sec)
244a
221
246
Specimen
Audio
Sample
@ S0
s0
s1
247a
247b
≠
248a
223
246
Specimen
Audio
244b
Sample
@ S1
≠
248b
247n
244c
sn
246
Specimen
Audio
Sample
@ Sn
=
248n

FIG. 2C

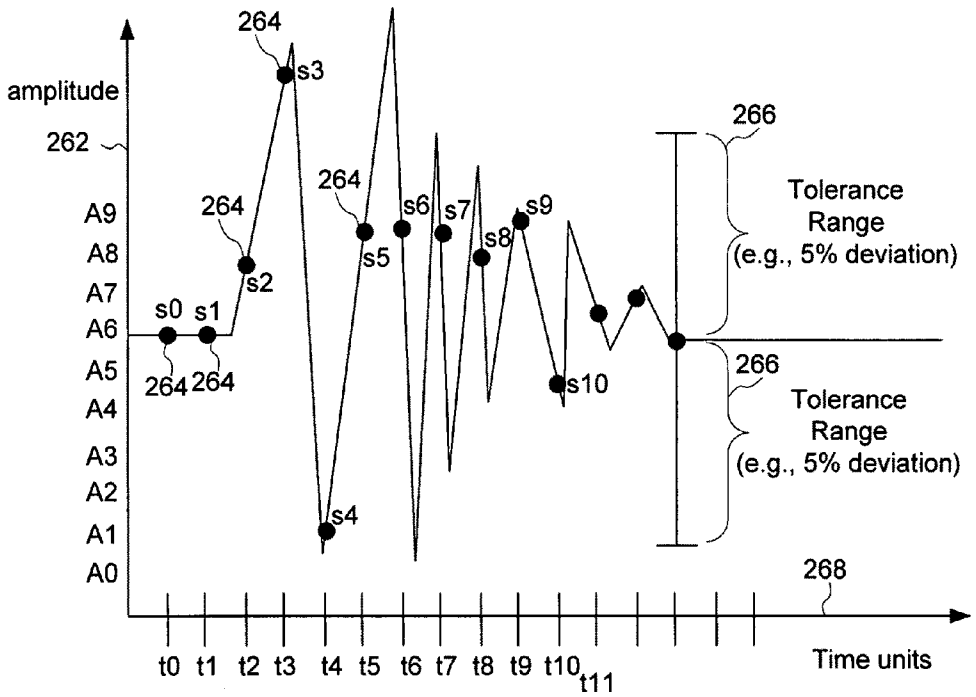
amplitude
262
A9
A8
A7
A6
A5
A4
A3
A2
A1
A0
264
s0
s1
s2
s3
s4
s5
s6
s7
s8
s9
s10
266
Tolerance Range (e.g., 5% deviation)
268
t0 t1 t2 t3 t4 t5 t6 t7 t8 t9 t10 t11
Time units

FIG. 2D

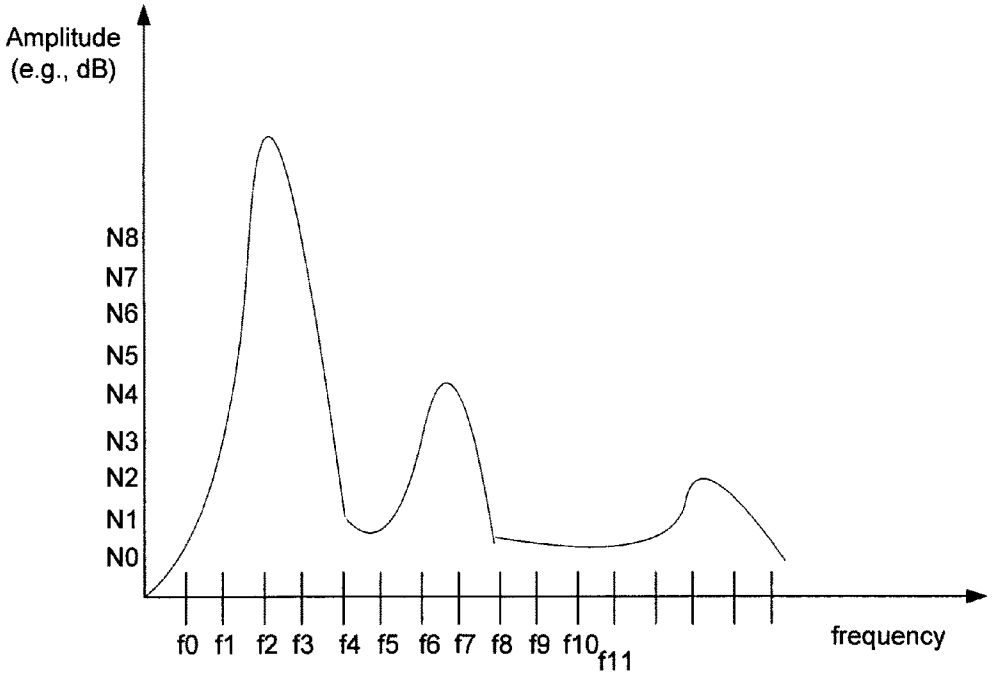
Amplitude (e.g., dB)
N8
N7
N6
N5
N4
N3
N2
N1
N0
f0 f1 f2 f3 f4 f5 f6 f7 f8 f9 f10 f11
frequency

FIG. 2E

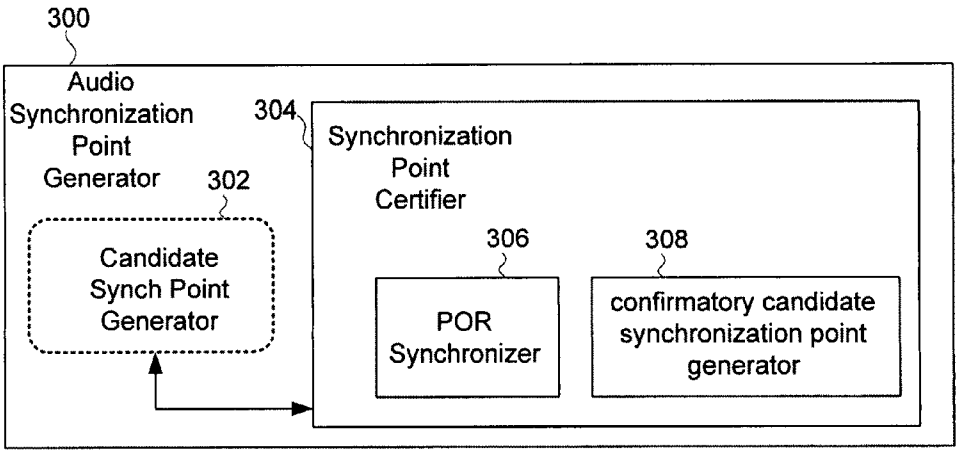
300
Audio Synchronization Point Generator
302
Candidate Synch Point Generator
304
Synchronization Point Certifier
306
POR Synchronizer
308
confirmatory candidate synchronization point generator

FIG. 3A

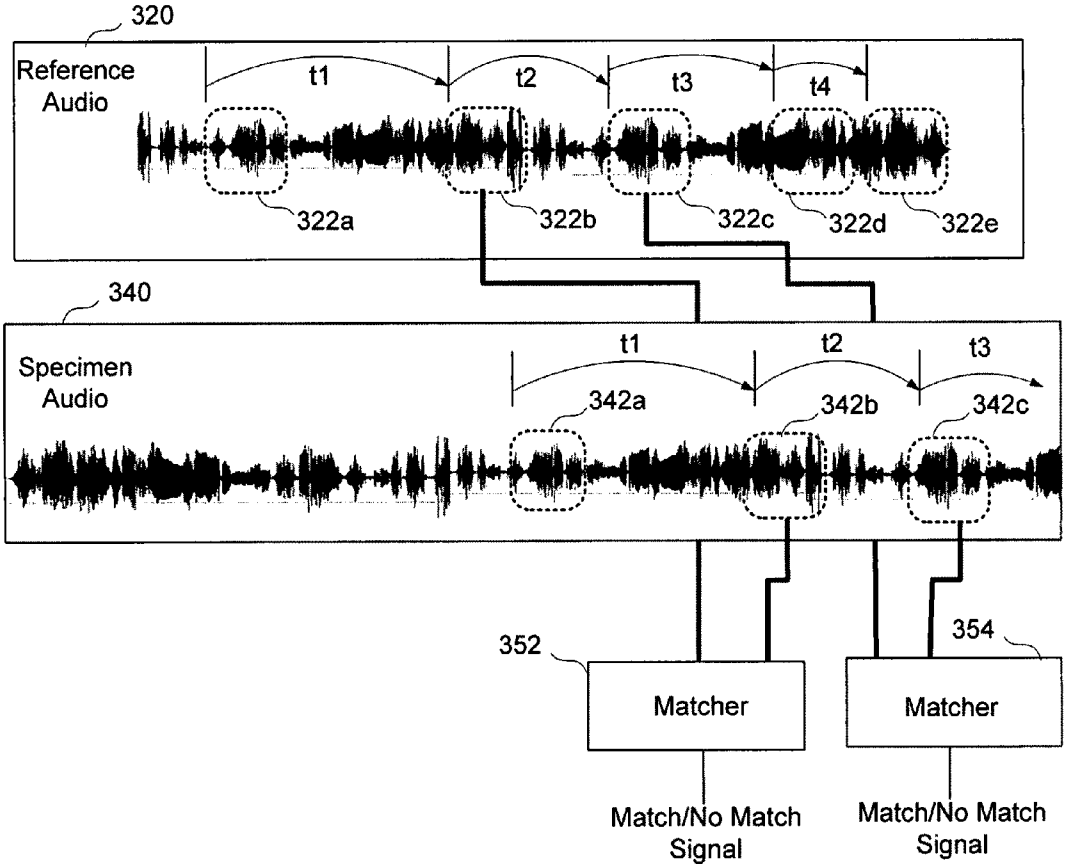
320
Reference Audio
t1
t2
t3
t4
322a
322b
322c
322d
322e
340
Specimen Audio
t1
t2
t3
342a
342b
342c
352
Matcher
354
Matcher
Match/No Match Signal
Match/No Match Signal

FIG. 3B

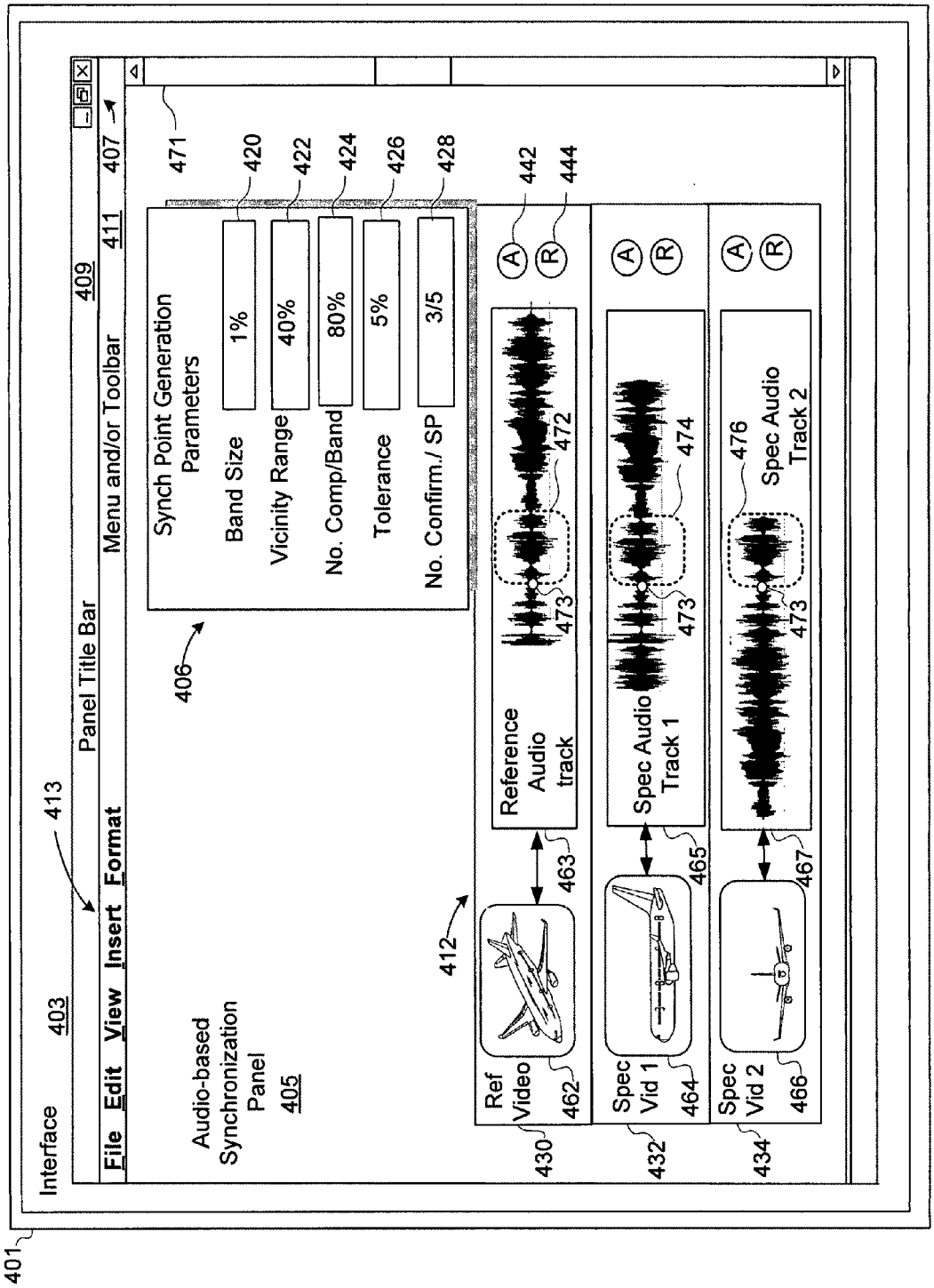
401
Interface
403
413
File Edit View Insert Format
Panel Title Bar
409
Menu and/or Toolbar
411
407
Audio-based Synchronization Panel
405
406
Synch Point Generation Parameters
Band Size
1%
Vicinity Range
40%
No. Comp/Band
80%
Tolerance
5%
No. Confirm./ SP
3/5
420
422
424
426
428
471
412
Ref Video
430
462
Reference Audio track
463
472
473
442
444
A
R
Spec Vid 1
432
464
Spec Audio Track 1
465
474
Spec Vid 2
434
466
Spec Audio Track 2
467
476

FIG. 4

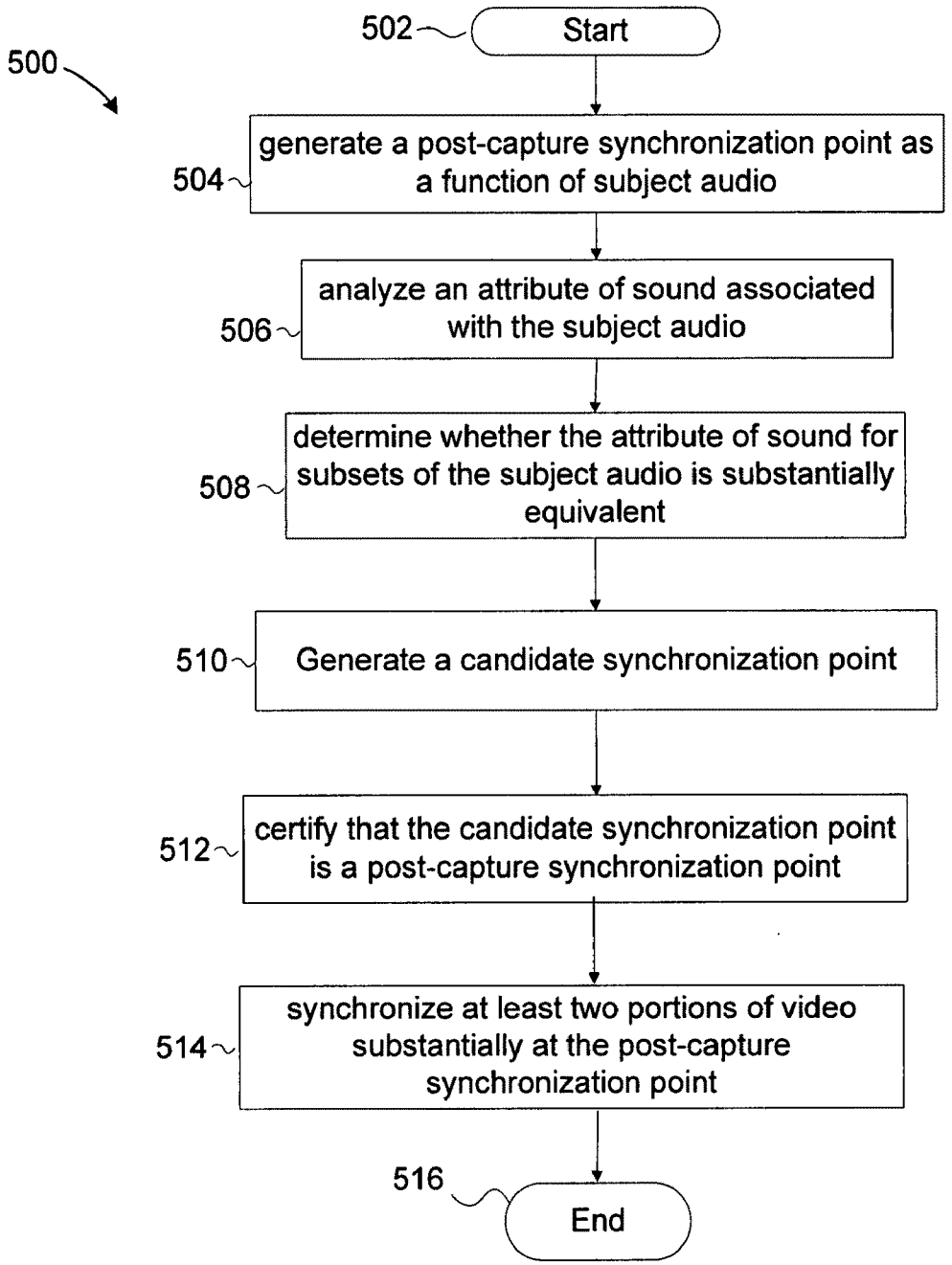
500
502
Start
504
generate a post-capture synchronization point as a function of subject audio
506
analyze an attribute of sound associated with the subject audio
508
determine whether the attribute of sound for subsets of the subject audio is substantially equivalent
510
Generate a candidate synchronization point
512
certify that the candidate synchronization point is a post-capture synchronization point
514
synchronize at least two portions of video substantially at the post-capture synchronization point
516
End

FIG. 5

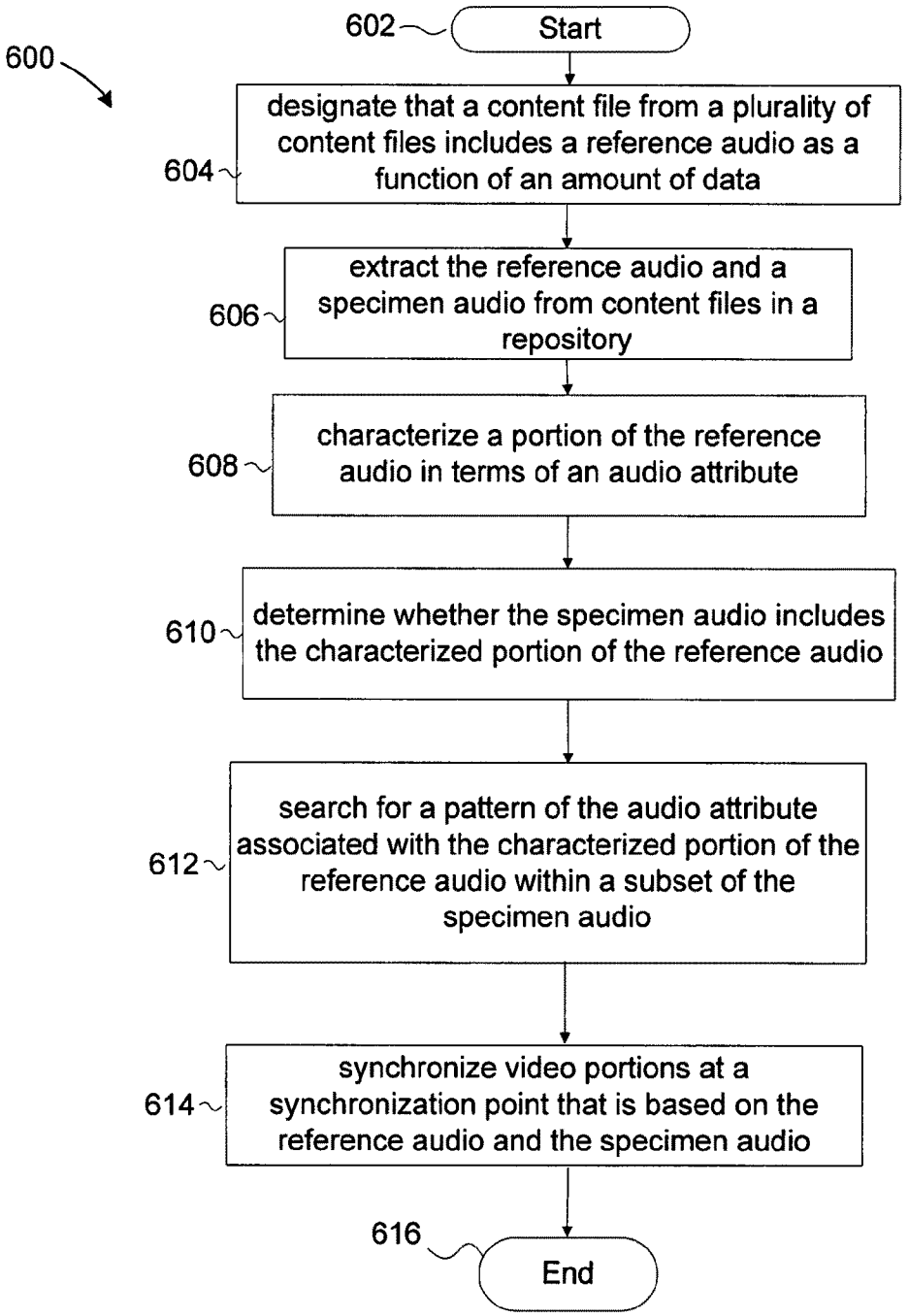
600
602
Start
604
designate that a content file from a plurality of content files includes a reference audio as a function of an amount of data
606
extract the reference audio and a specimen audio from content files in a repository
608
characterize a portion of the reference audio in terms of an audio attribute
610
determine whether the specimen audio includes the characterized portion of the reference audio
612
search for a pattern of the audio attribute associated with the characterized portion of the reference audio within a subset of the specimen audio
614
synchronize video portions at a synchronization point that is based on the reference audio and the specimen audio
616
End

FIG. 6

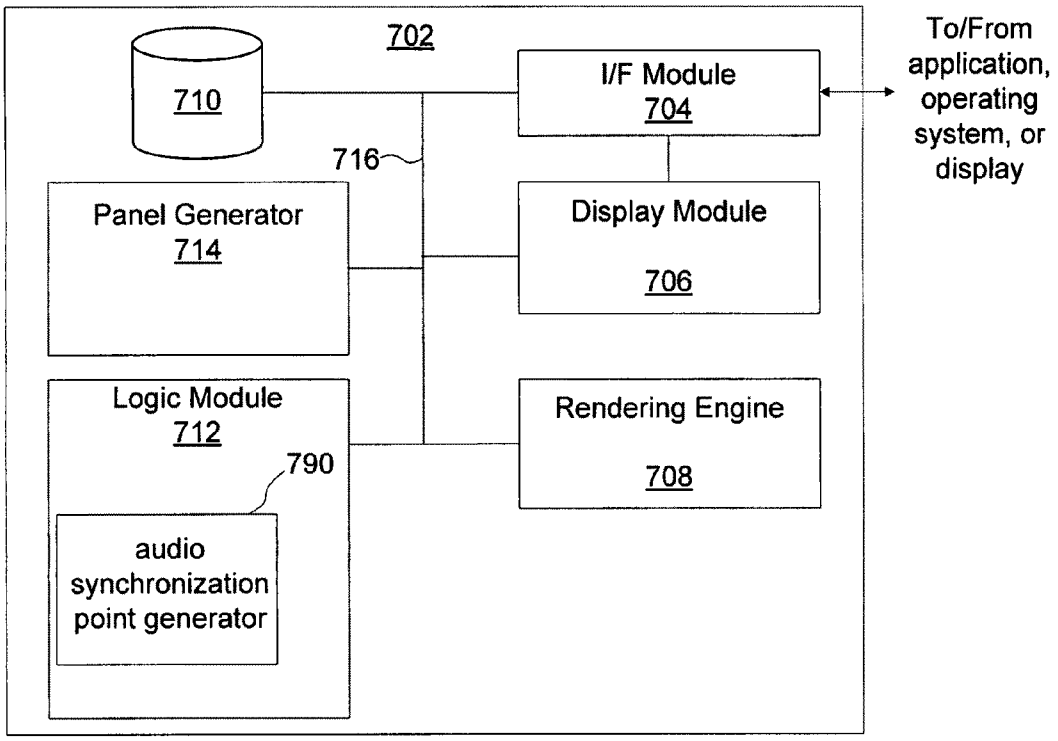
702
710
I/F Module
704
To/From application, operating system, or display
716
Panel Generator
714
Display Module
706
Logic Module
712
790
Rendering Engine
708
audio synchronization point generator

FIG. 7A

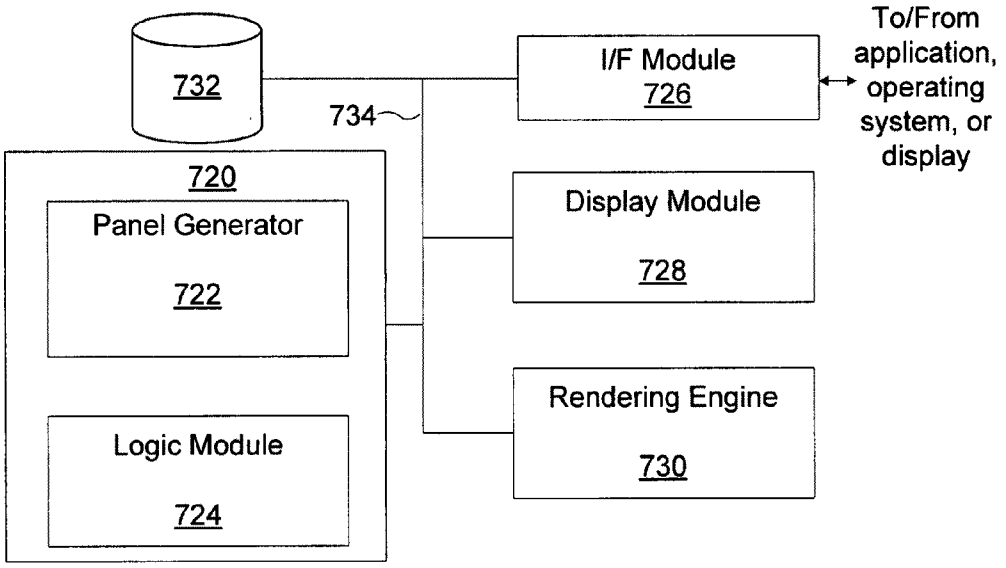
732
I/F Module
726
To/From application, operating system, or display
734
720
Panel Generator
722
Display Module
728
Rendering Engine
730
Logic Module
724

FIG. 7B

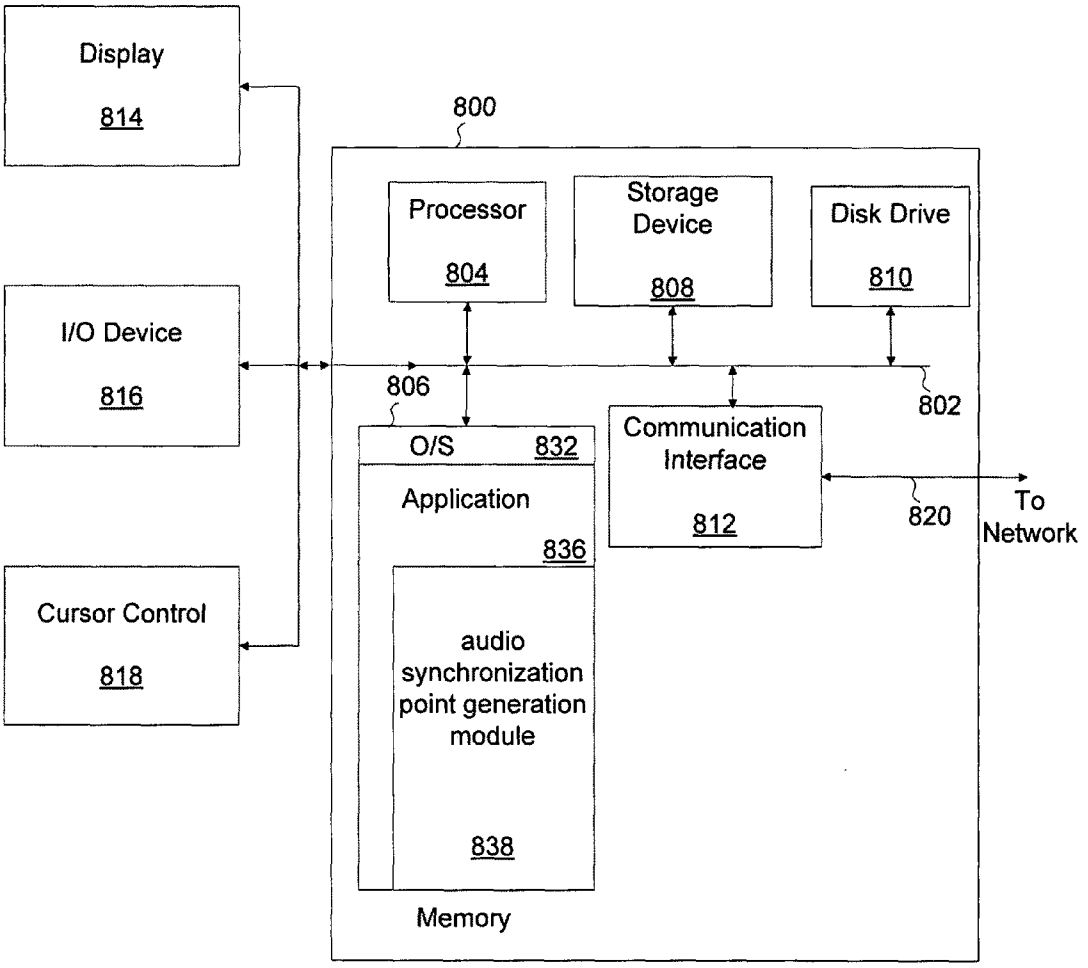
Display
814
800
Processor
804
Storage Device
808
Disk Drive
810
I/O Device
816
806
802
O/S
832
Communication Interface
812
Application
836
820
To Network
Cursor Control
818
audio synchronization point generation module
838
Memory

FIG. 8

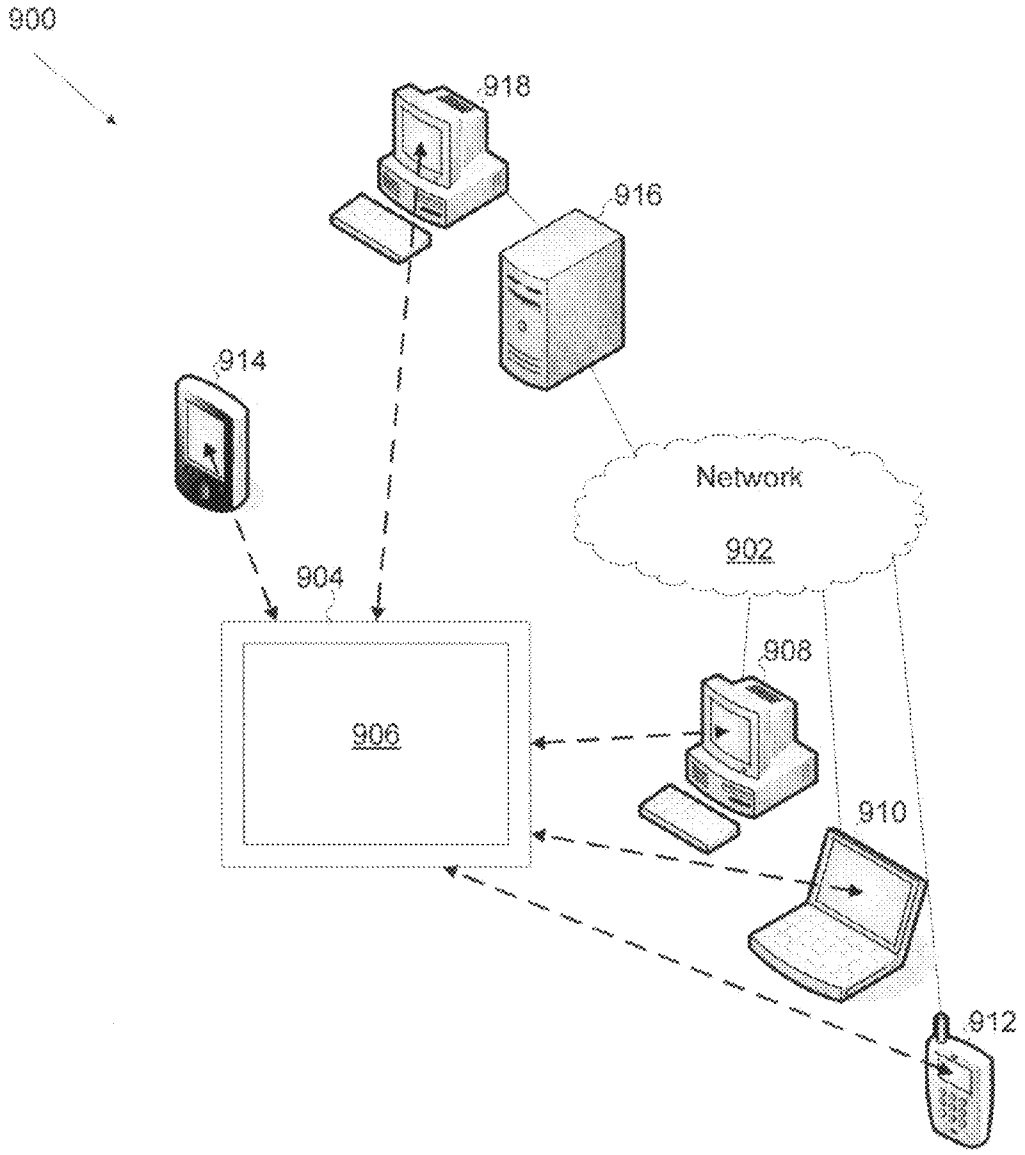

FIG. 9

POST-CAPTURE GENERATION OF SYNCHRONIZATION POINTS FOR AUDIO TO SYNCHRONIZE VIDEO PORTIONS CAPTURED AT MULTIPLE CAMERAS

FIELD OF THE INVENTION

Embodiments of the invention relate generally to computing devices and systems, software, computer programs, applications, and user interfaces, and more particularly, to synchronizing portions of video as a function of the post-capture generation of synchronization points for audio, the portions of video being captured at multiple cameras.

BACKGROUND OF THE INVENTION

When editing audio and video captured by multiple cameras, traditional media editing applications typically operate on the premise that audio portions captured at different cameras angles are coextensive with the captured video and align at a common point in time. But this is often not the case. In practice, the spatial arrangement of the multiple cameras, as well as the environment, contribute to deviations in audio relative to some point in time. These deviations, which can be as small as a fraction of a second, can lead to two or more captured audio portions being out of synchronization as perceived, for example, by a human listener.

FIG. **1**A illustrates a multi-camera arrangement **100** for capturing video and audio of a subject **108** at different angles and positions. As shown, capture devices **102***a*, **102***b*, and **102***c*, which are typically cameras, are arranged at different angles A**1**, A**2**, and A**3** relative to reference **110**. Further, these capture devices are positioned at different distances, D**1**, D**2**, and D**3** in space from subject **108**. In this typical multi-camera arrangement **100**, these angles and distances, as well as other various factors, such as the occurrence of ambient noise **104** near capture device **102***a*, affect the synchronization (and/or the quality) of the audio portions as they are captured.

One common technique for synchronizing the video captured at capture devices **102***a*, **102***b*, and **102***c* is to implement time codes associated with each video (or otherwise use some sort of global synchronization signal) to synchronize both the video and audio portions. In particular, a user is usually required to manually adjust the different videos to bring their time codes into agreement. A time code normally describes the relative progression of a video images in terms of an hour, minute, second, and frame (e.g., HH:MM:SS:FR). But a drawback to using time codes to synchronize audio requires the user to synchronize different video portions to a particular frame before synchronizing the audio portions. The effort to synchronize the audio is further exacerbated due to the number of samples of audio sound that is captured relative to the number of video frames. Typically, for each frame of video (e.g., 30 frames per second), there are 1,600 samples of audio (e.g., 48,000 samples per second). As such, audio portions for capture devices **102***a*, **102***b*, and **102***c* are typically synchronized based on the video portions and their time codes, which can contribute to undesired sound delays and echoing effects. Another common technique for synchronizing the audio (and the video) captured at capture devices **102***a*, **102***b*, and **102***c* is to use a clapper to generate a distinctive sound during the capture of the audio and video. A clapper creates an audible sound—as a reference sound—to synchronize audio during the capture of the audio. The clapper sound is used for editing purposes and is discarded during editing. Consider that a clapper (not shown) generates a sound ("noise") **104** for capture by capture devices **102***a*, **102***b*, and **102***c*. Thus, clapper noise **104** can be used to synchronize the audio. A drawback to using clapper noise **104** to synchronize audio is that the distance from noise and capture devices **102***a*, **102***b*, and **102***c* can cause delays that hinder synchronization of the audio relating to scene **108**.

FIG. **1**B illustrates a typical work flow to integrate indicia, such as time codes and clapper sounds, within the audio or video for synchronization purposes prior to and/or during the capture of video using a multi-camera arrangement. As shown, a typical work flow to film a scene **108** (FIG. **1**A) includes the stages of pre-production **140** (i.e., prior to capturing video and audio), production **142** (i.e., the capturing of video and audio), and post-production **144** (i.e., subsequent to capturing video and audio). In a pre-production stage **140** of capturing video, common synchronization techniques usually require that a user procure either time code generation hardware or a clapper, or both, before the video and audio is captured. In a production stage **142**, common synchronization techniques usually require that a user implement time codes or a clapper to introduce points at which to synchronize video during the capture of the video and audio. In a post-production stage **144**, a user normally uses the common synchronization techniques of the pre-production **140** and production **142** stages to synchronize the video. The time codes and clapper sounds require removal as they are intended for editing purposes and are distracting to an audience if time codes remain visible and clapper sounds remain audible in the final product.

It would be desirable to provide improved computing devices and systems, software, computer programs, applications, and user interfaces that minimize one or more of the drawbacks associated with conventional techniques for synchronizing either audio or video, or both.

BRIEF DESCRIPTION OF THE FIGURES

The invention and its various embodiments are more fully appreciated in connection with the following detailed description taken in conjunction with the accompanying drawings, in which:

FIG. **1**A illustrates a multi-camera arrangement for capturing video and audio of a subject at different angles and positions;

FIG. **1**B illustrates a typical work flow to integrate indicia in connection the audio or video for synchronization purposes prior to and/or during the capture of video using a multi-camera arrangement;

FIG. **2**A is a diagram of an audio synchronization point generator that is configured to generate points at which to synchronize video and/or audio that are captured at multiple capture devices, according to at least one embodiment of the invention;

FIG. **2**B is a diagram depicting an audio synchronization point generator that is configured to generate candidate synchronization points, according to at least one embodiment of the invention;

FIG. **2**C is a diagram depicting an example of the operation of a sound attribute analyzer and a candidate synchronization point detector to determine one or more candidate synchronization points, according to at least one specific embodiment of the invention;

FIGS. **2**D and **2**E are diagrams depicting different attributes of sound that can be used to determine candidate synchronization points, according to various embodiments of the invention;

FIG. 3A illustrates another example of an audio synchronization point generator that includes a synchronization point certifier, according to at least one embodiment of the invention;

FIG. 3B illustrates the functionality of a synchronization point certifier, according to at least one embodiment of the invention;

FIG. 4 is a diagram depicting the presentation of an audio-based synchronization panel, according to at least one embodiment of the invention;

FIG. 5 is a flow diagram depicting one example of a method for synchronizing video and/or audio based on the generation of post-capture synchronization points, according to one embodiment of the invention;

FIG. 6 is a flow diagram depicting another example of a method for synchronizing video and/or audio based on the generation of post-capture synchronization points, according to another embodiment of the invention;

FIG. 7A illustrates an example of a panel presentation application for implementing a multi-camera panel that presents audio tracks synchronized with the use of post-capture synchronization points, according to various embodiments of the invention;

FIG. 7B illustrates an alternative example of a panel presentation application for implementing a multi-camera panel that presents audio tracks synchronized with the use of post-capture synchronization points, according to at least one embodiment of the invention;

FIG. 8 illustrates an exemplary computer system suitable for implementing an interactive panel for an interface to modify the operation of an audio synchronization point generator, according to at least one embodiment of the invention; and

FIG. 9 illustrates an example of a panel presentation system for editing video clips associated with post-capture synchronization points for a reference audio and a specimen audio, according to various embodiment of the invention.

Like reference numerals refer to corresponding parts throughout the several views of the drawings. Note that most of the reference numerals include one or two left-most digits that generally identify the figure that first introduces that reference number.

DETAILED DESCRIPTION

FIG. 2A is a diagram **200** of an audio synchronization point generator that is configured to generate points at which to synchronize video and/or audio that are captured at multiple capture devices, according to at least one embodiment of the invention. Audio synchronization point generator **210** can be configured to analyze different portions of content, such as content portions **202**, **212**, and **222**, for synchronizing audio portions, such as audio portions **206**, **216**, and **226**, with portions of video, such as video portions **204**, **214**, and **224**. Different content portions can be captured by different cameras in a multiple-camera arrangement. Audio synchronization point generator **210** can be further configured to generate synchronization points **211** (e.g., SP**1**, SP**2**, . . . , SPn) that identify at least one portion of audio at which content portions **202**, **212**, and **222** are in (or are substantially in) synchronicity. Thus, synchronization points **211** facilitate the synchronization of audio portions **206**, **216**, and **226**, which, in turn, facilitate the synchronization of video portions **204**, **214**, and **224**. In one embodiment, audio synchronization point generator **210** can be configured to analyze an attribute of sound associated with, for example, a subset **208** of audio portion **206**, and to determine whether the attribute of sound for subsets **218** and **228** are equivalent (or substantially equivalent). Equivalent attributes for audio subsets **208**, **218**, and **228**, therefore, can represent a synchronization point for at least audio portions **206**, **216**, and **226**. In at least one embodiment, audio synchronization point generator **210** can be configured to select a portion of video **204** as a reference video ("Vref"), and to analyze audio subset **208** against audio subsets **218** and **228** to synchronize with video portions **214** and **224**, respectively, both of which represent specimen video under analysis ("VUA"). Thus, audio synchronization point generator **210** can provide for the generation of post-capture synchronization points for the purposes of synchronizing at least two portions of audio and/or video that can be captured at, for example, multiple capture devices (e.g., multiple cameras).

In view of the foregoing, audio synchronization point generator **210** can implement post-capture synchronization points to automatically identify synchronization points for at least two portions of audio, according to at least one embodiment of the invention. This can reduce the manual identification of equivalent portions of audio and/or video for synchronization purposes. Further, audio synchronization point generator **210** can generate post-capture synchronization points as a function of subject audio, which can include sounds generated by the subject and/or scene for which audio and/or video was captured. Subject audio is sought to be captured as content rather than for production (e.g., editing) purposes. As such, the generation of post-capture synchronization points for audio to synchronize video reduces the necessity to rely on external synchronization information to synchronize audio. Examples of external synchronization information include time codes and clapper sounds, as well as other synchronization signals and artificially-inserted sounds (i.e., non-subject sounds) that provide for synchronization points either prior to, or during, the capture of audio and video, or both. In addition, the implementation of audio synchronization point generator **210** can conserve resources and computational overhead by reducing the need to implement hardware to create the external synchronization information.

FIG. 2B is a diagram **230** depicting an audio synchronization point generator that is configured to generate candidate synchronization points, according to at least one embodiment of the invention. Audio synchronization point generator **234** can operate to identify a reference audio with which to compare to other specimen audio(s) to determine equivalent (or substantially equivalent) portions of audio that might qualify as post-capture synchronization points. In this example, audio synchronization point generator **234** includes a candidate synchronization point generator **240** that can be configured to generate at least one candidate synchronization point for a reference audio **231** and a specimen audio **244**. In various embodiments, reference audio **231** and specimen audio **244** can either include subject audio or exclude external synchronization information, such as audible external synchronization information, or both. As shown, candidate synchronization point generator **240** can include a reference audio selector **235**, a vicinity determinator **237**, a sound attribute analyzer **238**, a candidate synchronization ("synch") point detector **239**, and aligner **241**.

In operation, reference audio selector **235** can be configured to analyze content files to identify audio content within each content file for synchronization purposes. For example, reference audio selector **235** can be configured to extract audio portions from content files stored in a repository (not shown), while preserving associations to the corresponding video portions to synchronize both the audio and video. Reference audio selector **235** can also be configured to designate

an audio portion from a content file as reference audio **231**. In a specific embodiment, an audio portion can be designated as reference audio **231** as a function of an amount of data associated with the content file or its audio portion. Specifically, reference audio selector **235** can determine which content file has the largest amount of data for either the content or the audio, or both, and then designate the audio portion from that content file as reference audio **231**. In at least one specific embodiment, reference audio **231** can have the longest duration relative to other audio portions from other content files. In one embodiment, reference audio selector **235** can also select one of the other audio portions as specimen audio **244**.

FIG. **2**B shows reference audio selector **235** including a band selector/generator **236** for generating and managing bands **232** of reference audio **231**. In one embodiment, band selector/generator **236** can be configured to subdivide reference audio **231** into bands **232**. As such, bands **232** can represent subsets of reference audio **231**. Further, consider the following example in which reference audio **231** has a duration expressed in terms of time (i.e., a reference length, or "RL"), such as 30 minutes. In operation, band selector/generator **236** can generate any number of bands **232** having the same or different sizes. In one example, each band **232** can represent one percent (i.e., 1%) of the reference length. As such, each band **232** can represent 18 seconds (i.e., 1% of 30 minutes). Further, band selector/generator **236** can be configured to select a band for determining whether specimen audio **244** contains an equivalent (or substantially equivalent) attribute of sound, such as the attribute of sound for a subset **246** of specimen audio **244**.

Vicinity determinator **237** can be configured to generate a vicinity range **243** within which band **232***a* is compared to specimen audio **244**. Vicinity determinator **237** can be configured to size vicinity range **243** to any duration. For example, vicinity determinator **237** can size vicinity range **243** to 40% of RL (i.e., 12 minutes if RL is 30 minutes). Aligner **241** can be configured to align vicinity range **243** with an alignment point **233***b* that is coincident (or substantially coincident) with alignment point **233***a* for band **232***a*. In one embodiment, a time reference, such as a time code, can constitute alignment points **223***a* and **233***b*. While aligner **241** can be configured to position vicinity range **243** in any relation to alignment point **233***b*, aligner **241** has centered vicinity range **243** in this example such that a first half **245***a* and a second half **245***b* each includes 20% RL. In some embodiments, vicinity range **243** can extend up to 100% of reference audio **231**.

Sound attribute analyzer **238** and candidate synchronization point detector **239** can be respectively configured to analyze an attribute of sound associated with reference audio **231**, and determine whether the attribute of sound for subsets of specimen audio **244** is substantially equivalent. In at least one embodiment, sound attribute analyzer **238** can be configured to characterize a portion of reference audio **231**, such as band **232***a*, in terms of at least one audio attribute to form a characterized portion (not shown) of reference audio **231**. In one embodiment, sound attribute analyzer **238** can be configured to form the characterized portion of reference audio **231** to identify a pattern, and to search specimen audio **244** to find other matching patterns. Candidate synchronization point detector **239** can be configured to determine that specimen audio **244** includes the characterized portion of reference audio **231**, and to generate at least a candidate synchronization point. In one embodiment, candidate synchronization point detector **239** can be configured to detect a matching pattern in specimen audio **244** to establish a candidate synchronization point. In at least one embodiment, band selector/generator **236** is configured to select another band **232** should candidate synchronization point detector **239** fail to detect a matching pattern, and is further configured to continue selecting other bands **232** until either at least one candidate synchronization point is detected or none is. In the latter case, audio synchronization point generator **234** can so indicate a state of no match to a user via, for example, a user interface (not shown). Then, reference audio selector **235** can select another specimen audio (not shown) for performing similar analysis.

In one embodiment, the attribute of sound can be the amplitude for an audio waveform that can expressed in percentages, decibels, and the like, relative to time. As such, sound attribute analyzer **238** can be configured to analyze the audio waveform amplitude in band **232***a* of reference audio **231** to identify a pattern of waveform amplitudes, as shown in band **232***a* of FIG. **2**B. As such, sound attribute analyzer **238** can compare waveform amplitudes of band **232***a* with waveform amplitudes of specimen audio **244**. To determine whether a candidate synchronization point exists, candidate synchronization point detector **239** determines whether the waveform amplitudes for band **232***a* match the waveform amplitudes for one or more subsets of specimen audio **244**. In the example shown, candidate synchronization point detector **239** is configured to detect that the waveform amplitudes for band **232***a* are equivalent to the waveform amplitudes for subset **246**. Subsequently, candidate synchronization point detector **239** can generate a candidate synchronization point for band **232***a* and subset **246**. In at least one embodiment, the candidate synchronization point for band **232***a* and subset **246** can be located at or near band **232***a* and subset **246** so as to provide for the alignment of band **232***a* and subset **246** relative to each other. In a specific embodiment, a candidate synchronization point can be implemented as a post-capture synchronization point. In various embodiments, the attribute of sound can represent any characteristic of audio with which to compare and match portions of reference audio **231** and specimen audio **244**. For example, the attribute of sound can also be the amplitude for an audio waveform relative to frequency. As such, sound attribute analyzer **238** can be configured to analyze the spectral frequencies and audio waveform amplitude in band **232***a* to identify a pattern for a frequency spectrum, which can be compared against subsets of specimen audio **244**, including subset **246**.

Candidate synchronization point detector **239** can be configured to provide a tolerance among values for the audio attribute to reduce false negatives (i.e., improper indications of mismatches between reference audio **231** and specimen audio **244**) due to differences in tone, background noise, volume, and the like, that manifest in different audio portions that are captured by different cameras at different angles and spatial locations, according to at least one embodiment. In one embodiment, candidate synchronization point detector **239** can be configured to establish a deviation from a pattern for band **232***a* to form a deviated pattern (not shown) within which a subset of specimen audio **244** is deemed to match the pattern. As such, candidate synchronization point detector **239** can be configured to generate a candidate synchronization point if a portion of specimen audio **244**, such as vicinity range **243**, includes the deviated pattern, such as in subset **246**. In one instance, if the amplitudes for the audio waveform for both band **232***a* and a particular subset of specimen audio **244** deviate less than an amount defined as a tolerance, such as by 5%, then band **232***a* and that particular subset of specimen audio **244** can be deemed as being equivalent (or substantially equivalent).

As used herein, the term "synchronization point" refers generally, at least in one embodiment, to a point at which portions of two or more audio waveforms, such as those captured by multiple capture devices at different angles and/or positions, are in synchronization. As an example, consider that matching shapes for portions of two or more audio waveforms relative to a point in time can constitute a synchronization point. As such, a synchronization point can indicate that a part of two or more audio waveforms are in synchronicity. In one embodiment, a synchronization point can represent matching portions of multiple audio waveforms. In another embodiment, a synchronization point can also refer to point in time relative to the matching portions. As used herein, the term "post-capture" refers generally, at least in one embodiment, to post-production activity that occurs after capturing video and audio, and includes the process of editing content. As used herein, the term "subject audio" refers generally, at least in one embodiment, to the audio generated by something, such as a person, an object or a scene, that is captured by multiple capture devices for purposes of producing either a video with audio, or an audio recording along, such as a movie or music. An example of a subject audio is the sounds produced by actors, such as their voices.

As used herein, the term "post-capture synchronization point" refers generally, at least in one embodiment, to a synchronization point that can be generated as part of post-production activity based on the subject audio. As such, the audio used to generate synchronization points includes sounds that are intended to remain within the final product, such as a movie or music, in accordance with at least one embodiment. In various embodiments, post-capture synchronization points may or may not result from certifying candidate synchronization points. As used herein, the term "candidate synchronization point" refers generally, at least in one embodiment, to a synchronization point that has yet to be certified, and thus is not confirmed as being a post-capture synchronization point with sufficient certainty. As used herein, the term "confirmatory candidate synchronization points" refers generally, at least in one embodiment, to additional candidate synchronization points that are examined to certify the candidate synchronization point.

As used herein, the term "audio" refers generally, at least in one embodiment, to one or more sounds that are audible (e.g., perceived by humans), and can be of or relate to the transmission, storage, reproduction or reception of sound. For example, audio can be in the form of an audio waveform, an audio file, an audio signal, an audio clip, an audio track, and the like. As used herein, the term "video" refers generally, at least in one embodiment, to one or more images that are visible (e.g., perceived by humans), and can be of or relate to the transmission, storage, reproduction or reception of images. For example, video can be in the form of a video waveform, a video file, a video signal, a video clip, a video track, and the like. As used herein, the term "external synchronization information" refers generally, at least in one embodiment, to one or more indicia (e.g., time codes, clapper sounds, and the like), as well as other synchronization signals and artificially-inserted sounds (i.e., non-subject sounds) that provide for synchronization points either prior to, or during, the capture of audio and video, or both. As used herein, the terms "audio attribute" and "attribute of sound" refer generally, at least in one embodiment, to a characteristic, property, quality or state that an audio (or a portion thereof) has that can be quantified to determine whether two or more portions of audio are either equivalent or are not equivalent. Examples of audio attributes include the shapes (or patterns) of audio waveforms (e.g., in terms of amplitude and time), as well as the shapes of frequency spectra (e.g., in terms of amplitude and frequency). As used herein, the term "content" refers generally, at least in one embodiment, to information and/or material presented within a display, an interface, or the like, in relation to, for example, an audio and/or visual presentation of sounds and/or imagery. Examples of content include text, such as an electronic document (e.g., a document in Portable Document Format ("PDF")), as well as audio, images, audio/video media, such as Flash® presentations, text, and the like. As used herein, the term "panel," at least in one embodiment, can refer to displays, palettes, tabs, windows, screens, portions of an interface, and the like. As such, a content file (or media file) can include a digital data file which is composed of images, sound and words for one camera angle.

FIG. **2**C is a diagram **250** depicting an example of the operation of a sound attribute analyzer and a candidate synchronization point detector to determine one or more candidate synchronization points, according to at least one specific embodiment of the invention. Similar to the example of FIG. **2**B, a reference audio **231** is subdivided into bands **232**. Here, the reference length, or "RL", is 30 minutes (or 1,800 seconds). The size of each band **232** is set at 1% of the reference length, or 18 seconds. Specimen audios **244***a*, **244***b*, and **244***c* each represent the same portion of specimen audio, but each has a different subset, such as different subsets **221**, **223**, and **246**, against which band **232***a* is being compared. Alignment points **233***a* and **233***b* align band **223***a* with vicinity range **243**, which, in this case, has a duration equal to 40% of the reference length, or 12 minutes.

Sound attribute analyzer **238** (FIG. **2**B) is configured to compare band **232***b*, which is band **232***a*, to various subsets, such as subsets **221**, **223**, and **246**. In one embodiment, sound attribute analyzer **238** compares the first audio sample of band **232***b*—and subsequent samples therein—to the first audio sample **247***a* of specimen audio portion **244***a*, which is the 0th sample (i.e., the sample at S**0**), and subsequent samples within subset **221**. In some embodiments, reference audio **231** and specimen audio portions **244***a*, **244***b*, and **244***c* include 48,000 audio samples per second. As such, 18 seconds of audio in band **232**, as well as subsets **221**, **223**, and **246**, include 1,600 samples. So, sound attribute analyzer **238** can compare 864,000 samples (or fewer, in some cases) between band **232***b* and a subset of a specimen audio.

Continuing with the above example, candidate synchronization point detector **239** can determine whether each of the audio samples match (e.g., within an amount of tolerance). If so, then candidate synchronization point detector **239** generates a candidate synchronization point. If not, then candidate synchronization point detector **239** generates an indication **248***a* that subset **221** is not equal to band **232***b*. Moving along to the next analysis, sound attribute analyzer **238** compares the first audio sample of band **232***b*—and subsequent samples therein—to the second audio sample **247***b* of specimen audio **244***b*, which is the 1st sample (i.e., the sample at S**1**), and subsequent samples within subset **223**. Here, subset **223** does not match with band **232***b* and, thus, candidate synchronization point detector **239** generates an indication **248***b* to indicate the mismatch. Sound attribute analyzer **238** and candidate synchronization point detector **239** continue to cooperate as described above until the nth audio sample **247***n* of specimen audio **244***c* is reached. Here, the nth sample (i.e., the sample at Sn)—and subsequent samples within subset **246**—are matched to corresponding audio samples in band **232***b*. Upon determining a match, candidate synchronization point detector **239** generates an indication **248***n* that the subset **246** is equal (or is substantially equal) to band **232***b*, and generates a candidate synchronization point. In various embodiments,

sound attribute analyzer **238** can compare bands and subsets, in any order or quantity. In some embodiments, sound attribute analyzer **238** can compare fewer than the quantity of samples in bands **232** (or any number of samples) by skipping audio sample comparisons to, for example, reduce the number of comparisons.

FIGS. **2**D and **2**E are diagrams depicting different attributes of sound that can be used to determine candidate synchronization points, according to various embodiments of the invention. FIG. **2**D illustrates a part of an audio waveform for a reference audio that is compared to an audio waveform of a specimen audio (not shown). Each audio sample **264**, such as samples S**1**, S**2**, etc., have a unique amplitude at a specific unit of time **268**. Sound attribute analyzer **238** (FIG. **2**B) can be configured to compare the amplitude (e.g., "A**6**") of sample S**0** (i.e., the first sample in a band) to the amplitude of the first sample in a specimen audio subset (not shown). If the amplitude of the first sample in the specimen audio subset is within the tolerance ranges **266**, then candidate synchronization point detector **239** (FIG. **2**B) can operate to indicate a match for the samples. Subsequent samples, such as samples S**2**, S**3**, etc., are similarly analyzed until no additional samples in the band requires matching. FIG. **2**E illustrates an example of a frequency spectrum—as a matchable pattern—for the audio waveform in a band of reference audio. In one embodiment, sound attribute analyzer **238** (FIG. **2**B) can be configured to analyze the frequency spectrum (or a portion thereof) for a subset of specimen audio to generate a pattern (not shown) of frequency relative to amplitude. Sound attribute analyzer **238** then can compare the frequency spectra (or a portions thereof) for the band and the subset of specimen audio to determine whether a candidate synchronization point exists.

FIG. **3**A illustrates another example of an audio synchronization point generator that includes a synchronization point certifier, according to at least one embodiment of the invention. In this example, audio synchronization point generator **300** includes a candidate synchronization ("synch") point generator **302**, which can have equivalent structure and/or functionality as candidate synchronization point generator **240** (FIG. **2**B), and a synchronization point certifier **304**, which can be configured to certify that a candidate synchronization point is useable as a post-capture synchronization point to synchronize at least two portions of video. In particular, synchronization point certifier **304** can be configured to identify additional candidate synchronization points for additional subsets of a specimen audio and bands. As shown, synchronization point certifier **304** includes a point of reference ("POR") synchronizer **306** and a confirmatory candidate synchronization point generator **308**. Point of reference synchronizer **306** is configured to generate a point of reference with which to match the additional bands to additional subsets of the specimen audio. In one embodiment, the candidate synchronization point is the point of reference, and, thereby, provides a tentative synchronization point from which to locate confirmatory candidate synchronization points. Confirmatory candidate synchronization point generator **308** is configured to generate one or more confirmatory candidate synchronization points to certify that a candidate synchronization point generated by candidate synchronization point generator **240** can be implemented as a post-capture synchronization point.

FIG. **3**B illustrates the functionality of a synchronization point certifier, according to at least one embodiment of the invention. In response to candidate synchronization point generator **240** generating a candidate synchronization point, confirmatory candidate synchronization point generator **308** selects additional bands in a reference audio **320** to determine whether the audio in these bands are equivalent to corresponding subsets of specimen audio **340**. In this example, confirmatory candidate synchronization point generator **308** selects additional bands **322***b*, **322***c*, **322***d*, and **322***e* to match with corresponding subsets **342***b*, and **342***c* (note that subsets corresponding to bands **322***d* and **322***e* are not shown). Note that band **322***a* and subset **342** coincide with a candidate synchronization point, and, thus, provide a point of reference to locate other bands and subsets at distances, t**1**, t**2**, t**3**, etc.

Point of reference synchronizer **306** is configured to select corresponding subsets of specimen audio **340** that are separated by similar amounts of time units from each other. For example, point of reference synchronizer **306** can designate additional band **322***a* as a point of reference from which to index other additional bands **322***b* to **322***e*. As such, additional bands **322***a* and **322***b* are separated by "t**1**" time units, additional bands **322***b* and **322***c* are separated by "t**2**" time units, and so on. Similarly, point of reference synchronizer **306** can designate subset **342***a* as a point of reference from which to index other subsets **342***b* to **342***c*. As such, additional subsets **342***a* and **342***b* are separated by "t**1**" time units, additional subsets **342***b* and **342***c* are separated by "t**2**" time units, and so on. In one embodiment, synchronization point certifier **304** subdivides reference audio **320** into regions, such as 5 regions, and randomly selects a band in each region. Each randomly-selected band can be indexed in time with respect to a point of reference for reference audio **320**, such as the first randomly-selected band. Further, synchronization point certifier **304** can identify subsets in specimen audio **340** that correspond to the randomly-selected bands.

In one embodiment, synchronization point certifier **304** includes matchers to match additional bands **322***b* and **322***c* to corresponding subsets **342***b* and **342***c* (note that matchers for additional bands **322***d* and **322***e* are omitted). For example, matcher **352** is configured to determine whether additional band **322***b* matches corresponding subset **342***b*. Matcher **354** performs similar matching operations. Synchronization point certifier **304** can be configured to provide a threshold for a number of positive matches by matchers **352** and **354** (as well as others not shown) to certify that the candidate synchronization point is a post-capture synchronization point. In a specific embodiment, synchronization point certifier **304** implements 5 matchers similar to matchers **352** and **354**, and provides a threshold of 3 positive matches. As such, synchronization point certifier **304** can operate to certify that a candidate synchronization point is a post-capture synchronization point if 3 or more matchers determine matches between additional bands and subsets of specimen audio **340**. But if synchronization point certifier **304** detects 2 or fewer matches, then the candidate synchronization point is discarded as rejected in favor of, for example, determining another candidate synchronization point.

FIG. **4** is a diagram depicting the presentation of an audio-based synchronization panel, according to at least one embodiment of the invention. In this example, a display **401** is configured to provide an interface **403**, which, in turn, is configured to present an audio-based synchronization panel **405**. Audio-based synchronization panel **405** can be configured to include multi-camera panel portion **412** for at least presenting videos and audio tracks (e.g., in the form of audio waveform representations), as captured by multiple cameras. Audio-based synchronization panel **405** can also be configured to present an interactive panel portion **406** configured to accept synchronization point generation parameters for governing the operation of an audio synchronization point generator. Audio-based synchronization panel **405** includes a

panel title bar **409**, which can indicate the file name for content file that includes multi-camera audio and video, a menu and/or toolbar **411**, which is shown to include at least menu items **413**, panel control buttons **407**, and scroll bar **471**. In at least one embodiment, audio-based synchronization panel **405** facilitates editing video associated with reference audio track and one or more specimen audio tracks to form a video. In various instances, synchronization points can be implemented as audible sound as either the reference audio or the specimen audio, or both, in association with the video.

In this example, multi-camera panel portion **412** includes content captured at different capture devices each of which is at a different angle and/or position, such as content **430**, **432** and **434**. Here, content **430**, **432** and **434** include a reference video ("Ref Video") **462**, a first specimen video ("Spec Vid **1**") **464**, and a second specimen video ("Spec Vid **2**") **466**, respectively, which, in turn, are associated with a reference audio track **463**, a first specimen audio track ("Spec Audio Track **1**") **465**, and a second specimen audio track ("Spec Audio Track **2**") **467**. Audio-based synchronization panel **405** is configured to present a reference audio track **463**, a first specimen audio track ("Spec Audio Track **1**") **465**, and a second specimen audio track ("Spec Audio Track **2**") **467**, each of which is synchronized at or near a post-capture synchronization point **473**, according to one embodiments. Presentation of post-capture synchronization point **473** can be optional. An editor then can observe the videos **462**, **464**, and **466**, and audio tracks **463**, **465**, and **467** to determine whether they have been properly synchronized using an audio synchronization point generator (not shown). For example, the editor can observe (e.g., view and/or listen to) the audible sounds among band **472**, subset **474**, and subset **476** to determine whether they are sufficiently synchronized. If so, the editor can accept a post-capture synchronization point **473** by, for example, selecting an accept button ("A") **442** to generate an accept command. Otherwise, the selection of rejection button ("R") **444** causes the generation of a reject command to, for example, initialize the audio synchronization point generator to again try to find the proper post-capture synchronization point.

Interactive panel portion **406** can be configured to accept input from the editor to modify the operation of the audio synchronization point generator to reexamine the candidate synchronization point. For example, interactive panel portion **406** can include band size input field **420** to modify the size of one or more bands; a vicinity range input field **422** to modify the size of a vicinity range in which perform comparisons; a number of comparisons per band input field ("No. Comp/Band") **424** to change the number of audio samples per band (e.g., 80% of audio samples in a band) that are used to compare against specimen audio subsets; a tolerance range input field **426** to modify the number of deviant waveform values that can result in a match; and a number of confirmatory candidate synchronization points per certification of a post-capture synchronization point ("No. Confirm./SP") **428**, such as changing a threshold from 3 matches out of 5 confirmatory candidate synchronization points to, for example, 4 out of 5 to certify.

FIG. **5** is a flow diagram depicting one example of a method for synchronizing video and/or audio based on the generation of post-capture synchronization points, according to one embodiment of the invention. As shown, flow **500** begins at **502**, with an interface, a processor, an application and/or logic, generating a post-capture synchronization point at **504** as a function of a subject audio. Flow **500** analyzes an attribute of sound associated with the subject audio at **506**, and, at **508**, there is a determination whether the attribute of sound for subsets of the subject audio are substantially equivalent. If so, flow **500** generates a candidate synchronization point at **510**. In at least one embodiment, flow **500** certifies that the candidate synchronization point is a post-capture synchronization point at **512**. At **514**, at least two portions of video can be synchronized at (or substantially at) the post-capture synchronization point. Flow **500** terminates at **516**.

FIG. **6** is a flow diagram depicting another example of a method for synchronizing video and/or audio based on the generation of post-capture synchronization points, according to another embodiment of the invention. As shown, flow **600** begins at **602**, with an interface, a processor, an application and/or logic, designating that a content file from a plurality of content files includes a reference audio as a function of an amount of data at **604**. At **606**, the reference audio and a specimen audio can be extracted from content files in a repository. A portion of the reference audio is characterized in terms of an audio attribute at **608**. At **610**, an entity, such as an interface, a processor, an application, a circuit, and/or logic, implementing flow **600** determines whether the specimen audio includes the characterized portion of the reference audio. For example, flow **600** can search for a pattern of the audio attribute associated with the characterized portion of the reference audio within a subset of the specimen audio at **612** to determine a match. At **614**, flow **600** synchronizes video and/or audio portions at a synchronization point that is based on the reference audio and the specimen audio. Flow **600** terminates at **616**.

FIG. **7**A illustrates an example of a panel presentation application for implementing a multi-camera panel that presents audio tracks synchronized with the use of post-capture synchronization points, according to various embodiments of the invention. In at least one embodiment, an audio-based synchronization panel, an interactive panel for modifying operation of an audio synchronization point generator, and a multi-camera panel can be implemented in a panel, such as a single panel, in one or more portions thereof, or in separate panels. Here, application **702** includes interface ("I/F") module **704**, display module **706**, rendering engine **708**, repository **710**, logic module **712**, panel generator **714**, and data bus **716**. In some examples, the number and type of elements shown and described may be varied and are not limited to the descriptions provided. In some examples, the above-described elements can be implemented as part, component, or module of application **702**. As an example, application **702** can be implemented to include either commands for accepting or rejection audio track synchronization by a post-capture synchronization, or for modifying operation of an audio synchronization point generator, or both, the commands imparting functionalities as described herein. Logic module **712** can be implemented as software, hardware, circuitry, or a combination thereof to implement control logic for the described techniques for panel presentation.

In some examples, logic module **712** can be configured to control panel generator **714** to form a multi-camera panels that are configured to present audio tracks that are automatically synchronized based on subject audio. Rendering engine **708** can be configured to operate as a layout engine for web pages, for example, to manipulate both content (e.g., as expressed in or including HTML, XML, image files, etc.) and formatting information (e.g., as expressed in or including CSS, XSL, etc.) for rendering the data or information as one or more panels on interface **906** (FIG. **9**). Interface module **704** can exchange panel presentation data, including content data, image data, audio data, as well as other data, between application **702** and another application (e.g., a host, client,

web services-based, distributed (i.e., enterprise), application programming interface ("API"), operating system, program, procedure or others) that can use data and information generated from panel generator **714** to render presented panels on a display screen. In other examples, the above-described techniques and elements can be varied in design, implementation, and function and are not limited to the descriptions provided. In one embodiment, logic module **712** can include an audio synchronization point generator **790** that is configured to include structure and/or functionality similar to one or more previously-described audio synchronization point generators.

FIG. **7**B illustrates an alternative example of a panel presentation application for implementing a multi-camera panel that presents audio tracks synchronized with the use of post-capture synchronization points, according to one embodiment of the invention. Here, application **720** includes panel generator **722** and logic module **724**, which can have equivalent functionality as **712** of FIG. **7**A. Further, application **720** is shown in data communication with interface ("I/F") module **726**, display module **728**, rendering engine **730**, and repository **732**. Data bus **734** can be configured to send or receive data among application **720**, IN module **726**, display module **728**, rendering engine **730**, and repository **732**. In other examples, more, fewer or different elements can be used and implemented without limitation to the examples provided above.

In some examples, logic module **724** and panel generator **722** can be implemented as part of application **720**, which can be implemented separately from other functional components or modules, such as interface module **726**, display module **728**, rendering module **730**, and repository **732**. Data bus **734** can be implemented to communicate data over a given port between application **720** and interface module **726**, display module **728**, rendering module **730**, and repository **732**. In some instances, application **720** can be implemented as a standalone application or as a component (i.e., module) of another application. Data or information (e.g., content file data including either video data or audio data, or both, data for modifying the operation of the audio synchronization point generator, data for describing candidate and post-capture synchronization points, data for describing one or more audio attributes, and the like) associated with a panel can be stored in repository **732**, which can be implemented using a database, data store, data warehouse, or any other type of data repository or structure. In other examples, more, fewer, or different modules can be used to implement the described techniques for panel presentation and are not limited to those provided.

FIG. **8** illustrates an exemplary computer system suitable for implementing an interactive panel for an interface to modify the operation of an audio synchronization point generator, according to at least one embodiment of the invention. In some examples, computer system **800** can be used to implement computer programs, applications, methods, processes, or other software to perform the above-described techniques and to realize the structures described herein. Computer system **800** includes a bus **802** or other communication mechanism for communicating information, which interconnects subsystems and devices, such as processor **804**, system memory ("memory") **806**, storage device **808** (e.g., ROM), disk drive **810** (e.g., magnetic or optical), communication interface **812** (e.g., modem or Ethernet card), display **814** (e.g., CRT or LCD), input device **816** (e.g., keyboard), and pointer cursor control **818** (e.g., mouse or trackball). In one embodiment, pointer cursor control **818** invokes one or more specialized commands that, at least in part, accepts or rejects a post-capture synchronization point. Pointer cursor control **818** can interact via a pointer cursor with a multi-camera panel to manually synchronize audio tracks by moving the one or more tracks relative to a post-capture synchronization point.

According to some examples, computer system **800** performs specific operations in which processor **804** executes one or more sequences of one or more instructions stored in system memory **806**. Such instructions can be read into system memory **806** from another computer readable medium, such as static storage device **808** or disk drive **810**. In some examples, hard-wired circuitry can be used in place of or in combination with software instructions for implementation. In the example shown, system memory **806** includes modules of executable instructions for implementing an operation system ("O/S") **832**, an application **836**, and an audio synchronization point generation module **838**.

The term "computer readable medium" refers, at least in one embodiment, to any medium that participates in providing instructions to processor **804** for execution. Such a medium can take many forms, including but not limited to, non-volatile media, volatile media, and transmission media. Non-volatile media includes, for example, optical or magnetic disks, such as disk drive **810**. Volatile media includes dynamic memory, such as system memory **806**. Transmission media includes coaxial cables, copper wire, and fiber optics, including wires that comprise bus **802**. Transmission media can also take the form of acoustic or light waves, such as those generated during radio wave and infrared data communications.

Common forms of computer readable media includes, for example, floppy disk, flexible disk, hard disk, magnetic tape, any other magnetic medium, CD-ROM, any other optical medium, punch cards, paper tape, any other physical medium with patterns of holes, RAM, PROM, EPROM, FLASH-EPROM, any other memory chip or cartridge, carrier wave, or any other medium from which a computer can read.

In some examples, execution of the sequences of instructions can be performed by a single computer system **800**. According to some examples, two or more computer systems **800** coupled by communication link **820** (e.g., LAN, PSTN, or wireless network) can perform the sequence of instructions in coordination with one another. Computer system **800** can transmit and receive messages, data, and instructions, including program code (i.e., application code) through communication link **820** and communication interface **812**. Received program code can be executed by processor **804** as it is received, and/or stored in disk drive **810**, or other non-volatile storage for later execution. In one embodiment, system **800** is implemented as a hand-held device, such as a mobile phone **850**. But in other embodiments, system **800** can be implemented as a personal computer (i.e., a desk top computer) or any other computing device.

FIG. **9** illustrates an example of a panel presentation system for editing video clips associated with post-capture synchronization points for a reference audio and a specimen audio, according to various embodiment of the invention. Here, system **900** includes network **902**, display environment **904**, interface **906**, which can be presented on devices such as computer **908**, notebook computer ("notebook" or "laptop") **910**, smart phone **912**, personal digital assistant ("PDA") **914**, server **916**, and administrator computer **918**. In other examples, the number and type of devices can be varied and are not limited to those shown and described.

In some examples, one or more panels for synchronizing video can be presented on interface **906**, which can be an interface for an application, such as a video and audio editing

application, or as a web browsing program, Internet content portal, client or desktop application for any purpose. Panels can be used to provide additional or supplemental information that can be contextually relevant to another panel presented in interface **906**. Computer **908**, notebook computer ("notebook" or "laptop") **910**, smart phone **912**, personal digital assistant ("PDA") **914**, server **916**, and administrator computer **918** can provide content data for rendering content as well as other data, which can be implemented to generate, for example, post-capture synchronization points and/or synchronized audio tracks in interface **906**. In some cases, an operating system installed on computer **908** can communicate (i.e., via an application programming interface ("API")) content data and/or other related data to another application installed on computer **908** to render (i.e., interpreting data and information to draw or display the content in an interface) one or more panels presented in interface **906**. In some examples, different types of panels can be rendered in interface **906**. In one embodiment, interface **906** can include any number and/or any type of display environments, such as CRT and LCD displays. Note that the above-described system and elements can be varied and are not limited to the descriptions or examples provided.

In at least some of the embodiments of the invention, the structures and/or functions of any of the above-described interfaces and panels can be implemented in software, hardware, firmware, circuitry, or a combination thereof. Note that the structures and constituent elements shown in FIGS. **7**A to **9**, as well as their functionality, can be aggregated with one or more other structures or elements. Alternatively, the elements and their functionality can be subdivided into constituent sub-elements, if any. As software, the above-described described techniques can be implemented using various types of programming or formatting languages, frameworks, syntax, applications, protocols, objects, or techniques, including C, Objective C, C++, C#, Flex™, Fireworks®, Java™, Javascript™, AJAX, COBOL, Fortran, ADA, XML, HTML, DHTML, XHTML, HTTP, XMPP, and others. These can be varied and are not limited to the examples or descriptions provided.

The foregoing description, for purposes of explanation, used specific nomenclature to provide a thorough understanding of the invention. However, it will be apparent to one skilled in the art that specific details are not required in order to practice the invention. In fact, this description should not be read to limit any feature or aspect of the present invention to any embodiment; rather features and aspects of one embodiment can readily be interchanged with other embodiments.

Thus, the foregoing descriptions of specific embodiments of the invention are presented for purposes of illustration and description. They are not intended to be exhaustive or to limit the invention to the precise forms disclosed; many alternatives, modifications, equivalents, and variations are possible in view of the above teachings. For the purpose of clarity, technical material that is known in the technical fields related to the embodiments has not been described in detail to avoid unnecessarily obscuring the description. Thus, the various embodiments can be modified within the scope and equivalents of the appended claims. Further, the embodiments were chosen and described in order to best explain the principles of the invention and its practical applications; they thereby enable others skilled in the art to best utilize the invention and various embodiments with various modifications as are suited to the particular use contemplated. Notably, not every benefit described herein need be realized by each embodiment of the present invention; rather any specific embodiment can provide one or more of the advantages discussed above. In the claims, elements and/or operations do not imply any particular order of operation, unless explicitly stated in the claims. It is intended that the following claims and their equivalents define the scope of the invention.

What is claimed:

1. A non-transitory computer readable medium storing executable instructions which, when executed by a computer, cause the computer to:

generate a post-capture synchronization point as a function of a subject audio, the post-capture synchronization point specifying equivalent portions of the subject audio, wherein to generate the post-capture synchronization point the executable instructions generate a candidate synchronization point with which to establish the post-capture synchronization point, and to generate the candidate synchronization point the executable instructions:

analyze an attribute of sound associated with multiple audio tracks of the subject audio; and

determine whether the attribute of sound for the multiple audio tracks of the subject audio is substantially equivalent; and

synchronize at least two portions of video substantially at the post-capture synchronization point,

wherein the two portions of video are each captured at different multiple capture devices.

2. The non-transitory computer readable medium of claim **1**, wherein the executable instructions to generate the post-capture synchronization point are configured to execute after the two portions of video are captured.

3. The non-transitory computer readable medium of claim **1**, wherein to synchronize the at least two portions of video excludes implementing external synchronization information.

4. The non-transitory computer readable medium of claim **1**, wherein to determine whether the attribute of sound for the multiple audio tracks of the subject audio is substantially equivalent, the executable instructions:

compare waveform amplitudes of subsets of the multiple audio tracks of the subject audio; and

match the waveform amplitudes to form at least the candidate synchronization point.

5. The non-transitory computer readable medium of claim **1**, wherein to determine whether the attribute of sound for the multiple audio tracks of the subject audio is substantially equivalent, the executable instructions:

compare waveform frequencies of subsets of the multiple audio tracks of the subject audio; and

match waveform frequencies to form at least the candidate synchronization point.

6. The non-transitory computer readable medium of claim **1**, further comprising executable instructions which, when executed by the computer, cause the computer to:

certify that the candidate synchronization point is useable as the post-capture synchronization point to synchronize the at least two portions of video.

7. The non-transitory computer readable medium of claim **6**, wherein to certify, the executable instructions:

identify additional subsets of the multiple audio tracks of the subject audio for each of the two portions of video, the additional subsets defining points of reference;

select other subsets of the multiple audio tracks of the subject audio at approximately the same amount of time units from the additional subsets;

analyze an attribute of sound associated with the other subsets of the multiple audio tracks of the subject audio; and

determine whether the attribute of sound for the other subsets of the multiple audio tracks of the subject audio is substantially equivalent.

8. The non-transitory computer readable medium of claim **1**, wherein to synchronize the two portions of video excludes implementing either a synchronization signal or an artificial sound, or both.

9. A non-transitory computer readable medium storing executable instructions which, when executed by a computer, cause the computer to:

extract a reference audio and a specimen audio from content files in a repository;

characterize a portion of the reference audio in terms of an audio attribute to form a characterized portion of the reference audio;

determine whether the specimen audio includes the characterized portion of the reference audio to form a synchronization point; and

synchronize video clips associated with the reference audio and the specimen audio substantially at the synchronization point.

10. The non-transitory computer readable medium of claim **9**, wherein the reference audio and the specimen audio include subject audio.

11. The non-transitory computer readable medium of claim **9**, further comprising executable instructions which, when executed by the computer, cause the computer to:

edit the video clips associated with the reference audio and the specimen audio to form a video; and

implement as audible sound either the reference audio or the specimen audio, or both, in association with the video.

12. The non-transitory computer readable medium of claim **9**, further comprising executable instructions which, when executed by the computer, cause the computer to:

synchronize the video clips based on the synchronization point for the reference audio and the specimen audio.

13. The non-transitory computer readable medium of claim **9**, further comprising executable instructions which, when executed by the computer, cause the computer to:

designate a content file of a plurality of content files as including the reference audio as a function of an amount of data associated with the content file.

14. The non-transitory computer readable medium of claim **9**, wherein to determine whether the specimen audio includes the characterized portion of the reference audio, the executable instructions:

characterize other portions of the reference audio to form other characterized portions of the reference audio; and

confirm that the specimen audio includes the other characterized portions of the reference audio.

15. The non-transitory computer readable medium of claim **9**, further comprising executable instructions which, when executed by a computer, cause the computer to:

define a portion of the specimen audio as a vicinity range;

determine an alignment point for the portion of the reference audio; and

align the vicinity range at the alignment point.

16. The non-transitory computer readable medium of claim **9**, wherein to determine whether the specimen audio includes the characterized portion of the reference audio, the executable instructions:

search for a pattern of the audio attribute associated with the characterized portion of the reference audio within a portion of the specimen audio;

establish a tolerance range for the pattern within which the portion of the specimen audio matches the pattern; and

generate a candidate synchronization point if at least a part of the portion of the specimen audio is within the tolerance range.

17. A device comprising:

a panel generator configured to generate one or more panels depicting audio-based synchronization points for synchronizing video; and

an audio synchronization point generator comprising:

a sound attribute analyzer configured to:

analyze waveform amplitudes associated with a first audio track and a second audio track that include a subject audio, and

a candidate synchronization point detector configured to:

detect that a portion of the first audio track and a portion of the second audio track includes substantially equivalent patterns of the waveform amplitudes.

18. The device of claim **17** wherein the audio synchronization point generator is configured to:

synchronize video clips based on the first audio track and the second audio track without synchronization information external to the subject audio.

19. The device of claim **17** wherein the panel generator is further configured to:

present an interactive panel configured to accept synchronization point generation parameters for governing the operation of the audio synchronization point generator.

20. A system comprising:

a memory configured to store instructions and data associated with storing a reference audio and a specimen audio from content files; and

logic configured to:

characterize a portion of the reference audio in terms of an audio attribute to form a characterized portion of the reference audio;

determine whether the specimen audio includes the characterized portion of the reference audio to form a synchronization point; and

synchronize video clips associated with the reference audio and the specimen audio substantially at the synchronization point.

21. A system, comprising:

a memory configured to store instructions and data associated with generating a candidate synchronization point as a function of a subject audio; and

a processor configured to:

generate a post-capture synchronization point as a function of a subject audio, the post-capture synchronization point specifying equivalent portions of the subject audio, wherein to generate the post-capture synchronization point the processor is configured to generate a candidate synchronization point with which to establish the post-capture synchronization point, and to generate the candidate synchronization point the processor is configured to:

analyze an attribute of sound associated with multiple audio tracks of the subject audio; and

determine whether the attribute of sound for the multiple audio tracks of the subject audio is substantially equivalent; and

synchronize at least two portions of video substantially at the post-capture synchronization point,

wherein the two portions of video are each captured at different multiple capture devices.

22. A method comprising:

extracting a reference audio and a specimen audio from content files in a repository;

characterizing a portion of the reference audio in terms of an audio attribute to form a characterized portion of the reference audio;

determining that the specimen audio includes the characterized portion of the reference audio to form a synchronization point; and

synchronizing video clips associated with the reference audio and the specimen audio substantially at the synchronization point.

23. A method, comprising:

generating a post-capture synchronization point as a function of a subject audio, the post-capture synchronization point specifying equivalent portions of the subject audio, wherein generating the post-capture synchronization point comprises generating a candidate synchronization point with which to establish the post-capture synchronization point;

certifying that the candidate synchronization point is useable as the post-capture synchronization point to synchronize the at least two portions of video; and

synchronizing at least two portions of video substantially at the post-capture synchronization point,

wherein the two portions of video are each captured at different multiple capture devices.

* * * * *