Petitioner's Demonstratives

Netflix, Inc. v. GoTV Streaming, LLC
U.S. Patent Nos. 8,989,715 & 8,478,245
IPR2023-00757 & -00758

August 6, 2024

Instituted Grounds

’715 Patent		
Challenged Claims	**Basis**	**References**
1-20	§ 103(a)	Hariki, Harris

’245 Patent		
Challenged Claims	**Basis**	**References**
1-33	§ 103(a)	Hariki, Harris

’715: Pet. at 2; ID at 19, 106.
’245: Pet. at 2; ID at 19, 106.

Disputed Issues

1. Hariki's UI content package is associated with the web server application and is applied to render content in a manner customized to that application
2. "Application" should not be narrowed to "Remote Application"
3. HTML is generated in part from execution of Hariki/Harris' web browser
4. Hariki's UI content package is applicable to HTML within the web browser
5. Hariki's web server application resides with a UI Authoring Tool on a server as a library
6. Harris's MCF is a layout solver that generates and transmits HTML files
7. No objective indicia of non-obviousness
8. Hariki's engines read HTML files sent to a wireless device

U.S. Patent. No. 8,989,715

’715

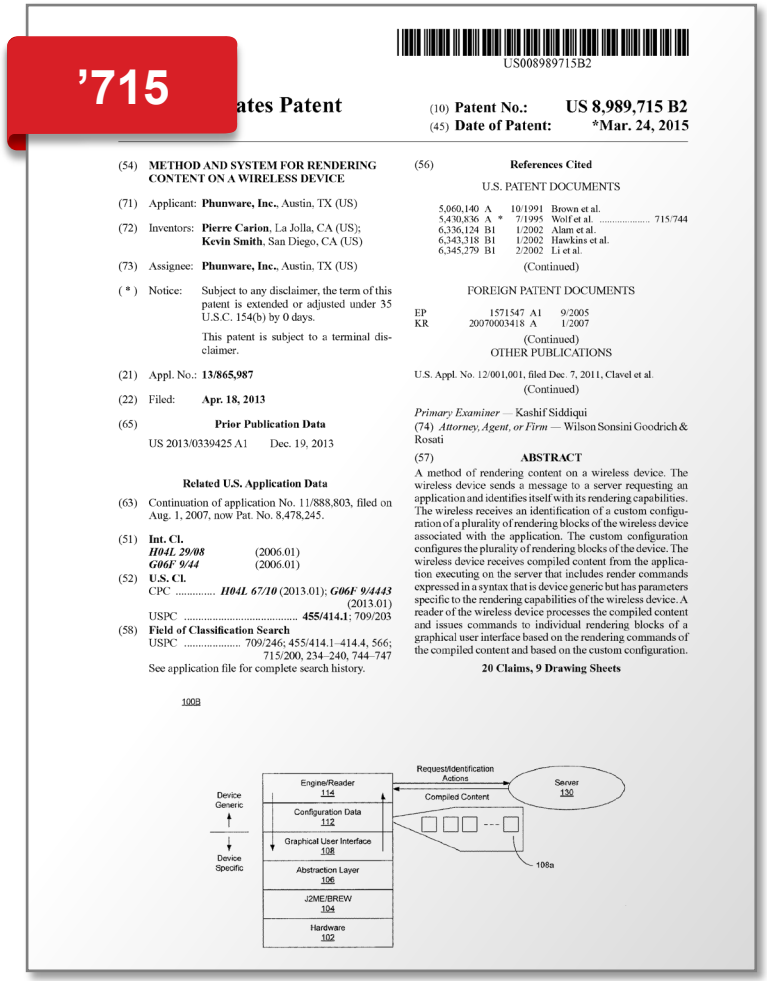

US008989715B2

ates Patent

(10) Patent No.: US 8,989,715 B2
(45) Date of Patent: *Mar. 24, 2015

(54) METHOD AND SYSTEM FOR RENDERING CONTENT ON A WIRELESS DEVICE

(71) Applicant: Phunware, Inc., Austin, TX (US)

(72) Inventors: Pierre Carion, La Jolla, CA (US); Kevin Smith, San Diego, CA (US)

(73) Assignee: Phunware, Inc., Austin, TX (US)

(*) Notice: Subject to any disclaimer, the term of this patent is extended or adjusted under 35 U.S.C. 154(b) by 0 days.

This patent is subject to a terminal disclaimer.

(21) Appl. No.: 13/865,987

(22) Filed: Apr. 18, 2013

(65) Prior Publication Data

US 2013/0339425 A1 Dec. 19, 2013

Related U.S. Application Data

(63) Continuation of application No. 11/888,803, filed on Aug. 1, 2007, now Pat. No. 8,478,245.

(51) Int. Cl.
H04L 29/08 (2006.01)
G06F 9/44 (2006.01)

(52) U.S. Cl.
CPC *H04L 67/10* (2013.01); *G06F 9/4443* (2013.01)
USPC 455/414.1; 709/203

(58) Field of Classification Search
USPC 709/246; 455/414.1–414.4, 566; 715/200, 234–240, 744–747
See application file for complete search history.

(56) References Cited

U.S. PATENT DOCUMENTS

5,060,140 A 10/1991 Brown et al.
5,430,836 A * 7/1995 Wolf et al. 715/744
6,336,124 B1 1/2002 Alam et al.
6,343,318 B1 1/2002 Hawkins et al.
6,345,279 B1 2/2002 Li et al.

(Continued)

FOREIGN PATENT DOCUMENTS

EP 1571547 A1 9/2005
KR 20070003418 A 1/2007

(Continued)

OTHER PUBLICATIONS

U.S. Appl. No. 12/001,001, filed Dec. 7, 2011, Clavel et al.

(Continued)

Primary Examiner — Kashif Siddiqui
(74) *Attorney, Agent, or Firm* — Wilson Sonsini Goodrich & Rosati

(57) ABSTRACT

A method of rendering content on a wireless device. The wireless device sends a message to a server requesting an application and identifies itself with its rendering capabilities. The wireless receives an identification of a custom configuration of a plurality of rendering blocks of the wireless device associated with the application. The custom configuration configures the plurality of rendering blocks of the device. The wireless device receives compiled content from the application executing on the server that includes render commands expressed in a syntax that is device generic but has parameters specific to the rendering capabilities of the wireless device. A reader of the wireless device processes the compiled content and issues commands to individual rendering blocks of a graphical user interface based on the rendering commands of the compiled content and based on the custom configuration.

20 Claims, 9 Drawing Sheets

100B

(10) **Patent No.: US 8,989,715 B2**

(54) **METHOD AND SYSTEM FOR RENDERING CONTENT ON A WIRELESS DEVICE**

(63) Continuation of application No. 11/888,803, filed on Aug. 1, 2007, now Pat. No. 8,478,245.

As such, the effective priority date of the Patent-at-Issue is August 1, 2007, and its patentability should be judged under the pre-AIA statutes.

POPR at 2

’715: EX1001 at (10), (54), (63); Pet. at 18; POPR at 2.

U.S. Patent. No. 8,478,245

’245

US008478245B2

tates Patent

(10) Patent No.: US 8,478,245 B2
(45) Date of Patent: Jul. 2, 2013

(54) METHOD AND SYSTEM FOR RENDERING CONTENT ON A WIRELESS DEVICE

(75) Inventors: Pierre Carion, La Jolla, CA (US); Kevin Smith, San Diego, CA (US)

(73) Assignee: Phunware, Inc., Austin, TX (US)

(*) Notice: Subject to any disclaimer, the term of this patent is extended or adjusted under 35 U.S.C. 154(b) by 1638 days.

(21) Appl. No.: 11/888,803

(22) Filed: Aug. 1, 2007

(65) Prior Publication Data

US 2009/0036105 A1 Feb. 5, 2009

(51) Int. Cl.
H04M 3/42 (2006.01)
H04M 1/00 (2006.01)

(52) U.S. Cl.
USPC 455/414.1; 715/234; 715/744

(58) Field of Classification Search
USPC 709/246; 455/414.1–414.4, 566; 715/200, 715/234–240, 744–747
See application file for complete search history.

(56) References Cited

U.S. PATENT DOCUMENTS

5,060,140	A	10/1991	Brown et al.	
5,430,836	A *	7/1995	Wolf et al.	715/744
6,336,124	B1	1/2002	Alam et al.	
6,343,318	B1	1/2002	Hawkins et al.	
6,345,279	B1	2/2002	Li et al.	
6,457,030	B1	9/2002	Adams et al.	
6,490,627	B1	12/2002	Kalra et al.	
6,795,710	B1	9/2004	Creemer	
6,884,172	B1	4/2005	Lloyd et al.	463/42
6,996,537	B2	2/2006	Minear et al.	
7,222,154	B2	5/2007	Dowling	
7,286,562	B1	10/2007	Vargo et al.	
7,506,070	B2	3/2009	Tran et al.	
7,568,201	B2	7/2009	Suryanarayana et al.	
7,580,703	B1	8/2009	Veselov et al.	
7,599,665	B2	10/2009	Sinivaara	

(Continued)

FOREIGN PATENT DOCUMENTS

EP	1571547	A1	9/2005
KR	1020070003418	A	1/2007
KR	1020080022697	A	3/2008
WO	02103963		12/2002

OTHER PUBLICATIONS

Grundy, John et al; “An Architecture for Building Multi-device Thin-Client Web User Interfaces” Advanced Information Systems Engineering, vol. 2348/2002, Jan. 1, 2002, pp. 728-732, XP002511217.

(Continued)

Primary Examiner — Kashif Siddiqui
(74) *Attorney, Agent, or Firm* — Wilson Sonsini Goodrich & Rosati

(57) ABSTRACT

A method of rendering content on a wireless device. The wireless device sends a message to a server requesting an application and identifies itself with its rendering capabilities. The wireless receives an identification of a custom configuration of a plurality of rendering blocks of the wireless device associated with the application. The custom configuration configures the plurality of rendering blocks of the device. The wireless device receives compiled content from the application executing on the server that includes render commands expressed in a syntax that is device generic but has parameters specific to the rendering capabilities of the wireless device. A reader of the wireless device processes the compiled content and issues commands to individual rendering blocks of a graphical user interface based on the rendering commands of the compiled content and based on the custom configuration.

33 Claims, 9 Drawing Sheets

100A

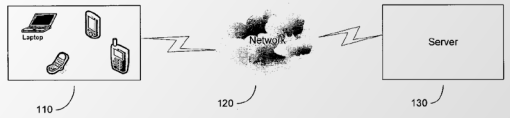

(10) **Patent No.: US 8,478,245 B2**

(54) **METHOD AND SYSTEM FOR RENDERING CONTENT ON A WIRELESS DEVICE**

(22) Filed: **Aug. 1, 2007**

The Patent-at-Issue was filed on August 1, 2007 and does not claim priority to an earlier application. Ex. 1001 at (22). As such, the effective priority date is the filing date, and the Patent-at-Issue’s patentability should be judged under the pre-AIA statutes.

POPR at 2

’245: EX1001 at (10), (22), (54); Pet. at 17; POPR at 2.

’715/’245 Patents – Problem to be Solved

’715

US008989715B2

tes Patent

(10) Patent No.: US 8,989,715 B2
(45) Date of Patent: *Mar. 24, 2015

(54) METHOD AND SYSTEM FOR RENDERING CONTENT ON A WIRELESS DEVICE

(71) Applicant: Phunware, Inc., Austin, TX (US)

(72) Inventors: Pierre Carion, La Jolla, CA (US); Kevin Smith, San Diego, CA (US)

(73) Assignee: Phunware, Inc., Austin, TX (US)

(*) Notice: Subject to any disclaimer, the term of this patent is extended or adjusted under 35 U.S.C. 154(b) by 0 days.

This patent is subject to a terminal disclaimer.

(21) Appl. No.: 13/865,987

(22) Filed: Apr. 18, 2013

(65) Prior Publication Data

US 2013/0339425 A1 Dec. 19, 2013

Related U.S. Application Data

(63) Continuation of application No. 11/888,803, filed on Aug. 1, 2007, now Pat. No. 8,478,245.

(51) Int. Cl.
H04L 29/08 (2006.01)
G06F 9/44 (2006.01)

(52) U.S. Cl.
CPC *H04L 67/10* (2013.01); *G06F 9/4443* (2013.01)
USPC 455/414.1; 709/203

(58) Field of Classification Search
USPC 709/246; 455/414.1–414.4, 566; 715/200, 234–240, 744–747
See application file for complete search history.

(56) References Cited

U.S. PATENT DOCUMENTS

5,060,140	A	10/1991	Brown et al.	
5,430,836	A *	7/1995	Wolf et al.	715/744
6,336,124	B1	1/2002	Alam et al.	
6,343,318	B1	1/2002	Hawkins et al.	
6,345,279	B1	2/2002	Li et al.	

(Continued)

FOREIGN PATENT DOCUMENTS

EP	1571547	A1	9/2005
KR	20070003418	A	1/2007

(Continued)

OTHER PUBLICATIONS

U.S. Appl. No. 12/001,001, filed Dec. 7, 2011, Clavel et al.

(Continued)

Primary Examiner — Kashif Siddiqui
(74) *Attorney, Agent, or Firm* — Wilson Sonsini Goodrich & Rosati

(57) ABSTRACT

A method of rendering content on a wireless device. The wireless device sends a message to a server requesting an application and identifies itself with its rendering capabilities. The wireless receives an identification of a custom configuration of a plurality of rendering blocks of the wireless device associated with the application. The custom configuration configures the plurality of rendering blocks of the device. The wireless device receives compiled content from the application executing on the server that includes render commands expressed in a syntax that is device generic but has parameters specific to the rendering capabilities of the wireless device. A reader of the wireless device processes the compiled content and issues commands to individual rendering blocks of a graphical user interface based on the rendering commands of the compiled content and based on the custom configuration.

20 Claims, 9 Drawing Sheets

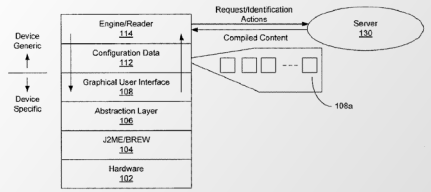

Diverse wireless device platforms required multiple, tailored versions of an application

Accordingly, a need has arisen to enable software vendors to provide generic applications regardless of the wireless device type, thereby relieving software vendors from having to tailor their applications for each given wireless device type. Moreover, a need has arisen to not only relieve software vendors from tailoring their applications for a given wireless device type but to provide an output that is device specific based on the wireless device attributes where the output is generated from a generic application. Furthermore, it is advantageous to update and patch various applications without a need to access each wireless device individually. It will become apparent to those skilled in the art after reading the detailed description of the present invention that the embodiments of the present invention satisfy the above mentioned needs.

’715 Patent at 2:18-32

’715: EX1001 at 2:18-32; Pet. at 12-17.
’245: EX1001 at 2:21-35; Pet. at 12-16.

Patents' Solution – Generic Application & Custom Configuration

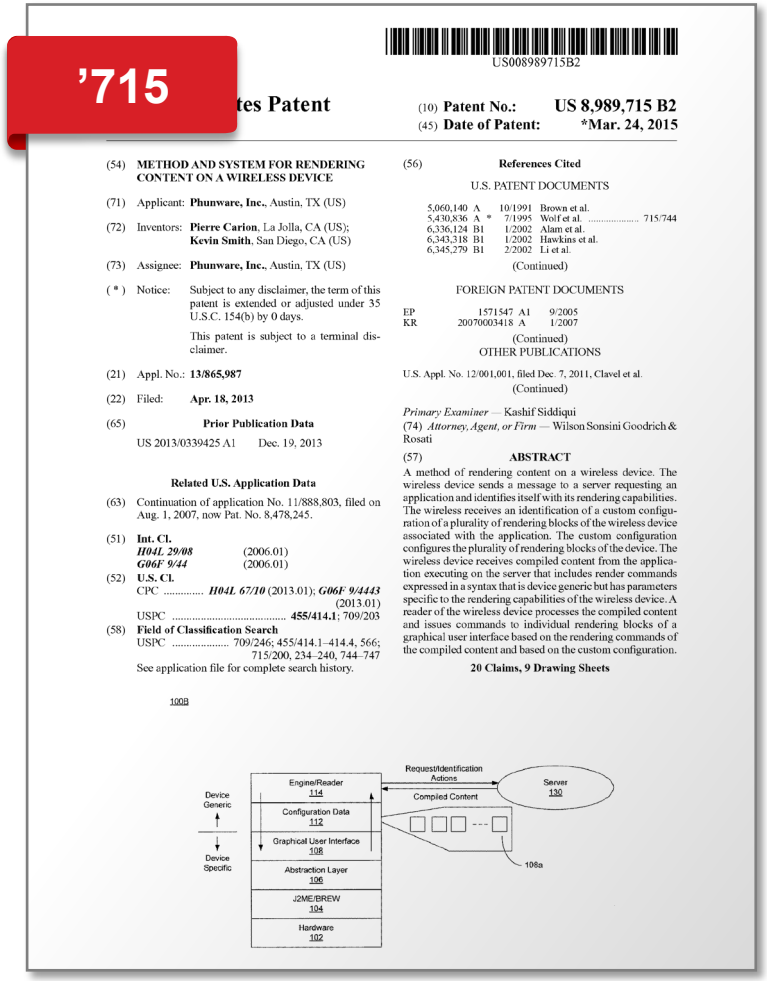

'715

US008989715B2

tes Patent

(10) Patent No.: US 8,989,715 B2
(45) Date of Patent: *Mar. 24, 2015

(54) METHOD AND SYSTEM FOR RENDERING CONTENT ON A WIRELESS DEVICE

(71) Applicant: Phunware, Inc., Austin, TX (US)

(72) Inventors: Pierre Carion, La Jolla, CA (US); Kevin Smith, San Diego, CA (US)

(73) Assignee: Phunware, Inc., Austin, TX (US)

(*) Notice: Subject to any disclaimer, the term of this patent is extended or adjusted under 35 U.S.C. 154(b) by 0 days.

This patent is subject to a terminal disclaimer.

(21) Appl. No.: 13/865,987

(22) Filed: Apr. 18, 2013

(65) Prior Publication Data

US 2013/0339425 A1 Dec. 19, 2013

Related U.S. Application Data

(63) Continuation of application No. 11/888,803, filed on Aug. 1, 2007, now Pat. No. 8,478,245.

(51) Int. Cl.
H04L 29/08 (2006.01)
G06F 9/44 (2006.01)

(52) U.S. Cl.
CPC *H04L 67/10* (2013.01); *G06F 9/4443* (2013.01)
USPC 455/414.1; 709/203

(58) Field of Classification Search
USPC 709/246; 455/414.1–414.4, 566; 715/200, 234–240, 744–747
See application file for complete search history.

(56) References Cited

U.S. PATENT DOCUMENTS

5,060,140	A	10/1991	Brown et al.	
5,430,836	A *	7/1995	Wolf et al.	715/744
6,336,124	B1	1/2002	Alam et al.	
6,343,318	B1	1/2002	Hawkins et al.	
6,345,279	B1	2/2002	Li et al.	

(Continued)

FOREIGN PATENT DOCUMENTS

EP	1571547	A1	9/2005
KR	20070003418	A	1/2007

(Continued)

OTHER PUBLICATIONS

U.S. Appl. No. 12/001,001, filed Dec. 7, 2011, Clavel et al.

(Continued)

Primary Examiner — Kashif Siddiqui
(74) *Attorney, Agent, or Firm* — Wilson Sonsini Goodrich & Rosati

(57) ABSTRACT

A method of rendering content on a wireless device. The wireless device sends a message to a server requesting an application and identifies itself with its rendering capabilities. The wireless receives an identification of a custom configuration of a plurality of rendering blocks of the wireless device associated with the application. The custom configuration configures the plurality of rendering blocks of the device. The wireless device receives compiled content from the application executing on the server that includes render commands expressed in a syntax that is device generic but has parameters specific to the rendering capabilities of the wireless device. A reader of the wireless device processes the compiled content and issues commands to individual rendering blocks of a graphical user interface based on the rendering commands of the compiled content and based on the custom configuration.

20 Claims, 9 Drawing Sheets

100B

Content compiled by a generic application is used at the client to render a tailored display

In response to the message from the wireless device, the server accesses the requested application by accessing a library of applications. The library of applications contains generic applications that on one level operate regardless of the device type. The requested application is executed on the server. Moreover, the server may identify a custom configuration to be used for the requested application and the device type. The custom configuration is the theme and determines certain graphical appearances of the requested application. In other words, the custom configuration provides the "look and feel" of the content of the requested application. The server may send a message to the wireless device identifying the custom configuration to be used. If the identified custom configuration is present on the wireless device it is used locally, otherwise the identified custom configuration is downloaded from the server to the wireless device. The custom configuration is specific to the display and audio capabilities of the wireless device and is also specific to the wireless device.

'715 Patent at 3:4-23

'715: EX1001 at 3:4-23; Pet. at 12-17.
'245: EX1001 at 3:7-25; Pet. at 12-16.

Patents' Solution – Generic Application & Custom Configuration

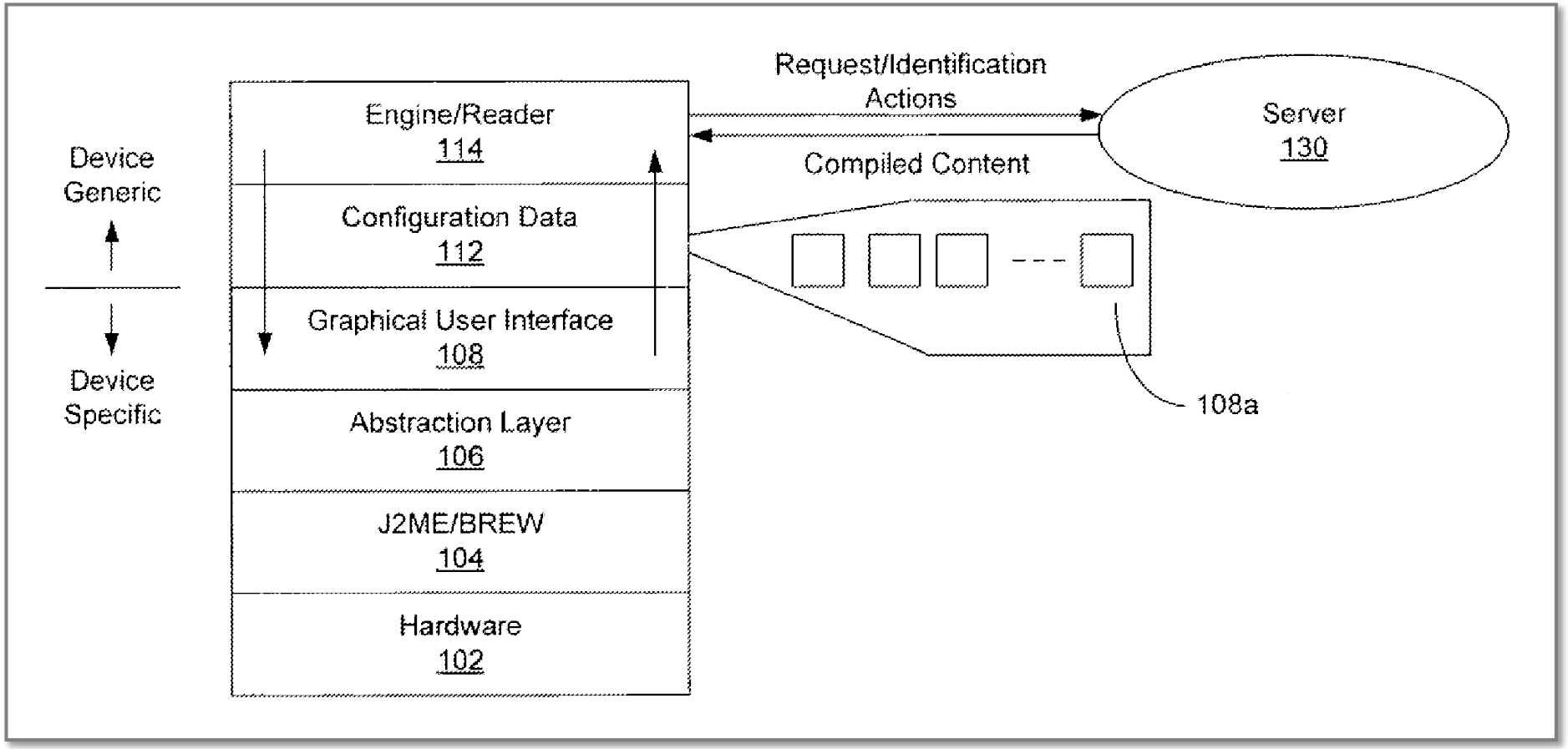

'715 Patent at Fig. 1B

'715: EX1001 at Fig. 1B; Pet. at 12-17.
'245: EX1001 at Fig. 1B; Pet. at 12-16.

The Patents Claim Well-Known Technology

Bederson
Petitioner's Expert

56. The relationship between "clients" and "servers" is so foundational to the history of computers that it is often used to define the nature of the computing architecture as well as the user experience. The state of the client-side computing

Bederson Decl. at ¶ 56

57. *Sinha* also explains that as far back as 1992, it was common to have the GUI of an application displayed on a computer remote from the application. It describes the X Window System that commonly ran on Unix environments which "provides network transparency so that an application displaying a chart on a screen could be running on a local machine or a remote machine thousands of miles away." *Id.*, p. 91.

Bederson Decl. at ¶ 57

EX1002 at ¶¶ 56-57; Pet. at 8-9.

U.S. Patent Application Publication No. 2007/0150617 (“Hariki”)

“Hariki”

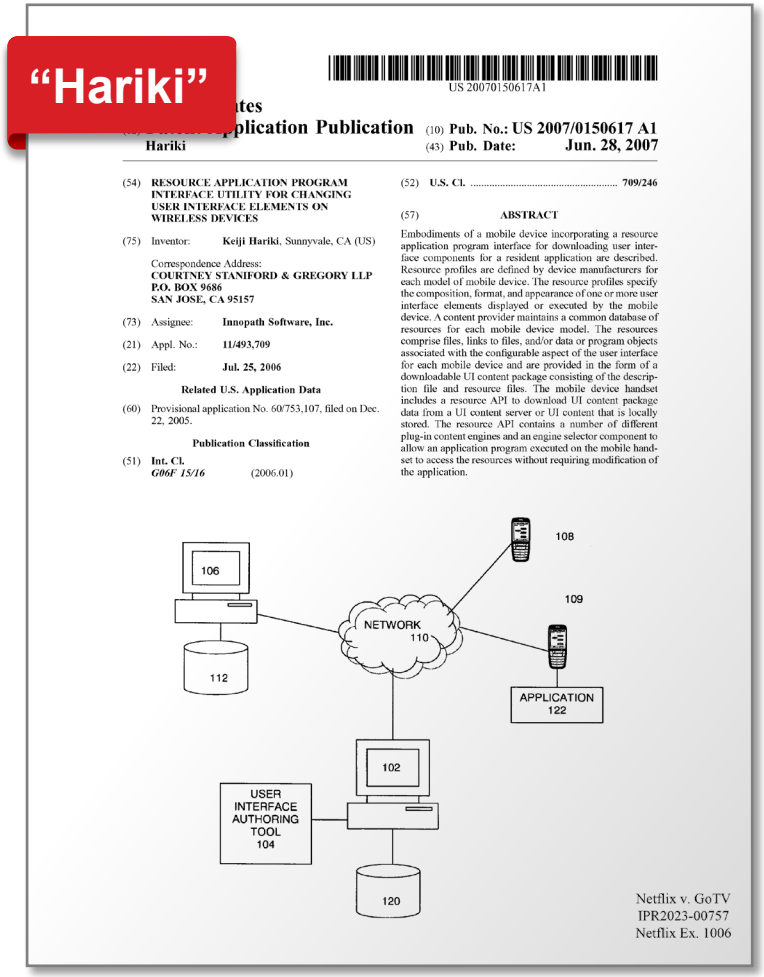

US 20070150617A1

tes
plication Publication
Hariki

(10) Pub. No.: US 2007/0150617 A1
(43) Pub. Date: Jun. 28, 2007

(54) RESOURCE APPLICATION PROGRAM INTERFACE UTILITY FOR CHANGING USER INTERFACE ELEMENTS ON WIRELESS DEVICES

(75) Inventor: Keiji Hariki, Sunnyvale, CA (US)

Correspondence Address:
COURTNEY STANIFORD & GREGORY LLP
P.O. BOX 9686
SAN JOSE, CA 95157

(73) Assignee: Innopath Software, Inc.

(21) Appl. No.: 11/493,709

(22) Filed: Jul. 25, 2006

Related U.S. Application Data

(60) Provisional application No. 60/753,107, filed on Dec. 22, 2005.

Publication Classification

(51) Int. Cl.
G06F 15/16 (2006.01)

(52) U.S. Cl. 709/246

(57) ABSTRACT

Embodiments of a mobile device incorporating a resource application program interface for downloading user interface components for a resident application are described. Resource profiles are defined by device manufacturers for each model of mobile device. The resource profiles specify the composition, format, and appearance of one or more user interface elements displayed or executed by the mobile device. A content provider maintains a common database of resources for each mobile device model. The resources comprise files, links to files, and/or data or program objects associated with the configurable aspect of the user interface for each mobile device and are provided in the form of a downloadable UI content package consisting of the description file and resource files. The mobile device handset includes a resource API to download UI content package data from a UI content server or UI content that is locally stored. The resource API contains a number of different plug-in content engines and an engine selector component to allow an application program executed on the mobile handset to access the resources without requiring modification of the application.

Netflix v. GoTV
IPR2023-00757
Netflix Ex. 1006

(10) **Pub. No.: US 2007/0150617 A1**

(54) **RESOURCE APPLICATION PROGRAM INTERFACE UTILITY FOR CHANGING USER INTERFACE ELEMENTS ON WIRELESS DEVICES**

(43) **Pub. Date: Jun. 28, 2007**

(60) Provisional application No. 60/753,107, filed on Dec. 22, 2005.

’715: EX1006 at (10), (43), (54), (60).
’245: EX1005 at (10), (43), (54), (60).

Overview of Hariki

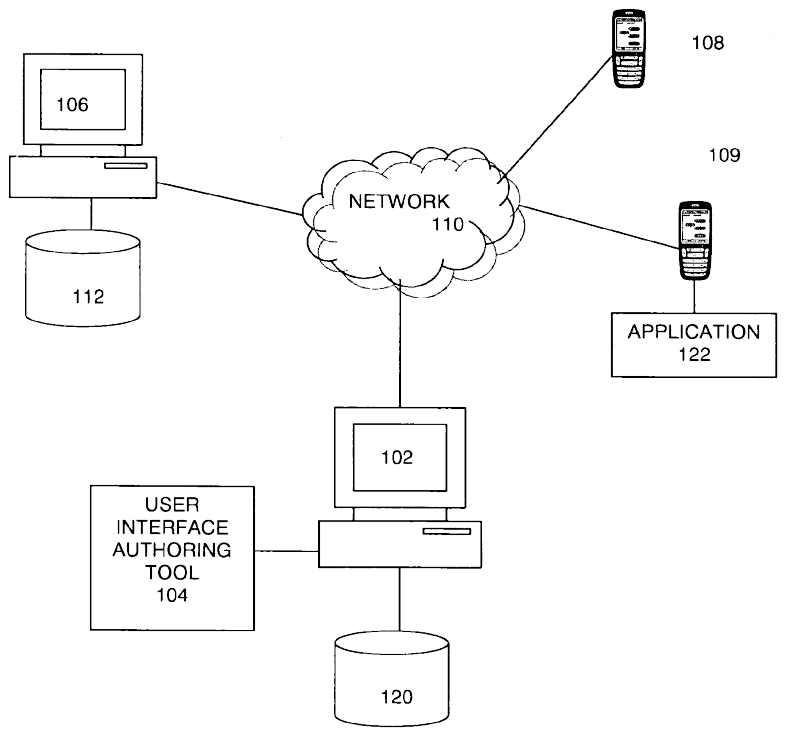

FIGURE 1

- Hariki discloses a user interface authoring tool 104 and a resource application programming interface (API) on a mobile device

- Server 102 "can be a World-Wide Web (WWW) server that stores data in the form of web pages and transmits these pages as Hypertext Markup Language (HTML) files over the Internet 110."

Hariki at ¶¶ 20, 21, 24

'715: EX1006 at ¶¶ 20, 21, 24; Pet. at 19-21.
'245: EX1005 at ¶¶ 20, 21, 24; Pet. at 18-20.

U.S. Patent Application Publication No. 2003/0023755 (“Harris”)

“Harris”

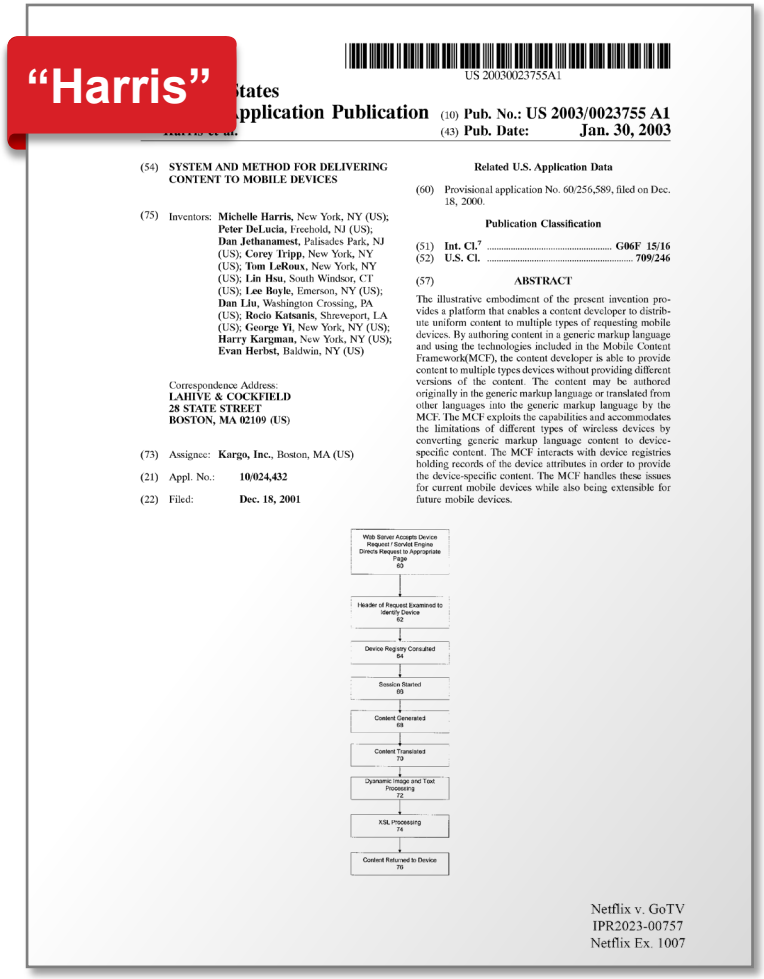

US 20030023755A1

States
Application Publication (10) Pub. No.: US 2003/0023755 A1
(43) Pub. Date: Jan. 30, 2003

(54) SYSTEM AND METHOD FOR DELIVERING CONTENT TO MOBILE DEVICES

(75) Inventors: **Michelle Harris**, New York, NY (US); **Peter DeLucia**, Freehold, NJ (US); **Dan Jethanamest**, Palisades Park, NJ (US); **Corey Tripp**, New York, NY (US); **Tom LeRoux**, New York, NY (US); **Lin Hsu**, South Windsor, CT (US); **Lee Boyle**, Emerson, NY (US); **Dan Liu**, Washington Crossing, PA (US); **Rocio Katsanis**, Shreveport, LA (US); **George Yi**, New York, NY (US); **Harry Kargman**, New York, NY (US); **Evan Herbst**, Baldwin, NY (US)

Correspondence Address:
LAHIVE & COCKFIELD
28 STATE STREET
BOSTON, MA 02109 (US)

(73) Assignee: **Kargo, Inc.**, Boston, MA (US)

(21) Appl. No.: **10/024,432**

(22) Filed: **Dec. 18, 2001**

Related U.S. Application Data

(60) Provisional application No. 60/256,589, filed on Dec. 18, 2000.

Publication Classification

(51) **Int. Cl.**[7] **G06F 15/16**
(52) **U.S. Cl.** **709/246**

(57) **ABSTRACT**

The illustrative embodiment of the present invention provides a platform that enables a content developer to distribute uniform content to multiple types of requesting mobile devices. By authoring content in a generic markup language and using the technologies included in the Mobile Content Framework(MCF), the content developer is able to provide content to multiple types devices without providing different versions of the content. The content may be authored originally in the generic markup language or translated from other languages into the generic markup language by the MCF. The MCF exploits the capabilities and accommodates the limitations of different types of wireless devices by converting generic markup language content to device-specific content. The MCF interacts with device registries holding records of the device attributes in order to provide the device-specific content. The MCF handles these issues for current mobile devices while also being extensible for future mobile devices.

Netflix v. GoTV
IPR2023-00757
Netflix Ex. 1007

(10) **Pub. No.: US 2003/0023755 A1**

(54) **SYSTEM AND METHOD FOR DELIVERING CONTENT TO MOBILE DEVICES**

(43) **Pub. Date: Jan. 30, 2003**

(60) Provisional application No. 60/256,589, filed on Dec. 18, 2000.

’715: EX1007 at (10), (43), (54), (60).
’245: EX1006 at (10), (43), (54), (60).

Overview of Harris

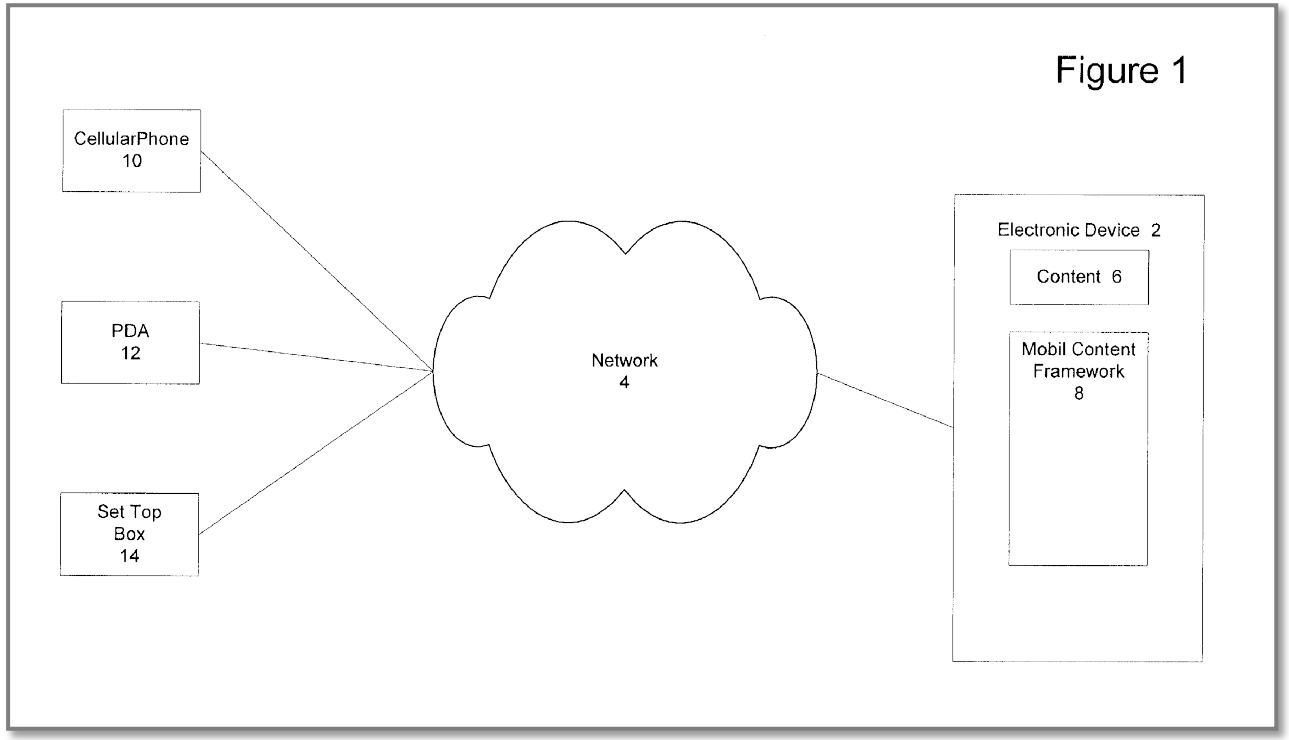

- Harris discloses delivery of content to multiple mobile devices using different device protocols
- MCF content is "tailored to take into account the limited resources of certain devices such as mobile devices"
- "Content is first translated into WAX from the original language of the content provider, … and then converted into a device appropriate language for a requesting mobile device," such as HTML

Harris at ¶¶ 7, 14-15

'715: EX1007 at ¶¶ 7, 14-15; Pet. at 21-24.
'245: EX1006 at ¶¶ 7, 14-15; Pet. at 20-23.

Custom Configuration Associated with an Application

1 Hariki Discloses the Claimed "Application" in Two Ways

Web server as "application"

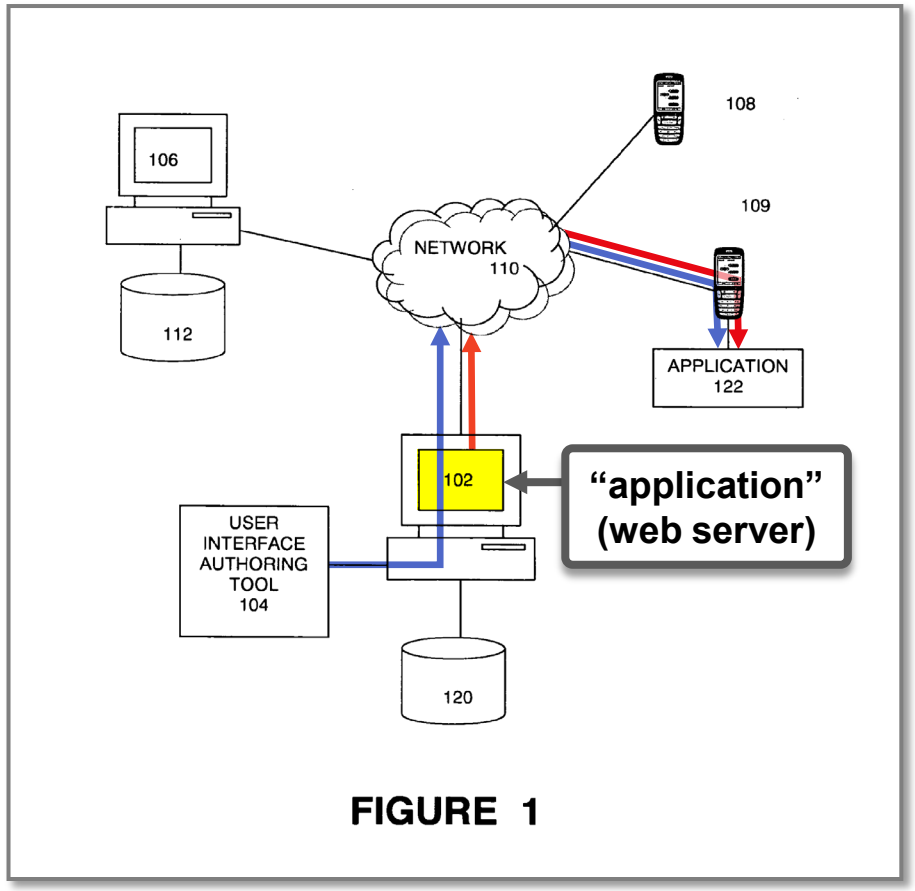

Web browser as "application"

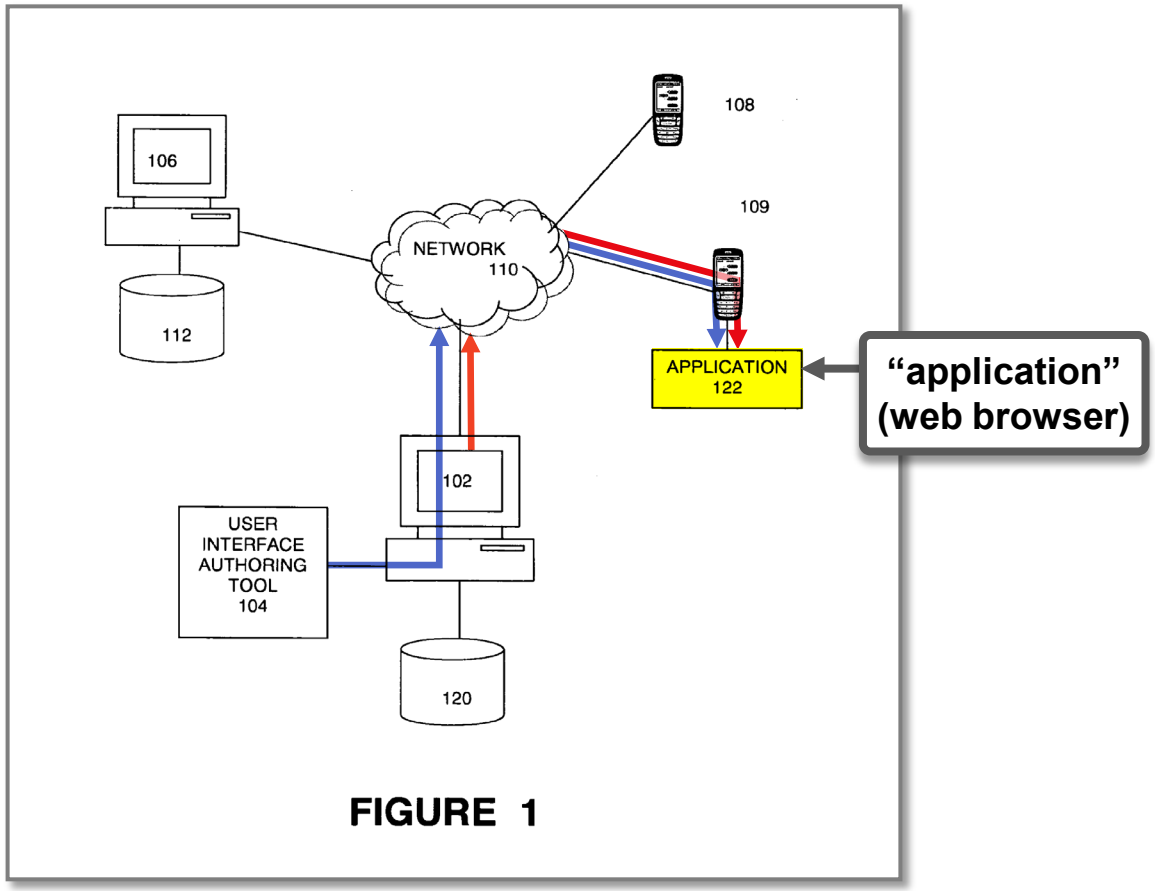

'715: EX1006 at Fig. 1; Pet. at 35-37.
'245: EX1005 at Fig. 1; Pet. at 35-37.

1 Hariki/Harris Discloses the Application on the Server

Hariki/Harris teaches a web server running on server 102 to provide web pages, such as Harris's translated WAX, to a client

[0021] As shown in system **100**, a server computer **102** operated by the service provider or a third party vendor is a content provider server computer that provides content data, application programs, diagnostic tools, program components, or any other content or executable objects to the mobile device **108**. The content provider computer can be a World-Wide Web (WWW) server that stores data in the form of web pages and transmits these pages as Hypertext Markup Language (HTML) files over the Internet **110** to the mobile devices **108** and **109**, or other client computer on the network. For example, server **102** can executes a web server process to serve web pages over network **110**. For this embodiment, one or more of the mobile devices runs a web browser program to access the web pages served by server computer **102** and any other available content provider or supplemental server, such as computer **106**.

Hariki at ¶ 21

[0024] The process by which the illustrative embodiment of the present invention provides customized content to requesting mobile devices is depicted in **FIG. 3**. The process begins when an electronic device, such as a web server accepts a connection and an HTTP request from a mobile device and the servlet engine directs the request to the appropriate page or servlet destined to generate WAX (step **60**). In one embodiment, the servlet engine supports the Java Servlet 2.2 specification. The headers of the HTTP request are examined by the MCF **8** in order to determine the type

* * *

preferences. User preferences may include interface choices, key mappings, key behavior, functionality, the amount of information to be rendered, language and location. WAX is translated into a language the requesting device can understand. The stylesheet determined earlier (step **62**) is used to perform the translation. The customized content is then returned to requesting device (step **76**).

Harris at ¶ 24

'715: EX1006 at ¶ 21; EX1007 at ¶ 24; Pet. at 38-40.
'245: EX1005 at ¶ 21; EX1006 at ¶ 24; Pet. at 37-38.

1 Custom Configuration Is Applied to the Content, Not the Application

Claims require that the custom configuration customizes the compiled content but not the application itself

1. A method of generating content that is renderable by a wireless device, said method comprising:

transmitting, to said wireless device, an identification of a custom configuration of a plurality of rendering blocks of said wireless device, wherein said custom configuration is associated with an application and configures said plurality of rendering blocks to render content in a manner customized to said application; and

transmitting, to said wireless device, compiled content comprising (i) first compiled content specific to a first page of said application and (ii) second compiled content specific to a second page of said application, wherein said compiled content is generated in part from execution of said application, wherein said compiled content comprises render commands expressed in a syntax that is generic to said wireless device, and wherein said custom configuration is applicable to said first and second compiled content,

wherein said compiled content and said custom configuration are usable by a graphical user interface comprising said plurality of rendering blocks to generate renderable content based on said compiled content and said custom configuration.

’715: EX1001 at cl. 1; ID at 66; Reply at 15-16.
’245: EX1001 at cl. 1; ID at 65-66; Reply at 16.

1 Custom Configuration Is Applied to the Content, Not the Application

custom configuration

compiled content

Server Computer

Client Device

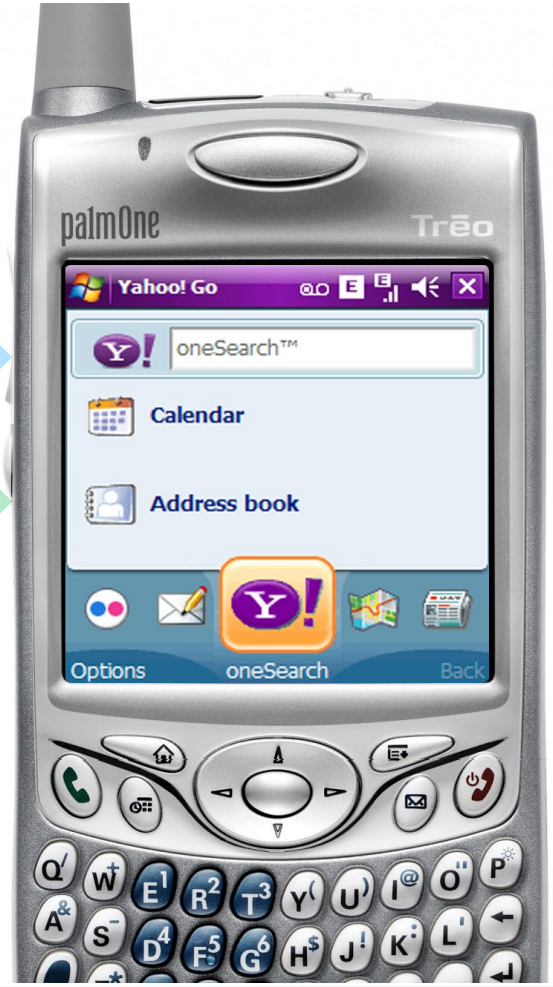

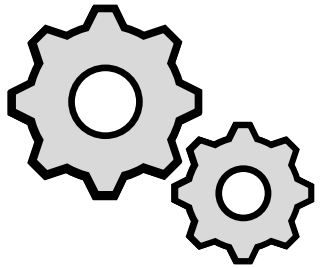

Rendering Blocks

’715: Pet. at 12-17; Reply at 2-5.
’245: Pet. at 12-16; Reply at 2-5.

1 Custom Configuration Is Applied to the Content through Rendering Blocks

Experts agree that the custom configuration arrives separately on the client device to support customization of the compiled content

Lipoff
PO's Expert

"in order to practice the claim as it's written, the custom configuration needs to be there before the application starts sending content to the rendering blocks."

Lipoff Dep. at 23:12-16

Bederson
Petitioner's Expert

"[Content provider] would understand [] that the UI skin would be sent to a client along with content such as HTML content from a server, and those things together would support the customization of that HTML content."

Bederson Dep. at 63:11-16

'715: EX1025 at 23:12-16; EX2031 at 63:11-16; ID at 66; Reply at 17.
'245: EX1029 at 23:12-16, EX2029 at 63:11-16; ID at 65-66; Reply at 17.

1 Custom Configuration is Related to the Application

Compiled content and a custom configuration from the server are used by the client device to generate renderable content

At step **640**, the wireless device receives compiled content generated in part from execution of the requested application by the server. It is appreciated that the compiled content may include basic commands that are expressed in a syntax that is generic to the wireless device but where the parameters of the basic commands are based on the wireless device capability.

'715 Patent at 18:56-61

At step **650**, the wireless device uses a graphical user interface to generate renderable content based on the received compiled content and the custom configuration. In one embodiment, content is rendered by processing the compiled content using the reader and by issuing commands from the reader to rendering blocks of the graphical user interface based on the rendering commands of the compiled content. Accordingly, at step **660**, the content is rendered by the wireless device.

'715 Patent at 18:62-19:3

'715: EX1001 at 18:56-19:3; Pet. at 48-49.
'245: EX1001 at 18:57-19:4, Pet. at 42.

1 Hariki Teaches a UI Skin "Associated with" the Web Server Application

Association is commonsense conclusion when the same provider provides both the web application content and the configuration

[0024] In one embodiment, server computer **102** is operated by a content provider that can generate a customized user interface for a plurality of different makes and types of mobile devices, such as cell phones **108** and **109**. For purposes of discussion, the customized user interface is referred to as a "UI skin." In general, UI skins allow a user to customize the "look and feel" or application program environment of a device by altering display and/or sound output aspects of the device, such as backgrounds, title bars, buttons, alert sounds, and so on. Some programs make automatic skin changes for a user when the user starts the program or uses certain parts of the program; alternatively UI skins can be downloaded by the user and installed on the mobile device to alter the default UI or permanently change the UI of the device. UI skins may be developed by third party vendors, device manufacturers, application writers, and so on. In general, different categories of UI skins can be developed for different types of mobile devices and different makes of mobile devices.

Hariki at ¶ 24

'715: EX1006 at ¶ 24; Pet. at 30-35; Reply at 15-16.
'245: EX1005 at ¶ 24; Pet. at 31-35; Reply at 16-17.

1 ’715 Patent and Hariki Share the Same Objective

component. As discussed above, the configuration data may be used to customize the appearance of the requested application and represents programming and stored content of the graphical user interface **108**. In other words, configuration data may be a set of low level instructions for preprogramming a plurality of rendering blocks **108***a* of the graphical user interface to operate and render data (e.g., “look”) a certain way. For example, configuration data **112** may be used

’715 Patent at 7:56-63

blocks of the wireless device. The custom configuration customizes the look and feel of the content displayed on the wireless device from execution of the requested application.

’715 Patent at 18:40-42

[0008] What is needed, therefore, is a mobile device UI configuration system that allows a UI skin package content provider to easily generate a new UI resource file for new or different mobile devices, and make these UI skin packages available for download and installation on user mobile devices.

[0009] What is further needed is a mobile device configuration system that allows modification of mobile device user interfaces or application programs without modification of the application programs themselves.

Hariki at ¶¶ 8-9

’715: EX1001 at 7:56-63, 18:40-42; EX1006 at ¶¶ 8-9; Pet. at 15; Reply at 16-17.
’245: EX1001 at 7:59-66, 18:41-43; EX1005 at ¶¶ 8-9; Pet. at 15; Reply at 17.

1 Customization Is Defined by the Association with the Application

PO improperly and unnecessarily seeks to add the limitation that the custom configuration is "created for" each requested application

> Ultimately, the claims plainly state that the rendering blocks are configured to render content for the application to the extent that the custom configuration is "associated with" the application, which defines the relevant relationship between the custom configuration and the application, such that the rendering blocks will be customized. A claim construction is not necessary here because the scope of

'715 Reply at 5

'715: Reply at 2-5.
'245: Reply at 2-5.

1 Claims Already Dictate the Nature and Role of the Custom Configuration

PO's "created for" construction has no basis in the claims

What it is: wherein said custom configuration *is* associated with ***an application***

and

What it does: configures said plurality of rendering blocks to render content in a manner customized to ***said application***

What it is: … receive a custom configuration that *is* associated with ***an application***, …

What it does: wherein said custom configuration is operable to configure said plurality of rendering blocks to render content in a manner customized to ***said application***

'715 patent, claims 1, 9; '245 patent, claims 1,12, 23

'715: EX1001 at cls. 1, 9; Reply at 2-5.
'245: EX1001 at cls. 1, 12, 23; Reply at 2-5.

1 Custom Configuration Need Not Be "Created for" the Application

Specification does not teach a mandatory one-to-one relationship – there would be no optionality, no selection, and no versions

interface including a plurality of rendering blocks. A custom configuration may be used to customize the appearance of content generated by a requested application rendered on the rendering blocks. In other words, a custom configuration may

'715 Patent at 2:51-54

server. Moreover, the server may identify a custom configuration to be used for the requested application and the device type. The custom configuration is the theme and determines certain graphical appearances of the requested application. In other words, the custom configuration provides the "look and feel" of the content of the requested application. The server

'715 Patent at 3:9-14

In one embodiment, the message identifying the custom configuration may indicate a version of the custom configuration selected for use with the requested application. The

'715 Patent at 11:62-64

'715: EX1001 at 2:51-54, 3:9-14, 11:62-64; Reply at 2-5.
'245: EX1001 at 2:54-57, 3:12-17, 11:64-66; Reply at 2-5.

Prior Art Application Need Not Be Remote from the Client

2 ’715 (claims 1 and 9) and ’245 Do Not Limit the Transmitting Element

These claims do not specify what element transmits, and are certainly not limited to the application transmitting

1. A method of generating content that is renderable by a wireless device, said method comprising:

___?___ transmitting, to said wireless device, an identification of a custom configuration …; and

___?___ transmitting, to said wireless device, compiled content …

’715 patent, claim 1

PO seeks to require the “application” transmitting without any basis, despite the claims being conspicuously open-ended

’715: EX1001 at cls. 1, 9; Reply at 5-11.
’245: EX1001 at cls. 1, 12, 23; Reply at 5-11.

2 ’715 (claims 1 and 9) and ’245 Do Not Limit the Transmitting Element

PO’s “construction” is result driven
to overcome Hariki’s web browser as the claimed application

1. A method of rendering content on a wireless device, said method comprising:

receiving from ? an identification of a custom configuration …;

receiving from ? compiled content …;

’245 patent, claim 1

PO seeks to add the “application” transmitting without any basis, despite the claims being conspicuously open-ended

’715: EX1001 at cls. 1, 9; Reply at 5-11.
’245: EX1001 at cls. 1, 12, 23; Reply at 5-11.

2 Claims Do Not Limit the Transmitting Element

PO's testimony does not preclude the web server as transmitter and web browser as application

Lipoff
PO's Expert

> In both cases the compiled content needs to be something that's external to the wireless device, the wireless client, the wireless device, wireless client running and the wireless device, it needs to come from a source that's external in order for it to be transmitted to in the case of '715, or received by in the case of the '245.

Lipoff Dep., 48:20-49:4

'715: EX1025 at 48:20-49:4; Reply at 5-11.
'245: EX1029 at 48:20-49:4; Reply at 5-11.

2 Hariki/Harris Discloses HTML from the Server to the Device

The identity of the "claimed application" is immaterial to the transmitting/receiving limitations

[0021] As shown in system **100**, a server computer **102** operated by the service provider or a third party vendor is a content provider server computer that provides content data, application programs, diagnostic tools, program components, or any other content or executable objects to the mobile device **108**. The content provider computer can be a World-Wide Web (WWW) server that stores data in the form of web pages and transmits these pages as Hypertext Markup Language (HTML) files over the Internet **110** to the mobile devices **108** and **109**, or other client computer on the network. For example, server **102** can executes a web server process to serve web pages over network **110**. For this embodiment, one or more of the mobile devices runs a web browser program to access the web pages served by server computer **102** and any other available content provider or supplemental server, such as computer **106**.

Hariki at ¶ 21

'715: EX1006 at ¶ 21; Reply at 14-21.
'245: EX1005 at ¶ 21; Reply at 15-21.

2 Claim Differentiation Undermines PO's Position

Claims 3 and 11 of the '715 patent first introduce the limitation that the application resides on a remote server

> **3**. A method as described in claim **1** wherein said compiled content is partially resultant from said application operating on a remote server.

> **11**. A non-transitory computer readable medium as described in claim **9** wherein said compiled content is partially resultant from said application operating on a remote server.

"[T]he presence of a dependent claim that adds a particular limitation gives rise to a presumption that the limitation in question is not present in the independent claim."

Phillips v. AWH Corp., 415 F.3d 1303, 1315 (Fed. Cir. 2005).

'715: EX1001 at cls. 1, 3, 9, 11; Reply at 5-11.
'245: EX1001 at cls. 1, 4, 12, 15, 23, 26; Reply at 5-11.

Compiled Content Is Generated in Part from Browser Execution

3 PO's Proposal Reads "Execution" Out of the Plain Language

PO's result-driven construction makes the application the source of content rather than specifying an event for its creation

generated how?

Claim: compiled content is generated *in part* from execution of said application

upon execution

PO: said application produces/outputs some part of the compiled content during its execution

by the application

surplusage since an application would not output unless executing

'715: EX1001 at cls. 1, 9; Reply at 11-14.
'245: EX1001 at cls. 1, 12, 23; Reply at 12-14.

3 Compiled Content Is Generated Upon Execution of a Web Browser

Consistent with the claim language, a web browser request for HTML triggers a web server to generate HTML files

transmitting, to said wireless device, compiled content comprising (i) first compiled content specific to a first page of said application and (ii) second compiled content specific to a second page of said application, wherein said compiled content is generated in part from execution of said application, wherein said compiled content comprises render commands expressed in a syntax that is generic to said wireless device, and wherein said custom configuration is applicable to said first and second compiled content,

'715 Patent at 20:48-57

'715: EX1001 at 6:22-31, cls. 1, 9; Reply at 11-14.
'245: EX1001 at 6:26-35, cls. 1, 12, 23; Reply at 12-14.

3 PO's Expert Supports the Plain Language Reading

Mr. Lipoff acknowledges that a well-known meaning of "generated" includes the side effect of execution

Lipoff
PO's Expert

¶100. The use of "generated" in the claim term with respect to the execution of an application comports with the well-known meaning in extrinsic references. For example, "generate" is "to produce something according to an algorithm or program or set of rules, or as a (possibly unintended) side effect of the execution of an algorithm or program." Ex. 2023, Generate, Free On-Line Dictionary of Computing, available at https://foldoc.org/generate (last updated June 15, 1995).

'715 Lipoff Decl. at ¶ 100

'715: EX2022 at ¶ 100; Reply at 11-14.
'245: EX2022 at ¶ 94; Reply at 12-14.

3 Harris/Hariki Discloses Generation Upon Execution of a Browser

Hariki

[0021] As shown in system **100**, a server computer **102** operated by the service provider or a third party vendor is a content provider server computer that provides content data, application programs, diagnostic tools, program components, or any other content or executable objects to the mobile device **108**. The content provider computer can be a World-Wide Web (WWW) server that stores data in the form of web pages and transmits these pages as Hypertext Markup Language (HTML) files over the Internet **110** to the mobile devices **108** and **109**, or other client computer on the network. For example, server **102** can executes a web server process to serve web pages over network **110**. For this embodiment, one or more of the mobile devices runs a web browser program to access the web pages served by server computer **102** and any other available content provider or supplemental server, such as computer **106**.

Hariki at ¶ 21

Harris

[0024] The process by which the illustrative embodiment of the present invention provides customized content to requesting mobile devices is depicted in **FIG. 3**. The process begins when an electronic device, such as a web server accepts a connection and an HTTP request from a mobile device and the servlet engine directs the request to the appropriate page or servlet destined to generate WAX (step **60**). In one embodiment, the servlet engine supports the Java Servlet 2.2 specification. The headers of the HTTP request are examined by the MCF **8** in order to determine the type

* * *

preferences. User preferences may include interface choices, key mappings, key behavior, functionality, the amount of information to be rendered, language and location. WAX is translated into a language the requesting device can understand. The stylesheet determined earlier (step **62**) is used to perform the translation. The customized content is then returned to requesting device (step **76**).

Harris at ¶ 24

'715: EX1006 at ¶ 21; EX1007 at ¶ 24; Pet. at 43-44; ID at 78-80; Reply at 19-20.
'245: EX1005 at ¶ 21; EX1006 at ¶ 24; Pet. at 37-38; ID at 69-71; Reply at 19-20.

Hariki's UI Skin Is Applicable to the Received HTML

4 Hariki Teaches Application-Level Customization

UI skin allows the web browser to access resources for application-level customization of received HTML

[0009] What is further needed is a mobile device configuration system that allows modification of mobile device user interfaces or application programs without modification of the application programs themselves.

Hariki at ¶ 9

the description file and the converted resource files. The mobile device handset includes a resource API to download UI content package data from a UI content server or UI content that is locally stored. The resource API contains a number of different plug-in content engines and an engine selector component to allow an application program executed on the mobile handset to access the resources without requiring modification of the application.

Hariki at ¶ 19

'715: EX1006 at ¶¶ 9, 19; ID at 62-63; Reply at 21-22.
'245: EX1005 at ¶¶ 9, 19; ID at 62; Reply at 21-22.

4 Hariki's UI Skin Is Applicable to the Received HTML

The resources are accessed by applications, such as a web browser, to configure rendering blocks to render content

buttons, alert sounds, and so on. Some programs make automatic skin changes for a user when the user starts the program or uses certain parts of the program; alternatively UI skins can be downloaded by the user and installed on the mobile device to alter the default UI or permanently change the UI of the device. UI skins may be developed by third party vendors, device manufacturers, application writers, and so on. In general, different categories of UI skins can be developed for different types of mobile devices and different makes of mobile devices.

Hariki at ¶ 24

Applications can also access the resources of various file types without requiring modification or implementation changes. Resource files can be placed in the handset itself or on server computers coupled to the mobile handset over the network. Different UI specifications can be accommodated for each device by converting the resource format through the resource API, without requiring modification of the application and the UI content packages.

Hariki at ¶ 42

'715: EX1006 at ¶¶ 24, 42; ID at 62-63; Reply at 21-22.
'245: EX1005 at ¶¶ 24, 42; ID at 62; Reply at 21-22.

Prior Art Discloses a Library and Layout Solver

5 PO Misunderstands the Petition Regarding ’715/17[a] and [b]

Hariki teaches multiple applications through the UI authoring tool, including the web server

UI authoring tool supports creation of multiple UI skins

a library of applications;

a library of custom configuration data comprising a custom configuration that configures a plurality of rendering blocks of said wireless device to render content in a manner customized to an application from said library of applications requested by said wireless device; and

’715 patent, claim 17

At least one UI skin is customized to the web server application as in claim 1[b]

’715: EX1001 at cl. 17; Pet. at 67-69; Reply at 23.

5 Hariki Discloses a Library of Applications

loaded to a mobile device, such as **108** or **109**. In one embodiment, the UI descriptor information can comprise screen parameter definitions (e.g., size, aspect ratio, icon definitions, and so on), images, video clips, music or other sound clips, ringtones, games, small applications (applets), utilities, diagnostic tools, or any other similar data or applications, all of which are referred to as "UI content objects." UI Content objects can be provided by a number of different content providers, such as content provider **102** or **106**. Typically customized UI content is downloaded upon demand, such as when the user requests a UI upgrade or modification from a particular content provider. Alternatively, UI skin content can be pushed to the user from a content provider based on a periodic subscription arrangement, trial use, or similar mechanism. In one embodiment, the UI content objects are generated and made available for download through the user interface authoring tool **104** executed by server computer **102**. The user interface authoring tool **104** can represent a program or suite of programs, or even hardware circuits, or any combination thereof embodying instructions executed by one or more processing units in server **102**.

Hariki at ¶ 27

In cited ¶ 27, Hariki teaches that the UI authoring tool hosts:

- UI content objects, such as "…data or applications" and
- Processing units in server 102
  - "…application programs, …, program components, or any other content or executable objects" (¶ 21)
  - "a web server process to serve web pages over network 110 (¶ 21)

The UI authoring tool can include other web applications hosted through the web server

'715: EX1006 at ¶¶ 21, 27; Pet. at 67-69; Reply at 23.

5 Hariki Discloses a Library of Custom Configurations

There is no apparent dispute about availability of multiple UI skins

[0028] FIG. **2** is a functional block diagram of a user interface authoring system, under an embodiment. The UI authoring system allows content providers to create content packages embodying UI skins for distribution and downloading to mobile devices on the network. The content package for each UI skin contains information specific to the type of device, manufacturer of the device, operating system, application programs, and other relevant information regarding the mobile device.

Hariki at ¶ 28

resource depot **202**. The resource files can contain various types of data objects relating to the user interface elements of the mobile devices, such as image files, sound files, screen layouts, icons, movies, and so on. The common resource depot **202** can be implemented as a database stored in a data store **120** maintained by the content provider **102** or a data store **112** maintained by a separate server **106**.

[0032] The profile selector **205** selects a resource profile **204** depending upon the device model selected by the content provider. The corresponding resource **202** for that model is then converted by resource converter **206**. The resource converter **206** can be configured to perform various different types of conversion operations, such as converting file formats (e.g., PNG to JPEG), changing color formats (e.g., monochrome to 8-bit color), and so on. The resource converter **206** converts each resource into a format corresponding to the resource profile. A screen previewer com-

Hariki at ¶ 31-32

'715: EX1006 at ¶¶ 28, 31-32; Pet. at 67-69; Reply at 23.

6 Harris's MCF Reads on the Layout Solver of '715/17[c]

The '715 patent teaches that the layout solver translates the template and claim 17[c] requires that the layout solver transmit compiled content

device profile and device capability. The layout solver translates the template and/or static page into a series of basic commands based on the device profile and device capabilities. Basic commands are written in a device independent

'715 Patent at 3:54-57

tem **520**. In response to receiving the high level and dynamic template and/or static pages, the layout solver **580** translates the received information into a series of basic commands based on the client's capabilities.

'715 Patent at 17:56-59

'715: EX1001 at 3:54-57, 17:56-59; Pet. at 69-72; Reply at 23-24.

6 Harris's MCF Reads on the Layout Solver of '715/17[c]

MCF translates WAX and responds to page requests in HTML

[0024] The process by which the illustrative embodiment of the present invention provides customized content to requesting mobile devices is depicted in **FIG. 3**. The process begins when an electronic device, such as a web server accepts a connection and an HTTP request from a mobile device and the servlet engine directs the request to the appropriate page or servlet destined to generate WAX (step **60**). In one embodiment, the servlet engine supports the Java Servlet 2.2 specification. The headers of the HTTP request are examined by the MCF **8** in order to determine the type

* * *

preferences. User preferences may include interface choices, key mappings, key behavior, functionality, the amount of information to be rendered, language and location. WAX is translated into a language the requesting device can understand. The stylesheet determined earlier (step **62**) is used to perform the translation. The customized content is then returned to requesting device (step **76**).

Harris at ¶ 24

[0027] The illustrative embodiment of the present invention addresses one of the biggest problems with translating content dynamically, the performance penalty paid during each web page request. The MCF **8** provides multiple stages at which to cache completed page requests in order to improve the performance of subsequent requests. The page cache works at two different stages, a post-process cache and a post-translate cache. The post-process cache takes place after an application retrieves dynamic data from the database, user-preference system, or anywhere else, when the WAX page is persisted to disk. Subsequent requests for the

* * *

database call can be cached before filtering and translation. The post-translate cache occurs after the WAX has been processed, when the framework translates the WAX into a device-specific markup language (WML, HTML, etc.). Following the translation, the page is persisted to disk and subsequent requests for the same page do not require processing. This form of caching is good for highly customized

Harris at ¶ 27

'715: EX1002 at ¶ 137; EX1007 at ¶¶ 24, 27; Pet. at 67-69; Reply at 23.

No Objective Indicia of Non-Obviousness

7 PO Has No Evidence for Vast Majority of Claims at Issue

Verdict (on appeal) only involved claims 1 and 4 of the ’715 patent

I. INFRINGEMENT

1. Did GoTV prove by a preponderance of the evidence that Netflix infringed the following claim of the ’715 Patent?

“YES” is a finding for **GoTV**. “NO” is a finding for **Netflix**.

Please check the box that reflects your verdict.

Claims	Infringement	
	YES	NO
4	✓	

Verdict Form at 3

’715: EX3003 at 3.

7 Nexus Requires More Than Just Use of an Invention

"Commercial success is relevant to obviousness only if there is a 'nexus ... between the sales and the merits of the claimed invention.' There must be 'proof that the sales were a direct result of the unique characteristics of the claimed invention—as opposed to other economic and commercial factors unrelated to the quality of the patented subject matter.'"

In re Applied Materials, Inc., 692 F.3d 1289, 1299-1300 (Fed. Cir. 2012) (citations omitted)

7 PO Admits Commercial Success Is Only Partially Attributable

PO concedes that delivery is only part of Netflix's business and fails to explain the value of content to a content delivery service

be considered in every case where present."). Here the patented invention, as implemented in the Netflix system, has been a commercial success due in part to the "essential" patented technology.

'715 POR at 57

'715: POR at 57; Reply at 25-26.

7 PO Fails to Make a *Prima Facie* Case of Objective Indicia

Even if commercial success could be attributable solely to claim 4 of the '715 patent (it is not), PO ignores content in ***content*** *delivery*

employees, Netflix's commercial success is derived from the Netflix application's use of the patented invention to selectively, based on which type of device the user is using, "deliver only the data needed to render the view in as few requests as possible, which is essential for a quality mobile experience." Ex. 2029 (Berglund, Netflix UI Engineer); *see also* Ex. 2030, (Kao, Netflix UI Engineer, Dep. Tr. p.3 at 125:2–8 (agreeing with Berglund)).

'715 POR at 58

'715: POR at 58; Reply at 25-26.

Hariki's Engines Read the Received HTML

8 Hariki/Harris Teaches the Engine of ’245 Patent Claim 23(g)

Hariki discloses engine processing of linked resources in compiled content

[0043] As shown in FIG. **5**, the resident application **506** is functionally coupled to resource API **508**, which contains a number of functional components such as package selector **510**, description file parser **512**, an engine selector **520**, and one or more engines, such as Flash engine **514**, PNG (portable network graphics) engine **516**, JPEG (joint photographic experts group) engine **518**, and any other similar engines. These engines process the applicable resource using the appropriate playback format depending upon the type of data or program elements in the resource. Thus, for example, the resource is an applet, the flash engine **514** is invoked, and if the resource is a photograph, the JPEG engine **518** is invoked, and so on.

Hariki at ¶ 43

Bederson | Petitioner’s Expert

So I agree that Hariki's engines do correspond to the reader, and those work by processing any of the content that a server can send, including HTML files or images or any of the other content that would be transmitted to the mobile device.

Bederson Dep. at 75:1-6

’245: EX1002 at ¶ 140-43; EX1005 at ¶ 43; EX2029 at 75:1-6; Pet. at 42-46; Reply at 22-23.

8 Hariki/Harris Teaches the Engine of ’245 Patent Claim 23(g)

“an engine for reading” should not be limited to parsing the base HTML file

Bederson
Petitioner’s Expert

question. So while those images may be referenced by HTML, they are transmitted separately from a server to the client, and the engines don't need to parse HTML in order to receive and process an image.

* * *

A -- with that context, I think that while I don't see any limitation that an engine couldn't parse HTML in Hariki's disclosure, I think what Hariki discloses primarily is that the application processes HTML and that the engines process various kinds of content that might be transmitted separately and referenced by the HTML.

Bederson Dep. at 75:22-76:4,76:10-17

’245: EX1002 at ¶ 140-43; EX1005 at ¶ 43; EX2029 at 75:22-76:17; Pet. at 42-46; Reply at 22-23.

8 Hariki/Harris Teaches an Engine for Reading Compiled Content

PO misapprehends the interaction between the web browser and engines

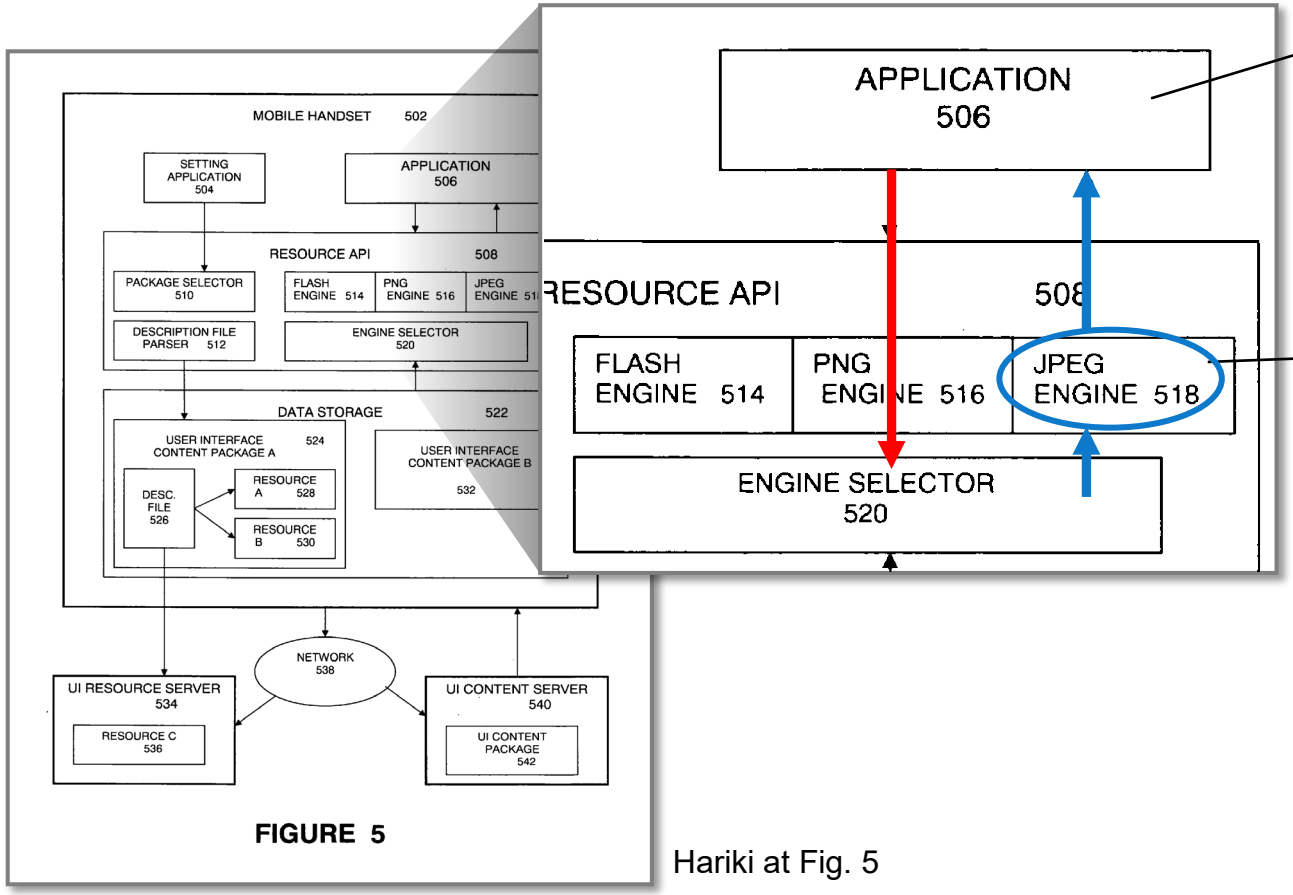

Harris's HTML including JPEG links

Browser would send at least the link if not the retrieved image data for JPEG processing

Hariki at Fig. 5

'245: EX1005 at Fig. 5; Pet. at 54-55; ID at 101; Reply at 22-23.

’715 Patent, Claim 1

1. A method of generating content that is renderable by a wireless device, said method comprising:

transmitting, to said wireless device, an identification of a custom configuration of a plurality of rendering blocks of said wireless device, wherein said custom configuration is associated with an application and configures said plurality of rendering blocks to render content in a manner customized to said application; and

transmitting, to said wireless device, compiled content comprising (i) first compiled content specific to a first page of said application and (ii) second compiled content specific to a second page of said application, wherein said compiled content is generated in part from execution of said application, wherein said compiled content comprises render commands expressed in a syntax that is generic to said wireless device, and wherein said custom configuration is applicable to said first and second compiled content,

wherein said compiled content and said custom configuration are usable by a graphical user interface comprising said plurality of rendering blocks to generate renderable content based on said compiled content and said custom configuration.

’715 Patent, Claim 2

2. A method as described in claim **1** wherein said renderable content comprises audio content and display content.

’715 Patent, Claim 3

3. A method as described in claim **1** wherein said compiled content is partially resultant from said application operating on a remote server.

’715 Patent, Claim 4

4. A method as described in claim **1** wherein said compiled content is specific to the rendering capabilities of said wireless device.

’715 Patent, Claim 5

5. A method as described in claim **1** wherein each of said plurality of rendering blocks operates specific to a wireless device type of said wireless device and each is instructed using a syntax that is generic to said wireless device type.

’715 Patent, Claim 6

6. A method as described in claim **5** wherein said custom configuration comprises a syntax that is generic regarding said wireless device type.

’715 Patent, Claim 7

7. A method as described in claim 1 wherein said custom configuration comprises configuration information and content specific to said application.

’715 Patent, Claim 8

8. A method as described in claim **1** wherein said custom configuration is one of a plurality of memory-stored custom configurations stored by said wireless device, and wherein said method further comprises transmitting an identifier that identifies said custom configuration.

’715 Patent, Claim 9

9. A non-transitory computer readable medium comprising instructions therein that when executed by a processor implement a method of generating content that is renderable by a wireless device, said method comprising:

transmitting, to said wireless device, an identification of a custom configuration of a plurality of rendering blocks of said wireless device, wherein said custom configuration is associated with an application and configures said plurality of rendering blocks to render content in a manner customized to said application; and

transmitting, to said wireless device, compiled content comprising (i) first compiled content specific to a first page of said application and (ii) second compiled content specific to a second page of said application, wherein said compiled content is generated in part from execution of said application, wherein said compiled content comprises render commands expressed in a syntax that is generic to said wireless device, and wherein said custom configuration is applicable to said first and second compiled content,

wherein said compiled content and said custom configuration are usable by a graphical user interface comprising said plurality of rendering blocks to generate renderable content based on said compiled content and said custom configuration.

’715 Patent, Claim 10

10. A non-transitory computer readable medium as described in claim **9** wherein said renderable content comprises audio content and display content.

’715 Patent, Claim 11

11. A non-transitory computer readable medium as described in claim **9** wherein said compiled content is partially resultant from said application operating on a remote server.

’715 Patent, Claim 12

12. A non-transitory computer readable medium as described in claim **9** wherein said compiled content is specific to the rendering capabilities of said wireless device.

’715 Patent, Claim 13

13. A non-transitory computer readable medium as described in claim **9** wherein each of said plurality of rendering blocks operates specific to a wireless device type of said wireless device and each is instructed using a syntax that is generic to said wireless device type.

’715 Patent, Claim 14

14. A non-transitory computer readable medium as described in claim **13** wherein said custom configuration comprises a syntax that is generic regarding said wireless device type.

’715 Patent, Claim 15

15. A non-transitory computer readable medium as described in claim **9** wherein said custom configuration comprises configuration information and content specific to said application.

’715 Patent, Claim 16

16. A non-transitory computer readable medium as described in claim **9** wherein said method further comprises transmitting an identifier that identifies said custom configuration.

’715 Patent, Claim 17

17. A server that is programmed to generate content that is renderable by a wireless device, comprising:

a library of applications;

a library of custom configuration data comprising a custom configuration that configures a plurality of rendering blocks of said wireless device to render content in a manner customized to an application from said library of applications requested by said wireless device; and

a layout solver that transmits compiled content to said wireless device, said compiled content comprising (i) first compiled content specific to a first page of said application and (ii) second compiled content specific to a second page of said application, wherein said compiled content is generated in part from execution of said application by said server, wherein said compiled content comprises render commands expressed in a syntax that is generic to said wireless device, and wherein said custom configuration is applicable to said first and second compiled content,

wherein said compiled content and said custom configuration are usable by a graphical user interface comprising said plurality of rendering blocks to generate renderable content based on said compiled content and said custom configuration.

’715 Patent, Claim 18

18. A server as described in claim **17** wherein said renderable content comprises audio content and display content.

’715 Patent, Claim 19

19. A server as described in claim **17** wherein said compiled content is specific to the rendering capabilities of said wireless device.

’715 Patent, Claim 20

20. A server as described in claim **17** wherein said custom configuration comprises configuration information and content specific to said application.

’245 Patent, Claim 1

1. A method of generating content that is renderable by a wireless device, said method comprising:

transmitting, to said wireless device, an identification of a custom configuration of a plurality of rendering blocks of said wireless device, wherein said custom configuration is associated with an application and configures said plurality of rendering blocks to render content in a manner customized to said application; and

transmitting, to said wireless device, compiled content comprising (i) first compiled content specific to a first page of said application and (ii) second compiled content specific to a second page of said application, wherein said compiled content is generated in part from execution of said application, wherein said compiled content comprises render commands expressed in a syntax that is generic to said wireless device, and wherein said custom configuration is applicable to said first and second compiled content,

wherein said compiled content and said custom configuration are usable by a graphical user interface comprising said plurality of rendering blocks to generate renderable content based on said compiled content and said custom configuration.

’245 Patent, Claim 2

2. A method as described in claim **1** wherein said using a graphical user interface comprising said plurality of rendering blocks to generate renderable content comprises:

processing said compiled content using a reader of said wireless device; and

issuing commands from said reader to individual rendering blocks of said graphical user interface based on said rendering commands of said compiled content.

’245 Patent, Claim 3

3. A method as described in claim **1** wherein said renderable content comprises audio content and display content.

’245 Patent, Claim 4

4. A method as described in claim **1** wherein said compiled content is partially resultant from said application operating on a remote server.

’245 Patent, Claim 5

5. A method as described in claim **1** wherein said compiled content is specific to the rendering capabilities of said wireless device.

’245 Patent, Claim 6

6. A method as described in claim **1** wherein each of said plurality of rendering blocks operates specific to a wireless device type of said wireless device and each is instructed using a syntax that is generic to said wireless device type.

’245 Patent, Claim 7

7. A method as described in claim **6** wherein said custom configuration comprises a syntax that is generic regarding said wireless device type.

’245 Patent, Claim 8

8. A method as described in claim **1** wherein said custom configuration comprises configuration information and content specific to said application.

’245 Patent, Claim 9

9. A method as described in claim **1** wherein said custom configuration is one of a plurality of memory-stored custom configurations stored by said wireless device and wherein further said identifying said custom configuration comprises receiving an identifier that identifies said custom configuration.

’245 Patent, Claim 10

10. A method as described in claim **1** further comprising receiving and storing said custom configuration.

’245 Patent, Claim 11

11. A method as described in claim **1** wherein said plurality of rendering blocks of said graphical user interface comprises:

a first block that controls the rendering of ticker information across a display screen of said wireless device;

a second block that controls the rendering of button images on said display screen; and

a third block that controls the rendering of audio on a speaker of said wireless device.

’245 Patent, Claim 12

12. A non-transitory computer usable medium comprising instructions therein that when executed by a processor implement a method of rendering content on a wireless device, said method comprising:

receiving an identification of a custom configuration of a plurality of rendering blocks of said wireless device, wherein said custom configuration is associated with an application and configures said plurality of rendering blocks to render content in a manner customized to said application;

receiving compiled content generated in part from execution of said application wherein said compiled content comprises render commands expressed in a syntax that is generic to said wireless device;

using a graphical user interface comprising said plurality of rendering blocks to generate renderable content based on said compiled content and said custom configuration; and

rendering said renderable content on said wireless device, wherein said receiving compiled content comprises:

receiving first compiled content specific to a first page of said application; and

receiving second compiled content specific to a second page of said application, wherein said custom configuration is applicable to both said first and second compiled content.

’245 Patent, Claim 13

13. A non-transitory computer usable medium as described in claim **12** wherein said using a graphical user interface comprising said plurality of rendering blocks to generate renderable content comprises:

processing said compiled content using a reader of said wireless device; and

issuing commands from said reader to individual rendering blocks of said graphical user interface based on said rendering commands of said compiled content.

’245 Patent, Claim 14

14. A non-transitory computer usable medium as described in claim **12** wherein said renderable content comprises audio content and display content.

’245 Patent, Claim 15

15. A non-transitory computer usable medium as described in claim **12** wherein said compiled content is partially resultant from said application operating on a remote server.

’245 Patent, Claim 16

16. A non-transitory computer usable medium as described in claim **12** wherein said compiled content is specific to the rendering capabilities of said wireless device.

’245 Patent, Claim 17

17. A non-transitory computer usable medium as described in claim **12** wherein each of said plurality of rendering blocks operates specific to a wireless device type of said wireless device and each is instructed using a syntax that is generic to said wireless device type.

’245 Patent, Claim 18

18. A non-transitory computer usable medium as described in claim **17** wherein said custom configuration comprises a syntax that is generic regarding said wireless device type.

’245 Patent, Claim 19

19. A non-transitory computer usable medium as described in claim **12** wherein said custom configuration comprises configuration information and content specific to said application.

’245 Patent, Claim 20

20. A non-transitory computer usable medium as described in claim **12** wherein said custom configuration is one of a plurality of memory-stored custom configurations stored by said wireless device and wherein further said identifying said custom configuration comprises receiving an identifier that identifies said custom configuration.

’245 Patent, Claim 21

21. A non-transitory computer usable medium as described in claim **12** wherein said method further comprises receiving and storing said custom configuration.

’245 Patent, Claim 22

22. A non-transitory computer usable medium as described in claim **12** wherein said plurality of rendering blocks of said graphical user interface comprises:

a first block that controls the rendering of ticker information across a display screen of said wireless device;

a second block that controls the rendering of button images on said display screen; and

a third block that controls the rendering of audio on a speaker of said wireless device.

’245 Patent, Claim 23

23. A wireless device operable to communicate with a remote server, said wireless device comprising:

a transceiver coupled to a bus and operable to receive a custom configuration that is associated with an application, said transceiver also operable to receive compiled content generated in part from execution of said application and comprising a plurality of rendering commands expressed in a syntax that is generic to said wireless device;

a memory coupled to said bus and operable to store said compiled content and said custom configuration;

a processor coupled to said bus and operable to implement the following:

a graphical user interface comprising a plurality of rendering blocks and operable to generate renderable content based on said compiled content and said custom configuration wherein said custom configuration is operable to configure said plurality of rendering blocks to render content in a manner customized to said application; and

an engine for reading said compiled content and responsive thereto for causing said graphical user interface to generate said renderable content based on said render commands; and

a display device coupled to said bus and operable to render a portion of said renderable content, wherein said compiled content comprises:

a first compiled content specific to a first page of said application; and

a second compiled content specific to a second page of said application, wherein said custom configuration is applicable to both said first and second compiled content.

’245 Patent, Claim 24

24. The wireless device as described in claim **23** wherein said engine is further operable to issue commands to individual rendering blocks of said graphical user interface based on said plurality of rendering commands of said compiled content.

’245 Patent, Claim 25

25. The wireless device as described in claim **23** further comprising an audio rendering device coupled to said bus and wherein said renderable content comprises audio content and display content.

’245 Patent, Claim 26

26. The wireless device as described in claim **23** wherein said compiled content is partially resultant from said application operating on a remote server.

’245 Patent, Claim 27

27. The wireless device as described in claim **23** wherein said compiled content is specific to the rendering capabilities of said wireless device.

’245 Patent, Claim 28

28. The wireless device as described in claim **23** wherein each of said plurality of rendering blocks operates specific to a wireless device type of said wireless device and each is instructed using a syntax that is generic to said wireless device type.

’245 Patent, Claim 29

29. The wireless device as described in claim **28** wherein said custom configuration is expressed in a syntax that is generic to said wireless device type.

’245 Patent, Claim 30

30. The wireless device as described in claim **23** wherein said custom configuration comprises configuration information and content specific to said application.

’245 Patent, Claim 31

31. The wireless device as described in claim **23** wherein said custom configuration is one of a plurality of memory-stored custom configurations stored in said memory.

’245 Patent, Claim 32

32. The wireless device as described in claim **23** wherein said plurality of rendering blocks of said graphical user interface comprises:

a first block that controls the rendering of ticker information across said display screen of said wireless device;

a second block that controls the rendering of button images on said display screen; and

a third block that controls the rendering of audio on a speaker of said wireless device.

’245 Patent, Claim 33

33. The wireless device as described in claim **23** wherein said plurality of rendering blocks of said graphical user interface comprises:

a first block that controls the rendering of a scroll bar on said display screen of said wireless device;

a second block that controls the rendering of an input box on said display screen of said wireless device; and

a third block that control the rendering of a text display region on said display screen of said wireless device.