US007054664B2

(12) **United States Patent**
Nagaraj

(10) **Patent No.: US 7,054,664 B2**
(45) **Date of Patent: May 30, 2006**

(54) **METHOD AND APPARATUS FOR PROVIDING USER SPECIFIC DOWNLINK BEAMFORMING IN A FIXED BEAM NETWORK**

(75) Inventor: **Shirish Nagaraj**, Middletown, NJ (US)

(73) Assignee: **Lucent Technologies Inc.**, Murray Hill, NJ (US)

(*) Notice: Subject to any disclaimer, the term of this patent is extended or adjusted under 35 U.S.C. 154(b) by 256 days.

(21) Appl. No.: **10/696,930**

(22) Filed: **Oct. 30, 2003**

(65) **Prior Publication Data**

US 2005/0096090 A1 May 5, 2005

(51) **Int. Cl.**
H04Q 7/20 (2006.01)

(52) **U.S. Cl.** **455/562.1**; 455/25; 455/63.4; 455/69; 455/103; 455/121; 455/193.1; 455/575.7; 342/154; 342/367; 342/368; 342/373; 342/417

(58) **Field of Classification Search** 455/25, 455/63.4, 121, 193.1, 276.1, 273, 440, 562.1, 455/575.7, 69, 103, 561; 342/154, 157, 359, 342/367–368, 373, 417
See application file for complete search history.

(56) **References Cited**

U.S. PATENT DOCUMENTS

5,045,859 A * 9/1991 Yetter 342/414
5,634,199 A * 5/1997 Gerlach et al. 455/63.1
6,130,643 A * 10/2000 Trippett et al. 342/380
6,345,188 B1 * 2/2002 Keskitalo et al. 455/561
6,433,738 B1 * 8/2002 Kikuchi 342/368
6,470,194 B1 * 10/2002 Miya et al. 455/562.1
6,477,161 B1 * 11/2002 Hudson et al. 370/342
6,606,058 B1 * 8/2003 Bonek et al. 342/383
6,876,693 B1 * 4/2005 Sim 375/144
2002/0068590 A1 * 6/2002 Suzuki et al. 455/466
2003/0048760 A1 * 3/2003 Park et al. 370/295
2003/0092469 A1 * 5/2003 Takano 455/562
2003/0124994 A1 * 7/2003 Ylitalo 455/91
2003/0151553 A1 * 8/2003 Ylitalo 342/422
2003/0152099 A1 * 8/2003 Chun et al. 370/441
2003/0162567 A1 * 8/2003 Raghothaman et al. 455/562
2003/0190897 A1 * 10/2003 Lei et al. 455/101
2004/0014499 A1 * 1/2004 Hamalainen et al. 455/561
2004/0014501 A1 * 1/2004 Kuwahara et al. 455/561
2004/0063468 A1 * 4/2004 Frank 455/561
2004/0082299 A1 * 4/2004 Brunner et al. 455/101
2004/0157646 A1 * 8/2004 Raleigh et al. 455/562.1
2005/0101352 A1 * 5/2005 Logothetis et al. 455/562.1

* cited by examiner

Primary Examiner—William Trost
Assistant Examiner—James D. Ewart

(57) **ABSTRACT**

The disclosed embodiments relate to a system and method for providing user specific beams in a fixed beam network, the fixed beam network comprising a plurality of fixed beams, each of the plurality of fixed beams being defined by a plurality of fixed beam correlation coefficients. The system may comprise a device that computes reception correlation data for a received signal, and a beamformer that is adapted to determine transmission weighting coefficients to be applied to a return signal based on the difference between the reception correlation data and the fixed beam weighting coefficients associated with at least one of the plurality of fixed beams.

19 Claims, 4 Drawing Sheets

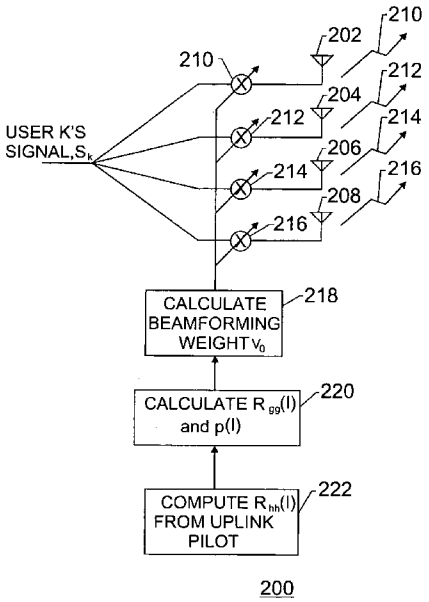

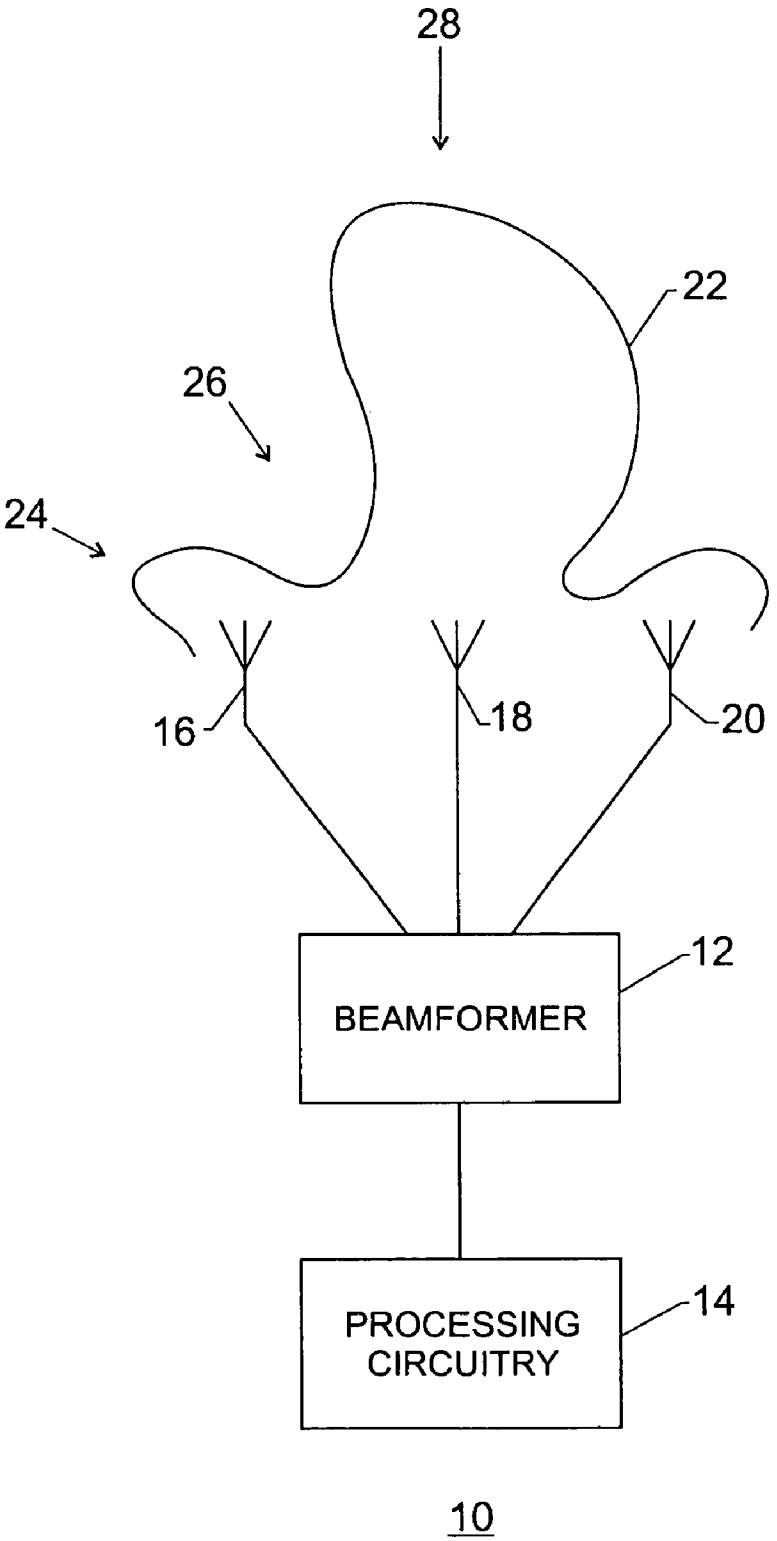

FIG. 1

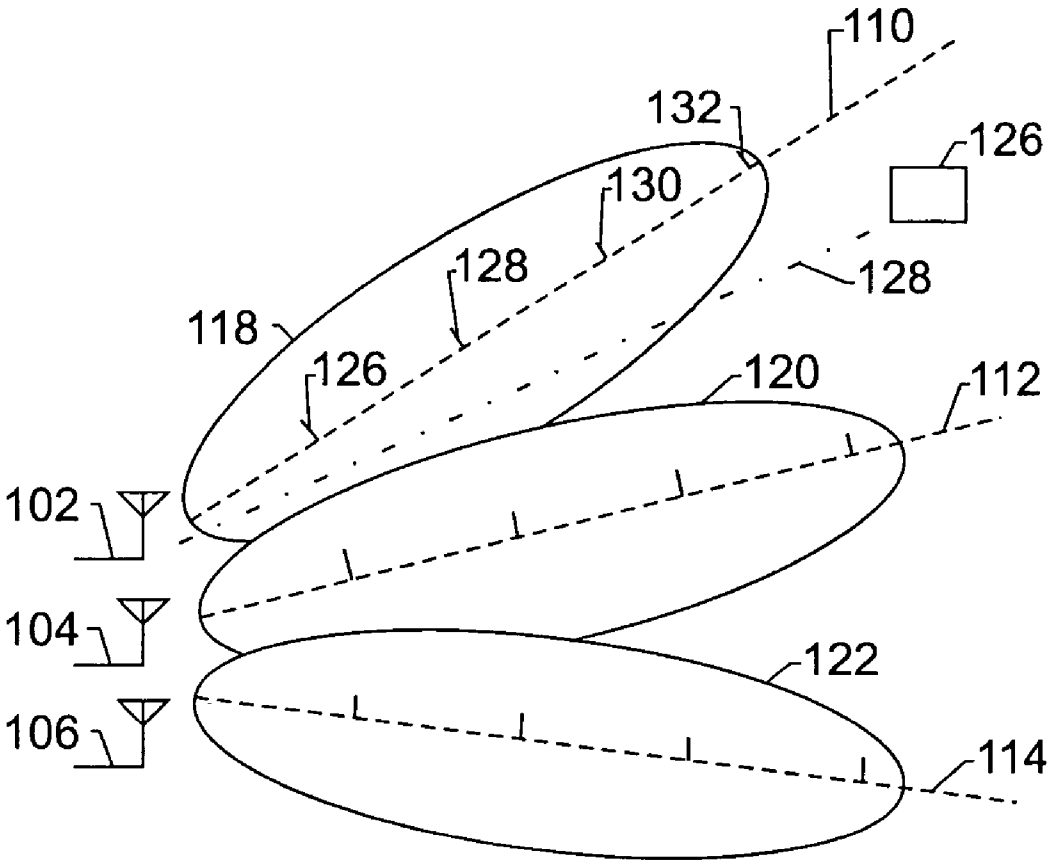

100

FIG. 2

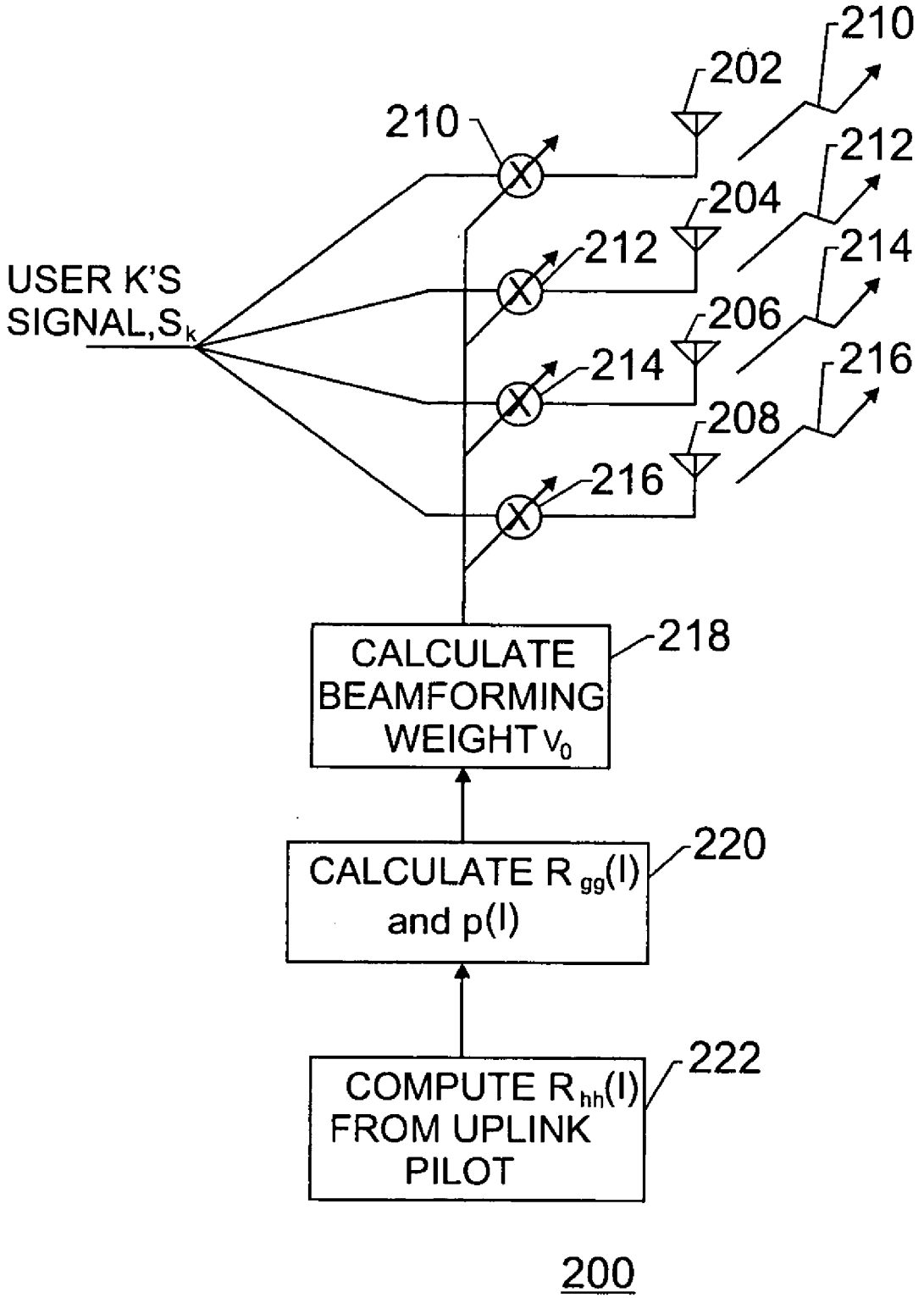
210
202
210
212
204
212
214
USER K'S
SIGNAL, S_k
206
214
216
208
216
CALCULATE
BEAMFORMING
WEIGHT V_0
218
CALCULATE $R_{gg}(l)$
and $p(l)$
220
COMPUTE $R_{hh}(l)$
FROM UPLINK
PILOT
222
200

FIG. 3

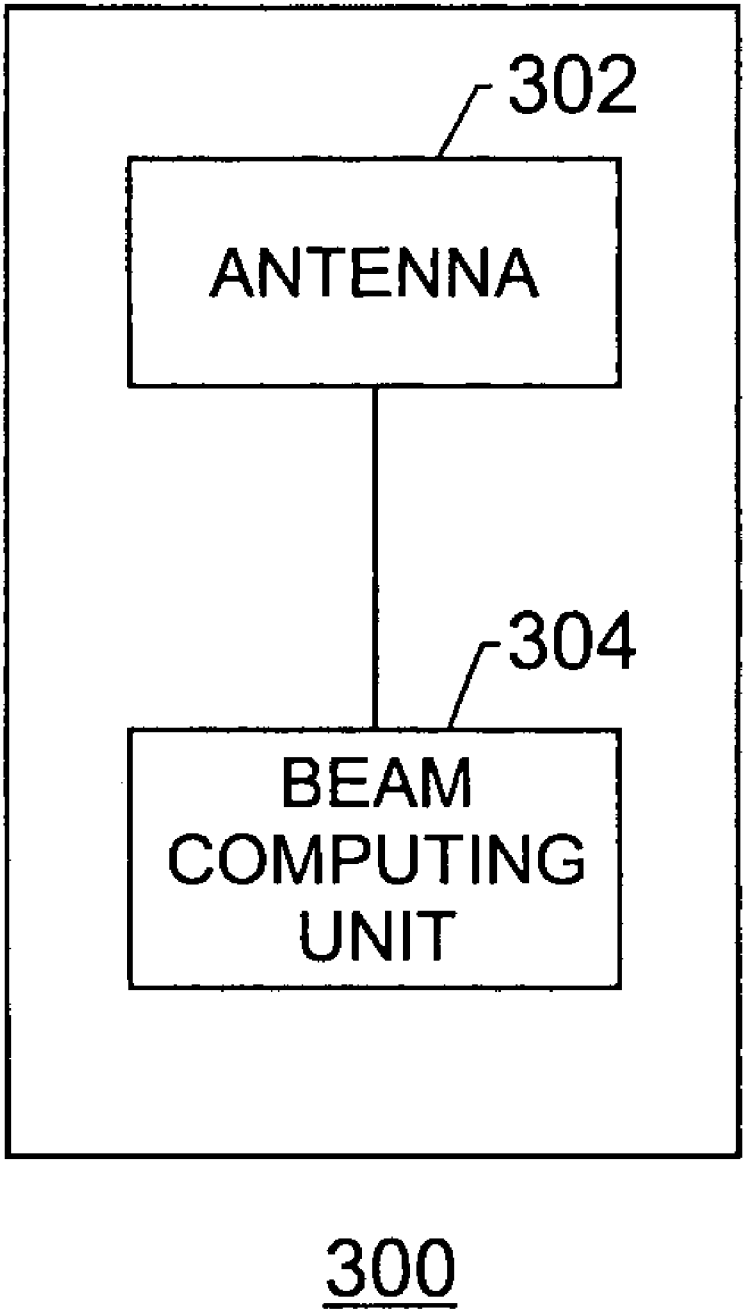

FIG. 4

METHOD AND APPARATUS FOR PROVIDING USER SPECIFIC DOWNLINK BEAMFORMING IN A FIXED BEAM NETWORK

BACKGROUND OF THE INVENTION

1. Field of the Invention

The present invention relates generally to communication systems that transmit, receive and process communication signals and, more particularly, to providing user specific downlink beamforming in a fixed beam network.

2. Description of the Related Art

This section is intended to introduce the reader to various aspects of art that may be related to various aspects of the present invention, which are described and/or claimed below. This discussion is believed to be helpful in providing the reader with background information to facilitate a better understanding of the various aspects of the present invention. Accordingly, it should be understood that these statements are to be read in this light, and not as admissions of prior art.

Communication systems that transmit and receive communication signals continue to grow in importance. Such systems are used to provide television, radio, satellite communication, cell phone service, wireless computing networks and the like. An important aspect of such systems is the ability to efficiently process signals to continue to improve the quality of service provided to users.

Antenna arrays may be used to perform beamforming to enhance reception of signals from different angles of arrival, and transmit beamforming to enhance the quality of transmission of signals to different users. Phase offsets between signals received from a user on different elements of the antenna array depend on the angle of arrival of the user's signals at the antenna array. This phenomenon can be utilized to combine signals arriving from a desired direction constructively at the base station receiver using a receive beamformer. A receive beamformer is a device that receives inputs from the various elements of an antenna array and combines them into output signals or beams based on certain criteria.

In addition, transmit beamformers may be used to enhance signals prior to their transmission by an antenna array. Transmit beamformers may apply weighting coefficients to the signal intended for any user before transmission by an antenna array such that the desired signal strength for the user is enhanced and/or that the interference caused by this user's signal to other users is reduced. The weighting coefficients applied by a transmit beamformer may be adjusted according to various measurements of the signals received from the desired user at the antenna array or any other knowledge of the user's angle of location from the antenna array. Using transmit beamforming weight coefficients, the signal intended for a desired user may be thought of as being "steered" toward the direction of the desired user, such that the signals strength for the desired user is maximized and interference caused by this signal to users located at other angles is reduced.

Mobile transceivers, such as cellular telephone handsets, may be referred to as user equipment (UE). Channel estimation by a mobile transceiver is very important to realize beamforming gains. In many wireless communication systems, including third generation (3G) systems such as Universal Mobile Telephone Service (UMTS), phase reference signals may be provided to assist mobile transceivers in performing channel estimation and synchronizing on a

received signal. The phase reference to be used by a mobile transceiver for a given communication session is typically specified by Radio Resource Control (RRC, or upper layer protocol) signaling. In UMTS and other systems, available phase references may include common pilot channels such as the primary common pilot channel (P-CPICH) and the secondary common pilot channel (S-CPICH). Another pilot channel, which may be referred to as a dedicated pilot channel (DPILOT) may be provided as well.

Because the mobile transceiver typically has no awareness that any type of beamforming is being applied (because of the proprietary nature of base station antenna configurations), the type of phase-reference that the mobile uses for its channel estimation and signal demodulation is an important aspect of the performance of the beamforming algorithm. Thus, beamformers have to be designed keeping in mind the phase-reference that a mobile transceiver is going to use.

Downlink beamforming is a method of signal transmission from a group of closely spaced antennas, such as a cellular telephone base station. Transmission from the base station may be designed such that the signals transmitted to a mobile transceiver all arrive co-phased at the mobile antenna. Because of the closely spaced nature of the base station antennas, the wireless channels from the base station antennas to the mobile antenna are all highly correlated. This correlation is represented by a spatial correlation matrix, which can be measured from uplink pilot signals. The spatial channel correlation is exploited by a beamformer, which applies appropriate complex weights to the signal at the different antenna elements. The weights may be designed such that a particular user's signals from all the transmitting antennas, after going through the channels, arrive coherently (or co-phased) at the user's receiving antenna. This typically results in a signal-to-interference ratio improvement of about a factor equal to the number of transmit antennas. As such, the design of a beamformer is an important element with respect to the performance of any multi-antenna system.

There are two types of beamformers that may be employed in a multi-antenna wireless system. One is the user-specific beamformer, which forms beams on a per user basis, one beam per user. This requires information on the user's channel characteristics, typically obtained through the spatial channel correlation matrix, which is computed based on an uplink pilot received when the mobile transceiver sends data to the base station. This correlation matrix essentially gives a measure of the direction in which the UE is located, which may allow a beamformer to form beams that point in that direction.

User specific beam forming has several shortcomings, however. User specific beamforming may employ the P-CPICH for channel estimation and synchronization purposes, but the P-CPICH may only be effective as a phase reference under certain conditions, such as when employed in systems with very few closely spaced antennas.

However, user specific beamforming strategies that are appropriate for systems that employ a very small number of closely spaced antennas may not work well when extended to systems that have many closely spaced antennas. This is because the correlation across the antennas decreases as the channel becomes more spatially scattered (leading to what is called as high angular spread). The problem of high angular spread arises when there are a large number of spatially dispersed local scatterers around the mobile user. Beamforming becomes less effective when angular spread is high because the signal energy arrives only partially co-phased at

the mobile antenna. Further, the fact that the P-CPICH phase-reference is not beamformed leads to much steeper degradation in performance because the pilot and traffic see different channels as angular spread increases. This is known as pilot-to-traffic mismatch and beamforming systems must perform within extremely strict tolerances to optimally realize beamforming benefits in the face of such mismatches.

The other typical type of beamforming system is known as a fixed beamforming system. In fixed beamforming systems, the base station does not form beams appropriate for each and every user, but rather forms a set of few common beams pointing in different predetermined directions, such that the whole cell area of interest is covered. These common beams are called fixed because they do not adapt to any particular user's location. However, these common beams can be made to change from time to time depending on various factors, such as changes in traffic load pattern and the like. As long as the beams are not designed to serve any one particular user, but rather meant to serve a common cellular sub-area, that type of system is referred to a fixed beamforming network.

Fixed beamforming does not suffer from the pilot-to-traffic mismatch problem because the common pilot may be a secondary common pilot channel (S-CPICH), which may be sent over the same fixed beam that is used to serve a user. A user who happens to be at the peak of a beam being used for signal transmission may see the maximum possible beamforming benefit. A steep decline in performance because of steep roll-off of the beam patterns may be experienced by users that are between two beams. This performance decline may be on the order of around three (3) dB for a four (4) antenna base-station.

Fixed beamforming, therefore, is intrinsically not fair, because users get different quality of service (QoS) depending on their geographic location. This situation is clearly undesirable. These "coverage gaps" can be minimized by defining more fixed beams, but defining more fixed beams entails an increased power allocation for the overhead channels. This is true because correspondingly more secondary common pilot channels S-CPICHs would be needed. Another option is to sweep the beams periodically in time. However, this strategy trades the performance losses among the different users in time and does not alleviate the problem of performance loss completely.

Further, if a user moves from the coverage area of one beam to another, there is a typical delay in signaling the user to change its phase-reference (S-CPICH ID) because higher-layer signaling is involved. Because of this delay, the user could continue to use an "old" phase reference for some time, resulting in a much greater degradation of performance. This is an important problem since the beams have a very sharp decline in gain in areas beyond their main coverage areas.

SUMMARY OF THE INVENTION

The disclosed embodiments relate to a system and method for providing user specific beams in a fixed beam network, the fixed beam network comprising a plurality of fixed beams, each of the plurality of fixed beams being defined by a plurality of fixed beam weighting coefficients. The system may comprise a device that computes reception correlation data for a received signal, and a beamformer that is adapted to determine transmission weighting coefficients to be applied to a return signal based on the difference between the reception correlation data and the fixed beam weighting coefficients associated with at least one of the plurality of fixed beams.

BRIEF DESCRIPTION OF THE DRAWINGS

Advantages of the invention may become apparent upon reading the following detailed description and upon reference to the drawings in which:

FIG. **1** is a block diagram illustrating a communication system in accordance with embodiments of the present invention;

FIG. **2** is a block diagram showing the deployment of fixed beams in a fixed beam network in accordance with embodiments of the present invention;

FIG. **3** is a schematic diagram showing the operation of a beamformer in accordance with embodiments of the present invention; and

FIG. **4** is a block diagram showing a mobile transceiver in accordance with an alternative embodiment of the present invention.

DETAILED DESCRIPTION OF SPECIFIC EMBODIMENTS

One or more specific embodiments of the present invention will be described below. In an effort to provide a concise description of these embodiments, not all features of an actual implementation are described in the specification. It should be appreciated that in the development of any such actual implementation, as in any engineering or design project, numerous implementation-specific decisions must be made to achieve the developers' specific goals, such as compliance with system-related and business-related constraints, which may vary from one implementation to another. Moreover, it should be appreciated that such a development effort might be complex and time consuming, but would nevertheless be a routine undertaking of design, fabrication, and manufacture for those of ordinary skill having the benefit of this disclosure.

Embodiments of the present invention may form user-specific beams in the presence of a fixed beamforming network. If the network is configured to support secondary common pilot channels (S-CPICHs), which are transmitted with fixed beamforming weights, the users can be made to use one of the S-CPICHs as a phase reference for demodulating their signal. In that case, sending the user's signals with the same fixed beamforming weights as their reference S-CPICH channel is straightforward, but entails loss of performance because of the mismatch between the fixed beamforming weights and the channel seen by that user.

An improved strategy for providing user specific beamforming in a fixed beamforming network may employ the principle that the phase reference is a known fixed beamforming weight vector, and thus is employed to calculate good dedicated weights for each user, taking into account the fact that the mobile transceiver has no knowledge that beamforming is taking place. Embodiments of the present invention may utilize the user-specific channel correlation matrix information from uplink measurements to steer the user's signal in the direction of the mobile transceiver.

Referring to the drawings, FIG. **1** is a block diagram illustrating a communication system in accordance with embodiments of the present invention. The communication system, which may comprise a cellular base station, is generally referred to by the reference numeral **10**. A beamformer **12** is connected to receive and transmit signals from

a plurality of antenna elements **16**, **18** and **20**. The antenna elements **16**, **18** and **20** present an antenna pattern **22**. The antenna pattern **22** is illustrative of the directions from which the antenna is likely to have the best reception of transmitted communication signals.

The antenna pattern **22** may comprise lobes, such as the lobes **24** and **28**. Additionally, the antenna pattern may comprise troughs such as the trough **26**. When processing received communication signals, the beamformer **12** may be adapted to provide fixed beams by employing weighting coefficient for received signal components indicative of a plurality of predefined directions. The beamformer **12** may employ dynamically controllable weighting coefficients to mathematically give greater weight to signals received from the predefined directions when producing its output signal.

The beamformer **12** is connected to processing circuitry **14**, which may perform processing on communication signals after they are received or prior to being transmitted. As set forth above, the beamformer may be intended to provide a fixed beam communication network. Additionally, the beamformer **12** may be adapted to provide individualized beams to a plurality of users even though those users may not be in the general proximity of one of the predefined beams of the system **10**. The use of the beamformer **12** to provide a fixed beam network is discussed below with respect to FIG. **2**.

FIG. **2** is a block diagram showing the deployment of fixed beams in a fixed beam network in accordance with embodiments of the present invention. The fixed beam network is generally referred to by the reference numeral **100**. As illustrated in FIG. **2**, embodiments of the present invention relate to the incorporation of user specific beamforming in a fixed beam network in which common pilot synchronizing signals are sent over the fixed beams. The optimal user-specific open-loop beamformer when the demodulation of the signal is performed via a pre-determined fixed beam phase reference is derived. The beamformer **12** (FIG. **1**) may be applicable for an arbitrary antenna configuration without any assumptions on the channel covariance matrix. By way of example, a three-element antenna array is illustrated in FIG. **2**.

In FIG. **2**, the fixed beam network **100** is established by a three-element antenna array that comprises antenna elements **102**, **104** and **106**. The antenna array may comprise a portion of a cellular telephone base station or the like. A beamformer such as the beamformer **12** (FIG. **1**) is adapted to provide three fixed beams **110**, **112** and **114**. Each of the fixed beams **110**, **112** and **114** provide a coverage envelope where reception is the strongest. In FIG. **2**, the fixed beams **110**, **112** and **114** respectively provide coverage envelopes **118**, **120** and **122**.

The fixed beam system **100** may include circuitry or software (not shown) that assigns a particular beam to a particular user when the user is in the proximity of one of the coverage envelopes **118**, **120** or **122**. When a user is between one of the fixed beams, the user's reception would be degraded compared to when the user is within one of the coverage envelopes **118**, **120** or **122**.

The following discussion employs UMTS terminology and assumes the pilot structure to be available as in UMTS, although the concepts developed are applicable in principle to any wireless system that allows for such pilot configurations. In wireless communication systems, pilot channels provide a known phase reference synchronization signal that may be used by a mobile transceiver to locate data elements within the transmitted data packets.

In UMTS systems, there are three standard phase-references that may be employed by a mobile transceiver to perform channel estimation and assist in signal synchronization. One is the primary common pilot channel (P-CPICH), which is typically a common pilot transmitted over the whole cell of interest by a single antenna.

The second type of pilot that may be employed as a phase reference signal is the secondary common pilot channel (S-CPICH). More than one S-CPICH may be employed in each cell. As set forth below, the S-CPICH may be beamformed with fixed beams, with one pilot going out per beam. At the time of call initiation, the user's S-CPICH ID may be determined based on that user's uplink signal. The base station sends certain signal strength measurements to the Radio Network Controller (RNC), which then decides which beam is ideally suited for that user (if that user is configured to use S-CPICH as phase-reference). Then, knowing the mapping between the beams and the S-CPICH ID, the RNC may convey both to the user and to the base station, the S-CPICH ID that the user is going to use for its demodulation. The beam corresponding to this S-CPICH ID may be termed as the serving beam for that user. The RNC can also decide to switch the S-CPICH ID (or equivalently, the serving beam) if uplink measurements indicate that the user has moved into the area of another beam.

The third pilot that may be used for phase reference purposes is the dedicated pilot (DPILOT), which is time-multiplexed with the user's data signal. At first glace, the DPILOT seems to be the best choice as far as phase-reference is concerned in beamformed systems because the DPILOT is also beamformed with the same weights that the data is transmitted with, resulting in a perfectly matched channel estimate. However, the DPILOT is a very weak pilot and the number of symbols available for channel estimation is also limited, leading to a very noisy channel estimate. Thus, DPILOT is very unreliable and cannot be used for beamformed systems. Simulations have shown that using the DPILOT as phase-reference results in much degraded beamforming performance.

Each of the fixed beams **110**, **112** and **114** in FIG. **2** are shown as incorporating secondary common pilot channels (S-CPICHs) therein. The fixed beam **110** incorporates secondary common pilot channels **126**, **128**, **130** and **132**, which maybe used for synchronization by user equipment. The use of the secondary common pilot channels **126**, **128**, **130** and **132** typically improves user reception and does not result in traffic to pilot mismatch. The fixed beams **112** and **114** are illustrated to have secondary common pilot channels incorporated therein, but those secondary common pilot channels are not given reference numerals for purposes of simplifying FIG. **2**.

As set forth above, embodiments of the present invention may employ beam steering to create user specific beams, providing a benefit accrued by sending the user's signals over the same fixed beam that the user is configured to demodulate as its phase reference (for example, the secondary common pilot channel). For example, if a mobile user **126** is between the coverage envelopes **118** and **120** provided by the fixed beams **110** and **112**, as shown in FIG. **2**, a beamformer may be adapted to provide a user specific beam **128** directed at the mobile user **126** to improve the user's reception.

As set forth above, embodiments of the present invention may create user-specific beams in the presence of a fixed beamforming network. If the network is configured to support S-CPICHs, which are transmitted with fixed beamforming weights, the users can be made to use one of the

S-CPICH's as a phase reference for demodulating their signal. In that case, sending the users signals with the same fixed beamforming weights as their reference S-CPICH channel is straightforward, but entails loss of performance due to the fact that none of the fixed beams is optimally appropriate for a particular user.

Embodiments of the present invention may employ the principle that dedicated weights for each user can be computed because the phase reference signal (S-CPICH) is a channel that is seen from a known fixed beamforming weight vector. This computation implicitly accounts for the fact that the mobile has no knowledge of any such beamforming being applied. This beamformer utilizes the user-specific channel correlation matrix information from uplink measurements to steer the user's signal in the direction of the user's mobile transceiver. The beamformer then determines transmission weighting coefficients to be applied to a return signal based on the difference between the reception correlation data and the fixed beam weighting coefficients associated with the S-CPICH that has been designated for the user's communication session.

The following discussion illustrates how a user specific beamformer is determined in the context of a fixed beam network environment. On the downlink, it may be assumed that the signal for a user is beamformed with M closely spaced transmitting antennas. The beamformed is given by an M -dimensional complex valued weight vector v_o. Let the lth multipath channel from the transmit antennas to the mobile receive antenna be denoted by h_l, where l=1, 2, . . . , L. As used herein, x^*, x^T and x^{554} denote the conjugate, transpose and Hermitian operations for a vector x. Further, $\Re\{\bullet\}$ and $\Im\{\bullet\}$ denote the real and imaginary parts of a complex-valued entity. M fixed beams are defined, given by weight matrix $W=[w_1, w_2, \ldots, w_M]$ with the property that:

$$w_i^{\dagger} w_j = 0 \text{ if } i \neq j \text{ and}$$

$$\|w_i\|^2 = 1 i = 1, 2, \ldots, M \tag{1}$$

Each fixed beam vector w_i is used to carry one S-CPICH pilot.

The received signal at the mobile, for the lth multipath channel and the ith symbol instance, after despreading with the scrambling and channelization codes, is given by:

$$y_l(i) = \sqrt{P} v^T h_l(i) s(i) + n_l(i) \tag{2}$$

Here, s(i) is the binary information symbol to be transmitted, $P=NE_c$, where N is the spreading gain of a code division multiple access (CDMA) signal and E_c is the transmit energy per chip for that user. The random interference plus noise component $n_l(i)$ is complex-valued zero-mean Gaussian distributed with variance equal to σ_l^2. Further, $h_l(i)$ is a zero-mean complex Gaussian channel with correlation matrix $R_{hh}(l)$ that can be estimated from uplink measurements. The reception correlation data that comprises the correlation matrix $R_{hh}(l)$ is obtained from uplink communications from a mobile transceiver and may be based on received pilot signals transmitted by the mobile transceiver. These signals may indicate the direction of the mobile transceiver with respect to the base station. This long-term correlation matrix estimation has as input, the uplink channel estimate, denoted by $\hat{h}_l$, for the lth multipath:

$$R_{hh}(l) = \alpha R_{hh} + (1-\alpha) \hat{h}_l^* \hat{h}_l^T \tag{3}$$

The best beam that is used to serve as a phase-reference for that user is determined as follows:

$$m = \arg\max_{k=1,\ldots,M} \sum_{l=1}^{L} w_k^{\dagger} R_{hh}(l) w_k \tag{4}$$

Using this, the user is signaled via RRC layer signaling to use the S-CPICH ID that corresponds to the fixed beam m.

The optimal beamformer v_o is computed as a weighted linear combination of the fixed beam weight vectors as follows:

$$v_o = Wu = \sum_{i=1}^{M} u(i) w_i \tag{5}$$

Further, a "virtual channel" vector may be defined as:

$$g_l(i) = W^T h_l(i) = [w_1^T h_l(i), \ldots, w_M^T h_l(i)]^T \tag{6}$$

with a correlation matrix given by:

$$R_{gg}(l) = W^T R_{hh}(l) W^* \tag{7}$$

The decision statistic for the detection of s at the mobile, using the channel estimate from the S-CPICH, is given by

$$\begin{aligned} z &= \sum_{l=1}^{L} \Re\{(w_m^T h_l(i))^* y_l(i)\} \\ &= \sum_{l} \Re\left\{ g_{m,l}(i)^* \left(\sqrt{P} \sum_{k=1}^{M} u_k g_{k,l}(i) s(i) + n_l(i) \right) \right\} \end{aligned} \tag{8}$$

where $g_{m,l}(i)$ is the mth component of $g_l(i)$ and the S-CPICH channel estimate is assumed to be ideal.

This virtual channel may be expressed in terms of the phase-reference channel estimate $g_{m,l}(i)$, as:

$$g_l(i) = g_{m,l}(i) p_l + q_l(i) \tag{9}$$

with $E[g_{m,l}(i)^* q_l(i)] = 0$

Let $\rho_{mk}(l) = E[g^*_{m,l} g_{k,l}]$ and $\sigma_g^2(m,l) = E[|g_{m,l}|^2]$. Then define

$$\begin{aligned} p_l &= \left[\frac{\rho_{m1}(l)}{\sigma_g^2(m,l)}, \ldots, 1, \ldots, \frac{\rho_{mM}(l)}{\sigma_g^2(m,l)} \right]^T \\ &= \left[\frac{w_m^{\dagger} R_{hh}(l) w_1}{w_m^{\dagger} R_{hh}(l) w_m}, \ldots, \frac{w_m^{\dagger} R_{hh}(l) w_M}{w_m^{\dagger} R_{hh}(l) w_m} \right]^T \end{aligned} \tag{10}$$

where the unity appears in the mth position in the first equation. Define the sum correlation matrix of the zero-mean complex-valued Gaussian distributed vector q_l overall all paths, as:

$$Q = Q_1 + jQ_2 = \sum_{l=1}^{L} [R_{gg}(l) - \sigma_g^2(m,l) p_l^* p_l^T] \tag{11}$$

where $j=\sqrt{-1}$. Define $X=[(Q_1+\gamma I)+Q_2(Q_1+\gamma I)^{-1}, Q_2]^{-1}$, where $\gamma>0$ is an estimate of the noise variance at the receiver. This can be set to a nominal value depending on the average user geometries. Then, the optimal beamformer is given by:

$$v_o = \frac{1}{\kappa} W(I + j(Q_1 + \gamma I)^{-1} Q_2) X \overline{p}^* \tag{12}$$

where

$$\overline{p} = \sum_{l=1}^{L} p_l$$

and $\kappa>0$ is a normalization constant to ensure $\|v_o\|^2=1$. The overall process for the computation of a user specific beam in the context of a fixed beam network is described below with reference to FIG. **3**.

FIG. **3** is a schematic diagram showing the operation of a beamformer in accordance with embodiments of the present invention. The system shown in FIG. **3**, which may correspond to a cellular telephone base station, is generally referred to by the reference numeral **200**.

The system shown in FIG. **3** comprises four closely spaced antenna elements **202**, **204**, **206** and **208**. For purposes of simplicity, the system **200** is illustrated as acting on a single user's signal, which is identified as s_k.

The antenna elements **202**, **204**, **206** and **208** respectively produce a plurality of fixed beams **210**, **212**, **214** and **216**. A beamformer, such as the beamformer **12** (FIG. **1**) may be adapted to transmit a signal on a user specific beam relative to one of the fixed beams **210**, **212**, **214** and **216**, as described above. In so doing, transmission coefficients are computed and applied to the antenna elements **202**, **204**, **206** and **208** when the signal s_k is transmitted. Transmission coefficients represented as v_o in FIG. **3** may be applied to the signal s_k by a series of multipliers **210**, **212**, **214** and **216**. One transmission coefficient for each of the fixed beams **210**, **212**, **214** and **216** may be applied to the signal s_k

In operation, the beamformer **12** (FIG. **1**) may compute reception correlation data for a received signal, as shown at block **222**. The reception correlation data may represent an uplink channel correlation matrix $R_{hh}(\mathbf{1})$, which may be computed according to Equation 3 above. As shown at block **220**, the reception correlation data may be employed to compute a beam space channel correlation matrix $R_{gg}(\mathbf{1})$ and a beam space correlation vector p(**1**), which represent the difference between the reception correlation data and the fixed beam correlation coefficients associated with the fixed beam **210**, **212**, **214** or **216** assigned for the particular transmission. The beam space channel correlation matrix $R_{gg}(\mathbf{1})$ may be computed according to Equation 7 above and the beam space correlation vector p(**1**) may be computed according to Equation 10 above.

Finally, the beam space channel correlation matrix $R_{gg}(\mathbf{1})$ and the beam space correlation vector p(**1**) may be employed to compute an optimal beamforming weight vector v_0, as shown at block **218**. The beamforming weight vector v_0 may be computed as shown in Equation 12 above. As set forth above, the beamforming weight vector v_0, may be applied to the signal s_k as it is transmitted.

Embodiments of the present invention may be compliant with Release 99 and Release 5/6 of UMTS standards. In order to maintain that compliance, beam selection is done initially at the time of call set-up. The initial beam that is selected may be updated at a very slow rate, because any change in beam would require a change in the S-CPICH ID phase reference, which may require an RRC signaling request. This approach may be referred to as the quasi-static beam reference user specific beamforming approach.

Embodiments of the present invention may provide improvements that are transparent to a user who is using a mobile transceiver. Additionally, embodiments of the present invention may be standards compliant and may not require any change in current specifications. Performance enhancements when multiple S-CPICHs are allowed to be used as phase references by the user equipment are possible, although that case may not be strictly compliant with the current UMTS standards.

For channels with small angle-spread, embodiments of the present invention may provide improved performance. Specifically, embodiments of the present invention may achieve improved beamforming gain for a given number of antennas. For larger angle-spreads, performance may approach that of a pure fixed beamforming system, which may make communication systems more robust to angle-spread than a system in which the primary common pilot channel (P-CPICH) is employed as the phase reference.

Embodiments of the present invention may be fair, in that all users may get similar performance irrespective of their geographic location. Additionally, embodiments of the present invention may be more robust to delays in signaling a change in phase-reference. When a user moves from the coverage area of one beam to another, RRC layer signaling may be involved to indicate the mobile to change the phase-reference to another S-CPICH ID.

Embodiments of the present invention may avoid scalloping losses inherently, without the added complexity and cost associated with systems in which many non-orthogonal beams per sector are defined or systems that apply beam sweeping (a concept similar to the phase sweep transmit diversity (PSTD)). In addition, the optimal beam sweeping frequency for dedicated channels can differ significantly from the optimal frequency for shared channels-a problem in mixed traffic environments. The computational complexity employed in embodiments of the present invention may be similar to the complexity of user-specific beamformers.

Alternative embodiments of the present invention may employ fast beam selection, which may rely on input derived from a mobile transceiver. In that case, the mobile transceiver, which could be a cellular telephone handset, computes the best beam (or the best S-CPICH channel) at every slot and feeds back this information to the base station. Further, it may be possible to incorporate this feedback within the current feedback bit-rate available. A cellular handset that is adapted to employ fast beam selection is illustrated in FIG. **4**.

FIG. **4** is a block diagram showing a mobile transceiver in accordance with an alternative embodiment of the present invention. The mobile transceiver, which may comprise a cellular telephone handset, is generally referred to by the reference numeral **300**. The mobile transceiver may comprise an antenna **302**, which may be adapted to send and receive signals to and from a base station, such as a cellular telephone base station. A beam computing unit **304**, which may comprise software, hardware or a combination of both, may be adapted to determine the ID of a fixed beam that is being used to transmit information between the mobile transceiver **300** and a base station.

At the beginning of a call, the RRC may identify to the mobile transceiver **300** and the associated base station a set of two S-CPICH IDs that the mobile transceiver **300** could use as a phase-reference during a communication session. One of these S-CPICHs may be denoted as the first S-CPICH and the other may be designated as a second S-CPICH. At every slot, the beam computing unit **304** may measure the signal to noise ratio on the two S-CPICHs that it has been told to monitor. The mobile transceiver **300** may signal the best S-CPICH ID back to the base station, using one bit of feedback per slot (which is compatible with the current allowed feedback bit rate in UMTS). If the best S-CPICH is the first S-CPICH ID, the feedback bit is set to a specific value, such as 1. If the best S-CPICH ID is the second S-CPICH, the feedback bit may be set to a different value, such as 0 or −1. In this manner, the base station, at every time slot, may compute the best beamforming weight vector using Equations 10, 11 and 12 based on the position of the mobile transceiver **300** relative to the beams associated with either the primary S-CPICH or the secondary S-CPICH.

Recomputing these equations may result in the beamforming taking into account an improved beam index m, which may change from slot to slot. The performance improvements obtained with this scheme, in comparison to the quasi-static beam reference case, may be significant for users that are in between beams because they exhibit the most variation in the best S-CPICH phase-reference.

Embodiments of the present invention may allow the, users in between beams to benefit because of the fact that the two S-CPICH channels for them are almost identical in average strength, leading to great gains with selection transmit diversity. Moreover, embodiments of the present invention may be incorporated with very minimal changes to the current standards such as the UMTS standard. This is true because only a single bit of feedback is required per slot, which is supported by the existing UMTS standard. For users that are at the peak of a fixed beam to begin with, an embodiment of the present invention may result in almost identical performance as that of the quasi-static beamforming systems.

While the invention may be susceptible to various modifications and alternative forms, specific embodiments have been shown by way of example in the drawings and have been described in detail herein. However, it should be understood that the invention is not intended to be limited to the particular forms disclosed. Rather, the invention is to cover all modifications, equivalents, and alternatives falling within the spirit and scope of the invention as defined by the following appended claims.

What is claimed is:

1. A system that provides user specific beams in a fixed beam network, the fixed beam network comprising a plurality of fixed beams, each of the plurality of fixed beams being defined by a plurality of fixed beam correlation coefficients, the system comprising:

a device that computes reception correlation data for a received signal; and

beamformer that is adapted to determine transmission weighting coefficients to be applied to a return signal based on the difference between the reception correlation data and the fixed beam weighting coefficients associated with at least one of the plurality of fixed beams.

2. The system set forth in claim **1**, comprising a device that identifies one of a plurality of common phase reference signals, the fixed beam weighting coefficients of which are to be used in determining the transmission weighting coefficients for a return transmission.

3. The system set forth in claim **1**, wherein the system comprises at least a portion of a cellular telephone base station.

4. The system set forth in claim **1**, wherein the transmission weighting coefficients are computed according the formula

$$v_o = \frac{1}{\kappa} W(I + j(Q_1 + \gamma I)^{-1} Q_2) X \overline{p}^*.$$

5. The system set forth in claim **1**, wherein each of the fixed beams is associated with a common phase reference.

6. The system set forth in claim **5**, wherein each of the common phase references comprises a secondary common pilot channel (S-CPICH).

7. The system set forth in claim **1**, wherein the transmission weighting coefficients may be expressed as a weighting matrix.

8. A method for providing user specific beams in a fixed beam network, the fixed beam network comprising a plurality of fixed beams, each of the plurality of fixed beams being defined by a plurality of fixed beam correlation coefficients, the method comprising the acts of:

computing reception correlation data for a received signal; and

determining transmission weighting coefficients to be applied to a return signal based on the difference between the reception correlation data and the fixed beam weighting coefficients associated with at least one of the plurality of fixed beams.

9. The method set forth in claim **8**, comprising the act of identifying one of the plurality of fixed beams, the fixed beam weighting coefficients of which are to be used in determining the transmission weighting coefficients for a return transmission.

10. The method set forth in claim **8**, comprising the act of calculating the transmission weighting coefficients according the formula

$$v_o = \frac{1}{\kappa} W(I + j(Q_1 + \gamma I)^{-1} Q_2) X \overline{p}^*.$$

11. The method set forth in claim **8**, comprising the act of defining each of the fixed beams to be associated with a common phase reference.

12. The method set forth in claim **11**, comprising the act of defining each of the common phase references to comprise a secondary common pilot channel (S-CPICH).

13. The method set forth in claim **8**, comprising the act of expressing the transmission weighting coefficients as a weighting matrix.

14. A tangible machine readable medium comprising:

code adapted to compute reception correlation data for a received signal; and

code adapted to determine transmission weighting coefficients to be applied to a return signal based on the difference between reception correlation data and fixed beam weighting coefficients associated with at least one of a plurality of fixed beams in a fixed beam network.

15. The tangible medium, as set forth in claim **14**, comprising:

code adapted to identify one of the plurality of fixed beams, the fixed beam weighting coefficients of which are to be used in determining the transmission weighting coefficients for a return transmission.

16. The tangible medium, as set forth in claim **14**, comprising:

code adapted to define each of the fixed beams to be associated with a common phase reference.

17. The tangible medium, as set forth in claim **16**, comprising:

code adapted to define each of the common phase references to comprise a secondary common pilot channel (S-CPICH).

18. A system comprising:

a device that computes reception correlation data for a received signal; and

a beamformer configured to provide user specific beams in a fixed beam network, wherein the beamformer adapted to determine transmission weighting coefficients to be applied to a return signal based on the difference between the reception correlation data and one or more fixed beam weighting coefficients.

19. The system, as set forth in claim **18**, wherein the beamformer is adapted to determine transmission weighting coefficients associated with at least one of a plurality of fixed beams.

* * * * *