IN THE UNITED STATES PATENT AND TRADEMARK OFFICE

In re *Inter Partes* Review of:	)
U.S. Patent No. 10,965,512	)
Issued: Mar. 30, 2021	)
Application No.: 17/012,813	)
Filing Date: Sep. 4, 2020	)

For: **Method And Apparatus Using Cell-Specific And Common Pilot Subcarriers In Multi-Carrier, Multi Cell Wireless Communication Networks**

DECLARATION OF TODOR COOKLEV IN SUPPORT OF PETITION FOR *INTER PARTES* REVIEW OF U.S. PATENT NO. 10,965,512

TABLE OF CONTENTS

I. INTRODUCTION 1

II. GROUNDS OF UNPATENTABILITY 2

III. QUALIFICATIONS 3

IV. MATERIALS CONSIDERED 6

V. LEGAL UNDERSTANDING 8

- A. My Understanding of Claim Construction 8
- B. My Understanding of Obviousness 9
- C. A Person of Ordinary Skill in the Art 12

VI. OVERVIEW OF THE ’512 PATENT 13

VII. TECHNOLOGY OVERVIEW 15

- A. Cellular systems implemented OFDM and OFDMA for providing downlink signals 16
- B. OFDM/OFDMA cellular systems implemented pilot signals for channel estimation and data recovery 21
- C. OFDM/OFDMA systems implemented multiple types of pilot symbols 25
- D. Cellular systems routinely implemented beamforming for transmitting downlink signals 26

VIII. PROSECUTION HISTORY SUMMARY 27

IX. LEVEL OF ORDINARY SKILL IN THE ART 27

X. CLAIM CONSTRUCTION 28

XI. OVERVIEW OF THE PRIOR-ART 28

- A. Kim 28
- B. Ketchum 34
- C. Tong 38
- D. Li 39
- E. Smee 40

XII. GROUND 1: THE COMBINATION OF KIM AND TONG TEACHES CLAIMS 1-30. 42

Ford Motor Co.
Exhibit 1035
Page 002

A. A POSA would have been motivated to combine Kim and Tong 42

1. A POSA would have been motivated to implement beamforming in Kim's base station, as taught by Tong. 42

2. A POSA would have been motivated to use Kim's pilots for channel estimation, and to recover the transmitted data, as taught by Tong. 47

B. Independent Claim 1. 51

1. [1.P]: An orthogonal frequency division multiple access (OFDMA)-compatible base station that uses subcarriers in a frequency domain and time slots in a time domain, the OFDMA-compatible base station comprising: 51

2. [1.1] a plurality of antennas; and a transmitter operably coupled to the plurality of antennas; 53

3. [1.2] the transmitter configured to: insert first pilots of a first type onto a first plurality of subcarriers, wherein the first pilots are cell-specific pilots; and 54

4. [1.3] insert data and second pilots of a second type onto a second plurality of subcarriers; 57

5. [1.4] wherein at least some subcarriers of the first plurality of subcarriers or the second plurality of subcarriers are beam-formed; and 61

6. [1.5] the plurality of antennas configured to transmit the first plurality of subcarriers and the second plurality of subcarriers in at least one of the time slots; 63

7. [1.6] wherein the second type is different than the first type and wherein the first pilots do not interfere with the second pilots. 66

C. Independent Claim 8 67

1. [8.P] A method performed by an orthogonal frequency division multiple access (OFDMA)-compatible base station that uses subcarriers in a frequency domain and time slots in a time domain, the method comprising: 67

Ford Motor Co.
Exhibit 1035
Page 003

2. [8.1] inserting, by the OFDMA-compatible base station, first pilots of a first type onto a first plurality of subcarriers, wherein the first pilots are cell-specific pilots; 68

3. [8.2] inserting, by the OFDMA-compatible base station, data and second pilots of a second type onto a second plurality of subcarriers; 68

4. [8.3] wherein at least some subcarriers of the first plurality of subcarriers or the second plurality of subcarriers are beam-formed; and 68

5. [8.4] transmitting, by the OFDMA-compatible base station, the first plurality of subcarriers and the second plurality of subcarriers in at least one of the time slots using a plurality of antennas; 68

6. [8.5] wherein the second type is different than the first type and wherein the first pilots do not interfere with the second pilots. 69

D. Independent Claim 15 69

1. [15.P] An orthogonal frequency division multiple access (OFDMA)-compatible mobile station that uses subcarriers in a frequency domain and time slots in a time domain, the OFDMA-compatible mobile station comprising: 69

2. [15.1] at least one antenna; and a receiver; and 70

3. [15.2] the at least one antenna and the receiver are configured to: receive first pilots of a first type on a first plurality of subcarriers, wherein the first pilots are cell-specific pilots; and 71

4. [15.3] receive second pilots of a second type and data on a second plurality of subcarriers, wherein the first plurality of subcarriers and the second plurality of subcarriers are received in at least one of the time slots; 72

5. [15.4] wherein at least some subcarriers of the first plurality of subcarriers or the second plurality of subcarriers are beam-formed; and 72

Ford Motor Co.
Exhibit 1035
Page 004

6. [15.5] the receiver is further configured to: recover the data using channel estimates from at least the second pilots; and 73

7. [15.6] recover cell-specific information using the cell-specific pilots; 76

8. [15.7] wherein the second type is different than the first type and wherein the first pilots do not interfere with the second pilots. 76

E. Independent Claim 23 77

1. [23.P] A method performed by an orthogonal frequency division multiple access (OFDMA)-compatible mobile station that uses subcarriers in a frequency domain and time slots in a time domain, the method comprising: 77

2. [23.1] receiving first pilots of a first type on a first plurality of subcarriers, wherein the first pilots are cell-specific pilots; 77

3. [23.2] receiving second pilots of a second type and data on a second plurality of subcarriers, wherein the first plurality of subcarriers and the second plurality of subcarriers are received in at least one of the time slots; 77

4. [23.3] wherein at least some subcarriers of the first plurality of subcarriers or the second plurality of subcarriers are beam-formed; 78

5. [23.4] recovering the data using channel estimates from at least the second pilots; and 78

6. [23.5] recovering cell-specific information using the cell-specific pilots; 78

7. [23.6] wherein the second type is different than the first type and wherein the first pilots do not interfere with the second pilots. 78

F. Claims 2, 9, 16, and 24 78

G. Claims 3, 10, 17, and 25 79

H. Claims 4, 11, 18, and 26 82

I. Claims 5, 12, 21, and 29 82

Ford Motor Co.
Exhibit 1035
Page 005

J. Claims 6, 13, 20, and 28 83

K. Claims 7 and 14 84

L. Claims 19 and 27 84

M. Claims 22 and 30 85

XIII. GROUND 2: THE COMBINATION OF KETCHUM AND LI TEACHES CLAIMS 1, 3, 4, 6-8, 10, 11, 13-15, 17, 18, 20, 22, 23, 25, 26, 28, AND 30 86

A. A POSA would have been motivated to combine Ketchum and Li 86

B. Independent Claim 1. 90

1. [1.P]: An orthogonal frequency division multiple access (OFDMA)-compatible base station that uses subcarriers in a frequency domain and time slots in a time domain, the OFDMA-compatible base station comprising: 90

2. [1.1] a plurality of antennas; and a transmitter operably coupled to the plurality of antennas; 93

3. [1.2] the transmitter configured to: insert first pilots of a first type onto a first plurality of subcarriers, wherein the first pilots are cell-specific pilots; and 94

4. [1.3] insert data and second pilots of a second type onto a second plurality of subcarriers; 99

5. [1.4] wherein at least some subcarriers of the first plurality of subcarriers or the second plurality of subcarriers are beam-formed; and 103

6. [1.5] the plurality of antennas configured to transmit the first plurality of subcarriers and the second plurality of subcarriers in at least one of the time slots; 103

7. [1.6] wherein the second type is different than the first type and wherein the first pilots do not interfere with the second pilots. 104

C. Independent Claim 8 106

Ford Motor Co.
Exhibit 1035
Page 006

1. [8.P] A method performed by an orthogonal frequency division multiple access (OFDMA)-compatible base station that uses subcarriers in a frequency domain and time slots in a time domain, the method comprising: 106

2. [8.1] inserting, by the OFDMA-compatible base station, first pilots of a first type onto a first plurality of subcarriers, wherein the first pilots are cell-specific pilots; 107

3. [8.2] inserting, by the OFDMA-compatible base station, data and second pilots of a second type onto a second plurality of subcarriers; 107

4. [8.3] wherein at least some subcarriers of the first plurality of subcarriers or the second plurality of subcarriers are beam-formed; and 107

5. [8.4] transmitting, by the OFDMA-compatible base station, the first plurality of subcarriers and the second plurality of subcarriers in at least one of the time slots using a plurality of antennas; 107

6. [8.5] wherein the second type is different than the first type and wherein the first pilots do not interfere with the second pilots. 108

D. Independent Claim 15 108

1. [15.P] An orthogonal frequency division multiple access (OFDMA)-compatible mobile station that uses subcarriers in a frequency domain and time slots in a time domain, the OFDMA-compatible mobile station comprising: 108

2. [15.1] at least one antenna; and a receiver; and 109

3. [15.2] the at least one antenna and the receiver are configured to: receive first pilots of a first type on a first plurality of subcarriers, wherein the first pilots are cell-specific pilots; and 110

4. [15.3] receive second pilots of a second type and data on a second plurality of subcarriers, wherein the first plurality of subcarriers and the second plurality of subcarriers are received in at least one of the time slots; 110

Ford Motor Co.
Exhibit 1035
Page 007

5. [15.4] wherein at least some subcarriers of the first plurality of subcarriers or the second plurality of subcarriers are beam-formed; and.....111

6. [15.5] the receiver is further configured to: recover the data using channel estimates from at least the second pilots; and.....111

7. [15.6] recover cell-specific information using the cell-specific pilots;.....112

8. [15.7] wherein the second type is different than the first type and wherein the first pilots do not interfere with the second pilots.....112

E. Independent Claim 23 113

1. [23.P] A method performed by an orthogonal frequency division multiple access (OFDMA)-compatible mobile station that uses subcarriers in a frequency domain and time slots in a time domain, the method comprising:.....113

2. [23.1] receiving first pilots of a first type on a first plurality of subcarriers, wherein the first pilots are cell-specific pilots;.....113

3. [23.2] receiving second pilots of a second type and data on a second plurality of subcarriers, wherein the first plurality of subcarriers and the second plurality of subcarriers are received in at least one of the time slots; 113

4. [23.3] wherein at least some subcarriers of the first plurality of subcarriers or the second plurality of subcarriers are beam-formed; 113

5. [23.4] recovering the data using channel estimates from at least the second pilots; and.....114

6. [23.5] recovering cell-specific information using the cell-specific pilots; 114

7. [23.6] wherein the second type is different than the first type and wherein the first pilots do not interfere with the second pilots.....114

F. Claims 3, 10, 17, and 25.....114

G. Claims 4, 11, 18, and 26.....116

Ford Motor Co.
Exhibit 1035
Page 008

H. Claims 6, 13, 20, and 28 117

I. Claims 7 and 14 117

J. Claims 22 and 30 118

XIV. GROUND 3: THE COMBINATION OF KETCHUM, LI, AND SMEE TEACHES CLAIMS 5, 12, 21, AND 29 119

XV. CONCLUSION 124

Ford Motor Co.
Exhibit 1035
Page 009

I, Todor Cooklev, declare as follows:

I. INTRODUCTION

1. I have been retained by Latham & Watkins on behalf of Ford Motor Company ("Ford" and/or "Petitioner") for the above-captioned *inter partes* review proceeding. I understand that this proceeding involves U.S. Patent No. 10,965,512 ("the '512 patent"), titled "Method and Apparatus Using Cell-Specific and Common Pilot Subcarriers in Multi-Carrier, Multi-Cell Wireless Communication Networks," and that the '512 patent is currently assigned to Neo Wireless LLC ("Patent Owner").

2. Specifically, I have been retained as a technical expert by Ford to study and provide my opinions on the technology claimed in, and the patentability or unpatentability of, claims 1-30 of the '512 patent ("the challenged claims"). This declaration is directed to the challenged claims of the '512 patent, and sets forth the opinions I have formed, the conclusions I have reached, and the bases for each. For purposes of this declaration, I was not asked to provide any opinions that are not expressed herein.

3. I am familiar with the technology described in the '512 patent as of its earliest possible priority date of January 29, 2004. I have been asked to provide my technical review, analysis, insights, and opinions regarding the '512 patent. I have used this experience and insight along with the above-noted references as the basis

for the grounds of unpatentability set forth in the Petition for *inter partes* review of the ’512 patent.

4. I have reviewed and am familiar with the specification of the ’512 patent issued on March 30, 2021. I understand that the ’512 patent has been provided as EX1001. I will cite to the specification using the following formats: EX1001, ’512 patent, 1:1-10 (long form) and EX1001, 1:1-10 (short form). These example citations both point to the ’512 patent specification at column 1, lines 1-10. I was further asked to review the documents filed as part of IPR2022-01539 by Volkswagen Group of America, Inc., including the Declaration of Paul Min, Ph.D. (EX1003) and its associated exhibits. I agree with Dr. Min’s analysis and conclusions. Therefore, I have incorporated his analysis into this declaration.

5. I am being compensated by Ford at my standard hourly rate of $700 for the time I spend in connection with this proceeding. My compensation is not dependent in any way on the substance of my opinions or in the outcome of this proceeding.

6. I am over 18 years of age. I have personal knowledge of the facts stated in this declaration and could testify competently to them if asked to do so.

II. GROUNDS OF UNPATENTABILITY

7. In forming my opinions about the ’512 patent, I have considered the following grounds of unpatentability. Based on my review of the prior art

references that form the basis of these grounds, it is my opinion that claims 1-30 of the ’512 patent would have been obvious to a person of ordinary skill in the art (“POSA”) as of January 29, 2004.

Ground	Basis	Claims	References
1.	§ 103	1-30	Kim in view of Tong
2.	§ 103	1, 3, 4, 6-8, 10, 11, 13-15, 17, 18, 20, 22, 23, 25, 26, 28, and 30	Ketchum in view of Li
3.	§ 103	5, 12, 21, and 29	Ketchum in view of Li and further in view of Smee

8. I have been asked to consider how a POSA would have understood the challenged claims in light of the disclosures of the ’512 patent. I also have been asked to consider how a POSA would have understood the prior art references Kim, Tong, Ketchum, Li, and Smee.

9. Further, I have been asked to consider and provide my technical review, analysis, insights, and opinions regarding whether a POSA would have understood that the combinations of the prior art references listed in the table above render obvious claims 1-30 of the ’512 patent.

III. QUALIFICATIONS

10. In formulating my opinions, I have relied upon my training, knowledge, and experience in the relevant art.

11. My qualifications are stated more fully in my *curriculum vitae*, which has been provided as Exhibit 1036. Here, I provide a brief summary of my qualifications.

12. I am currently Professor of Electrical and Computer Engineering at Purdue University in Fort Wayne, Indiana, where I have had several administrative positions.

13. My current research interests include most aspects of modern wireless systems, including hardware and software architectures. A significant part of my research is specifically focused on standards-related issues. I have received a number of research grants in these areas. My research has been funded by DARPA, the Air Force Research Laboratory, the Office of Naval Research, and other organizations.

14. My teaching responsibilities have included courses in communication systems and networks, signals and systems, software-defined radio, and digital signal processing.

15. I am a named inventor on more than thirty U.S. patents, most of which relate to the hardware or software aspects of communication systems. In 2019, I was inducted into the Purdue Inventors Hall of Fame.

16. I have also authored and co-authored more than one hundred peer-reviewed articles. I also authored "Wireless Communication Standards: A Study of

IEEE 802.11, 802.15, and 802.16," published by IEEE Press. A list of my publications and patents appears in my *curriculum vitae* Ex. 1036.

17. A detailed record of my professional qualifications is set forth in the attached Ex. 1036, which is my *curriculum vitae*. My *curriculum vitae* also lists the depositions, hearings, and trial at which I have testified.

18. I graduated from the Technical University of Sofia, Bulgaria in 1988 with a Diploma of Engineering in the field of Electrical Engineering. I graduated from Tokyo Institute of Technology in Tokyo, Japan in 1995 with a Doctor of Philosophy (Ph.D.) degree in Electrical Engineering.

19. I have contributed to the development of several major standards for communication systems and numerous amendments, including Bluetooth, DSL, Wi-Fi, cellular, and standards for tactical radio systems and electronic warfare. I have participated in many meetings of standards committees and prepared, submitted, and presented documents relating to technical matters considered by these committees. I have also drafted liaison letters among different standards committees. I have chaired some committee meetings and served in other leadership roles. For example, I have been a Voting Member of the IEEE 802.11 Working Group and served as Chairman of the IEEE Standards in Education Committee. I received an award from IEEE Standards Association in 2012.

20. My additional involvement with IEEE includes being elected to serve on the Board of Governors of the IEEE Standards Association in 2020 for one term beginning January 2021. The Board of Governors provides overall leadership of the IEEE Standards Association.

21. Also, I am the Series Editor for Wireless and Radio Communications for the IEEE Communications Standards Magazine (which is the premier journal in the field of communication standards) and have held that position since 2017.

IV. MATERIALS CONSIDERED

22. In formulating my opinions, I have relied upon my training, knowledge, and experience that are relevant to the ’512 patent. I have also reviewed and am familiar with the following documents and materials in addition to any other documents cited in this declaration:

Exhibit No.	***Description***
1001	U.S. Patent No. 10,965,512 to Li et al. (“’512 patent”)
1002	’512 Patent Prosecution History
1003	Declaration of Dr. Paul Min Submitted In IPR2022-01539
1004	International Patent Publication No. WO2004/049618 to Kim et al. (“Kim”)
1005	U.S. Patent No. 7,120,395 to Tong et al. (“Tong”)
1006	U.S. Patent Application Pub. No. 2004/0179627 to Ketchum et al. (“Ketchum”)

Exhibit No.	***Description***
1007	U.S. Patent Application Pub. No. 2002/0163879 to Li et al. ("Li")
1008	U.S. Patent No. 7,248,559 to Ma et al. ("Ma '559")
1009	Tufvesson, et al., *Pilot Assisted Channel Estimation For OFDM in Mobile Cellular Systems*, IEEE 47th Vehicular Technology Conference (1997)
1010	U.S. Patent No. 7,826,471 to Wilson et al. ("Wilson")
1011	U.S. Patent No. 7,664,533 to Logothetis et al. ("Logothetis")
1012	U.S. Patent No. 7,054,664 to Nagaraj ("Nagaraj")
1013	International Patent Application No. WO 2004/056022 to Lee et al. ("Lee")
1014	U.S. Patent No. 7,551,546 to Ma ("Ma '546")
1015	Anderson, Fixed Broadband Wireless System Design, Wiley (2003) (excerpts)
1016	U.S. Patent No. 7,852,746 to Jalali ("Jalali").
1017	U.S. Patent Application Pub. No. 2004/0131007 to Smee et al. ("Smee")
1018	U.S. Patent No. 7,650,152 to Li et al. ("Li '152").
1019	U.S. Patent Application Pub. No. 2004/0190598 to Seki et al. ("Seki").
1020	Li, "*A Novel Broadband Wireless OFDMA Scheme for Downlink in Cellular Communications*," Samsung Advanced Institute of Technology (IEEE) (2003) ("Li-Samsung")
1021	Hara et al., "*Multicarrier Techniques for 4G Mobile Communications*," Artech House (2003) (excerpts) ("Hara")
1022	U.S. Patent Application Pub. No. 2004/0228270 to Chen et al. ("Chen")
1023	Van Nee et al., "OFDM for Wireless Multimedia Communications," Artech House (2000) ("Van Nee") (excerpts)
1024	Bahai et al., "*Multi-Carrier Communications Theory and Applications of OFDM*," Springer Science (2004) (excerpts) ("Bahai")

Exhibit No.	***Description***
1025	U.S. Patent No. 7,039,001 to Krishnan et al. (Krishnan")
1026	U.S. Patent No. 6,992,621 to Casas et al. ("Casas")
1027	U.S. Patent No. 5,596,329 to Searle et al. ("Searle")
1028	U.S. Patent Application Pub. No. 2005/0075125 to Bada et al. ("Bada").
1029	*Curriculum Vitae* of Dr. Paul Min
1030	U.S. Provisional Patent Application No. 60/421,309 to Walton et al. ("'309 Provisional")
1031	U.S. Patent No. 7,012,882 to Wang et al. ("Wang")
1036	Curriculum Vitae of Dr. Todor Cooklev

To the best of my knowledge, the above-mentioned documents and materials are true and accurate copies of what they purport to be. An expert in the field would reasonably rely on them to formulate opinions such as those set forth in this declaration.

V. LEGAL UNDERSTANDING

23. I have also relied upon various legal principles (as explained to me by Ford's counsel) in formulating my opinions. My understanding of these principles is summarized below.

A. My Understanding of Claim Construction

24. I understand that during an *inter partes* review proceeding, claims are to be construed in light of the specification as would be read by a person of

ordinary skill in the relevant art at the time the application was filed. I understand that claim terms are given their ordinary and customary meaning as would be understood by a person of ordinary skill in the relevant art in the context of the entire disclosure. A claim term, however, will not receive its ordinary meaning if the patentee acted as his own lexicographer and clearly set forth a definition of the claim term in the specification. In this case, the claim term will receive the definition set forth in the patent.

B. My Understanding of Obviousness

25. I understand that a patent claim is invalid if the claimed invention would have been obvious to a POSA at the time the application was filed. This means that even if all of the requirements of the claim cannot be found in a single prior art reference that would anticipate the claim, the claim can still be invalid.

26. To obtain a patent, a claimed invention must have, as of the priority date, been nonobvious in view of the prior art in the field. I understand that an invention is obvious when the differences between the subject matter sought to be patented and the prior art are such that the subject matter as a whole would have been obvious at the time the invention was made to a POSA.

27. I understand that to prove that prior art or a combination of prior art renders a patent obvious, it is necessary to:

28. (1) identify the particular references that, singly or in combination, render the patent obvious;

29. (2) specifically identify which elements of the patent claim appear in each of the asserted references; and

30. (3) explain how the prior art references could have been combined in order to create the inventions claimed in the asserted claim.

31. I also understand that prior art references can be combined under several different circumstances. For example, it is my understanding that one such circumstance is when a proposed combination of prior art references results in a system that represents a predictable variation, which is achieved using prior art elements according to their established functions.

32. I also understand that when considering the obviousness of a patent claim, one should consider whether a teaching, suggestion, or motivation to combine the references exists so as to avoid impermissibly applying hindsight when considering the prior art. I understand this test should not be rigidly applied, but that the test can be important to avoid such hindsight.

33. I understand that certain objective indicia can be important evidence as to whether a patent is obvious or nonobvious. Such indicia include:
(1) commercial success of products covered by the patent claims; (2) a long-felt need for the invention; (3) failed attempts by others to make the invention;

(4) copying of the invention by others in the field; (5) unexpected results achieved by the invention as compared to the closest prior art; (6) praise of the invention by the infringer or others in the field; (7) the taking of licenses under the patent by others; (8) expressions of surprise by experts and those skilled in the art at the making of the invention; and (9) the patentee proceeded contrary to the accepted wisdom of the prior art.

34. At this point, I am not aware of any secondary indicia of non-obviousness. But, I reserve the right to review and opine on any evidence of objective indicia of nonobvious that may be presented during this proceeding.

35. I also understand that "obviousness" is a legal conclusion based on the underlying factual issues of the scope and content of the prior art, the differences between the claimed invention and the prior art, the level of ordinary skill in the prior art, and any objective indicia of non-obviousness.

36. For that reason, I am not rendering a legal opinion on the ultimate legal question of obviousness. Rather, my testimony addresses the underlying facts and factual analysis that would support a legal conclusion of obviousness or non-obviousness, and when I use the term obvious, I am referring to the perspective of one of ordinary skill at the time of invention.

C. A Person of Ordinary Skill in the Art

37. I understand that a person of ordinary skill in the relevant art ("POSA") is presumed to be aware of all pertinent art, thinks along conventional wisdom in the art, and is a person of ordinary creativity—not an automaton.

38. I have been asked to consider the level of ordinary skill in the field that someone would have had at the time the claimed invention was made. In deciding the level of ordinary skill, I considered the following:

- the levels of education and experience of persons working in the field;
- the types of problems encountered in the field; and
- the sophistication of the technology.

39. My opinion below explains how a POSA would have understood the technology described in the references I have identified herein around the January 29, 2004 timeframe. I have been advised that the alleged earliest possible effective filing date for the '512 Patent is January 29, 2004.

40. Regardless of whether I use "I" or a "POSA" during my technical analysis below, all of my statements and opinions are always to be understood to be based on how a POSA would have understood or read a document at the time of the alleged invention.

VI. OVERVIEW OF THE '512 PATENT

41. The '512 patent is directed to a "multi-carrier cellular wireless network [that] employs base stations [] that transmit two different groups of pilot subcarriers." EX1001, Abstract. The two groups of pilots are "cell-specific pilot subcarriers, which are used by a receiver to extract information unique to each individual cell," and "common pilots subcarriers, which are designed to possess a set of characteristics common to all the base stations [] of the system. *Id*.

42. Pilot signals are signals "whose phases and amplitudes are predetermined and made known to all receivers" in the system. *Id*., 4:8-11. Mobile stations can use the pilots "for assisting system functions such as estimation of system parameters." *Id*. The '512 patent alleges that prior systems failed to adequately mitigate "mutual interference between the pilot subcarriers from adjacent cells." *Id.,* 1:62-2:2. Specifically, the '512 patent alleges that prior techniques for mitigating such interference did not "provide[] for a careful and systematic consideration of the unique requirements of the pilot subcarriers." *Id*.

43. To address such considerations, the '512 patent implements the "cell-specific pilot subcarriers" and "common pilot subcarriers" that are transmitted on downlink signals to mobile stations in a multi-carrier wireless communication system. *Id*., 3:4-36. For instance, as shown in Figure 5, base stations within the system insert cell-specific pilot signals, common pilot signals,

and data signals at appropriate subcarrier frequencies. The ’512 patent explains that the downlink signal can be implemented using, for instance, “multi-carrier code division multiple access (MC-CDMA) [or] orthogonal frequency division multiple access (OFDMA).” *Id*., 3:55-59.

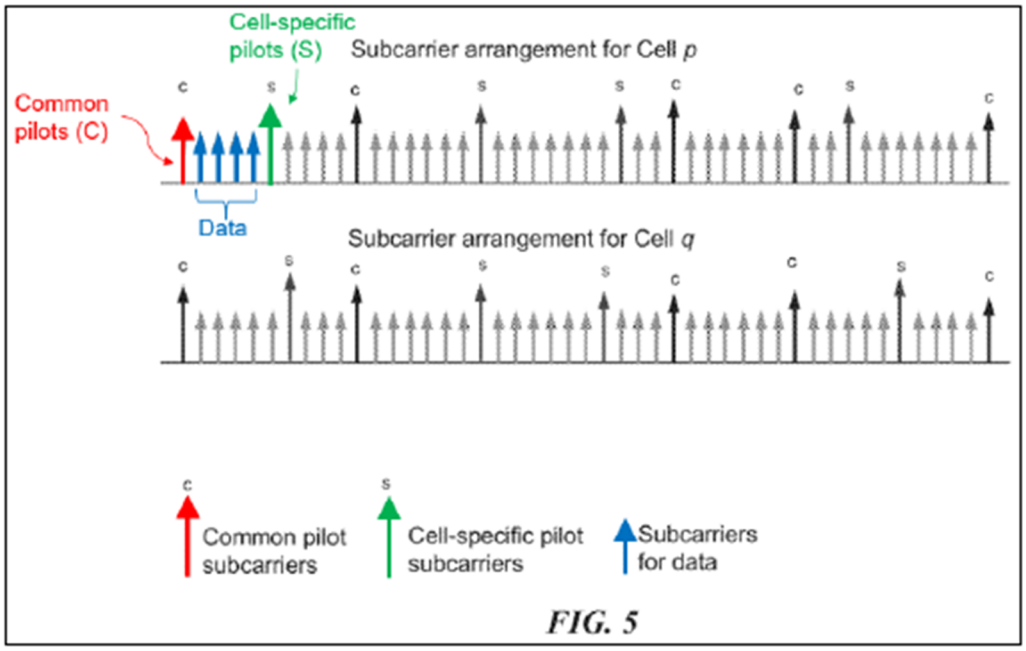

EX1001, FIG. 5 (annotated).

44. As explained, the cell-specific pilot subcarriers are “used by the receiver 104 to extract information unique to each individual cell.” *Id*., 3:17-19. The “cell-specific pilot subcarriers can be used in channel estimation where it is necessary for a particular receiver to be able to differentiate the pilot subcarriers that are intended for its use from those of other cells.” *Id*., 3:19-23.

45. The “common pilot subcarriers” are “designed to possess a set of characteristics common to all base stations of the system.” *Id*., 3:25-27. Mobile

stations in the system use the common pilot subcarriers "for a number of functionalities, such as frequency offset estimation and timing estimation." *Id*., 5:65-67. Mobile stations also use the common pilot subcarriers to recover "data information common to all cells in the network" that is carried by "common data subcarriers," such as shown in Figure 13. *Id*., 8:65-9:5. Specifically, to recover this data, mobile stations perform channel estimation by "determin[ing] the composite channel coefficient based on the common pilot subcarrier." *Id*. The mobile stations then apply the composite channel coefficient "to the data subcarrier to compensate for the channel effect" between the base station and mobile station. *Id*.

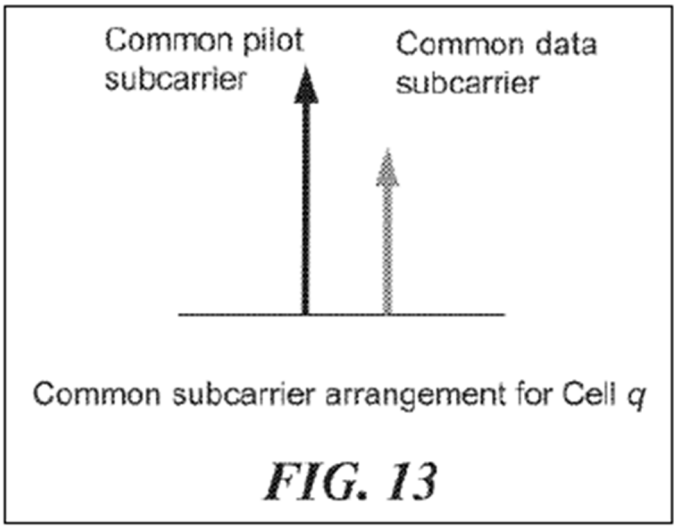

EX1001, FIG. 13 (excerpt).

VII. TECHNOLOGY OVERVIEW

46. Before the priority date of the '512 patent, all elements of the claimed technology at issue had been developed and were well-known. For instance, it was

well-known to implement cellular wireless communication systems using orthogonal frequency-division multiplexing (OFDM) and orthogonal frequency division multiple access (OFDMA). It was also well-known to use pilot signals to estimate wireless channels for data recovery in such systems. Indeed it was also well-known to use two or more different pilot types in such systems. And finally, it was also well-known to transmit such pilot signals using beamforming techniques.

A. Cellular systems implemented OFDM and OFDMA for providing downlink signals

47. OFDM and its "logical extension," OFDMA that allows sending and receiving data to/from multiple devices, were well-known in the art. EX1015, Anderson, 326; *see also* EX1014, Ma '546, 10:1-19. It was also well-known to use these techniques in cellular systems for transmitting uplink and downlink signals. *E.g.,* EX1020, Kim, 1907 (disclosing "cellular OFDMA systems"); EX1013, Lee, Abstract (disclosing an "OFDMA [] based cellular system"); EX1014, 10:1-19, 12:41-43, 24:61-66 (disclosing a cellular "OFDMA system").

48. "The basic principle of OFDM [] is to split a high-rate data stream into a number of lower rate streams that are transmitted simultaneously over a number of subcarriers." EX1021, Hara, 43. Transmitting the data simultaneously on multiple subcarriers "allows the symbols containing the data to be of longer duration, which reduces the effects of multi-path fading." EX1008, Ma '559, 1:26-29; *see also* EX1015, 241 ("The main advantage of OFDM is that the symbol

duration can be much longer so that the susceptibility to errors from intersymbol interference (ISI) due to multipath time dispersion is greatly reduced.”).

49. In OFDM, by carefully separating the subcarriers, the use of bandwidth by a subcarrier can overlap with other subcarriers, without interfering with data transmission over these subcarriers. EX1023, Van Nee, 21. This provides a more efficient use of the available frequency spectrum compared to data systems that implement parallel, non-overlapping frequency subcarriers. *Id*. This concept is shown in the below figure. As shown, the “conventional multicarrier technique” (a) uses more of the frequency spectrum than the OFDM technique (b) because the subcarriers in the conventional technique are spaced apart (much more than the OFDMA technique to provide nonoverlapping subcarriers).

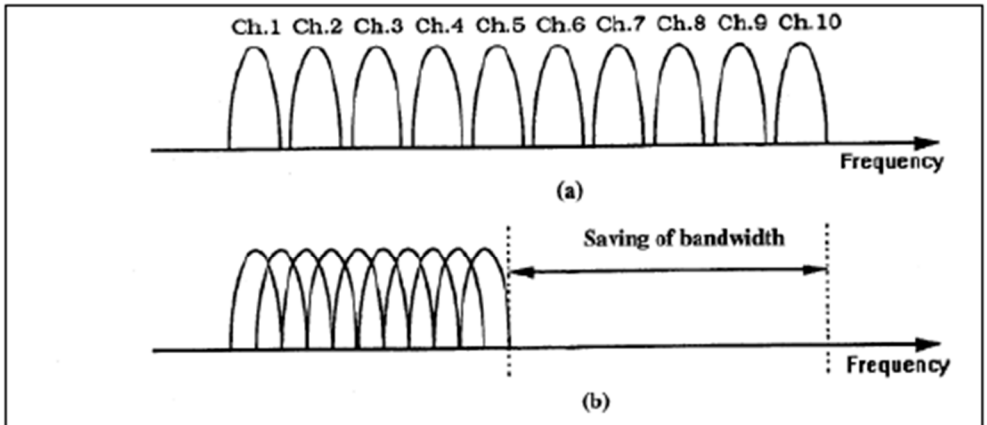

Figure 1.10 Concept of OFDM signal: (a) Conventional multicarrier technique, and (b) orthogonal multicarrier modulation technique.

EX1023, FIG. 1.10.

50. To realize overlapping subcarriers, OFDM systems need to reduce or eliminate “crosstalk,” or interference, between subcarriers. EX1023, 21. OFDM

achieves this by spacing the subcarriers in such a way that the use of bandwidth by one subcarrier is null at the center frequency of other subcarrier frequencies. This concept is known as orthogonality. EX1023, 22; EX1022, Chen, ¶5. This is shown in the figure below, which depicts an example OFDM spectrum, wherein the subcarriers have an orthogonal frequency spacing of $1/T_U$. Such orthogonality "allow[s] data modulated to each sub-carrier to be independently recovered at a receiver." EX1014, 10:15-19. Further, "[t]he orthogonality of the frequencies allows the sub-carriers to be tightly spaced, while minimizing inter-carrier interference." EX1008, 1:28-31.

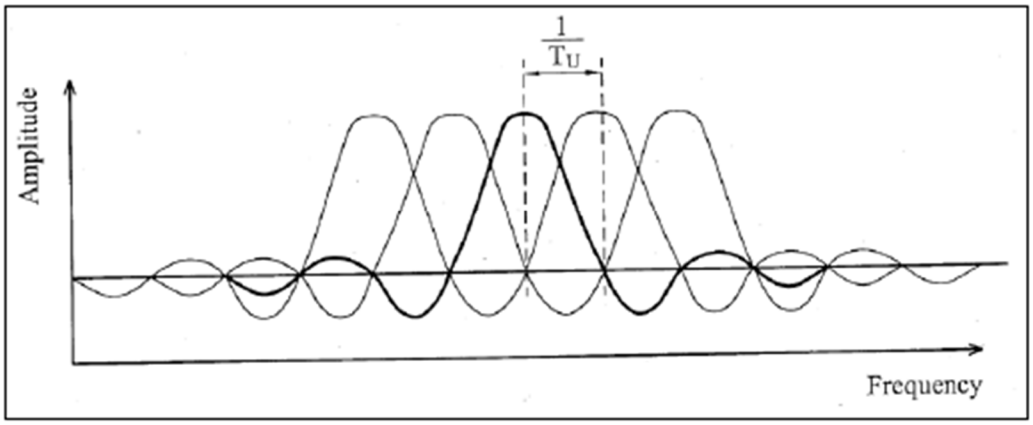

EX1022, FIG. 1.

51. In OFDM-based cellular systems, a base station transmitter encodes, interleaves, and modulates data to form data symbols to be transmitted. EX1008, 1:31-35; *see also* EX1007, Li, ¶28; EX1009, Tufvesson, 1639. The transmitter also adds "overhead information," including "pilot symbols." *Id*. The data and the overhead information are organized into OFDM symbols. *Id*. To do so, the base

station inserts the data and overhead information on respective subcarriers, such as those shown above. EX1008, 1:23-43; EX1024, Bahai, 119 ("inserting pilot tones into each OFDM symbol"). The base station then transmits the OFDM symbol to the receiver along a communication channel. EX1008, 1:23-43.

52. The base station transmits such OFDM symbols over many consecutive time slots. OFDM symbols are typically represented in time-frequency grids, as shown below. *E.g.,* EX1031, Wang, 1:27-53; EX1024, 45; EX1009, FIG. 2; EX1004, Kim, FIG. 1; EX1007, FIG. 2; EX1008, FIG. 5.

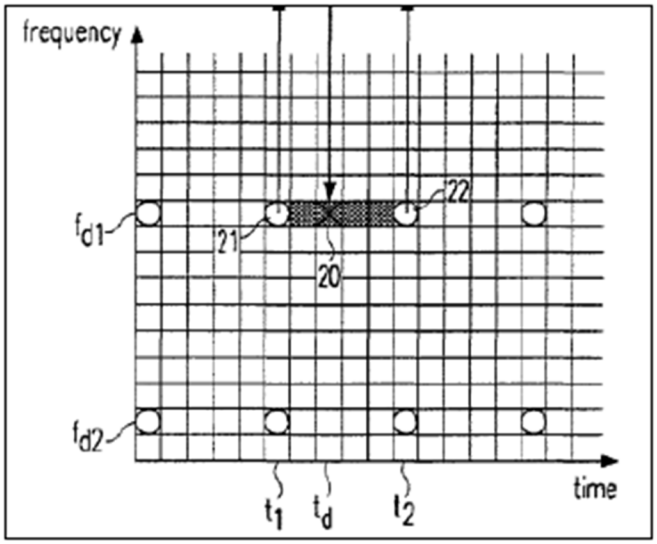

EX1030, FIG. 2 (excerpt).

53. As represented in the time-frequency grid, and consistent with my discussion above, in OFDM, the "frequency domain is subdivided into a plurality of frequency subcarriers and the time domain is subdivided into a plurality of timeslots." EX1031, 1:41-44. That is, each cell in the time-frequency grid

represents a subcarrier in the frequency domain (y-axis) and a timeslot in the time domain (x-axis). *Id*.; *see also* EX1014, 10:1-19. "Each frequency subcarrier and each timeslot define a transmission channel for the transmission of a data symbol or a pilot symbol." EX1031, 1:44-46. The base station transmits the OFDM symbols including each subcarrier in each time slot.

54. OFDMA is a "variation" or "logical extension" of OFDM. EX1023, 213; EX1015, 307. In OFDMA, "multiple access is realized by providing each user with a fraction of the available number of subcarriers." EX1023, 213; EX1015, 307. The set of subcarriers for each user can be fixed or variable (e.g., via frequency hopping). EX1023, 213-214. An example of a fixed frequency allocation is provided in the figure below. Specifically, this figure depicts an OFDMA time-frequency grid "where seven users *a* to *g* each use a certain fraction… of the available subcarriers." EX1023, 213.

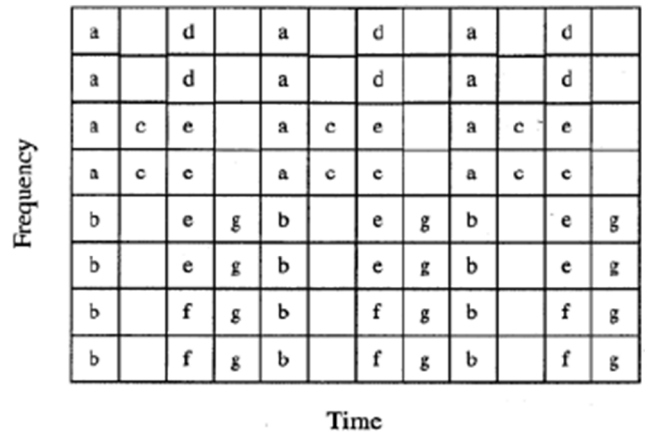

a		d		a		d		a		d	
a		d		a		d		a		d	
a	c	e		a	c	e		a	c	e	
a	c	c		a	c	c		a	c	c	
b		e	g	b		e	g	b		e	g
b		e	g	b		e	g	b		e	g
b		f	g	b		f	g	b		f	g
b		f	g	b		f	g	b		f	g

Figure 9.1 Example of the time-frequency grid with seven OFDMA users, a to g, which all have a fixed set of subcarriers every four timeslots.

EX1023, FIG. 9.1.

55. As can be seen, the time-frequency grid shown here is similar to the OFDM time-frequency grid I discussed above. This is because OFDMA utilizes OFDM modulation techniques for transmitting data. EX1014, 10:1-19; EX1015, 307; EX1016, Jalali, 1:16-34. OFDMA extends OFDM for multiple-access by allocating particular subcarriers and timeslots (i.e., channels) for different receivers/users. EX1014, 10:1-19; EX1015, 307; EX1016, 1:16-34.

B. OFDM/OFDMA cellular systems implemented pilot signals for channel estimation and data recovery

56. It was known for OFDM/OFDMA cellular systems to use pilot signals for channel estimation and data recovery at the receiver. Indeed, the Background section of the ’512 patent admits that such techniques were known. *See* EX1001, 1:36-2:2 (“In multi-carrier wireless communications, many important system functions such as frequency synchronization and channel estimation… are

facilitated by using the network information provided by a portion of total subcarriers such as pilot subcarriers…”).

57. In wireless systems, the communication channel (e.g., air or space) over which data is transmitted disturbs the transmitted data by “introducing amplitude and phase shifts” in the signal. EX1024, 15, 117. Such “variations in phase and amplitude resulting from propagation along the channel are referred to as the channel response.” EX1008, 2:1-3. “In order for the receiver to acquire the original [data], it needs to take into account these unknown changes” of the channel response. EX1024, 118. Thus, “[a]n accurate estimate of the response of the wireless channel between the transmitter and the receiver is normally needed in order to effectively transmit data on the available [subcarriers].” EX1025, Krishnan, 1:52-55. This enables the receiver to accurately recover the transmitted data by compensating for the channel response.

58. “Channel estimation is typically performed by sending a pilot from the transmitter and measuring the pilot at the receiver.” *Id.,* 1:55-57. “Since the pilot is made up of symbols that are known *a priori* by the receiver, the channel response can be estimated as the ratio of the received pilot symbol over the transmitted pilot symbol for each [subcarrier] used for pilot transmission.” *Id.*, 1:57-61. For instance, based on the known pilot values, the receiver can estimate the channel response at the locations (time and frequency) at which the pilot

symbols were transmitted. EX1024, 118. The receiver can then estimate "the entire channel," including locations at which unknown data is transmitted, using "interpolation techniques." *Id*.

59. OFDM systems may implement one or more known pilot patterns for channel estimation. EX1008, 3:4-8; EX1009, 1639. Block-type pilot patterns, Comb-type pilot patterns, and scattered pilot patterns are a few examples of known patterns. EX1024, 123. The figure below depicts example time-frequency grids of OFDM signals implementing such pilot patterns, where the black cells are pilot symbols and the white cells are data symbols.

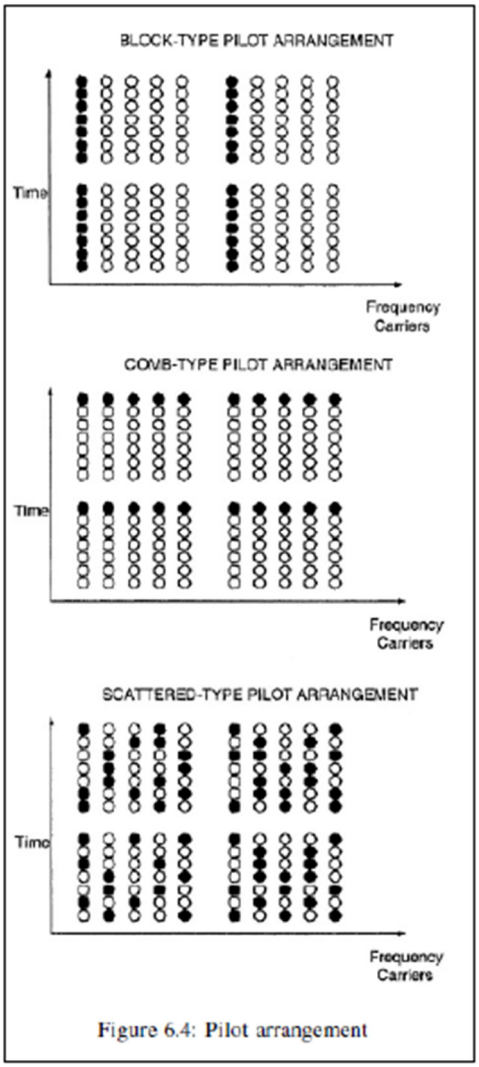

EX1024, FIG. 6.4.

60. Such channel estimation was commonly performed in OFDM wireless communication systems to recover transmitted data. *E.g.,* EX1025, 1:52-61; EX1009, 1639 (disclosing "pilot assisted channel estimation techniques for OFDM in mobile cellular systems"); EX1008, Abstract; EX1018, Li, 5:44-47. Indeed, "channel estimation in OFDM is *usually* coherent detection which is based on the use of pilot subcarriers in given positions of the frequency-time grid." EX1024, 45

(emphasis added); *see also* EX1006, Ketchum, ¶¶7-8 ("*In many wireless communication systems*, a pilot is transmitted by the transmitter to assist the receiver in performing… channel estimation, timing and frequency acquisition, data demodulation, and so on") (emphasis added). The '512 patent admits that such techniques were well-known and commonly implemented. EX1001, 1:36-43 ("In multi-carrier wireless communications, many important system functions such as frequency synchronization and *channel estimation*, depicted in FIG. 1, are facilitated by using the network information provided by a portion of total subcarriers such as *pilot subcarriers*.").

C. OFDM/OFDMA systems implemented multiple types of pilot symbols

61. It was also known for OFDM/OFDMA systems to implement multiple pilot types of pilots that could be used, for instance, for different functions. As described in more detail below, Ketchum discloses an OFDM multiple-access system that implements "various types of pilot," including a beacon pilot, a MIMO pilot, a steered reference or steered pilot, and a carrier pilot." EX1006, Abstract. Further, Kim discloses cellular downlink signals that include two types of pilot signals—a "[pilot] pattern in common for each cell," and a different pilot pattern that is "different for each cell." EX1004, 6:23-7:11, 24:20-25:5.

D. Cellular systems routinely implemented beamforming for transmitting downlink signals

62. It was also well-known to communicate OFDM cellular downlink signals using beamforming techniques. Beamforming is a communication technique in which electromagnetic waves transmitted by multiple antennas are "focused in a desired direction." EX1026, Casas, 1:20-24. In such instance, "the pattern formed by the electromagnetic wave is termed a 'beam' or 'beam pattern.'" *Id*. Beamforming is implemented using an array of two or more antennas, and enabling the energy of the antenna transmissions "to combine in the channel in a constructive fashion to provide additional gain." EX1005, Tong, 8:61-66; *see also* EX1011, Logothetis, 1:9-15. Beamforming was commonly implemented in cellular systems to transmit downlink signals, including pilot signals. *Id.*, 2:1-19; EX1012, Nagaraj, 2:19-39; EX1010, Wilson, Abstract.

63. Beamforming provides a number of well-known benefits in wireless systems. For instance, beamforming "enhance[s] reception of signals from different angles of arrival," and "enhance[s] the quality of transmission of signals to different users." EX1012, 1:30-33. Specifically, because beamforming constructively combines antenna transmissions in a desired direction, beamforming provides "additional gain" of the transmitted signal, which results in an increased signal-to-noise ratio at the receiver. EX1005, 8:61-9:6. Other benefits include "efficient-utilization of spectral resources by exploiting the spatial (angular)

separation of users, cost efficiency, increased range or capacity, and easy integration." EX1011, 1:25-32.

VIII. PROSECUTION HISTORY SUMMARY

64. The application that issued as the '512 patent received a first action allowance at the U.S. Patent and Trademark Office ("USPTO"). EX1002, '512 Patent Prosecution File History, 162-171. In issuing the Notice of Allowance, the Examiner stated that the "closest prior art of record" included U.S. Patent No. 7,650,152 to Li *et al*. (EX1018, Li '152) and U.S. Patent Pub. No. 2004/0190598 to Seki *et al*. (EX1019, Seki). *Id*., 167-168.

IX. LEVEL OF ORDINARY SKILL IN THE ART

65. A person of ordinary skill in the art ("POSA") would have a bachelor's degree in electrical engineering, computer engineering, computer science, or an equivalent field, or an advanced degree in those fields, as well as least 3-5 years of academic or industry experience in mobile wireless communications, or comparable industry experience. I am well qualified to determine the level of ordinary skill in the art. I am very familiar with the technology of the '512 patent during the January 2004 timeframe and would more than qualify as a POSA for the '512 patent.

X. CLAIM CONSTRUCTION

66. I have been instructed that the challenged claims of the ’512 patent are to be given their ordinary and customary meaning as understood by one of ordinary skill in the art at the time of the invention in light of the specification and the prosecution history pertaining to the patent. Based on my review of the challenged claims, it is my opinion that none of the claim terms require explicit constructions. Accordingly, all claim terms should receive their plain and ordinary meaning, in the context of the ’512 patent specification.

XI. OVERVIEW OF THE PRIOR-ART

A. Kim

67. Kim describes an “OFDMA-based cellular system” including base stations that communicate with mobile terminals. EX1004, Abstract. Kim explains that “a terminal is required to read signals of a base station and synchronize its time and frequency with the terminal for initial synchronization, and search cells in a cellular system.” *Id.*, 1:23-2:3. Accordingly, Kim’s base station provides OFDM “downlink signals” communicated from the base station to the mobile terminals. *Id.*, 1:14-16.

68. Figure 1 depicts an example downlink signal. *Id*. As shown, the downlink signal includes a “common slot 10” and a plurality of “traffic slots” 20. Each of the slots 10, 20 is represented by a time-frequency grid that divides the

frequency domain (y-axis) into subcarriers and divides the time domain (x-axis) into time slots. *Id.*, 11:15-12:10. Thus, each cell in the slots 10, 20 represents a subcarrier in the frequency domain (y-axis) and a timeslot in the time domain (x-axis). *See* §VII.A *supra*.

69. The traffic slots 20 include pilot symbols 200 inserted "per group of Nf subcarriers with respect to the frequency axis and per group of Nt symbols with respect to the time axis." *Id.*, 12:4-10. The traffic slots also include "traffic data" (white cells in the traffic slots 20 in FIG. 1). *Id.*, 46:2-16. Each pilot symbol 200 and traffic data symbol is inserted on a particular subcarrier (y-axis) for a particular timeslot (x-axis).

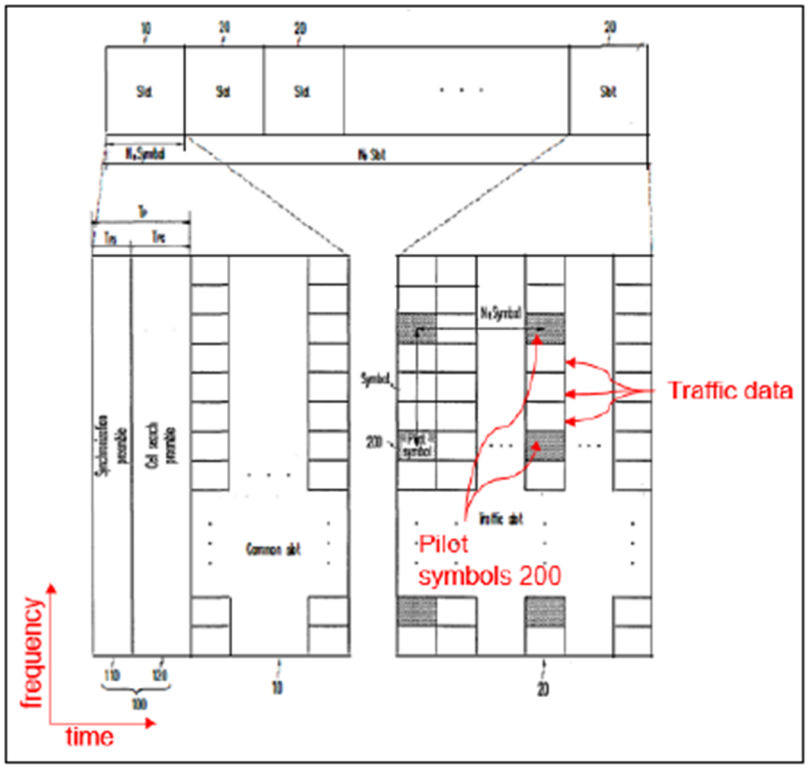

EX1004, FIG. 1 (annotated).

70. Kim explains that its downlink signal configuring device 2100 inserts pilot symbols into the downlink signal "for each group of N_f subcarriers at the s_1^{th} symbol 910, and the pilot symbols respectively have a pattern $P_{s1,c}$ (*i*) where c is a cell number, i is the ith pilot subcarrier in the s_1^{th} OFDM symbol." *Id.*, 24:2-11. This is shown in Figure 9. As shown, for OFDM symbol 910, the pilot pattern (purple) is inserted on subcarriers with an interval of N_f. *Id*. This pilot pattern is specific to the particular cell associated with the base station. *Id.* ("specific pilot pattern for each cell").

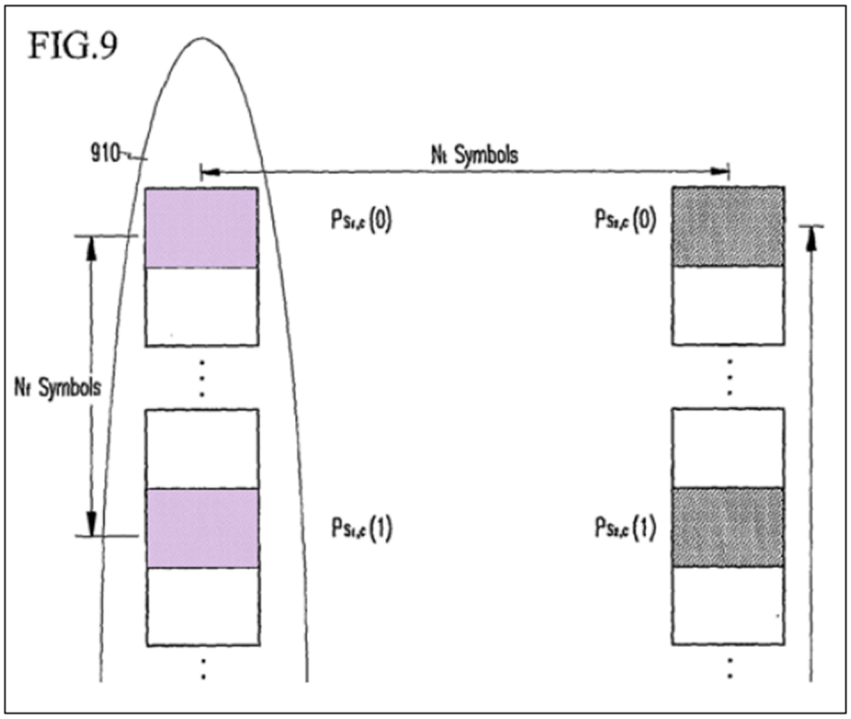

EX1004, FIG. 9 (excerpt, annotated).

71. In some instances, the pattern $P_{s1,c}$ (*i*) can be a "combination of Q [pilot] patterns," including at least one pilot pattern specific to the cell, such as

shown in Figure 9, and at least one pilot pattern "used in common by all the cells." *Id.*, 24:20-25:5. In such instances, the pilot patterns are represented as $P_{q,s,c}$ (i), where q is the particular pilot pattern number from 0 to Q-1. *Id.*, 24:2-11, 24:20-25:5. Specifically, "Q_1 patterns from among the Q patterns are used in common by all the cells, and residual Q_2 (= Q-Q_1) patterns are defined to be different for the respective cells." *Id.*, 24:20-25:5. Each Q_2 pattern is "a specific pattern for [the] cell." *Id.*, 26:3-7.

72. Figure 10, reproduced and annotated below, shows three example pilot patterns, represented as $P_{q,s,c}$ (i). The purple symbols represent pilot pattern 0, the blue symbols represent pilot pattern 1, and the green symbols represent pilot pattern Q-1 (the pilot pattern number q for each of these patterns is underlined in red). As explained, Kim designates a first subset (Q_1) of the Q pilot patterns as being "used in common by all the cells," and also designates a second subset ("residual Q_2 (=Q−Q_1) patterns") as being "defined to be different for the respective cells" (i.e., "a specific pattern for each cell" or cell-specific). *Id.*, 24:20-25:5, 26:3-7.

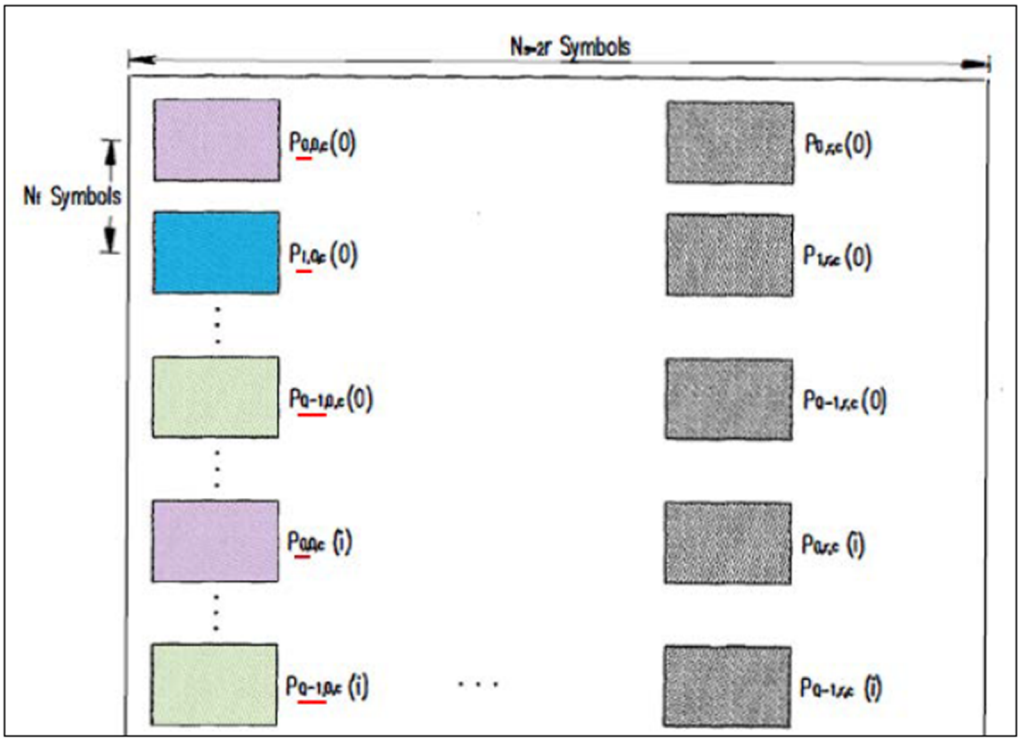

EX1004, FIG. 10 (excerpt, annotated).

73. A POSA would have understood that in such OFDM symbol, at least one of the pilot patterns (e.g., pattern 0, highlighted purple) represents one of the Q_1 common pilot patterns and at least one of the patterns (e.g., patterns 1 and Q-1, highlighted blue and green respectively) represent one of the Q_2 cell-specific pilot patterns that are specific to the particular cell associated with the base station. Further, I note that although Figure 10 shows three different pilot patterns (0, 1, Q-1), Kim discloses an example wherein an OFDM symbol includes only two pilot patterns, one that is common to each cell and one that is specific to a particular cell. *Id.*, 6:23-7:10, 58:1-11.

74. Kim's base station provides the downlink signal on "each transmit antenna." *Id.*, 54:8-10. Specifically, Kim discloses that "the pilot pattern shown in FIG. 10 is used in common for all the antennas" and transmitted on all the antennas. *Id.*, 31:10-16; 58:12-14.

75. A mobile terminal receives the downlink signal, and uses the common pattern pilots for "slot synchronization," and uses the cell-specific pattern pilots "to search the cells." *Id*. For instance, upon receiving the OFDM downlink signal, the terminal estimates a "symbol synchronization." *Id.*, 25:13-20. "The estimated symbol synchronization and a pattern of a pilot in common for each cell are used to estimate slot synchronization." *Id.*, 25:20-22. Specifically, Kim's terminal "selects a common pilot receive signal" from the received OFDM symbol, and uses the common pilot to estimate slot synchronization (*e.g.,* step 1120 in Figure 11B, below). *Id.*, 25:20-26:1, 27:10-28:13. Further, one or both of the "cell search preamble 120 and a specific pattern for each cell of the pilot is/are used to search the cells" to select the appropriate cell (*e.g.,* step 1150 in Figure 11B, below). *Id.*, 26:3-7.

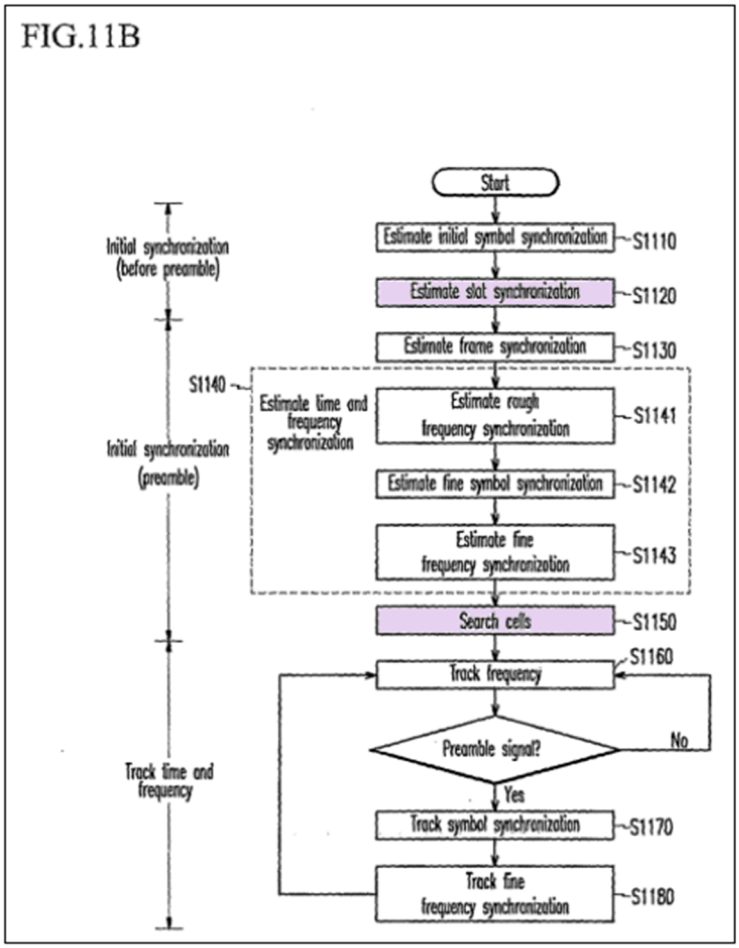

EX1004, FIG. 11B (annotated).

B. Ketchum

76. Ketchum describes "pilots suitable for use in MIMO systems and capable of supporting various functions." EX1006, Abstract. Ketchum explains that, "[i]n many wireless communication systems, a pilot is transmitted by the transmitter to assist the receiver in performing a number of functions." *Id.*, ¶8. "The pilot may be used by the receiver for channel estimation, timing and frequency acquisition, data demodulation, and so on." *Id*. Ketchum also explains that in "multiple-input multiple-output (MIMO) communication systems, the pilot

structure needs to address the additional dimensionalities created by the multiple transmit and multiple receive antennas." *Id.*, ¶9. Ketchum also explains that "it is desirable to minimize pilot transmission to the extent possible." *Id*.

77. To address these considerations, Ketchum discloses pilots of "different types" that "support various functions that may be needed for proper system operation, such as timing and frequency acquisition, channel estimation, calibration, and so on." *Id.,* ¶11. "The various types of pilot may include: a beacon pilot, a MIMO pilot, a steered reference or steered pilot, and a carrier pilot." *Id.*, ¶12. Ketchum summarizes these pilot types in Table 1, reproduced below:

TABLE 1

Pilot Types

Pilot Type	Description
Beacon Pilot	A pilot transmitted from all transmit antennas and used for timing and frequency acquisition.
MIMO Pilot	A pilot transmitted from all transmit antennas with different orthogonal codes and used for channel estimation.
Steered Reference or Steered Pilot	A pilot transmitted on specific eigenmodes of a MIMO channel for a specific user terminal and used for channel estimation and possibly rate control.
Carrier Pilot	A pilot used for phase tracking of a carrier signal.

EX1006, Table 1.

78. Ketchum discloses access points, or base stations, that provide the various pilots along with data in orthogonal frequency division multiplexing (OFDM) symbols. *Id.*, ¶33. Ketchum provides the pilots on respective subcarriers

associated with frequency subbands, in accordance with OFDM techniques. *Id.*, ¶35. As an example, Ketchum discloses that its beacon pilots can be provided on "a set of 12 BPSK modulation symbols for 12 specific subbands, which is referred to as a 'B' OFDM symbol." *Id.*, ¶39. Further, the steered reference pilot can be sent on a set of "52 QPSK modulation symbols", which is referred to as the "P OFDM symbol." *Id.*, ¶47. Example B and P OFDM symbols (labeled *b(k)* and *p(k)*), respectively) are shown in Table 2, reproduced in part below.[1]

[1] Although Table 2 states that the P OFDM symbol is used to send the MIMO pilot, Ketchum discloses that "the set of pilot symbols for the steered reference is the same P OFDM symbol used for the MIMO pilot." EX1006, ¶73.

TABLE 2

Subband Index	Pilot Symbols: Beacon Pilot b(k)	Pilot Symbols: MIMO Pilot p(k)
...	0	0
−26	0	−1 − j
−25	0	−1 + j
−24	1 + j	−1 + j
−23	0	−1 + j
−22	0	1 − j
−21	0	1 − j
−20	−1 − j	1 + j
−19	0	−1 − j
−18	0	−1 + j
	...	

EX1006, Table 2.

79. User terminals receive the pilots, and implement them for various system functions, as described above, and to "recover the transmitted data." *Id.*, ¶¶7-8. Specifically, the terminal uses the beacon pilots to determine "system timing and frequency acquisition." *Id.*, ¶41. For instance, "the beacon pilot may be used to lock the frequency of the user terminal to the clock at the access point, thereby effectively reducing the frequency error to zero." *Id.*, ¶42. As another example, the terminal uses the steered reference pilot "for channel estimation." *Id.*, ¶12. The terminal then uses the channel estimate "to recover the transmitted data." *Id.*, ¶7.

C. Tong

80. Tong discloses a "wireless communication system" that allows a base station "to select N antennas from an associated group of M antennas for transmitting multiple streams of data to a given user." EX1005, Abstract. The wireless communication system includes "a base station controller (BSC) 10 [that] controls wireless communications within one or more cells 12, which are served by corresponding base stations (BS) 14." *Id.*, 3:19-23. "Each base station 14 facilitates communications with user elements 16, which are within the cell 12 associated with the corresponding base station 14." *Id.*, 3:23-26.

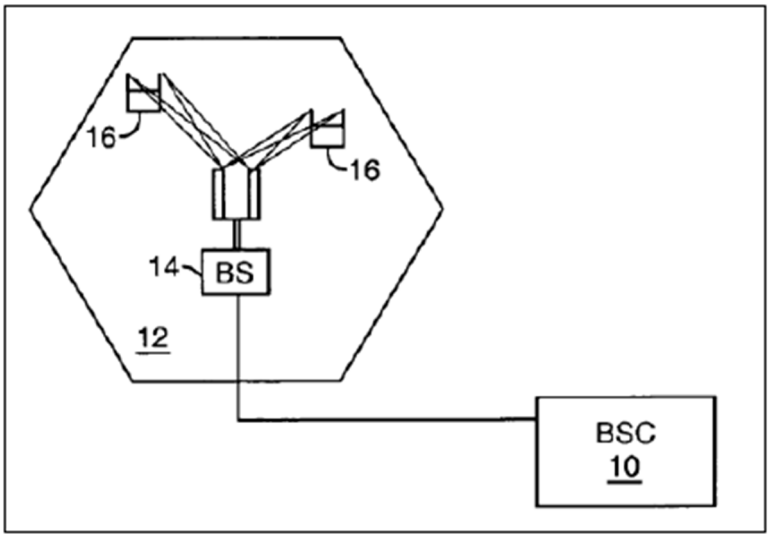

EX1005, FIG. 1.

81. The base station 14 provides data, such as "voice, data, or control information," to the appropriate user elements 16. *Id.*, 4:31-42. The data is "preceded by pilot signals, which are known by the intended user element 16." *Id.*,

5:67-6:5. The user element 16 "use[s] the pilot signals for channel estimation." *Id*. Specifically, the user element 16 includes a "channel estimation function 86" that determines "channel responses corresponding to channel conditions" between the base station 14 and user element 16. *Id.*, 6:33-35. The user element uses the channel responses to "recover the transmitted symbols." *Id.*, 6:35-58.

82. Tong also discloses that the base station 14's transmit antennas can transmit the data and pilot signals via beam-forming by "transmitting the same data simultaneously from multiple transmit antennas in a manner intended to allow the energy of the multiple transmitted signals to combine in the channel in a constructive fashion to provide additional gain." *Id.*, 8:50-66. For instance, as shown in Figure 7A, "data transmitted from transmit antennas 40 2 and 40 3 combine during transmission to effectively reinforce each other and provide a stronger signal at the receiver." *Id.*, 11:60-12:4. Tong explains that this technique is configured "to optimize channel capacity, signal-to-noise ratios, or a combination thereof." *Id.*, 12:4-6.

D. Li

83. Li discloses a "method for subcarrier allocation and loading for a multi-carrier, multi-subscriber system." EX1007, Abstract. Li's cellular system implements "orthogonal frequency division multiple access (OFDMA)" in which "multiple subscribers simultaneously use different frequency subcarriers." *Id.*, ¶5.

Li's system includes base stations that "periodically broadcast[] pilot OFDM symbols to every subscriber within its cell." *Id.*, ¶28. The pilot symbols "are known to both the base station and the subscribers," are used by the subscribers for various system functions, such as "time and frequency synchronization, channel estimation and signal-to-interference/noise (SINR) ratio measurement for cluster allocation." *Id.* "The pilot symbols may be different for different cells (or sectors)." *Id*. For instance, a subscriber can "estimate[] the SINR [signal-to-interference/noise] for each cluster from the pilot symbols" by "estimat[ing] the channel response, including the amplitude and phase," and then "calculat[ing] the interference/noise from the received signal." *Id.,* ¶44.

E. Smee

84. Smee discloses "[p]ilot transmission schemes suitable for use in wireless multi-carrier (e.g., OFDM) communication systems." EX1017, Smee, Abstract. The pilot transmission schemes utilize "frequency orthogonality" by causing different base stations to transmit pilots "on disjoint sets of subbands" (subcarriers). *Id.*, ¶10; *see also id.,* ¶39. "Each cell or sector only transmits pilot on the subbands in the set assigned to that cell/sector." *Id.*, ¶46.

85. For instance, Smee's Table 2 shows an example subband set allocation for frequency orthogonality. *Id.*, ¶47. As can be seen, each "set" includes

different subbands or subcarriers. Each set is assigned to a particular cell or cell sector for pilot transmission. *Id.*, ¶46.

TABLE 2

Set	Subbands
1	10, 20, 30, . . . 500
2	11, 21, 31, . . . 501
3	12, 22, 32, . . . 502
4	13, 23, 33, . . . 503
5	14, 24, 34, . . . 504
6	15, 25, 35, . . . 505
7	16, 26, 36, . . . 506
8	17, 27, 37, . . . 507
9	18, 28, 38, . . . 508

EX1017, Table 2.

Each set is assigned to a particular cell or cell sector for pilot transmission. *Id*. Figure 3A shows an example assignment of subband sets to cluster of cells/cell sectors "to achieve frequency orthogonality" based on the subband sets of Table 2. *Id.*, ¶56. "Each of the 9 sectors in the cluster is assigned one of 9 subband sets" (*e.g.,* sets 1-9 as indicated in Table 2 and Figure 3A). *Id*. "Each sector would then transmit its pilot on only the subbands in its assigned set." *Id*.

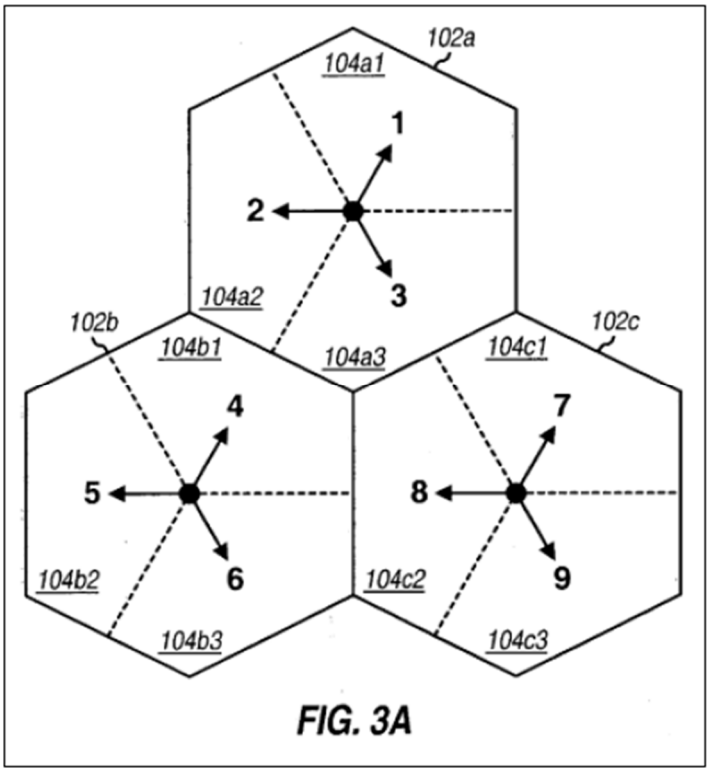

EX1017, FIG. 3A.

XII. GROUND 1: THE COMBINATION OF KIM AND TONG TEACHES CLAIMS 1-30.

86. It is my opinion that the combination of Kim and Tong teaches claims 1-30 for the reasons provided below.

A. A POSA would have been motivated to combine Kim and Tong

1. A POSA would have been motivated to implement beamforming in Kim's base station, as taught by Tong.

87. A POSA would have been motivated to implement beamforming, as taught by Tong, in Kim's OFDMA-based cellular system. Kim's base station transmits a "downlink signal" to a mobile terminal using "at least one transmit

antenna." EX1004, 29:16-18, 45:21-46:16. Kim seeks to improve signal quality of its downlink signal that is transmitted using the "at least one transmit antenna." *Id.*, 29:16-18, 32:3-15, 34:12-17 (selecting common pilot patterns having "a power greater than a predefined reference value"), 45:21-46:16. But Kim does not disclose how its multiple antennas could be used to improve signal quality—a well-known characteristic that had been a motivating force for cellular system designers for years before the '512 patent. A POSA would have thus sought references for communication systems teaching efficient antenna transmission techniques. Tong is such a reference.

88. Like Kim, Tong teaches a cellular system that uses OFDM communication techniques to transmit pilot signals from a base station to mobile terminals using multiple antennas. *Id.*, 29:16-18, 45:21-46:16; EX1005, 4:49-55, 5:64-6:5, 8:61-9:4; *see also* §XI.C. Tong provides motivation for implementing beam-forming in multiple antenna systems, such as Kim's—"there is a need to provide signal reinforcement in the communication channel to provide a beam-forming effect in an efficient manner in a MIMO system." EX1005, 1:43-67; *see also* EX1004, 31:17-32:7.

89. Tong also explains that implementing beam-forming to transmit signals from the base station to the mobile terminals is beneficial to "provide additional gain," to "increase the signal-to-noise ratio at a receiver," and to

"improve[e] the system capacity." EX1005, 8:61-9:4, 11:23-28. Tong further explains that beam forming can be used to "optimize channel capacity, signal-to-noise ratios, or a combination thereof." *Id.*, 8:50-66, 11:60-12:6. Tong's beam-forming techniques are implemented "in an efficient manner." *Id.*, 1:62-67.

90. A POSA would have understood that cellular systems implementing beam-forming in cellular systems, such as Kim's, would also provide other benefits, such as "efficient-utilization of spectral resources by exploiting the spatial (angular) separation of users, cost efficiency, increased range or capacity, and easy integration." EX1011, 1:25-32. Further, such beam-forming "enhance[s] reception of signals from different angles of arrival," "enhance[s] the quality of transmission of signals to different users." EX1012, 1:30-33; *see also* EX1026, 1:25-34 ("Beamforming may provide a number of benefits such as greater range and/or coverage per unit of transmitted power, improved resistance to interference, increased immunity to the deleterious effects of multipath transmission signals, and so forth.").

91. A POSA would have understood that such benefits could be achieved by implementing beam forming in Kim's system to beamform *at least some subcarriers of the first plurality of subcarriers or the second plurality of subcarriers*. A POSA would have thus been motivated to implement such techniques in Kim's system. In the combined system, Kim's "plurality of transmit

antennas" would be implemented to provide beam-forming for at least some of the subcarriers of the downlink signal.

92. In addition to the motivations described above, a POSA would have been further motivated to combine Kim and Tong because both are in the same general field of cellular communications, and address the same problem—efficient communications between base stations and mobile terminals. And a POSA would have had a reasonable expectation of success in implementing beamforming at least because it was a well-known technique commonly used in wireless communication systems. *See* §VII.D. Indeed, beamforming was well-known in cellular systems for well over a decade prior to the priority date of the '512 patent. *E.g.,* EX1027, Searle, 1:41-45 ("The ideal base station antenna pattern is a beam of narrow angular width"), 2:7-31; *see also* EX1010, Abstract; EX1011, 1:25-32; EX1012, 1:30-33. Kim's base station already implements multiple antennas to transmit its downlink signal. *E.g.,* EX1004, 29:16-18, 30:14-16. And Tong's beam-forming techniques are provided for multiple antenna (e.g., MIMO) systems, such as Kim's. EX1005, 1:43-67; *see also* EX1004, 31:17-32:7. Tong also teaches that its beam-forming techniques are "beneficial in OFDM environments," such as Kim's. EX1005, 14:24-25. Thus, implementation of beamforming in Kim's base station would not require additional hardware other than implementing well known mathematical algorithms related to beamforming leveraging the Q_1 pilot pattern for

channel estimation. For instance, at least one of Kim's "plurality of transmit antennas" would be implemented to "redundantly transmit data being transmitted over another of the transmit antennas" to "allow the energy of the multiple transmitted signals to combine in the channel in a constructive fashion." EX1004, 31:17-18; EX1005, 8:50-9:2.

93. Further, as evident from the above discussion, a POSA could have combined the system of Kim with the teachings of Tong by known methods, and the results of the combination would have been predictable to a POSA. A POSA would have readily understood how to adapt Kim's transmit antennas 2102 so that the base station implements beamforming, such as by implementing the antennas as arrays (*e.g.,* by leveraging the existing antenna elements) whose transmissions combine "in a constructive fashion." EX1005, 8:50-66. Thus, a POSA would have understood that implementing beam-forming in Kim's system would merely amount to the use of known technique (beam-forming at least some subcarriers of the downlink signal) to improve similar devices (Kim and Tong's OFDM cellular base stations) in the same way ("provide a stronger signal at the receiver"). *Id.*, 12:1-4).

2. A POSA would have been motivated to use Kim's pilots for channel estimation, and to recover the transmitted data, as taught by Tong.

94. A POSA would have also been motivated to combine Kim and Tong so that Kim's mobile terminals use the Q1 pilot pattern for channel estimation and to recover the data provided in Kim's downlink signal traffic slots. EX1004, 12:6-10; EX1005, 6:2-58.

95. As explained above, Kim's "OFDMA-based cellular system" includes a terminal (*mobile station*) configured to receive and recover "traffic data" on a downlink signal transmitted by a base station. EX1004, 1:23-2:3. As I explained in §VII.B, in cellular systems, the downlink signal undergoes "variations in phase and amplitude caused during propagation of the signal along the channel" between the base station and terminal. EX1008, Ma '559, 1:23-25, 1:50-53; EX1024, 117. This variation in phase and amplitude is called the "channel response." EX1008, 2:1-4; *see also* EX1024, 117-118. A POSA would have understood that, to accurately recover the "traffic data" on the downlink signal, "the receiver can determine the channel response," and "compensate for the channel degradation" of the channel response. EX1008, 2:4-6; *see also* EX1024, 117-118; EX1025, 1:52-61. "The determination of the channel response is called channel estimation." EX1008, 2:6-7; *see also* EX1024, 117-118; EX1025, 1:52-61.

96. A POSA would have understood that such channel response issues would affect communication between Kim's mobile and base stations. Thus, in view of these well-known considerations in wireless communication systems, a POSA would have sought references for estimating channel responses of cellular systems, such as Kim's. Tong is such a reference.

97. As explained above, Tong's user element 16 includes a "channel estimation function 86" that "provides channel responses corresponding to channel conditions" of the received downlink signal. EX1005, 6:33-35, FIG. 5. "The channel estimates provide sufficient channel response information to allow the STC decoder 88 to decode the symbols." *Id.*, 6:39-42. Tong's receiver "recover[s] the originally transmitted data 104" based on the channel estimate. *Id.*, 6:35-39, 6:43-58.

98. A POSA would have understood that Tong's techniques would be beneficial in Kim's system to estimate the channel response so that the mobile terminal could accurately recover the transmitted data in view of the channel response. Tong teaches that its receiver "use[s] the pilot signals for channel estimation." *Id.*, 6:2-5. Indeed, cellular systems commonly implemented pilot signals for channel estimation. *See* §VII.B; EX1001, 1:36-43 ("In multi-carrier wireless communications, many important system functions such as frequency synchronization and *channel estimation*, depicted in FIG. 1, are facilitated by using

the network information provided by a portion of total subcarriers such as *pilot subcarriers*."); EX1008, 2:7-9 ("The inclusion of pilot symbols in each OFDM symbol allows the receiver to carry out channel estimation."); EX1009, 1639 (channel estimation "can be obtained by occasionally transmitting known data or so called 'pilot symbols'"). Specifically, receivers in such systems "compare[] the received value of the pilot symbols with the known transmitted value of the pilot symbols to estimate the channel response." EX1008, 2:9-14; *see also id.,* 3:31-35; EX1009, 1639 ("The receiver interpolates the channel information derived from the pilots to obtain the channel estimate for the data signal."); EX1024, 117-118; EX1025, 1:52-61.

99. Thus, a POSA would have sought to enable Kim's terminal to use the received common pilot signals (Q1 pilot pattern) for estimating the channel to recover the traffic data provided on the downlink signal. Kim explains that "when the number of cells in the mobile communication system is less than the number of pilot patterns, a specific pilot pattern is allocated to each cell, and when the number of cells is greater than the number of pilot patterns, the cells are grouped by the number of pilot patterns, and different pilot patterns are allocated in a single group. EX1005, 24:16-19. This means that the cell specific pilot patterns and the pilot patterns that are common to multiple cells depending on the configuration of the networks, i.e., the number of cells versus the number of pilot patterns. The pilot

patterns for the cell specific use and the common use come from the same set of pilot patterns and are allocated to be used for both the cell specific use and the common use. As such, a POSA would have been motivated to enable Kim's terminal to use the received common pilot signals (Q1 pilot pattern) for estimating the channel to recover the traffic data provided on the downlink signal.

100. The Kim-Tong mobile terminals would implement a "receive path" including a "channel estimation function," for data recovery, such as taught by Tong. EX1005, 6:33-58, FIG. 5. This would enable Kim's terminal to determine the "channel degradation" caused by the channel response so that the terminal can accurately recover the traffic data. *Id.*; EX1008, 2:4-6; EX1009, 1639, FIG. 1; EX1024, 117-118.

101. And a POSA would have had a reasonable expectation of success in implementing such features. Indeed, such channel estimation techniques were well-known and commonly implemented in cellular OFDM systems as well as in other wireless systems. *See* §VII.B. A POSA would have understood that such techniques would be a natural and logical use of Kim's downlink pilot signals. Thus, a POSA would have not encountered any unreasonable technical hurdles in implementing such modifications. Accordingly, a POSA would have understood that such modifications would merely amount to the use of a known technique (pilot aided channel estimation for data recovery) to improve similar devices

(Kim's terminals) in the same way (accurate data recovery based on known channel degradation).

B. Independent Claim 1.

102. The combination of Kim and Tong teaches independent claim 1 for the reasons provided below. A POSA would have been motivated to combine Kim and Tong to arrive at claim 1 for the reasons provided in §XII.A.

1. [1.P]: An orthogonal frequency division multiple access (OFDMA)-compatible base station that uses subcarriers in a frequency domain and time slots in a time domain, the OFDMA-compatible base station comprising:

103. To the extent limiting, Kim discloses the preamble.

104. Kim discloses a "base station of an OFDMA-based mobile communication system." EX1004, 45:21-46:1, *see also id.,* 1:23-25. Kim's base station *uses subcarriers in a frequency domain and time slots in a time domain* within the OFDMA-based mobile communication system. For instance, the base station receives a "downlink signal" that includes "pilot symbols provided on the time and frequency axes." *Id.,* Abstract.

105. Figure 1 depicts an example frame of a downlink signal transmitted by Kim's base-station and received by a mobile terminal. *Id.*, 11:18-21. The frame includes a common slot 10 and traffic slots 20. *Id*. The traffic slots 20 "include[] pilot symbol[s] given with respect to the time axis and the frequency axis." *Id.*, 12:6-8. "The pilot symbol 200 is inserted per group of Nf subcarriers with respect

to the frequency axis and per group of Nt symbols with respect to the time axis." *Id.*, 12:8-10; *see also id.,* 24:2-25:5. A POSA would have understood that each cell in the traffic slot 20 shown in Figure 1 represents a time slot on the time axis and a subcarrier on the frequency axis. *See* §VII.A.

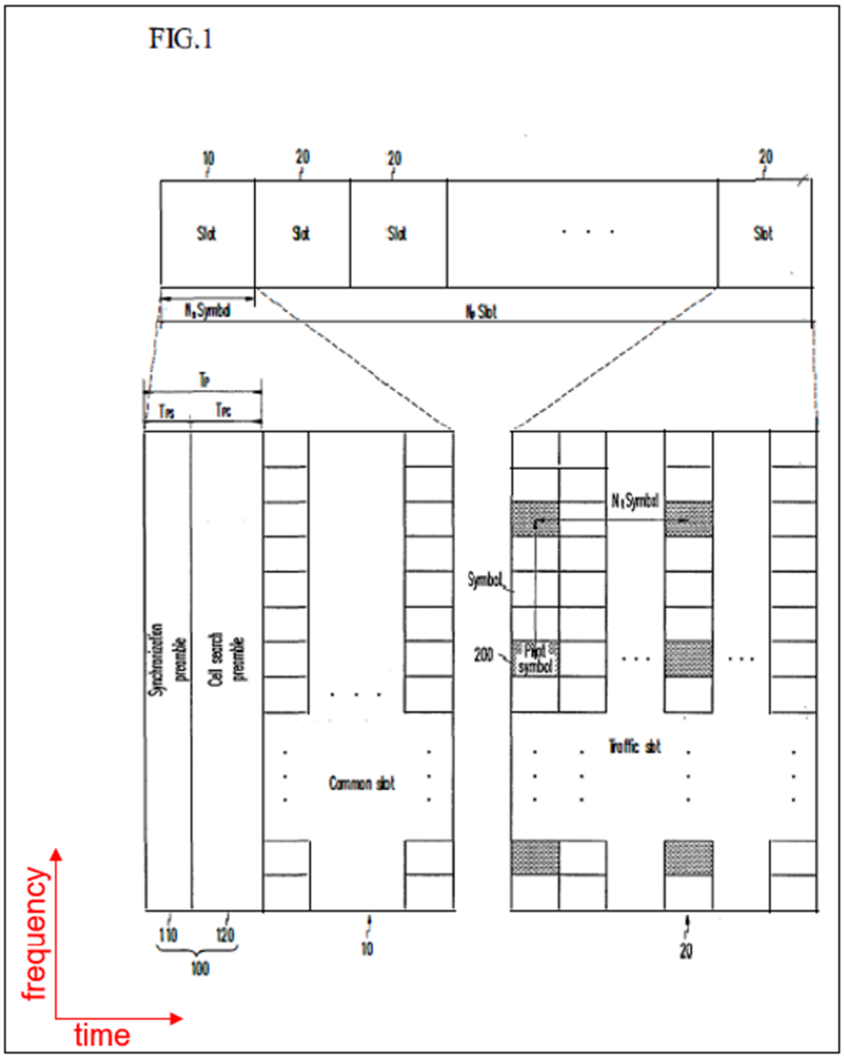

EX1004, FIG. 1 (annotated).

2. [1.1] a plurality of antennas; and a transmitter operably coupled to the plurality of antennas;

106. Kim's base station includes "a plurality of transmit antennas" 2102. *Id.*, 30:11-21. The transmit antennas are each coupled to an OFDM transmitter 2101, and to a downlink signal configuring device 2100. *Id.*, 46:2-16. A POSA would have understood that the transmit antennas 2102 (shown in red below) are the claimed *plurality of antennas,* and the downlink signal configuring device 2100 and OFDM transmitters 2102 (purple below) are the claimed *transmitter*.

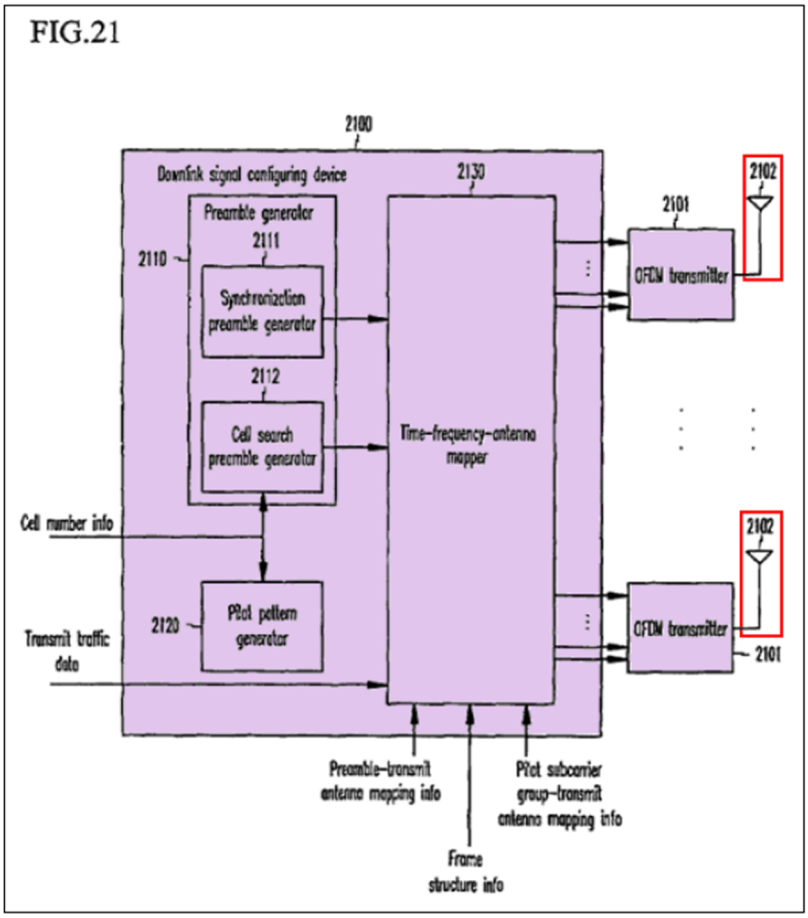

EX1004, FIG. 21.

3. [1.2] the transmitter configured to: insert first pilots of a first type onto a first plurality of subcarriers, wherein the first pilots are cell-specific pilots; and

107. Kim's downlink signal configuring device 2100 inserts pilot symbols into the downlink signal "for each group of N_f subcarriers at the s_1^{th} symbol 910, and the pilot symbols respectively have a pattern $P_{s1,c}$ (*i*) where c is a cell number, i is the ith pilot subcarrier in the s_1^{th} OFDM symbol." *Id.*, 24:2-11; *see also id.,* 12:6-10 (pilot symbols are "inserted per group of Nf subcarriers"). The pilots include a first pilot pattern in common for each cell and a second pilot pattern that is "different for each cell." *Id.*, 6:23-7:11, 24:20-25:5, claim 3. For instance, a pilot pattern $P_{s,c}$ (i) is configured to include "Q patterns." *Id.*, 24:20-25:5. "Q_1 patterns from among the Q patterns are used in common by all the cells, and residual Q_2 (= Q-Q_1) patterns are defined to be different for the respective cells." *Id*. Each Q_2 pattern is "a specific pattern for each cell." *Id.*, 26:3-7; *see also id.,* 24:2-19 (disclosing a "specific pilot pattern for each cell"). In such instance, the collective pilot pattern is given by $P_{q,s,c}$ (*i*), where *q* equals the particular pilot pattern number from 0 to Q-1; *s* equals the symbol number; *c* equals the cell number; and *i* equals the ith pilot subcarrier. *Id.,* 24:2-11, 24:20-25:5.

108. Figure 10, reproduced and annotated below, shows three example pilot patterns. The purple symbols represent pilot pattern 0, the blue symbols represent pilot pattern 1, and the green symbols represent pilot pattern Q-1 (the

pilot pattern number *q* is underlined in red). Kim designates a first subset (Q_1) of the Q pilot patterns as being "used in common by all the cells," and also designates a second subset ("residual Q_2 (=Q−Q_1) patterns") as being "defined to be different for the respective cells" (i.e., "a specific pattern for each cell" or *cell-specific*). *Id.*, 24:20-25:5, 26:3-7.

109. Figure 10 depicts a time-frequency grid with the y-axis representing frequency and the x-axis representing time. *See id.*, 12:6-10, 24:2-8; §VII.A. Each row represents a different subcarrier. *Id*. The symbols of each pilot pattern are inserted onto different subcarriers. EX1004, 12:6-10. For instance, the purple symbols of pilot pattern 0 are inserted onto a first group of subcarriers, the blue symbols of pilot pattern 1 are inserted onto a second, different group of subcarrier(s), and the green symbols of pilot pattern Q-1 are inserted onto a third, different group of subcarriers. A POSA would have understood that one or more of the pilot patterns shown in Figure 10 (e.g., pilot pattern 0 (purple)) represents the Q_1 common pilot pattern, and one or more other pilot patterns (e.g., pilot patterns 1 and Q-1 (blue and green)) represent the Q_2 *cell-specific* pilot patterns. Patterns 1 and Q-1 represent different pilot patterns that are each specific to the particular cell. Thus, the Q_2 (residual) *cell-specific* pilot patterns are inserted onto a first plurality of subcarriers.

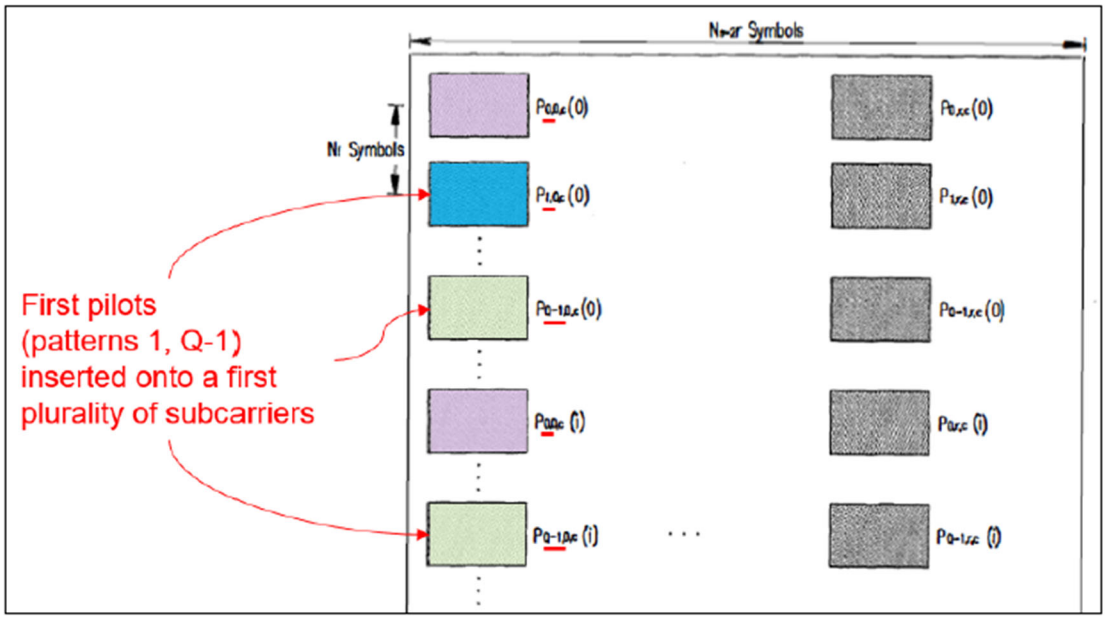

EX1004, FIG. 10 (excerpt, annotated).

110. Further, as I explained above, although Figure 10 shows three different pilot patterns (0, 1, Q-1), Kim discloses an example wherein an OFDM symbol includes only two pilot patterns, one that is common to each cell and one that is specific to a particular cell. *Id.*, 6:23-7:11 ("a pilot pattern of the pilot symbol… includes a first pattern in common for each cell and a second pattern different for each cell"). In such instance, the OFDM symbol, such as that shown in FIG. 10, would only include two different pilot patterns (e.g., $q = 0$ and $q = 1$), with one of the two being the Q_1 common pilot pattern and the other being the Q_2 cell-specific pilot pattern.

111. Thus, a POSA would have understood that Kim's transmitter is configured to insert first pilots of a first type onto a first plurality of subcarriers, wherein the first pilots are cell-specific pilots.

4. [1.3] insert data and second pilots of a second type onto a second plurality of subcarriers;

112. Kim's transmitter *inserts data* onto a *second plurality of subcarriers*. As explained, Kim's downlink signal includes a common slot 10 and multiple traffic slots 20. *Id.*, 11:18-21. The traffic slots include pilot symbols (grey cells in FIG. 1) as well as "traffic data" (white cells in FIG. 1) *Id.*; *see also id.,* 46:11-16.

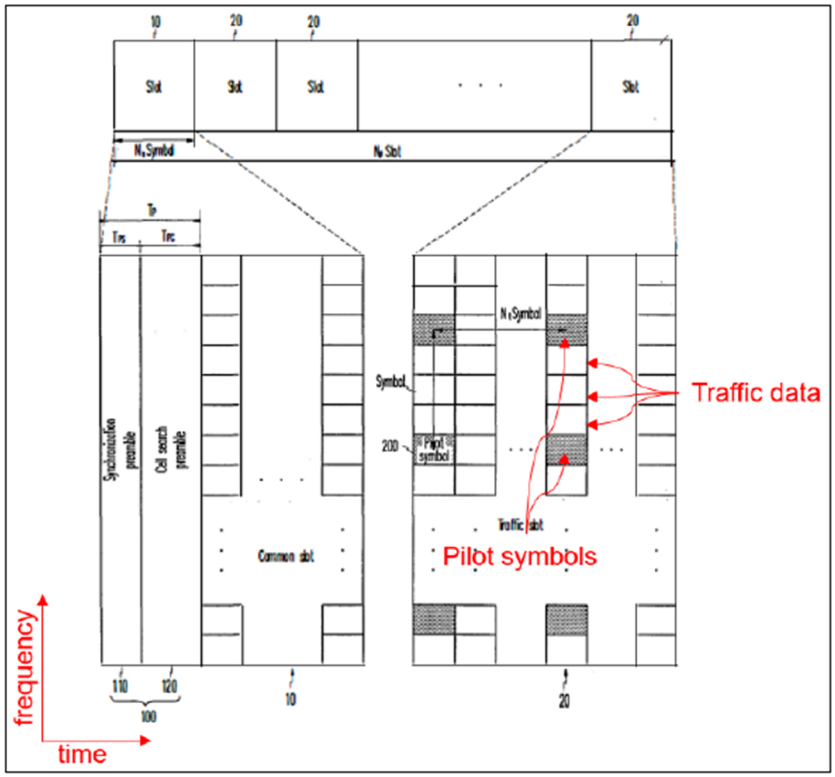

EX1004, FIG. 1 (annotated).

113. The transmitter "maps the [traffic] data according to the time, frequency, and antenna, and outputs mapped results to the OFDM transmitter 2101 per transmit antenna 2102." *Id.*, 46:11-16. A POSA would have understood that the transmitter inserts the traffic data onto a plurality of subcarriers within the traffic slot that are not occupied by the pilot symbols (the symbols colored white in slot 20 in Figure 1 above represent the slots that are not occupied by the pilot symbols).

114. Kim's transmitter also inserts *second pilots of a second type onto a second plurality of subcarriers*. As I explained for element [1.2], Kim's transmitter is configured to insert pilot signals onto subcarriers of the downlink signal. The pilot signals include Q patterns wherein Q_1 patterns "are used in common by all the cells," and Q_2 (= Q-Q_1) patterns are defined to be different for the respective cells. The Q_1 patterns that are "used in common by all the cells" are the claimed *second pilots of a second type*. As shown in Figure 10 below, and described for element [1.2], the different pilot patterns are inserted onto different subcarriers in the traffic slots of the downlink signal. For instance, in continuing with the example from element [1.2], as shown in Figure 10, the pilot pattern 0 (purple) represents the Q_1 common pilot pattern, and pilot patterns 1 and Q-1 (blue and green) represent the Q_2 *cell-specific* pilot patterns. Thus, the Q_1 common pilot patterns are inserted onto a *second plurality of subcarriers*. *Id.*, 12:6-10 (pilot symbols are "inserted per group of Nf subcarriers"); 24:2-11, 30:22-31:2.

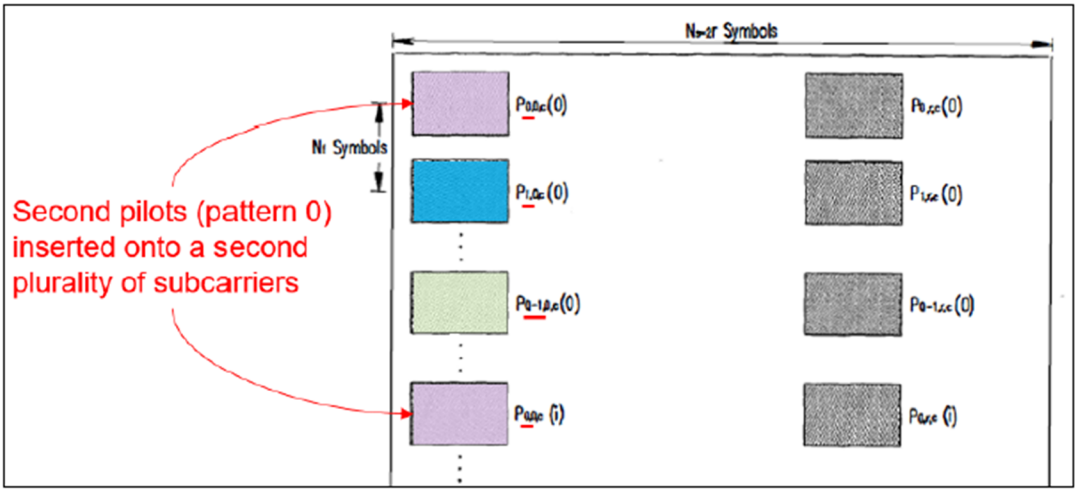

EX1004, FIG. 10 (excerpt, annotated).

115. The Q_1 common pilot patterns, Q_2 cell-specific pilot patterns, and traffic data are inserted onto subcarriers of an OFDM symbol that are transmitted at the same time in a single time slot. For instance, as shown in Figure 1 below, certain columns (representing respective OFDM symbols) of the traffic slot 20 include both traffic data and pilot symbols 200. *Id.*, 12:2-10; 46:11-16. Kim explains that the pilot patterns shown in Figure 10 are implemented in a downlink signal "having the same structure as that of FIG. 1." *Id.*, 25:6-9. Thus, the Q_1 and Q_2 pilot patterns shown in Figure 10 are transmitted in an OFDM symbol along with traffic data. The claimed *second plurality of subcarriers* comprises the subcarriers on which the Q1 common pilot patterns are inserted and also the subcarriers on which the traffic data is inserted—*e.g.,* the symbol highlighted below and including the white cells (traffic) and purple cells (example Q_1 common pilot patterns).

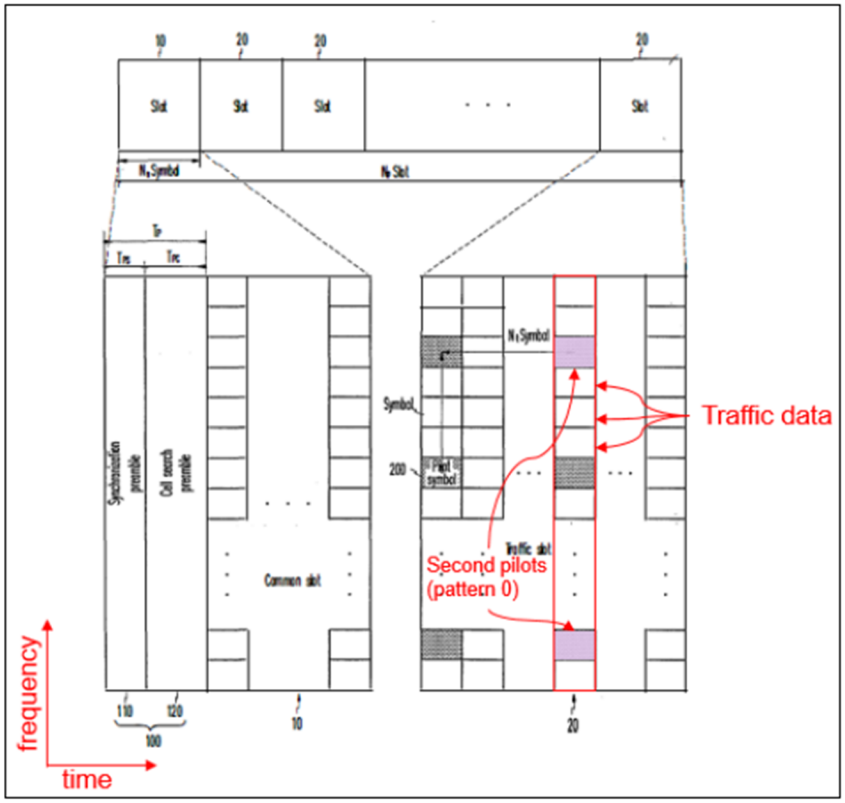

EX1004, FIG. 1 (annotated).

116. The Q1 pilot patterns used in common by all the cells are a different type of pilot from the Q2 pilot patterns that are specific to each cell because the Q1 common patterns are used to "estimate slot synchronization" and the Q2 specific patterns are used "to search the cells." *Id.*, 25:3-5, 25:18-26:7. Slot synchronization allows the mobile terminal to determine the timeslots in which the base station will transmit OFDM symbols. When a user terminal attempts to connect to a cell (or base station), it must first figure out the information about the cell, to which is trying to connect. Such information is transmitted in unit of slots in time by the cell, and in order to delimit a unit of information transmitted by the cell, the user

terminal must determine where the boundaries of a slot lies in time. This is the task known as the slot synchronization.

117. Cell searching enables the mobile terminal to identify the cell that transmitted data received by the mobile terminal. For instance, once the mobile terminal completes the slot synchronization, then it is able to obtain the information contained with the slot time, and from this information, cells are identified and the mobile terminal searches for the best cell (among possibly multiple cells), to which the user terminal will connect. This is the task known as the cell search.

118. Thus, the Q1 and Q2 pilot patterns are different types because they represent different types of information and are designed and used for different functions. Therefore, a POSA would have understood that Kim's transmitter is also configured to *insert data and second pilots of a second type onto a second plurality of subcarriers*.

5. [1.4] wherein at least some subcarriers of the first plurality of subcarriers or the second plurality of subcarriers are beam-formed; and

119. The combination of Kim and Tong renders obvious this element. As explained above, Kim's base-station inserts the Q2 cell-specific pilot patterns onto the first plurality of subcarriers, and inserts traffic data and the Q1 common pilot patterns onto a second plurality of subcarriers. However, Kim does not expressly

disclose that at least some of these subcarriers are *beam-formed*. But Tong discloses this limitation.

120. Tong discloses a "wireless communication system" that allows a base station "to select N antennas from an associated group of M antennas for transmitting multiple streams of data to a given user." EX1005, Abstract. Tong also discloses that the base station 14's transmit antennas can transmit the data and pilot signals via beam-forming by "transmitting the same data simultaneously from multiple transmit antennas in a manner intended to allow the energy of the multiple transmitted signals to combine in the channel in a constructive fashion to provide additional gain." *Id.*, 8:50-66. For instance, the system shown in Figure 7A implements beam-forming such that "data transmitted from transmit antennas 40 2 and 40 3 combine during transmission to effectively reinforce each other and provide a stronger signal at the receiver." *Id.*, 11:60-12:4.

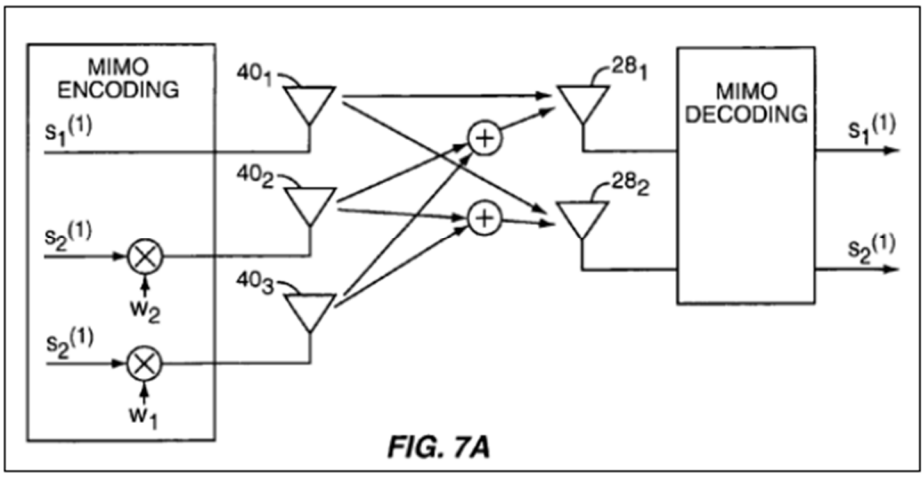

EX1005, FIG. 7A.

121. As I explained in §XII.A.1, a POSA would have been motivated to implement beamforming, as taught by Tong, in Kim's OFDMA-based cellular system. As also explained, such combination would predictably result in Kim's base station transmitting at least some of the first and second plurality of subcarriers using beam-forming. The beam-formed signals would predictably provide "additional gain," as well as other benefits explained in §XII.A.1. *Id.*, 8:61-9:4, 11:23-28.

6. [1.5] the plurality of antennas configured to transmit the first plurality of subcarriers and the second plurality of subcarriers in at least one of the time slots;

122. Kim discloses this element. As explained for element [1.P], Kim's base station uses subcarriers in a frequency domain and time slots in a time domain. Specifically, Kim's transmit antennas transmit the first plurality of subcarriers and the second plurality of subcarriers in at least one of the time slots.

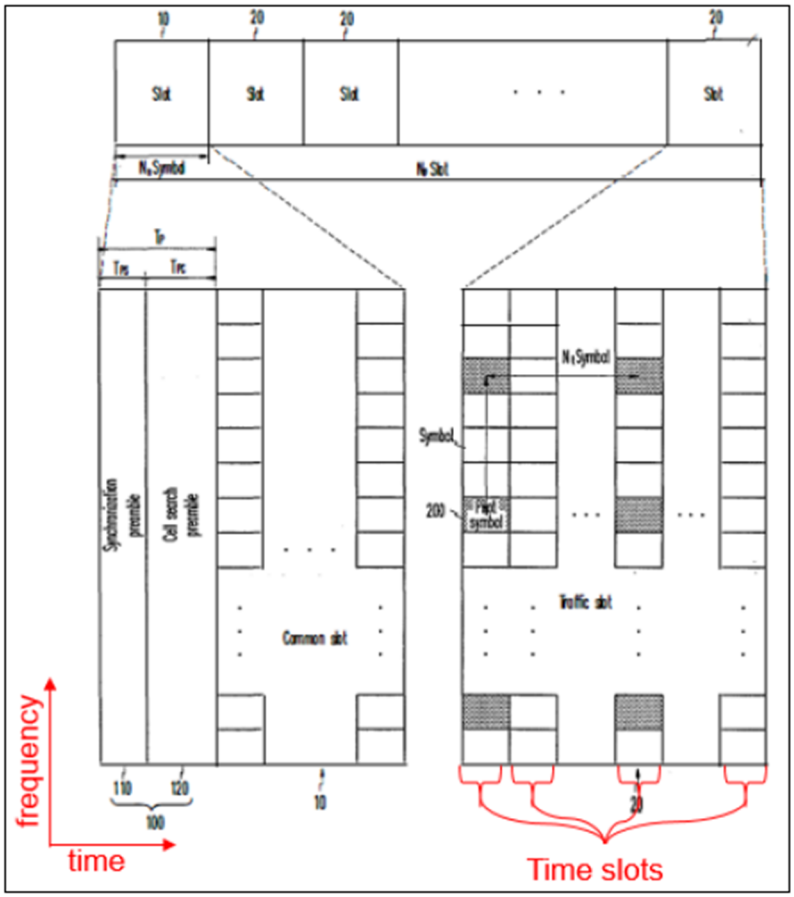

EX1004, FIG. 1 (annotated).

123. For instance, as shown in Figure 1, the traffic slot 20 maps traffic data (white cells) and pilot symbols (gray cells) to different time slots on the time axis. EX1004, 12:4-10 (the traffic slot 20 includes symbols "given with respect to the time axis and the frequency axis"). A POSA would have understood that each cell in the traffic slot 20 shown in Figure 1 represents a time slot on the time axis and a subcarrier on the frequency axis. *See* §VII.A. Thus, each column in the slots 20 represents and OFDM symbol that is transmitted in a certain time slot.

124. The time-frequency antenna mapper 2130 of the downlink signal configuring device 2100 (Figure 21) "receives… pilot subcarrier group-transmit antenna mapping information… and transmit traffic data," and maps the data and pilots "according to the time, frequency, and antenna, and outputs mapped results to the OFDM transmitter 2101 per transmit antenna 2102." *Id.*, 46:11-16.

125. As also explained for element [1.3], the first and second plurality of subcarriers are implemented within a single OFDM symbol, and transmitted in a single time slot. *See also* §VII.A. This is shown in the below annotations of FIG. 1. Kim also explains that "the pilot pattern shown in FIG. 10 is used in common for all the antennas" and transmitted on all the antennas. *Id.*, 31:10-16; 58:12-14.

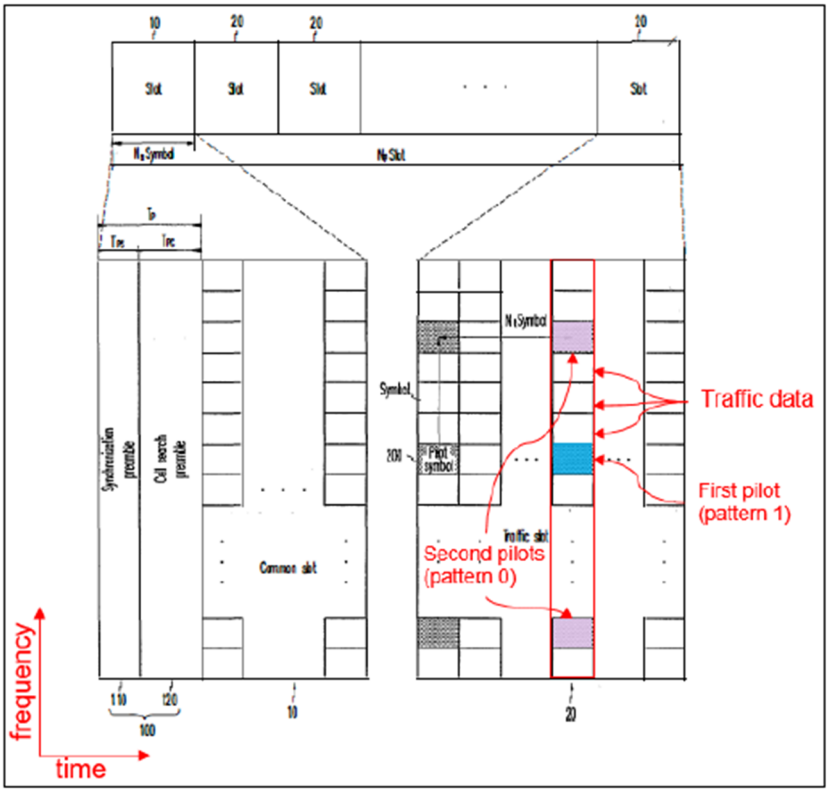

EX1004, FIG. 1 (annotated).

126. Thus, Kim's transmit antennas transmit the first plurality of subcarriers and the second plurality of subcarriers in at least one of the time slots.

7. [1.6] wherein the second type is different than the first type and wherein the first pilots do not interfere with the second pilots.

127. The Q1 pilot patterns (*second type*) are different than the Q2 pilot patterns (*first type*) because the Q1 pilot patterns are common to all the cells, and the Q2 pilot patterns are specific to each cell. Further, as explained for element [1.3], the Q1 common patterns are used to "estimate slot synchronization" and the Q2 cell-specific patterns are used "to search the cells." *Id.*, 25:3-5, 25:18-26:7.

Thus, the Q1 and Q2 pilot patterns are different types because they represent different types of information and are designed and used for different functions.

128. A POSA would have understood that the Q1 common patterns do not interfere with the Q2 cell-specific patterns because the respective patterns are inserted on different, orthogonal subcarriers in the OFDM symbol. As I explained in §VII.A, OFDM eliminates inter-carrier interference (i.e., interference among subcarriers) by spacing the subcarriers in such a way that the use of bandwidth by one subcarrier is null at the center frequency of other subcarrier frequencies. This fundamental concept of OFDM is known as orthogonality. Thus, different subcarriers in an OFDM symbol do not interfere with each other because they are spaced orthogonally.

C. Independent Claim 8

129. The combination of Kim and Tong teaches independent claim 8 for the reasons provided below. A POSA would have been motivated to combine Kim and Tong to arrive at claim 8 for the reasons provided in §XII.A.

1. [8.P] A method performed by an orthogonal frequency division multiple access (OFDMA)-compatible base station that uses subcarriers in a frequency domain and time slots in a time domain, the method comprising:

130. To the extent limiting, Kim discloses the preamble for the reasons provided for element [1.P]. Indeed, as explained for claim 1 and below for claim 8, Kim's base station performs the claimed method.

2. [8.1] inserting, by the OFDMA-compatible base station, first pilots of a first type onto a first plurality of subcarriers, wherein the first pilots are cell-specific pilots;

131. Kim discloses element [8.1] for the reasons provided for element [1.2].

3. [8.2] inserting, by the OFDMA-compatible base station, data and second pilots of a second type onto a second plurality of subcarriers;

132. Kim discloses element [8.2] for the reasons provided for element [1.3].

4. [8.3] wherein at least some subcarriers of the first plurality of subcarriers or the second plurality of subcarriers are beam-formed; and

133. The combination of Kim and Tong renders obvious element [8.3] for the reasons provided for element [1.4].

5. [8.4] transmitting, by the OFDMA-compatible base station, the first plurality of subcarriers and the second plurality of subcarriers in at least one of the time slots using a plurality of antennas;

134. Kim discloses element [8.4] for the reasons provided for element [1.5].

6. [8.5] wherein the second type is different than the first type and wherein the first pilots do not interfere with the second pilots.

135. Kim discloses element [8.5] for the reasons provided for element [1.6].

D. Independent Claim 15

136. The combination of Kim and Tong teaches independent claim 15 for the reasons provided below. A POSA would have been motivated to combine Kim and Tong to arrive at claim 15 for the reasons provided in §XII.A.

1. [15.P] An orthogonal frequency division multiple access (OFDMA)-compatible mobile station that uses subcarriers in a frequency domain and time slots in a time domain, the OFDMA-compatible mobile station comprising:

137. To the extent limiting, Kim discloses the preamble. Kim discloses "an OFDMA-based mobile communication system" that includes a "base station" and a "terminal" (i.e., *mobile station*) configured "to read signals of [the] base station." EX1004, 1:23-25, 45:21-46:1, *see also id.,* Abstract, FIG. 20.

138. Kim's terminal uses subcarriers in a frequency domain and time slots in a time domain for the reasons provided above for element [1.P]. Indeed, Kim's terminal receives the OFDM symbols provided on the downlink by the base station. *Id.*, 38:23-39:4; *see also id.,* 1:23-2:3 (the terminal "read[s] signals of a base station and synchronize[s] its time and frequency with the terminal for initial

synchronization, and search[es] cells in a cellular system." More specifically, the terminal receives the OFDM symbol subcarriers in a time slot corresponding to the time slot in which the OFDM symbol was transmitted.

2. [15.1] at least one antenna; and a receiver; and

139. Kim's terminal includes "at least one receive antenna." *Id.*, 38:23-39:4; *see also id.,* 1:23-25, 45:9-16. The terminal thus includes *at least one antenna*. Kim's terminal also includes a *receiver* comprising a synchronizer 2000 and that receives an "OFDM transmit signal." *Id.*, 43:9-45:20; *see also id.,* 14:14-16, 27:19-23. For instance, the synchronizer is configured to perform slot synchronization using "a pattern of a pilot in common for each cell," and to perform cell searching using a pilot pattern "specific to each cell." *Id.*, 43:16-44:10.

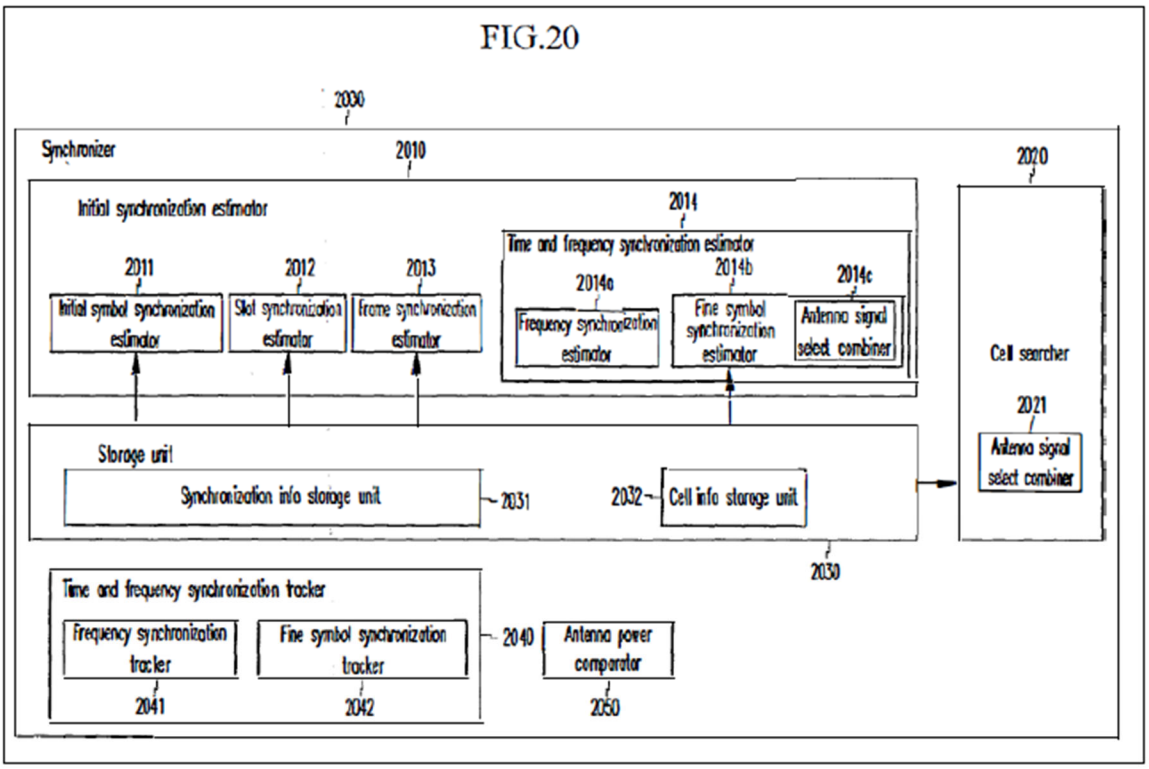

EX1004, FIG. 20.

3. [15.2] the at least one antenna and the receiver are configured to: receive first pilots of a first type on a first plurality of subcarriers, wherein the first pilots are cell-specific pilots; and

140. Kim's at least one receive antenna and receiver receive the OFDM downlink signal. *E.g., id.*, 11:15-17, 14:14-16, 38:23-39:4. The downlink signal includes *first pilots of a first type on a first plurality of subcarriers, wherein the first pilots are cell-specific pilots* for the reasons provided above for element [1.2]. A POSA would have understood that Kim's terminal thus receives such *cell-specific pilots* on the *first plurality of subcarriers* of the downlink signal via the antennas and receiver. *See id.*, 38:23-39:4.

4. [15.3] receive second pilots of a second type and data on a second plurality of subcarriers, wherein the first plurality of subcarriers and the second plurality of subcarriers are received in at least one of the time slots;

141. Kim's at least one receive antenna and receiver receive the OFDM downlink signal. *E.g., id.*, 11:15-17, 14:14-16, 38:23-39:4. The downlink signal includes *second pilots of a second type and data on a second plurality of subcarriers* for the reasons provided above for element [1.3]. A POSA would have understood that Kim's terminal thus receives such *second pilots of a second type and data* on the *second plurality of subcarriers* via the antennas and receiver. *See id.*, 38:23-39:4. The *first plurality of subcarriers and the second plurality of subcarriers are received in at least one of the time slots* for the reasons provided above for elements [1.3] and [1.5]. For instance, as I explained, the first and second pluralities of subcarriers are transmitted in an OFDM symbol at the same time, in a particular designated time slot. The receiver thus receives this OFDM symbol at a same time, in a particular designated time slot corresponding to the transmit time slot.

5. [15.4] wherein at least some subcarriers of the first plurality of subcarriers or the second plurality of subcarriers are beam-formed; and

142. The combination of Kim and Tong renders obvious this element for the reasons provided for element [1.4].

6. [15.5] the receiver is further configured to: recover the data using channel estimates from at least the second pilots; and

143. As explained for element [1.3], Kim's Q_1 patterns that are "used in common by all the cells" are the claimed *second pilots of a second type*. Kim's terminal is configured to perform "slot synchronization" using the Q_1 pilots. *Id.*, 24:20-25:5. A POSA would have understood that the "slot synchronization" provides an estimate of the channel between the base station and mobile terminal. Once the slots are synchronized using the Q_1 pilots, the receiver is able to determine the positions of the data symbols within the slots. These positions become the precise timing for the data symbols, which lead to recovery of the data.

144. To the extent Kim does not expressly disclose that the receiver is further configured to: recover the data using channel estimates from at least the second pilots, Tong discloses this limitation.

145. Tong discloses a cellular system that includes a base station 14 that transmits "downlink" signals to user elements 16 that are located within the cell 12 corresponding to the base station 14. EX1005, 3:19-31, 4:44-55, FIG. 1.

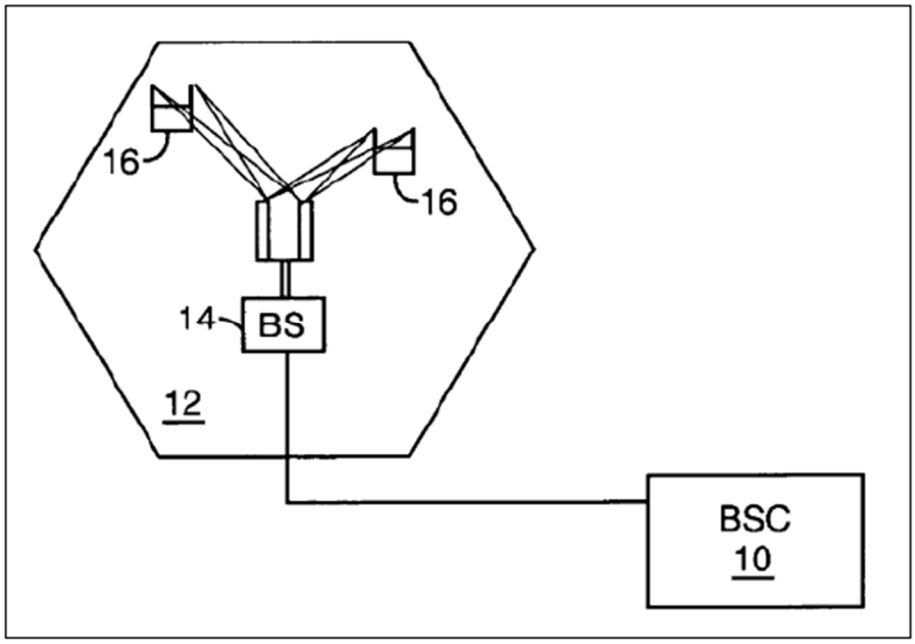

EX1005, FIG. 1 (excerpt).

146. In the downlink signal, the base station 14 transmits to the user element 16 "data" that is "preceded by pilot signals, which are known by the intended user element 16." *Id.*, 5:67-6:1; *see also id.,* 3:60-4:6. "The user element 16…use[s] the pilot signals for channel estimation and interference suppression." *Id.*, 6:2-5. The user element uses the channel estimation "to recover the originally transmitted data" in the downlink signal. *Id.*, 6:53-58.

147. To implement channel estimation for data recovery, the user element 16 includes a "channel estimation function 86" that "provides channel responses corresponding to channel conditions" of the received downlink signal. *Id.*, 6:33-35, FIG. 5. "The channel estimates provide sufficient channel response information to allow the STC decoder 88 to decode the symbols." *Id.*, 6:39-42. The decoded

symbols are provided on a "receive path" that ends with "de-scrambling logic 102 for de-scrambling using the known base station de-scrambling code to recover the originally transmitted data 104." *Id.*, 6:35-39, 6:43-58. As shown in Figure 5, an example receive path includes symbol de-interleaver logic 90, de-mapping logic 92, de-interleaver logic 94, rate de-matching logic 96, channel decoder logic 98, CRC logic 100, and the de-scrambling logic 102. *Id.*, 6:43-58.

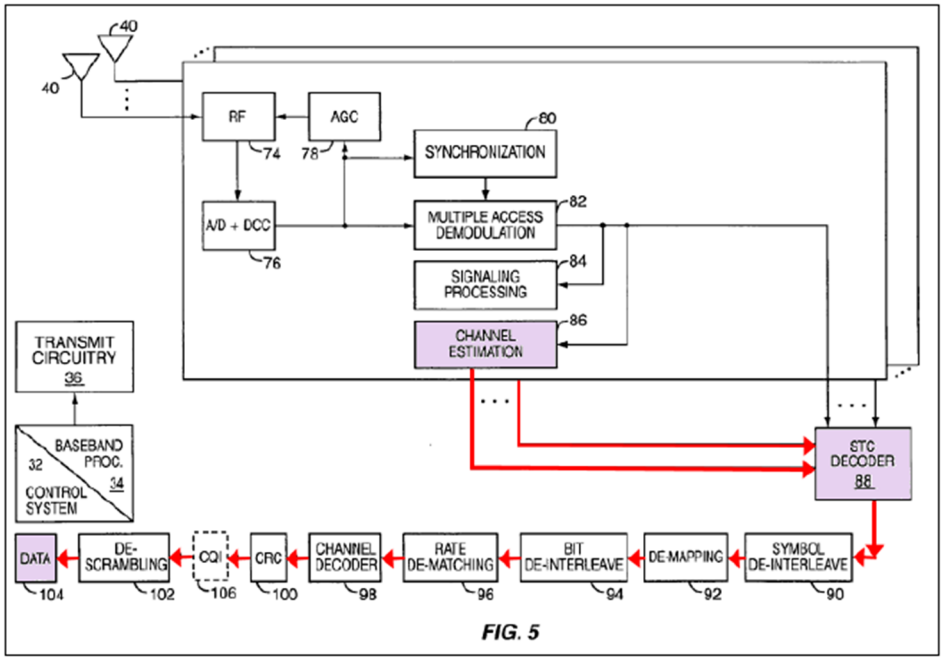

EX1005, FIG. 5 (annotated).

148. As explained in §XII.A.2, a POSA would have been motivated to combine Kim and Tong so that Kim's mobile terminals use the Q1 pilot pattern for channel estimation and to recover the data provided in Kim's downlink signal traffic slots. EX1004, 12:6-10; EX1005, 6:2-58. And a POSA would have had a

reasonable expectation of success in implementing these modifications for the reasons also provided in §XII.A.2.

7. [15.6] recover cell-specific information using the cell-specific pilots;

149. As explained for element [1.2], Kim's Q_2 pilot patterns are the claimed *cell-specific pilots*. These pilots implement a "specific pattern for each cell," and "are used to search the cells." EX1004, 26:3-7. Specifically, Kim's terminal uses the Q_2 pilots to "obtain [] cell information" (*cell-specific information*), and thereby identify the cell/base station that provided the downlink signal. *Id.*, 2:18-3:9. Specifically, to search the cells, the terminal determines the "cell number" associated with the cell that transmitted the downlink signal. *Id.*, 41:2-5; *see also id.,* 46:7-10, FIG. 18. This is because the Q_2 pilot patterns are each a "specific pattern for each cell," and enable an identification of the cell. *Id.*, 26:3-7.

8. [15.7] wherein the second type is different than the first type and wherein the first pilots do not interfere with the second pilots.

150. Kim discloses this element for the reasons provided above for element [1.6].

E. Independent Claim 23

151. The combination of Kim and Tong teaches independent claim 23 for the reasons provided below. A POSA would have been motivated to combine Kim and Tong to arrive at claim 23 for the reasons provided in §XII.A.

1. [23.P] A method performed by an orthogonal frequency division multiple access (OFDMA)-compatible mobile station that uses subcarriers in a frequency domain and time slots in a time domain, the method comprising:

152. To the extent limiting, Kim discloses the preamble for the reasons provided for element [15.P].

2. [23.1] receiving first pilots of a first type on a first plurality of subcarriers, wherein the first pilots are cell-specific pilots;

153. Kim discloses this element for the reasons provided for element [15.2].

3. [23.2] receiving second pilots of a second type and data on a second plurality of subcarriers, wherein the first plurality of subcarriers and the second plurality of subcarriers are received in at least one of the time slots;

154. Kim discloses this element for the reasons provided above for element [15.3].

4. [23.3] wherein at least some subcarriers of the first plurality of subcarriers or the second plurality of subcarriers are beam-formed;

155. The combination of Kim and Tong renders obvious this element for the reasons provided for element [15.4].

5. [23.4] recovering the data using channel estimates from at least the second pilots; and

156. The combination of Kim and Tong renders obvious this element for the reasons provided for element [15.5].

6. [23.5] recovering cell-specific information using the cell-specific pilots;

157. Kim discloses this element for the reasons provided above for element [15.6].

7. [23.6] wherein the second type is different than the first type and wherein the first pilots do not interfere with the second pilots.

158. Kim discloses this element for the reasons provided above for element [15.7].

F. Claims 2, 9, 16, and 24

159. Claims 2, 9, 16, and 24 recite "*wherein all subcarriers of the first plurality of subcarriers are different than all subcarriers of the second plurality of subcarriers*."

160. Kim discloses these claims. As shown in Figure 10, and as explained for elements [1.2]-[1.3] above, Kim's traffic slot implements different pilot patterns on different subcarriers in the traffic slot. That is, the Q2 pilot patterns that are specific to each cell (*first pilots*) are each inserted on different subcarriers than the Q_1 patterns "used in common by all the cells" (*second pilots*). As I explained above, each row in the time-frequency grid shown in Figure 10 (below) represents a different subcarrier. Thus, all subcarriers of the first plurality of subcarriers are different than all subcarriers of the second plurality of subcarriers.

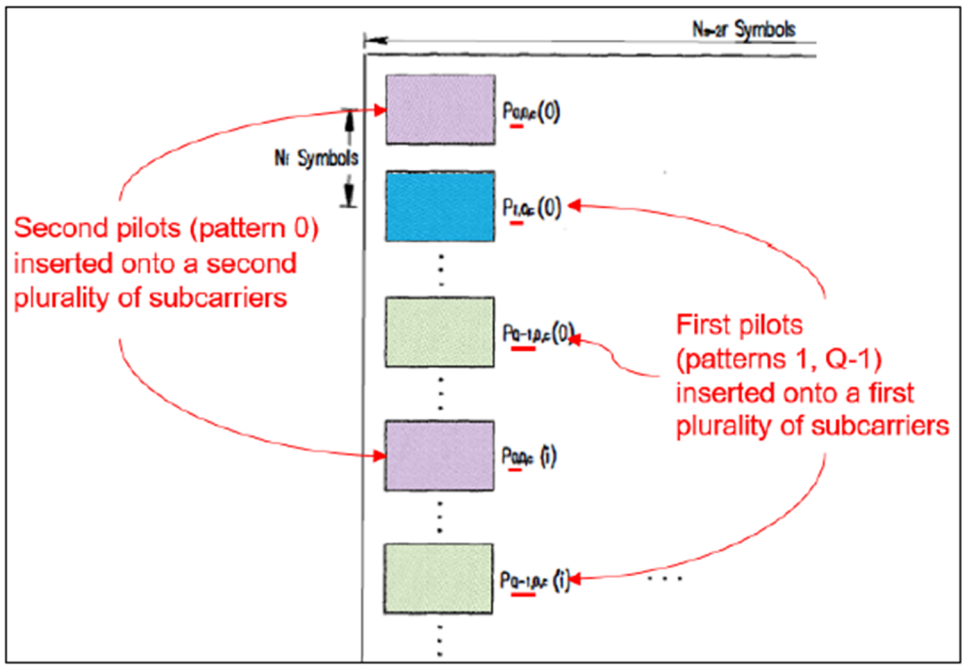

EX1004, FIG. 10 (excerpt, annotated).

G. Claims 3, 10, 17, and 25

161. Claims 3, 10, 17, and 25 recite "*wherein the second plurality of subcarriers includes an nth subcarrier and an n+18 subcarrier spaced apart from*

the nth subcarrier by 17 subcarriers and the first plurality of subcarriers includes an mth subcarrier and an m+20 subcarrier spaced apart from the mth subcarrier by 19 subcarriers."

162. As explained for elements [1.2]-[1.3], Kim's base-station inserts the Q2 cell-specific pilot patterns onto the first plurality of subcarriers, and inserts traffic data and the Q1 common pilot patterns onto a second plurality of subcarriers. Although Kim does not expressly disclose that *the second plurality of subcarriers includes an nth subcarrier and an n+18 subcarrier spaced apart from the nth subcarrier by 17 subcarriers and the first plurality of subcarriers includes an mth subcarrier and an m+20 subcarrier spaced apart from the mth subcarrier by 19 subcarriers*, a POSA would have found it obvious to implement the subcarriers in this claimed manner as an obvious design choice and as a matter of routine optimization.

163. Kim's base station inserts the pilot patterns into the downlink signal at certain pilot symbol intervals N_f. EX1004, 12:6-10, 24:2-25:5, 30:22-31:16, FIGs. 9, 10, 13. Kim discloses flexibility in the placement of its pilot symbols on various subcarriers. *See id*., FIGs. 1, 9, 10. For instance, the base station generates different pilot patterns based on characteristics of the respective cells, such as "cell number information." *Id.*, 46:2-7.

164. A POSA would have been motivated to optimize the particular pilot patterns on the downlink signal. *See* EX1009, 1639 ("The problem is to decide where and how often to insert pilot symbols"). This is because "pilot symbols are overhead, and should be as few in number as possible in order to maximize the transmission rate of data symbols." EX1008, 2:15-17; *see also* EX1009, Abstract. A POSA would have sought to configure the Kim-Tong pilot patterns to reduce "overhead" while still "enabl[ing] reliable channel estimates." EX1009, 1639.

165. And in doing so, a POSA would have found it obvious to position the pilot patterns such that the second plurality of subcarriers includes an nth subcarrier and an n+18 subcarrier spaced apart from the nth subcarrier by 17 subcarriers and the first plurality of subcarriers includes an mth subcarrier and an m+20 subcarrier spaced apart from the mth subcarrier by 19 subcarriers. This would merely be a matter of routine experimentation. That is, a POSA, motivated by the above described and well-known principles for allocating pilots within downlink signals, would have experimented with adjusting the pilot allocations as a matter of routine. And a POSA would not have found any unreasonable technical hurdles in implementing the claimed allocation. Indeed, the '512 patent does not place any criticality on the claimed pilot arrangement, merely depicting such arrangement, without explanation, in the example shown in Figure 5. The '512 patent does not disclose any significance or advantage to this particular

arrangement. A POSA would have understood that the particular arrangement is merely one example arrangement that could be used.

H. Claims 4, 11, 18, and 26

166. Claims 4, 11, 18, and 26 recite "*wherein each cell-specific pilot of the cell-specific pilots is unique to a respective cell*."

167. As explained for element [1.2], each Q_2 pilot pattern (*cell-specific pilot*) is "a specific pattern for each cell." EX1004, 26:3-7. Thus, each cell-specific pilot of the cell-specific pilots is unique to a respective cell.

I. Claims 5, 12, 21, and 29

168. Claims 5, 12, 21, and 29 recite "*wherein the first plurality of subcarriers are not aligned in frequency with subcarriers of at least another cell onto which respective cell-specific pilots are inserted*."

169. Kim discloses that "the positions of the pilot symbols of antennas for the respective adjacent cells" can be differentiated. *Id.*, 32:3-7. For instance, Kim discloses that "subcarrier group numbers (group 0 to group 3) represent positions of the subcarriers for transmitting predefined pilot symbols so as to transmit pilot symbols of an antenna." *Id.*, 32:12-15. As shown in Table 1, reproduced below, the pilot symbols for various adjacent cells (*e.g.,* Cell C and Cell D) are transmitted on different subcarrier groups (for each antenna). Thus, these subcarriers are not

aligned in frequency with subcarriers of at least another cell onto which respective cell-specific pilots are inserted.

	Antenna 0	Antenna 1	Antenna 2	Antenna 3
Cell A	Group 0	Group 1	Group 2	Group 3
Cell B	Group 0	Group 2	Group 3	Group 1
Cell C	Group 3	Group 0	Group 2	Group 1
Cell D	Group 1	Group 2	Group 0	Group3
Cell E	Group 3	Group 1	Group 0	Group 2
Cell F	Group 2	Group 3	Group 0	Group 1

EX1004, Table 1.

J. Claims 6, 13, 20, and 28

170. Claims 6, 13, 20, and 28 recite "*wherein the second plurality of subcarriers are beam-formed*."

171. The combination of Kim and Tong renders obvious these claims for the reasons provided for element [1.4]. A POSA would have been motivated to beam-form the second plurality of subcarriers for the same reasons as provided for element [1.4]. A POSA would have understood that the advantages described for element [1.4] would apply to the beam-forming the second plurality of subcarriers. And a POSA would have also had a reasonable expectation of success in implementing these modifications for the reasons provided for element [1.4].

K. Claims 7 and 14

172. Claims 7 and 14 recite "*wherein the cell-specific pilots are used to convey cell-specific information*."

173. As explained for element [15.6], Kim's Q_2 pilot patterns (i.e., *cell-specific pilots*) are used by the terminal to "obtain [] cell information," (*cell-specific information*) and thereby identify the cell/base station that provided the downlink signal. *Id.*, 2:18-3:9. The cell information includes a "cell number" associated with the cell that transmitted the downlink signal. *Id.*, 41:2-5; *see also id.,* 46:7-10, FIG. 18. This is because the Q_2 pilot patterns are each a "specific pattern for each cell." *Id.*, 26:3-7. Thus, the Q_2 pilots *convey cell-specific information*.

L. Claims 19 and 27

174. Claims 19 and 27 recite "*wherein the first plurality of subcarriers are transmitted at a same time as the second plurality of subcarriers*."

175. As explained for elements [1.2]-[1.3], the first and second plurality of subcarriers are transmitted within the same OFDM symbol (*e.g.,* symbol 910 shown in Figure 9). These subcarriers within the OFDM symbols are transmitted at the same time within the same slot on the time axis. *Id.*, 12:6-10, 24:2-8, 24:20-25:5, FIGs. 9-10.

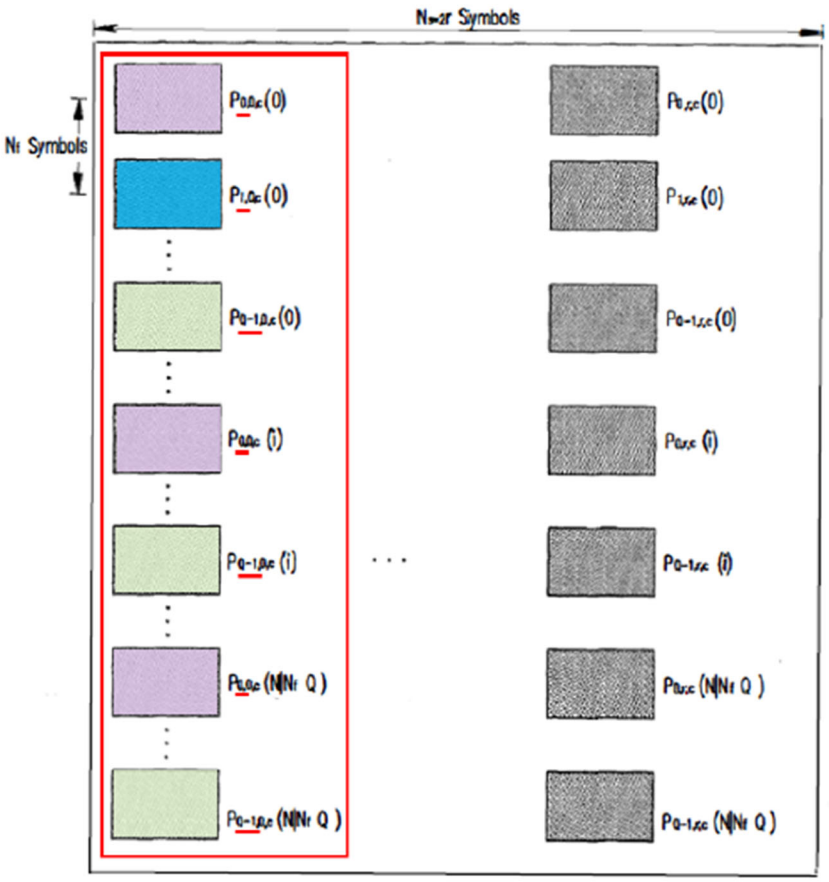

EX1004, FIG. 10 (annotated, excerpt).

M. Claims 22 and 30

176. Claims 22 and 30 recite "*extract[ing] cell-specific information from the cell-specific pilots*."

177. As explained for element [15.6] and claims 7 and 14, Kim's Q_2 pilot patterns (i.e., *cell-specific pilots*) are used to convey a "cell number" (*cell-specific information*) associated with the cell that transmitted the downlink signal. *Id.*, 41:2-5; *see also id.,* 46:7-10, FIG. 18. Upon receiving these pilot patterns, Kim's

terminal extracts the cell number from the signal for cell-searching to identify the cell that transmitted the signal. *Id.*, 35:6-8, 41:2-5.

XIII. GROUND 2: THE COMBINATION OF KETCHUM AND LI TEACHES CLAIMS 1, 3, 4, 6-8, 10, 11, 13-15, 17, 18, 20, 22, 23, 25, 26, 28, AND 30

178. It is my opinion that the combination of Ketchum and Li teaches claims 1, 3, 4, 6-8, 10, 11, 13-15, 17, 18, 20, 22, 23, 25, 26, 28, and 30 for the reasons provided below.

A. A POSA would have been motivated to combine Ketchum and Li

179. A POSA would have been motivated to implement Ketchum's system for cellular communication and such that Ketchum's base station is OFDMA-compatible, as taught by Li. Li discloses a cellular communication system that communicates using OFDMA techniques. EX1007, ¶¶19, 28. Like Ketchum's system, Li's OFDMA-compatible system implements carriers "containing multiple OFDM frequency subcarriers." *Id.*, ¶19. Ketchum's system is a "multiple-access" system "that supports a number of users." EX1006, ¶26.

180. But Ketchum does not expressly disclose how its system implements the multiple-access communications. A POSA would have understood that a multiple-access OFDM system could be implemented using a finite number of techniques, such as multicarrier CDMA, OFDM with TDMA, OFDMA, etc.

EX1015, 305. A POSA would have thus sought references for implementing multiple-access communication techniques that leverage OFDM.

181. Li is such a reference. A POSA would have sought to implement the "multiple-access" aspects of Ketchum's system using OFDMA techniques, as taught by Li. For instance, a POSA would have understood that "OFDMA is a logical extension of OFDM" that utilizes OFDM in communicating with multiple users (i.e., multiple-access). *Id.*, 307; EX1016, 1:16-34; *see also* §VII.A. Specifically, OFDMA divides a communication channel into subchannels or subcarriers using OFDM techniques. EX1015, 307; EX1016, 1:16-34. OFDMA then extends OFDM to implement multiple-access by assigning subsets of orthogonal sub-carriers to individual subscriber devices. EX1015, 307. In other words, in OFDMA, "[t[he subcarrier universe that is established via OFDM, but the subset of subcarriers assigned to each user can be (randomly) distributed among the universe of subcarriers." *Id*. Indeed, "from the use of multiple subcarriers" in OFDM, "it is an obvious step to… employ [frequency hopping] among OFDM subcarriers," such as by using OFDMA. *Id*. And because OFDMA was one of a finite number of identified, predictable solutions for implementing multiple-access in an OFDM system, a POSA would have found it obvious to implement OFDMA in Ketchum's system, as explicitly taught by Li.

182. A POSA would have further been motivated to implement Ketchum's system as a cellular system, as taught by Li, such that Ketchum's base stations are implemented to communicate within respective coverage areas, or cells. Ketchum does not limit its "wireless communication system" to a particular type of system. *See* EX1006, ¶¶6, 26. Indeed, a POSA would have understood that implementations of Ketchum's system would operate as a cellular system. For instance, Ketchum refers to its access points 110 as "base stations," which is a term commonly associated with cellular systems. *Id.*, ¶26; *see also e.g.,* EX1009, 1641. Ketchum's base station also communicates within a particular "coverage area," such as a cell. EX1006, ¶32. Further, OFDMA cellular systems were well-known in the art. *E.g.,* EX1013, Abstract (disclosing a "OFDMA [] based cellular system"); EX1014, 9:64-10:19 ("The modulation technique employed in OFDMA is OFDM.").

183. Thus, in the combined system, each of Ketchum's base stations would communicate within respective cells, as taught by the combination of Ketchum and Li. *See* EX1006, ¶32; EX1007, ¶¶19, 28. Each of Ketchum-Li's base stations would periodically broadcast pilots (e.g., beacon pilots, steered reference pilots, etc.) to every subscriber within its cell, as taught by the combination of Ketchum and Li. EX1007, ¶28 ("pilot symbols may be different for different cells"); EX1006, ¶217.

184. In addition to the motivations described above, a POSA would have been further motivated to combine Ketchum and Li because both are in the same general field of wireless communications, and address the same problem—implementing multiple access OFDM communication between base stations and mobile terminals. Accordingly, a POSA would have had a reasonable expectation of success in implementing Ketchum's system as a cellular, OFDMA compatible system, as taught by Li.

185. Specifically, both Ketchum and Li's base stations are OFDM systems. *See*, e.g., EX1006, FIG. 2 (showing the exemplary frame structure for data transmission in a TDD MIMO-OFDM system); EX1007, FIG. 2 (illustrating a time-frequency grid of OFDM symbols, pilots and clusters). More specifically, they are both based on Time Division Duplex (TDD)-OFDM systems. *See, e.g.,* EX1006, FIG. 2 (showing the exemplary frame structure for data transmission in a TDD MIMO-OFDM system); EX1007, ¶75. With the same framework for both Ketchum and Li, teaching from one can be implemented in the other with relative ease. Moreover, both Ketchum and Li utilize pilot signals (as will be explained below) to identify the cells as well as for the user terminals to estimate the channel conditions.

186. Thus, because such techniques were well-known and compatible with Ketchum's system, a POSA would not have experienced any unreasonable

technical hurdles in implementing these modifications. In this manner, a POSA would have understood that modifying Ketchum's system for cellular OFDMA communications would merely amount to combining prior art elements (Ketchum's multiple-access MIMO system and Li's OFDMA-based cellular system) according to known methods (implementing Ketchum's system using OFDMA communication techniques) to yield predictable results.

B. Independent Claim 1.

187. Ketchum or the combination of Ketchum and Li teaches independent claim 1 for the reasons provided below. A POSA would have been motivated to combine Ketchum and Li to arrive at claim 1 for the reasons provided in §XIII.A.

1. [1.P]: An orthogonal frequency division multiple access (OFDMA)-compatible base station that uses subcarriers in a frequency domain and time slots in a time domain, the OFDMA-compatible base station comprising:

188. To the extent that the preamble is found to be limiting, Ketchum, or the combination of Ketchum and Li, teaches the preamble. Ketchum discloses a "multiple-access MIMO system 100 that supports multiple users." EX1006, ¶26. The multiple access system 100 includes access points 110 that are also referred to as "base station[s]." *Id*. The access points 110 communicate using "orthogonal frequency division multiplexing (OFDM)." *Id.*, ¶¶33, 223-224. In this manner, the access points 110 transmit OFDM symbols having data on "a number of (N F) orthogonal subbands," each of which is "associated with a respective subcarrier

upon which data may be modulated." *Id.*, ¶¶34, 36. The OFDM symbols are sent in particular time slots in the time domain (e.g., during an "OFDM symbol period"). *Id.*, ¶36; *see also* §VII.A.

189. A POSA would have found it obvious to implement Ketchum's system to communicate using OFDMA because there were a finite number of known techniques for implementing a *multiple-access* OFDM system, such as Ketchum's. *Id.*, ¶¶26, 34; EX1015, 305 ("Five main approaches have emerged to accomplish multiple access using OFDM as the modulation type: multicarrier CDMA, [OFDMA], OFDM with TDMA, OFDM with CSMA/CA, OFDM with SDMA"). In such case, Ketchum's base station and terminals would be OFDMA-compatible.

190. In fact, Ketchum's base station allocates uplink and downlink resources by dividing time among multiple users. *See*, e.g., EX1006, ¶9, FIG. 2. As shown in Figure 2, Ketchum's base station is based on time-division multiplexing, multiple users can utilize the uplink and downlink resources by taking turn in time. It is straightforward to extend this time division multiplexing scheme to include time and frequency division among multiple users. Both time-division and frequency division techniques were widely used in the cellular communication at the time of the alleged '512 invention. A POSA would have thus had a reasonable expectation of success in implementing Ketchum's system to communicate using

OFDMA because OFDMA is a "logical extension" of OFDM for communicating with multiple mobile terminals. EX1015, 305, 307; *see also* §VII.A.

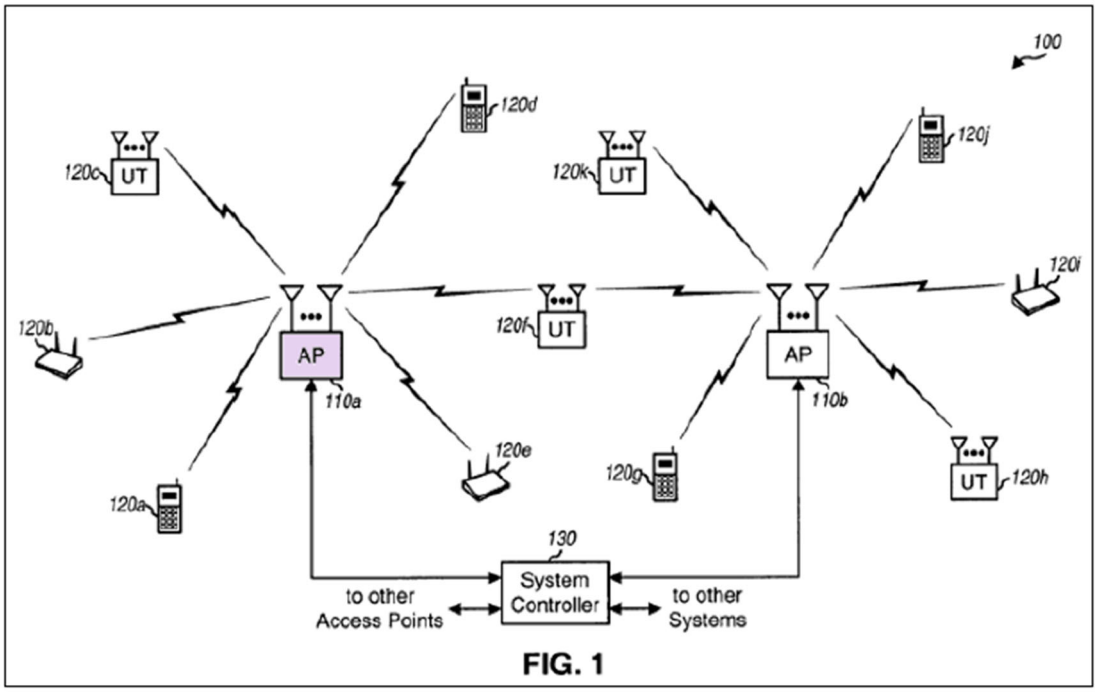

EX1006, FIG. 1 (annotated).

191. Moreover, to the extent it is argued that Ketchum's "multiple access" system that uses OFDM does not disclose or render obvious an OFDMA-compatible base station, Li discloses this feature.

192. Li discloses a cellular communication system that communicates using OFDMA. EX1007, ¶¶19, 28. The system includes base stations that "periodically broadcast[] pilot OFDM symbols to every subscriber within its cell (or sector)." *Id.*, ¶28. Thus, Li's base stations and subscribers (mobile stations) are OFDMA-compatible.

193. A POSA would have been motivated to modify Ketchum's system to handle cellular communications, and to include OFDMA-compatible base stations (access points) and mobile stations, as taught by Li, for the reasons provided in §XIII.A. And a POSA also would have had a reasonable expectation of success in implementing these modifications for the reasons provided in §XIII.A.

2. [1.1] a plurality of antennas; and a transmitter operably coupled to the plurality of antennas;

194. Each of Ketchum's access points (*base stations*) include "antennas 424a through 424d" (*a plurality of antennas*). EX1006, ¶¶223, 225. The access points also include a *transmitter* that includes a "controller 430," a "transmit (TX) data processor 414," a "TX spatial processor 420," and "modulators 422 a through 422 d." *Id.*, ¶¶224-225. As shown in Figure 4, the transmitter is operably coupled to the antennas 424. The transmitter and antennas work together to transmit the downlink signals to the user terminals 120. *Id.*, ¶225.

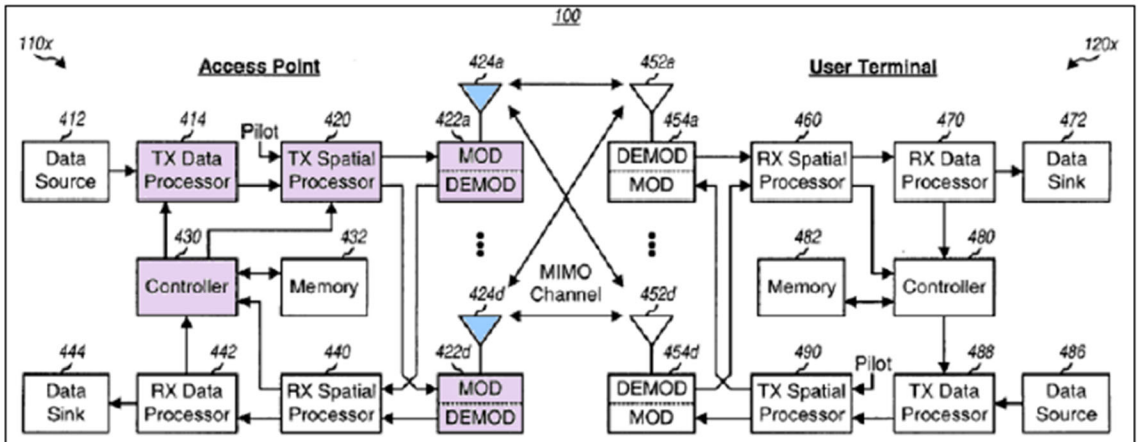

FIG. 4

EX1006, FIG. 4 (annotated).

195. Therefore, Ketchum discloses *a plurality of antennas* (antennas 424a through 424d) *and a transmitter operably coupled to the plurality of antennas* (controller 430, TX data processor 414, TX spatial processor 420, and modulators 422 a through 422 d).

3. [1.2] the transmitter configured to: insert first pilots of a first type onto a first plurality of subcarriers, wherein the first pilots are cell-specific pilots; and

196. Ketchum's access points 110 are configured to send "various types of pilot[s]" in the downlink signal. *Id.*, ¶12. The pilots "include[] a beacon pilot, a MIMO pilot, a steered reference or steered pilot, and a carrier pilot." *Id*. A POSA would have understood that the beacon pilots are the claimed *first pilots of a first type*.

TABLE 1

Pilot Types

Pilot Type	Description
Beacon Pilot	A pilot transmitted from all transmit antennas and used for timing and frequency acquisition.
MIMO Pilot	A pilot transmitted from all transmit antennas with different orthogonal codes and used for channel estimation.
Steered Reference or Steered Pilot	A pilot transmitted on specific eigenmodes of a MIMO channel for a specific user terminal and used for channel estimation and possibly rate control.
Carrier Pilot	A pilot used for phase tracking of a carrier signal.

EX1006, Table 1.

197. The beacon pilot includes a "set of pilot symbols" that are inserted onto "12 specific subbands" corresponding to a "B OFDM symbol," shown in Table 2 (represented as b(k)). *Id.*, ¶39. That is, Table 2 specifies an example set of subbands (e.g., -24, -20, etc.), and thus subcarriers, onto which the beacon pilot symbols are inserted. The 12 subbands of the B OFDM symbol are interspersed with "[s]ignal values of zeros." *Id*. Specifically, the TX spatial processor 420 of the access point 110 "multiplexes the scaled pilot symbols for all subbands used for beacon pilot transmission." *Id.*, ¶231, FIG. 5. As explained above, "each subband is associated with a respective subcarrier upon which data may be modulated." *Id.*, ¶34. A POSA would have understood that these 12 subcarriers are the claimed *first plurality of subcarriers*.

TABLE 2

Subband Index	Pilot Symbols: Beacon Pilot b(k)	Pilot Symbols: MIMO Pilot p(k)
...	0	0
−26	0	−1 − j
−25	0	−1 + j
−24	1 + j	−1 + j
−23	0	−1 + j
−22	0	1 − j
−21	0	1 − j
−20	−1 − j	1 + j
−19	0	−1 − j
−18	0	−1 + j
	...	

EX1006, Table 2 (excerpt, annotated).

198. The beacon pilots are *cell-specific pilots*. The user terminal 120 uses the beacon pilot to "acquire the [] frequency and timing" of the access point that transmitted the beacon pilot. *Id.*, ¶217, *see also* ¶¶12, 31, 41, 119; EX1030, '309 Provisional, ¶1302.[2] For instance, a POSA would have understood that, in Ketchum's system, the frequency and timing acquired by the user terminal are specific to particular access points (e.g., there is no master clock to which multiple access points are synchronized). For instance, Ketchum's user terminal uses the

[2] Ketchum incorporates the '309 Provisional by reference "in [its] entirety for all purposes." EX1006, ¶1.

beacon pilots to determine and lock its frequency to "to the clock at the access point." EX1006, ¶42. The frequency and timing of the access points are information specific to the particular access points. This is consistent with the '512 patent, which discloses that the cell-specific pilots are used "extract information unique to each individual cell." EX1001, 3:17-24.

199. A POSA would have also understood that Ketchum's access points 110 are associated with a "coverage area" or cell of the access points. *Id.*, ¶13 ("an access point may transmit a beacon pilot, a MIMO pilot, and a carrier pilot for all user terminals within its *coverage area*"). These pilot signals are important for the user terminals to identify the access point, determine the channel condition between the transmitting antenna and the receiving antennas, and properly receive and decode the received data. In order for a user terminal to properly connect to the access point or receive the data, the beacon pilot, MIMO pilot, steered reference, pilot, and carrier pilot must reach the user terminal with sufficient strength to be understood by the user terminal. The area within which these pilot signals can be received with sufficient strength is known as the coverage area, or cell, of the access point. Thus, because the beacon pilots are used to determine frequency and timing of the respective access points for the respective cells, the beacon pilots are *cell-specific pilots*.

200. To the extent Ketchum does not expressly disclose or render obvious that the beacon pilots are *cell-specific*, the combination of Ketchum and Li does.

201. As explained, Li discloses that its base stations "periodically broadcast[] pilot OFDM symbols to every subscriber within its cell (or sector)." EX1007, ¶28. The pilots are "different for different cells (or sectors)" (i.e., *cell-specific*). *Id*. The pilots "serve multiple purposes: time and frequency synchronization, channel estimation and signal-to-interference/noise (SINR) ratio measurement for cluster allocation." *Id*.

202. A POSA would have been motivated to implement Ketchum's communication system as a cellular system using OFDMA communication techniques, as explained above in §XIII.A. In doing so, a POSA would have understood that Ketchum's base stations would communicate within respective cells. In such implementation, Ketchum-Li's beacon pilots would be cell-specific pilots, such as taught by Li. Each of Ketchum-Li's base stations would periodically broadcast beacon pilots to every subscriber within its cell, as taught by the combination of Ketchum and Li. *Id.*; EX1006, ¶217. A POSA would have understood that such beacon pilots would be cell-specific pilots because the beacon pilots are used to "acquire the [] frequency and timing" of the access point that transmitted the beacon pilot. EX1006, ¶217; *see also id.,* ¶¶12, 31, 41, 119. And as

explained, in the modified system, each access point represents a particular coverage area/cell.

4. [1.3] insert data and second pilots of a second type onto a second plurality of subcarriers;

203. Ketchum's access point 110 also transmits steered reference pilots in the downlink signal to the user terminal. *Id.*, ¶¶12-13, 30-31. The steered reference pilots are the claimed *second pilots of a second type*. The steered reference pilot "comprises one or more sets of pilot symbols" that are "transmitted on one set of subbands… in a given symbol period." *Id.*, ¶72; *see also id.,* ¶34 ("each subband is associated with a respective subcarrier upon which data may be modulated"). For instance, the set of pilot symbols of the steered reference pilot can be the "P OFDM symbol" that is also used for the MIMO pilot. *Id.*, ¶73. The subbands used for the P OFDM symbol is shown in Table 2 (represented as p(k)). *Id.*, ¶50. That is, Table 2 specifies an example set of subbands (*e.g.,* -26, -25, etc.), and thus subcarriers, onto which the steered reference pilot symbols are inserted. The steered reference pilot is thus inserted *onto a second plurality of subcarriers* associated with the set of subbands. *Id.*, ¶¶103, 238-240.

TABLE 2

Subband Index	Pilot Symbols: Beacon Pilot b(k)	Pilot Symbols: MIMO Pilot p(k)
...	0	0
−26	0	−1 − j
−25	0	−1 + j
−24	1 + j	−1 + j
−23	0	−1 + j
−22	0	1 − j
−21	0	1 − j
−20	−1 − j	1 + j
−19	0	−1 − j
−18	0	−1 + j
	...	

EX1006, Table 2 (excerpt, annotated).

204. The access point 110 also inserts *data* onto the *second plurality of subcarriers*. Ketchum explains that "48 subbands… may be used for data transmission." *Id.*, ¶35. As shown in Figure 2, Ketchum's downlink signal includes a "FCH [protocol data unit] PDU 232 a" that includes "a portion 236 a for a data packet." *Id.*, ¶101. A POSA would have understood that the FCH PDU 232 a includes data inserted on at least some of the 48 subbands that "may be used for data transmission." *Id.*, ¶¶35, 101.

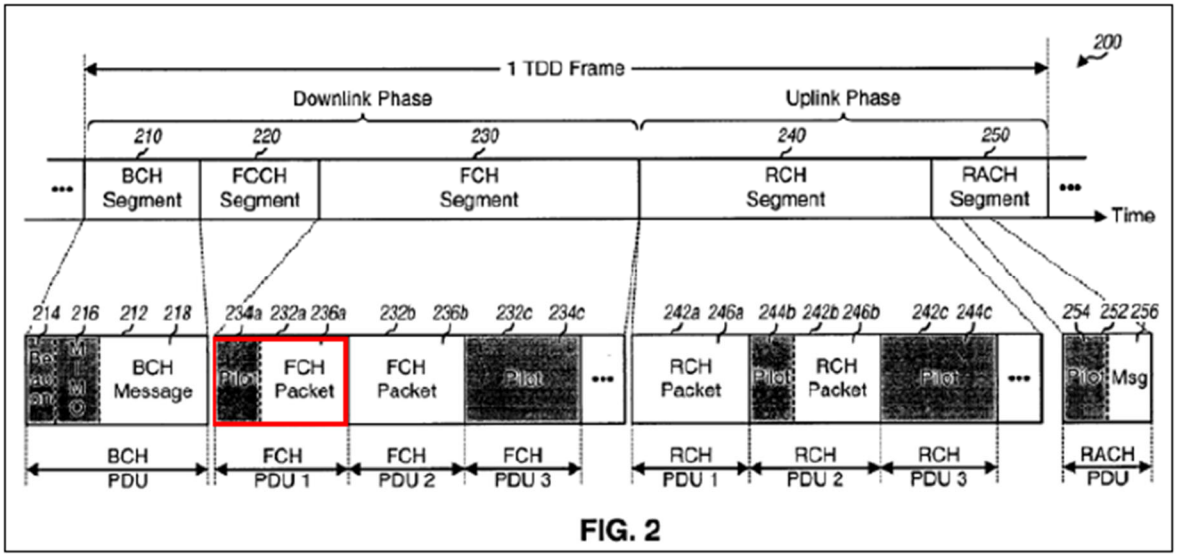

FIG. 2

EX1006, FIG. 2 (annotated).

205. As also shown in Figure 2, the FCH PDU 232 a also includes "a portion 234 a for a pilot." *Id.*, ¶101. The pilot is a steered reference pilot that, as explained, includes pilot symbols structured according to the P OFDM symbol (second pilots). *Id.*, ¶¶73, 103. Thus, the *second plurality of subcarriers* includes the subcarriers used for the FCH PDU 232a to transmit the steered reference pilot as well as the subcarriers used to transmit the data.

206. A POSA would have understood that these subcarriers are a *second plurality of subcarriers* relative to *the first plurality of subcarriers* used to transmit the beacon pilot. This is because, as explained for element [1.2], the *first plurality of subcarriers* comprises the subcarriers that implement beacon pilots (i.e., the B OFDM symbol (shown in Table 2 above)). As shown in Figure 2, beacon pilots are transmitted in symbol periods corresponding to transmission of a "BCH protocol

data unit (PDU) 212." *Id.*, ¶¶101, 103. Conversely, the *second plurality of subcarriers* comprises subcarriers that implement the steered reference pilots (i.e., the P OFDM symbol (shown in Table 2 above)), as well as the subcarriers used to transmit data. And as just explained, steered reference pilots and data are transmitted in symbol periods corresponding to transmission of "one or more FCH PDUs 232." *Id.*

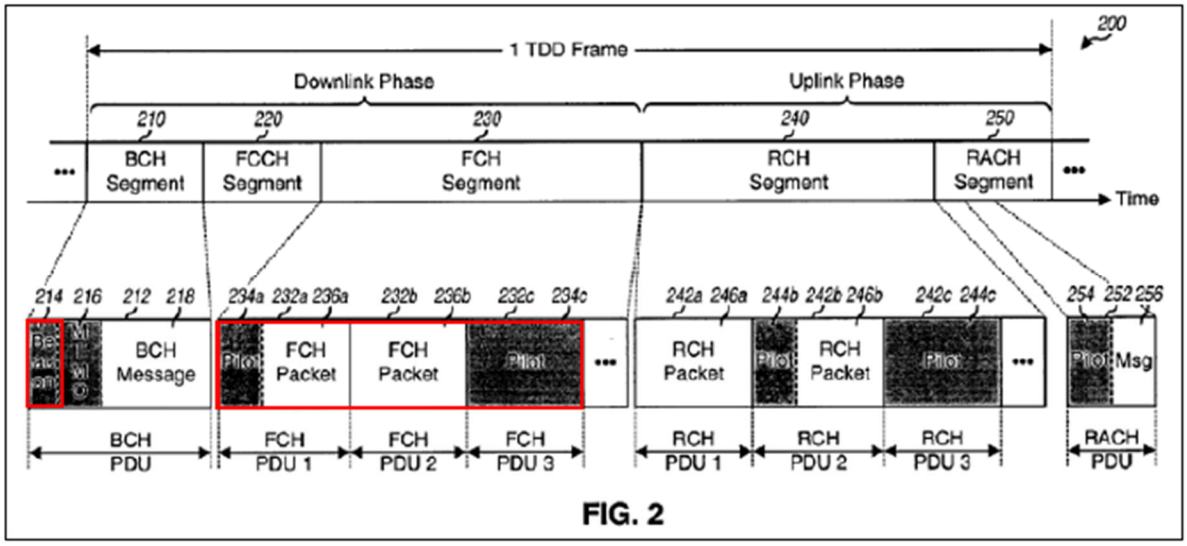

FIG. 2

EX1006, FIG. 2 (annotated).

207. Indeed, claim 1 enables the second plurality of subcarriers to overlap with the first plurality of subcarriers, so long as the collective pluralities are different. This is further shown by claim 2, which recites that "all subcarriers of the first plurality of subcarriers are different than all subcarriers of the second plurality of subcarriers." EX1001, 10:1-4 Thus, claim 1 does not require *all* subcarriers of

the first plurality of subcarriers to be different than *all* subcarriers of the second plurality of subcarriers.

5. [1.4] wherein at least some subcarriers of the first plurality of subcarriers or the second plurality of subcarriers are beam-formed; and

208. Ketchum discloses that its steered reference pilots are transmitted "using beam-forming." EX1006, ¶74; *see also id.,* ¶¶72, 147, 150, claim 61. As explained above for element [1.3], the steered reference pilots are the claimed *second pilots of a second type* that are inserted *onto a second plurality of subcarriers*. Thus, at least some of the second plurality of subcarriers are beam-formed.

6. [1.5] the plurality of antennas configured to transmit the first plurality of subcarriers and the second plurality of subcarriers in at least one of the time slots;

209. Ketchum discloses that its access point's antennas transmit the first and second plurality of subcarriers as part of the downlink signal that "spans a particular time duration." *Id.*, ¶100. The downlink signal includes multiple OFDM symbols, each carrying data and/or pilots on multiple subcarriers, and sent during respective OFDM symbol periods (i.e., *time slots*) within the "time duration." *Id.*, ¶¶36, 38, 72, 120; *see also* §VII.A. For instance, beacon pilots are transmitted on the first plurality of subcarriers during "N_B symbol periods designated for beacon pilot transmission," and steered reference pilots and data are transmitted on the

second plurality of subcarriers during certain "given symbol period[s]." *Id.*, ¶¶38, 154. The beacon pilots, steered reference pilots, and data (i.e., first and second pluralities of subcarriers) are transmitted from each of the base station's transmit antennas. *Id.*, ¶¶38, 154, 223. As shown in Figure 2, beacon pilots are transmitted in symbol periods corresponding to transmission of a "BCH protocol data unit (PDU) 212." *Id.*, ¶¶101, 103. Steered reference pilots and data are transmitted in symbol periods corresponding to transmission of "one or more FCH PDUs 232." *Id.*

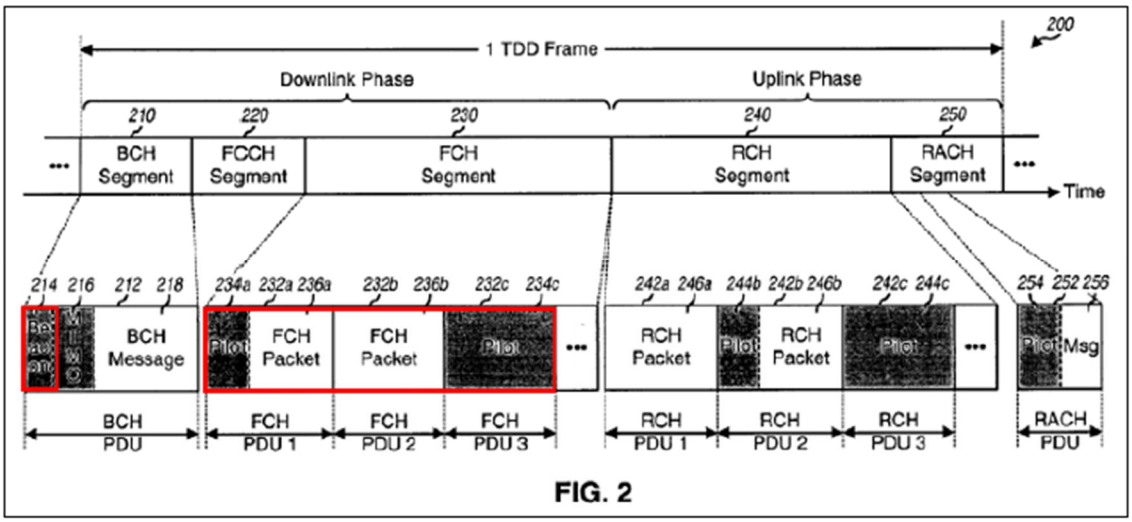

EX1006, FIG. 2 (annotated).

7. [1.6] wherein the second type is different than the first type and wherein the first pilots do not interfere with the second pilots.

210. As explained for elements [1.2]-[1.3], Ketchum's beacon pilots are the *first pilots of a first type* and the steered reference pilots are the *second pilots of a second type*. The beacon pilots and steered reference pilots "may be considered as

being of different types that are designed and used for different functions." *Id.*, ¶11.

TABLE 1

Pilot Types

Pilot Type	Description
Beacon Pilot	A pilot transmitted from all transmit antennas and used for timing and frequency acquisition.
MIMO Pilot	A pilot transmitted from all transmit antennas with different orthogonal codes and used for channel estimation.
Steered Reference or Steered Pilot	A pilot transmitted on specific eigenmodes of a MIMO channel for a specific user terminal and used for channel estimation and possibly rate control.
Carrier Pilot	A pilot used for phase tracking of a carrier signal.

EX1006, Table 1.

211. The beacon pilots do not interfere with the steered reference pilots because the beacon pilots are transmitted during different time periods than the steered reference pilots. *Id.,* ¶¶38, 154. As shown in Figure 2, beacon pilots are transmitted in symbol periods corresponding to transmission of a "BCH protocol data unit (PDU) 212." *Id.*, ¶¶101, 103. Steered reference pilots and data are transmitted in symbol periods corresponding to transmission of "one or more FCH PDUs 232." *Id.*

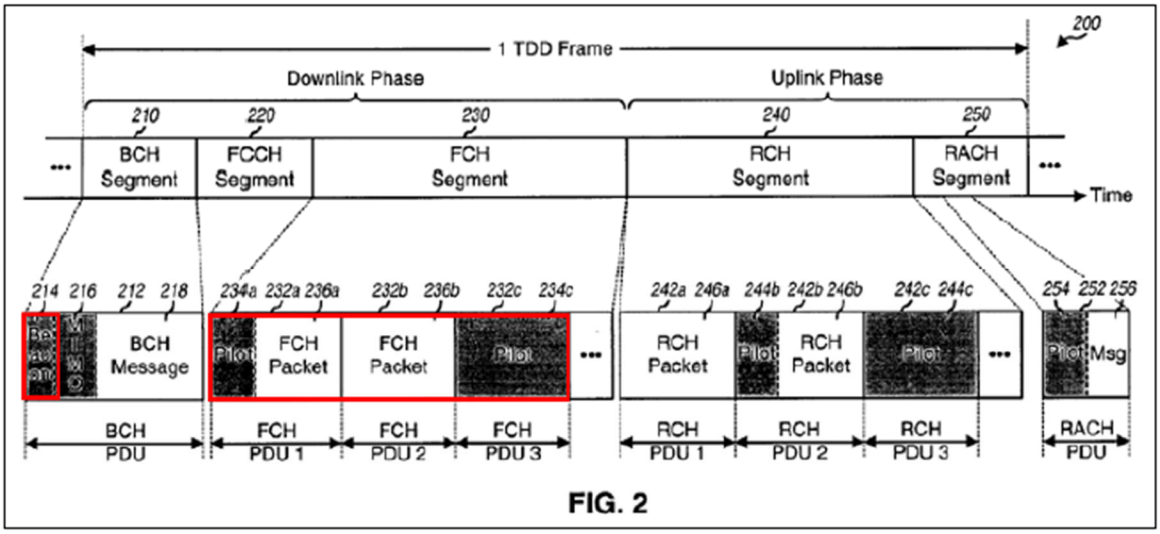

FIG. 2

EX1006, FIG. 2 (annotated).

C. Independent Claim 8

212. Ketchum or the combination of Ketchum and Li teaches independent claim 8 for the reasons provided below. A POSA would have been motivated to combine Ketchum and Li to arrive at claim 8 for the reasons provided in §XIII.A.

1. [8.P] A method performed by an orthogonal frequency division multiple access (OFDMA)-compatible base station that uses subcarriers in a frequency domain and time slots in a time domain, the method comprising:

213. To the extent limiting, Ketchum, alone or in combination with Li, teaches the preamble for the reasons provided for element [1.P]. Indeed, as explained for claim 1 and below for claim 8, Ketchum or Ketchum-Li's base station performs the claimed method.

2. [8.1] inserting, by the OFDMA-compatible base station, first pilots of a first type onto a first plurality of subcarriers, wherein the first pilots are cell-specific pilots;

214. Ketchum or the combination of Ketchum and Li teaches element [8.1] for the reasons provided for element [1.2].

3. [8.2] inserting, by the OFDMA-compatible base station, data and second pilots of a second type onto a second plurality of subcarriers;

215. Ketchum teaches element [8.2] for the reasons provided for element [1.3].

4. [8.3] wherein at least some subcarriers of the first plurality of subcarriers or the second plurality of subcarriers are beam-formed; and

216. Ketchum teaches element [8.3] for the reasons provided for element [1.4].

5. [8.4] transmitting, by the OFDMA-compatible base station, the first plurality of subcarriers and the second plurality of subcarriers in at least one of the time slots using a plurality of antennas;

217. Ketchum teaches element [8.4] for the reasons provided for element [1.5].

6. [8.5] wherein the second type is different than the first type and wherein the first pilots do not interfere with the second pilots.

218. Ketchum teaches element [8.5] for the reasons provided for element [1.6].

D. Independent Claim 15

219. Ketchum or the combination of Ketchum and Li teaches independent claim 15 for the reasons provided below. A POSA would have been motivated to combine Ketchum and Li to arrive at claim 15 for the reasons provided in §XIII.A.

1. [15.P] An orthogonal frequency division multiple access (OFDMA)-compatible mobile station that uses subcarriers in a frequency domain and time slots in a time domain, the OFDMA-compatible mobile station comprising:

220. To the extent limiting, Ketchum, or the combination of Ketchum and Li, teaches the preamble. Ketchum discloses a "multiple-access MIMO system 100 that supports multiple users." EX1006, ¶26. Ketchum's system 100 includes user terminals 120, also referred to as "mobile station[s]," dispersed throughout the system. *Id.*, ¶¶26-27. The mobile stations communicate using "orthogonal frequency division multiplexing (OFDM)." EX1006, ¶¶17, 33.

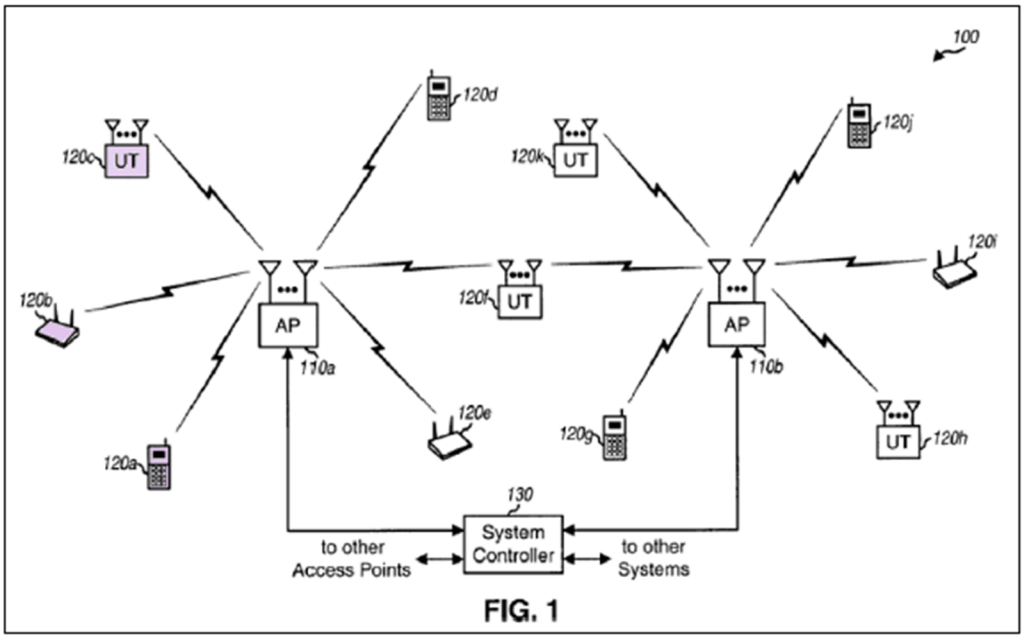

EX1006, FIG. 1 (annotated).

221. A POSA would have been motivated to implement Ketchum's system to communicate using OFDMA for the reasons provided for element [1.P]. *See also* §XIII.A. In such a system, Ketchum's mobile stations 120 (alone or as modified by Li) would be OFDMA-compatible.

2. [15.1] at least one antenna; and a receiver; and

222. Ketchum's mobile station 120 includes "antennas 452 a through 452 d." EX1006, ¶226. The mobile station also includes a receiver that includes demodulators 454, a receive (RX) spatial processor 460, an RX data processor 470, and a controller 480. *Id*. The antennas and receiver work together to receive and process the downlink signals transmitted by the access point 110. *Id.*

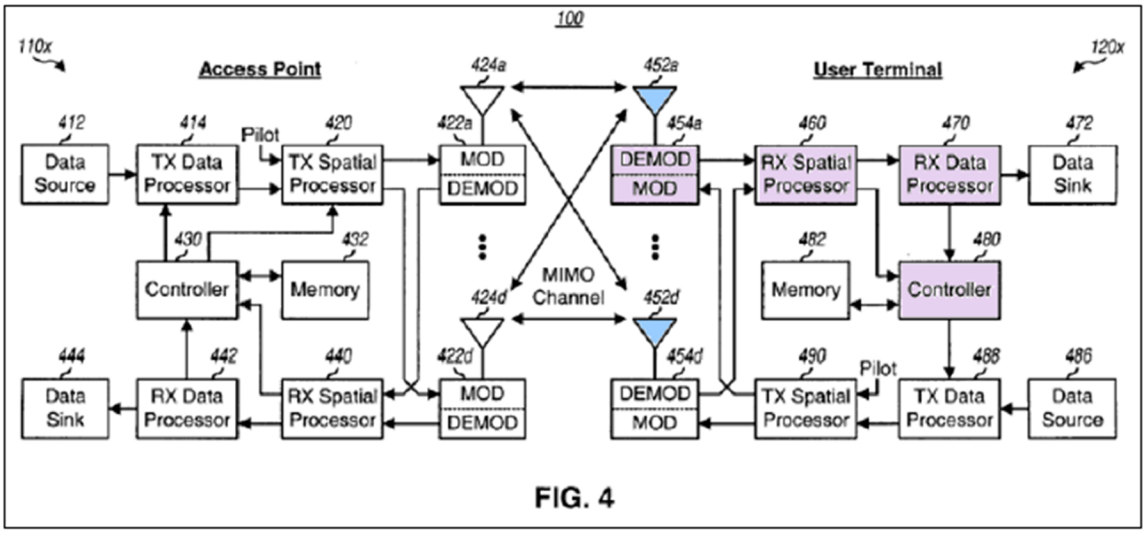

EX1006, FIG. 4 (annotated).

3. [15.2] the at least one antenna and the receiver are configured to: receive first pilots of a first type on a first plurality of subcarriers, wherein the first pilots are cell-specific pilots; and

223. Ketchum's antennas and receiver receive the OFDM downlink signal from the access point 110. *Id*. Ketchum's downlink signal, either alone or in combination with Li, includes *first pilots of a first type on a first plurality of subcarriers, wherein the first pilots are cell-specific pilots* for the reasons provided above for element [1.2]. A POSA would have understood that Ketchum's mobile station thus receives such *cell-specific pilots* on the *first plurality of subcarriers* via the antennas and receiver. *Id.*

4. [15.3] receive second pilots of a second type and data on a second plurality of subcarriers, wherein the first plurality of

subcarriers and the second plurality of subcarriers are received in at least one of the time slots;

224. Ketchum's at least one receive antenna and receiver receive the OFDM downlink signal. *Id.* The downlink signal includes *second pilots of a second type and data on a second plurality of subcarriers* for the reasons provided above for element [1.3]. A POSA would have understood that Ketchum's mobile station thus receives such *second pilots of a second type and data* on the *second plurality of subcarriers* via the antennas and receiver. *Id.* The *first plurality of subcarriers and the second plurality of subcarriers are received in at least one of the time slots* for the reasons provided above for elements [1.3]-[1.5].

5. [15.4] wherein at least some subcarriers of the first plurality of subcarriers or the second plurality of subcarriers are beam-formed; and

225. Ketchum discloses this element for the reasons provided above for element [1.4].

6. [15.5] the receiver is further configured to: recover the data using channel estimates from at least the second pilots; and

226. As explained for element [1.3], Ketchum's steered reference pilots are the claimed *second pilots*. The steered reference pilot is "used for channel estimation." *Id.*, Abstract, ¶¶12, 24, 30, 153, 190-191, 201-202. Ketchum's receiver then "recover[s] the transmitted data" based on the channel estimation. *Id.,* ¶¶7-8, 226 ("receive (RX) spatial processor 460 then performs spatial processing

on the received symbols from all demodulators 454 a through 454 d to provide recovered symbols, which are estimates of the modulation symbols transmitted by the access point").

7. [15.6] recover cell-specific information using the cell-specific pilots;

227. As explained for element [1.2], Ketchum's beacon pilots are the claimed *cell-specific pilots*. The mobile station 120 uses the beacon pilot to "acquire the [] frequency and timing" of the access point that transmitted the beacon pilot. *Id.*, ¶217; *see also id.,* ¶¶12, 31, 41, 119; EX1030, ¶1302. And as explained for element [1.2], the access point 110 (alone or as modified by Li) is associated with a particular coverage area/cell. In this manner, the mobile station *recovers cell-specific information* in the form of such frequency and timing of the access point (cell). For instance, the mobile station determines the "clock at the access point" using the beacon pilots, and locks its frequency to the clock. EX1006, ¶42.

8. [15.7] wherein the second type is different than the first type and wherein the first pilots do not interfere with the second pilots.

228. Ketchum discloses this element for the reasons provided for element [1.6].

E. Independent Claim 23

229. Ketchum or the combination of Ketchum and Li teaches independent claim 23 for the reasons provided below. A POSA would have been motivated to combine Ketchum and Li to arrive at claim 23 for the reasons provided in §XIII.A.

1. [23.P] A method performed by an orthogonal frequency division multiple access (OFDMA)-compatible mobile station that uses subcarriers in a frequency domain and time slots in a time domain, the method comprising:

230. To the extent limiting, Ketchum or the combination of Ketchum and Li discloses the preamble for the reasons provided for element [15.P].

2. [23.1] receiving first pilots of a first type on a first plurality of subcarriers, wherein the first pilots are cell-specific pilots;

231. Ketchum discloses, or the combination of Ketchum and Li renders obvious element [23.1] for the reasons provided for element [15.2].

3. [23.2] receiving second pilots of a second type and data on a second plurality of subcarriers, wherein the first plurality of subcarriers and the second plurality of subcarriers are received in at least one of the time slots;

232. Ketchum discloses element [23.2] for the reasons provided for [15.3].

4. [23.3] wherein at least some subcarriers of the first plurality of subcarriers or the second plurality of subcarriers are beam-formed;

233. Ketchum discloses element [23.3] for the reasons provided for element [15.4].

5. [23.4] recovering the data using channel estimates from at least the second pilots; and

234. Ketchum discloses element [23.4] for the reasons provided for element [15.5].

6. [23.5] recovering cell-specific information using the cell-specific pilots;

235. Ketchum discloses element [23.5] for the reasons provided for element [15.6].

7. [23.6] wherein the second type is different than the first type and wherein the first pilots do not interfere with the second pilots.

236. Ketchum discloses element [23.6] for the reasons provided for element [15.7].

F. Claims 3, 10, 17, and 25

237. Claims 3, 10, 17, and 25 recite "*wherein the second plurality of subcarriers includes an nth subcarrier and an n+18 subcarrier spaced apart from the nth subcarrier by 17 subcarriers and the first plurality of subcarriers includes an mth subcarrier and an m+20 subcarrier spaced apart from the mth subcarrier by 19 subcarriers*."

238. As explained for elements [1.2]-[1.3], Ketchum's beacon pilots (*first pilots*) are provided on a *first plurality of subcarriers* corresponding to a "B OFDM symbol," and Ketchum's steered reference pilots (*second pilots*) are provided on a

second plurality of subcarriers corresponding to a "P OFDM symbol" (which is the same symbol as used for the MIMO pilots). *Id.*, ¶¶39, 47, 73. The subbands/subcarriers of the B and P OFDM symbols are shown in Ketchum's Table 2, which is reproduced below. As shown, the P OFDM symbol (*second plurality of subcarriers*) includes an *nth subcarrier and an n+18 subcarrier spaced apart from the nth subcarrier by 17 subcarriers* (e.g., subbands/subcarriers -26 and -8). Also, the B OFDM symbol (*first plurality of subcarriers*) includes an *mth subcarrier and an m+20 subcarrier spaced apart from the mth subcarrier by 19 subcarriers* (e.g., subbands/subcarriers -24 and -4).

Ford Motor Co.
Exhibit 1035
Page 124

TABLE 2

First plurality of subcarriers (B OFDM Symbol)

Second plurality of subcarriers (P OFDM Symbol)

Subband Index	Pilot Symbols: Beacon Pilot b(k)	Pilot Symbols: MIMO Pilot p(k)
...	0	0
−26	0	−1 − j
−25	0	−1 + j
−24	1 + j	−1 + j
−23	0	−1 + j
−22	0	1 − j
−21	0	1 − j
−20	−1 − j	1 + j
−19	0	−1 − j
−18	0	−1 + j
−17	0	1 + j
−16	1 + j	−1 + j
−15	0	1 − j
−14	0	1 + j
−13	0	1 − j
−12	−1 − j	1 − j
−11	0	−1 − j
−10	0	−1 − j
−9	0	1 − j
−8	−1 − j	−1 − j
−7	0	1 + j
−6	0	−1 + j
−5	0	−1 − j
−4	1 + j	−1 + j
−3	0	−1 + j
	...	

mth subcarrier

19 subcarriers

m+20 subcarrier

nth subcarrier

17 subcarriers

n+18 subcarrier

EX1006, Table 2 (excerpt, annotated).

G. Claims 4, 11, 18, and 26

239. Claims 4, 11, 18, and 26 recite "*wherein each cell-specific pilot of the cell-specific pilots is unique to a respective cell*."

240. As explained for element [1.2], Ketchum's beacon pilots (*cell-specific pilots*) are used to "acquire the [] frequency and timing" of the access point that transmitted the beacon pilot. *Id.*, ¶217; *see also id.,* ¶¶12, 31, 41, 119; EX1030, ¶1302. For instance, Ketchum's user terminal uses the beacon pilots to determine and lock its frequency to "to the clock at the access point." EX1006, ¶42. As also

explained for element [1.2], the access points are associated with a particular coverage area/cell within which the access points broadcast. Thus, the beacon pilots are *unique to a respective cell*.

241. And as also explained for element [1.2], when combined with Li, Ketchum's access points would be associated with respective cells, as taught by the combination of Ketchum and Li. EX1007, ¶28; EX1006, ¶217. In the combined system, the beacon pilots would be "different for different cells" (i.e., *unique to a respective cell*). *Id.,* ¶28.

H. Claims 6, 13, 20, and 28

242. Claims 6, 13, 20, and 28 recite "*wherein the second plurality of subcarriers are beam-formed.*"

243. Ketchum discloses that its steered reference pilots are transmitted "using beam-forming." *Id.*, ¶74; *see also id.,* ¶¶72, 147, 150, claim 61. As explained above for element [1.3], the steered reference pilots are the claimed *second pilots of a second type* that are inserted *onto a second plurality of subcarriers*. Thus, the second plurality of subcarriers are beam-formed.

I. Claims 7 and 14

244. Claims 7 and 14 recite "*wherein the cell-specific pilots are used to convey cell-specific information*."

245. As explained for element [1.2], Ketchum's beacon pilots (*cell-specific pilots*) are used to "acquire the [] frequency and timing" of the access point that transmitted the beacon pilot. *Id.*, ¶217; *see also id.,* ¶¶12, 31, 41, 119; EX1030, ¶1302. For instance, Ketchum's user terminal uses the beacon pilots to determine and lock its frequency to "to the clock at the access point." EX1006, ¶42. As also explained for element [1.2], the access points are associated with a particular coverage area/cell within which the access points broadcast. Thus, the beacon pilots *convey cell-specific information* in the form of the frequency and timing information for the cell/access point.

246. And as also explained for element [1.2], when combined with Li, Ketchum's access points would be associated with respective cells, as taught by the combination of Ketchum and Li. EX1007, ¶28; EX1006, ¶217. In the combined system, the beacon pilots would *convey cell-specific information* in the form of the frequency and timing information for the cell/access point. EX1007, ¶28; EX1006, ¶42.

J. Claims 22 and 30

247. Claims 22 and 30 recite "*extract[ing] cell-specific information from the cell-specific pilots*."

248. As explained for element [1.2], Ketchum's beacon pilots (*cell-specific pilots*) are used to "acquire the [] frequency and timing" of the access point that

transmitted the beacon pilot. EX1006, ¶217; *see also id.,* ¶¶12, 31, 41, 119; EX1030, ¶1302. For instance, Ketchum's mobile station uses the beacon pilots to determine and lock its frequency to "to the clock at the access point." EX1006, ¶42. As also explained for element [1.2], the access points are associated with a particular coverage area/cell within which the access points broadcast. Thus, the mobile station extracts *cell-specific information* from the beacon pilots in the form of the frequency and timing information for the cell/access point.

249. And as also explained for element [1.2], when combined with Li, Ketchum's access points would be associated with respective cells, as taught by the combination of Ketchum and Li. EX1007, ¶28; EX1006, ¶217. In the combined system, Ketchum's mobile station would extract *cell-specific information* from the beacon pilots in the form of the frequency and timing information for the cell/access point. EX1007, ¶28; EX1006, ¶42.

XIV. GROUND 3: THE COMBINATION OF KETCHUM, LI, AND SMEE TEACHES CLAIMS 5, 12, 21, AND 29

250. It is my opinion that the combination of Ketchum, Li, and Smee teaches claims 5, 12, 21, and 29 for the reasons provided below.

251. Claims 5, 12, 21, and 29 recite "*wherein the first plurality of subcarriers are not aligned in frequency with subcarriers of at least another cell onto which respective cell-specific pilots are inserted.*"

252. As explained above for element [1.2], Ketchum-Li's beacon pilots are *cell-specific pilots* that are transmitted on a first plurality of subcarriers. EX1007, ¶28; EX1006, ¶¶39, 217; *see also* EX1030, ¶1302. But to the extent Ketchum-Li does not explicitly teach that the *first plurality of subcarriers are not aligned in frequency with subcarriers of at least another cell onto which respective cell-specific pilots are inserted*, Smee discloses this limitation.

253. Smee discloses "[p]ilot transmission schemes suitable for use in wireless multi-carrier (e.g., OFDM) communication systems." EX1017, Abstract. The pilot transmission schemes utilize "frequency orthogonality" by causing different base stations to transmit pilots "on disjoint sets of subbands" (subcarriers). *Id.*, ¶10; *see also id.,* ¶39. "Each cell or sector only transmits pilot on the subbands in the set assigned to that cell/sector." *Id.*, ¶46.

254. For instance, Smee's Table 2 shows an example subband set allocation for frequency orthogonality. *Id.*, ¶47. As can be seen, each "set" includes different subbands or subcarriers. Each set is assigned to a particular cell or cell sector for pilot transmission. *Id.*, ¶46.

TABLE 2	
Set	Subbands
1	10, 20, 30, . . . 500
2	11, 21, 31, . . . 501
3	12, 22, 32, . . . 502
4	13, 23, 33, . . . 503
5	14, 24, 34, . . . 504
6	15, 25, 35, . . . 505
7	16, 26, 36, . . . 506
8	17, 27, 37, . . . 507
9	18, 28, 38, . . . 508

EX1017, Table 2.

255. Each set is assigned to a particular cell or cell sector for pilot transmission. *Id*. Figure 3A shows an example assignment of subband sets to cluster of cells/cell sectors "to achieve frequency orthogonality" based on the subband sets of Table 2. *Id.*, ¶56. "Each of the 9 sectors in the cluster is assigned one of 9 subband sets" (*e.g.,* sets 1-9 as indicated in Table 2 and Figure 3A). *Id.* "Each sector would then transmit its pilot on only the subbands in its assigned set." *Id.*

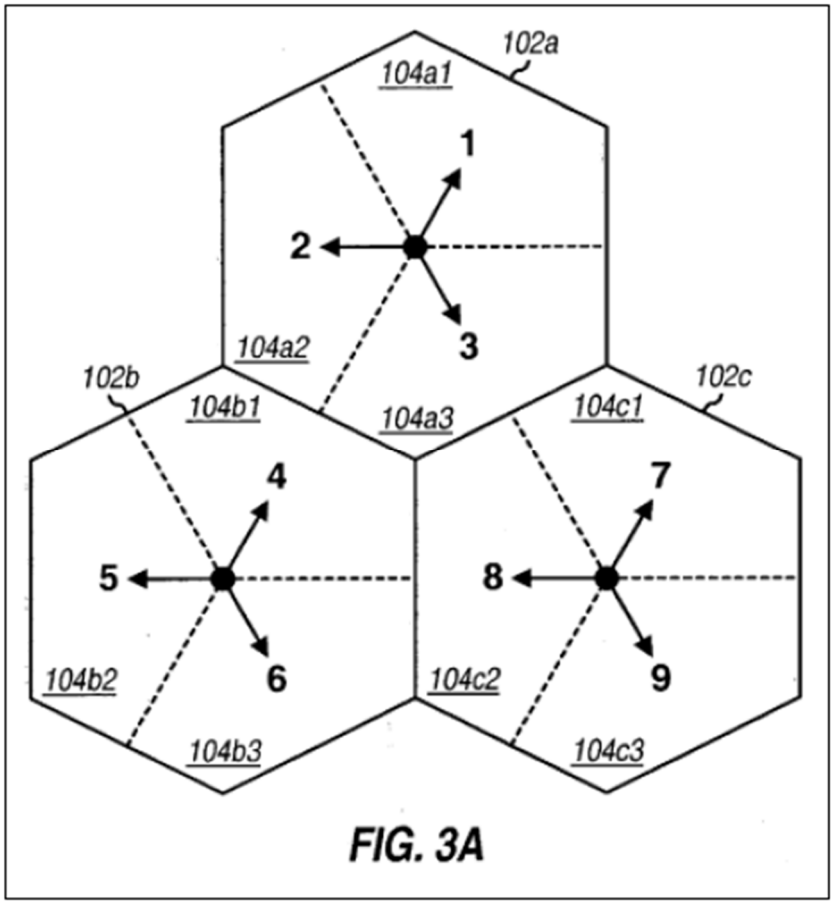

EX1017, FIG. 3A.

256. Thus, Smee teaches that each cell and cell sector transmits a first plurality of subcarriers [that] are not aligned in frequency with subcarriers of at least another cell onto which respective cell-specific pilots are inserted.

257. A POSA would have been motivated to implement the Ketchum-Li system so that a base station transmits beacon pilots (i.e., *cell-specific pilots*) on a first plurality of subcarriers that are not aligned in frequency with subcarriers of at least another cell onto which respective cell-specific pilots are inserted, as taught by Smee.

258. As explained for element [1.2], Ketchum's base stations transmit beacon pilots (*cell-specific pilots*) on certain subcarriers. Ketchum explains that downlink communication channels can experience "external interference." EX1006, ¶6. But although Ketchum discloses techniques for combating "inter-symbol interference" (*Id.*, ¶36) between different OFDM symbols transmitted by the base station (i.e., within the same cell) (*Id.*, ¶36), Ketchum does not explicitly disclose techniques for combating inter-cell interference between signals transmitted by adjacent base stations (cells). Thus, a POSA would have sought references for combating such inter-cell interference.

259. Smee is such a reference. Smee's "frequency orthogonality" techniques, described above, "may be used to avoid interference resulting from simultaneous transmission of pilots by multiple base stations." EX1017, ¶43. OFDM subcarriers do not experience subcarrier interference because the subcarriers are spaced orthogonally to each other. EX1008, 1:23-31. Thus, by causing adjacent cells to transmit pilots on "disjoint sets of subbands" (EX1017, ¶10), such inter-cell interference is avoided. EX1017, ¶43.

260. A POSA would have understood that Smee's frequency orthogonality techniques would achieve similar benefits in Ketchum-Li's system. A POSA would have thus been motivated to implement the Ketchum-Li system so that a first base station (cell) transmits beacon pilots (*cell-specific pilots*) on a first set of

subcarriers, and an adjacent base station (cell) transmits beacon pilots on a second set of subcarriers, as taught by Smee.

261. And a POSA would have had a reasonable expectation of success in implementing such techniques. Indeed, Ketchum discloses that the beacon pilots are provided on "12 specific subbands" out of "52 'usable' subbands." EX1006, ¶¶35, 39. Ketchum also discloses flexibility in determining which subbands are used for providing the beacon pilots. *E.g., id.*, ¶¶40-41 (describing an "exemplary embodiment" of an OFDM symbol in which beacon pilots are transmitted), ¶221 ("Various other pilot transmission schemes may also be implemented"). A POSA would have thus readily understood how to implement Ketchum's base stations so that adjacent base stations transmit beacon pilots on disjoint subbands or subcarriers. In this manner, a POSA would have understood that such implementation would merely amount to the use of a known technique (Smee's frequency orthogonality technique) to improve similar devices (Ketchum-Li and Smee's base stations) in the same way (avoiding interference from adjacent base stations/cells).

XV. CONCLUSION

In signing this declaration, I recognize that the declaration will be filed as evidence in a contested case before the Patent Trial and Appeal Board of the United States Patent and Trademark Office. I also recognize that I may be subject

to cross-examination in the case and that cross-examination will take place within the United States. If cross-examination is required of me, I will appear for cross-examination within the United States during the time allotted for cross-examination.

I hereby declare that all statements made herein of my own knowledge are true and that all statements made on information and belief are believed to be true; and further that these statements were made with the knowledge that willful false statements and the like so made are punishable by fine or imprisonment, or both, under Section 1001 of Title 18 of the United States Code.

Executed this 24th day of March, 2023.

Respectfully submitted,

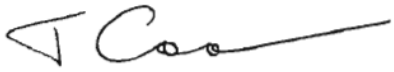

Dr. Todor Cooklev