UNITED STATES PATENT AND TRADEMARK OFFICE

BEFORE THE PATENT TRIAL AND APPEAL BOARD

FORD MOTOR COMPANY,
Petitioner,

v.

NEO WIRELESS, LLC,
Patent Owner.

Case IPR2023-00764
Patent 10,965,512 B2

PATENT OWNER'S PRELIMINARY RESPONSE

TABLE OF CONTENTS

Page

I. INTRODUCTION 1

II. THE PETITION FAILS TO ADDRESS INCONSISTENT DISTRICT COURT CLAIM CONSTRUCTION POSITIONS. 6

A. In The Co-Pending Court Proceedings, The Accused Infringers, Including Petitioner, Agreed To A Joint Construction Process. 7

B. Proposed Constructions. 8

III. PETITIONER FAILS TO SHOW GROUND 1 RENDERS THE CLAIMS OBVIOUS. 10

A. Petitioner Fails To Show Ground 1 Discloses "Cell-Specific Pilots." 11

B. Petitioner Fails To Show That At Least Some Of The Claimed Subcarriers Are "Beam-Formed." 19

IV. PETITIONER FAILS TO SHOW GROUND 2 RENDERS THE CLAIMS OBVIOUS. 25

A. Petitioner Fails To Show Ground 2 Discloses "Cell-Specific Pilots." 26

1. Petitioner Fails To Show That Ketchum Alone Discloses "Cell-Specific Pilots." 27

2. Petitioner Fails To Show That Combination Of Ketchum And Li Discloses "Cell-Specific Pilots." 31

B. Petitioner Fails To Show That The Plurality Of First And Second Claimed Subcarriers Are Both Transmitted "In At Least One Of The Time Slots." 36

V. CONCLUSION 47

TABLE OF AUTHORITIES

Page(s)

COURT DECISIONS

Comcast Cable Communs., LLC v. Promptu Sys. Corp.,
838 F. App'x 551 (Fed. Cir. 2021) 35

Dynamic Drinkware, LLC v. Nat'l Graphics, Inc.,
800 F.3d 1375 (Fed. Cir. 2015) 40

Innova/Pure Water, Inc. v. Safari Water Filtration Sys.,
381 F.3d 1111 (Fed. Cir. 2004) 30, 37

Kinetic Concepts, Inc. v. Smith & Nephew, Inc.,
688 F.3d 1342 (Fed. Cir. 2012) 32

In re Kotzab,
217 F.3d 1365 (Fed. Cir. 2000) 36

In re Magnum Oil Tools Int'l, Ltd.,
829 F.3d 1364 (Fed. Cir. 2016) 40

Medrad, Inc. v. MRI Devices Corp.,
401 F.3d 1313 (Fed. Cir. 2005) 37

Microsoft Corp. v. Enfish, LLC,
662 F. App'x 981 (Fed. Cir. 2016) 35

Northern Telecom Ltd. v. Samsung Elecs. Co.,
215 F.3d 1281 (Fed. Cir. 2000) 37

Polaris Indus., Inc. v. Arctic Cat, Inc.,
882 F.3d 1056 (Fed. Cir. 2018) 36

Suprema, Inc. v. ITC,
742 F.3d 1350 (Fed. Cir. 2013)
vacated, 796 F.3d 1338 (Fed. Cir 2015) (*en banc*),
and reinstated in pertinent part, 626 Fed. Appx. 273 (Fed. Cir. 2015) 31

Tech. Licensing Corp. v. Videotek, Inc.,
545 F.3d 1316 (Fed. Cir. 2008) 40

Vivid Techs., Inc. v. American Science & Eng'g, Inc.,
200 F.3d 795 (Fed. Cir. 1999) 9

AGENCY DECISIONS

Celltrion, Inc. v. Biogen, Inc.,
IPR2016-016141, Paper 65 (PTAB Feb. 21, 2018).....36

Cisco Sys., Inc. et al. v. Oyster Optics, LLC,
IPR2017-01719, Paper 31 (PTAB Jan. 24, 2019) 18, 38, 46

Facebook, Inc. v. Uniloc USA, Inc.,
IPR2017-01524, Paper 7 (Dec. 4, 2017).....40

Heart Failure Techs., LLC v. Cardiokinetix, Inc.,
IPR2013-00183, Paper 12 (Jul. 31, 2013) 35

Paypal, Inc. v. IOENGINE, LLC,
IPR2019-00906, Paper 16 (Oct. 29, 2019) 33

Samsung Elecs. Co. Ltd. v. KAIST IP US LLC,
IPR2017-01046, Paper 12 (Oct. 2, 2017) 24, 35

Samsung Elecs. Co. Ltd. v. KAIST IP US LLC,
IPR2017-01046, Paper 14 (Jan. 22, 2018).....24

William Wesley Carnes, Sr., Inc. v. Seabord Int'l Inc.,
IPR2019-00133, Paper 10 (May 8, 2019).....35

REGULATIONS

37 C.F.R. § 42.100(b) 6

37 C.F.R. §42.104 ..... 18, 39, 40, 46

EXHIBIT LIST	
2001	Declaration of William P. Alberth, Jr. [Alberth-Decl.]
2002	William P. Alberth, Jr. Curriculum Vitae [Alberth-CV]
2003	In re Neo Wireless, LLC Patent Litigation, 2:22-MD-03034-TGB, Joint Claim Construction Statement [Joint-CC-Statement]
2004	In re Neo Wireless, LLC Patent Litigation, 2:22-MD-03034-TGB, Exhibit A - Agreed Litigation Terms [Agreed-Lit.-Terms]
2005	In re Neo Wireless, LLC Patent Litigation, 2:22-MD-03034-TGB, Exhibit B - Disputed Litigation Terms [Disputed-Lit.-Terms]
2006	In re Neo Wireless, LLC Patent Litigation, 2:22-MD-03034-TGB, Notice of Stipulation Regarding Claim Construction [Stip-Re-CC]
2007	Reserved
2008	Reserved
2009	In re Neo Wireless, LLC Patent Litigation, 2:22-MD-03034-TGB, ECF No. 84 [Dkt. 84]
2010-2014	Reserved

This Petition is a copycat petition seeking joinder to a case in which institution has already been granted. Patent Owner notes for the panel's convenience that the non-institution arguments in this Preliminary Response essentially repeat the non-institution arguments that were raised in the already-instituted target case. The present Response is nonetheless being filed to protect Patent Owner's rights.

I. INTRODUCTION

The Petition should be denied because Petitioner fails to demonstrate a reasonable likelihood of prevailing as to any of the challenged claims.[1] The Petition challenges independent claims 1, 8, 15, 23 (as well as their dependent

[1] Because 37 C.F.R. § 315(c) requires institution of this inter partes review to occur before "the Director … may join as a party to that inter partes review any person who properly files a petition," this preliminary response is directed toward reasons for non-institution of this Petition, rather than the reasons for non-joinder if institution of this Petition were to be granted. Patent Owner notes that the pending joinder motion was previously addressed in Patent Owner's Response to Petitioner's Motion for Joinder. *See* Paper 7.

claims) (the "Claims") under two proposed grounds. Pet., 6.[2] The Petition filed in this joinder matter is accompanied by a motion for joinder to IPR2022-01539 regarding the same '512 patent, and is of the sort that has been called a "copycat" petition, for it is nearly identical to the Petition filed in IPR2022-01539. *See, e.g.*, *Best Med. Int'l, Inc. v. Elekta Inc.*, 46 F.4th 1346, 1350 (Fed. Cir. 2022) (discussing "copycat" IPR petition accompanied by motion for joinder). Petitioner explains that its filed Petition has the same arguments, alleges the same references for obviousness, challenges the exact same claims of the '512 patent, and challenges the '512 patent on the exact same grounds, as the petition in IPR2022-01539, which Petitioner in the present case seeks to join. The Petition further states that its expert, Mr. Todor Cooklev, has simply "adopt[ed] the opinions set forth in … the declaration of Dr. Paul Min submitted in IPR2022-01539, as his own." Pet. 2.

Patent Owner understands that the petition in IPR2022-01539 has already been granted over its POPR arguments. Patent Owner respectfully disagrees with the decision to institute, and respectfully continues to believe institution of this copycat petition should be denied. Because the grounds in this petition are the

[2] The Petition also presents a Ground 3, which exclusively challenges dependent claims and therefore is not addressed in this POPR. Pet., 78-83.

same as they are in Volkswagen's petition in IPR2022-01539 from which Petitioner copied, this Petition's grounds fail to support institution for the same reasons that the same grounds in IPR2022-01539 fail to do so.[3] For the panel's convenience in considering this response, Patent Owner notes that, much as the Petition in this case repeats the same grounds as those set forth in its joinder target, the present preliminary response repeats the same reasons and same supporting evidence set forth in Patent Owner's preliminary response in that case, and presents expert testimony and other evidence supporting its response that is the same as the evidence it presented in support of its preliminary response in that case. Because the Petition in the present case cites to Mr. Cooklev's testimony copied from Mr. Min's testimony in IPR2022-01539, rather than to Mr. Min's testimony directly, this preliminary response will as well. Finally, the difference

[3] For the purposes of this POPR, Patent Owner will discuss the relevant patentability arguments with regards to independent Claim 1. Independent Claims 8, 15 and 23 recite corresponding limitations, and said arguments equally apply to those claims. For, *e.g.*, the limitations addressed in this Response, the Petition treats the independent claims this way also: basing its arguments for independent Claims 8, 15 and 23 on its arguments for independent Claim 1. Pet., 38-46, §§ VIII.A.3.(b), (d) (cl. 8), 4. (e), (h) (cl. 15), 5.(b), (d) (cl. 23).

between that petitioner's and this petitioner's stance with respect to the proposed claim construction positions in the District Court proceeding between Patent Owner and the petitioners in these cases is addressed in Section II below.

Petitioner in Ground 1 relies on a combination of Kim and Tong to challenge the Claims. Pet., 6. Ground 1 fails for at least two independently sufficient reasons. First, as discussed in section III.A, *infra*, Petitioner fails to show that Ground 1 discloses "cell-specific pilots." Instead, Petitioner relies on Kim's cell-specific pilot *patterns*, where Kim transmits the same pilot(s) from all cells, but only changes the pattern of the subcarriers that are selected to transmit those same pilot(s) depending on the cell. However, both the claim language and the Patent's specification make expressly clear that cell-specific pilot *patterns* are prior art that the invention improves upon, and are quite distinct from the claimed invention.

Second, as discussed in section III.B, *infra*, Petitioner fails to show how and why a POSITA would have been motivated to modify its primary reference, Kim, to utilize beam-forming as disclosed by Tong. Tong teaches adaptive beam-forming, where a transmitter utilizes channel conditions determined by receiving feedback from the receiver to arrange which antennas and which layers should be beam-formed to the user. This is not feasible in Kim, because Kim's method, and its pilot signals relied upon by Petitioner, are exclusively utilized for initial synchronization and cell-search. There is no connection yet established with the

user to then provide feedback to the transmitter to set up the desired beam-forming. Petitioner fails to address any of the above aspects of its cited references.

Ground 2 similarly fails. Petitioner in its Ground 2 relies on a combination of Ketchum and Li to challenge the Claims, Pet., 6, but fails for at least two independently sufficient reasons. First, as discussed in section IV.A, *infra*, Petitioner fails to show disclosure of "cell-specific pilots." Petitioner first relies on Ketchum's beacon pilots for the disclosure of cell-specific pilots. Pet., 59. However, as discussed in section IV.A.1, Ketchum is expressly clear that its beacon pilots are not cell-specific, but are instead an identical universal set of pilots transmitted from each cell. Petitioner in the alternative proposes to import cell-specific pilots from Li into Ketchum. Pet., 61. But, as discussed in section IV.A.2, *infra*, Petitioner fails to show any reason why a POSITA would have found it obvious to utilize cell-specific pilots in a modified Ketchum. Petitioner admits that Ketchum is already a self-sufficient system that achieves all of its necessary functions with its own pilots. Petitioner fails to point to any deficiency in Ketchum, or any improvement or benefit that can be achieved in Ketchum through the use of cell-specific pilots. Petitioner's generic motivations to combine Ketchum and Li simply fail to connect any alleged motivation to why a POSITA would utilize cell-specific pilots in Ketchum.

Ground 2 additionally fails to disclose or render obvious the limitation that "the plurality of antennas [are] configured to transmit the first plurality of subcarriers and the second plurality of subcarriers in at least one of the time slots." Ex. 1001 ['512 Patent] cl. 1. As discussed in section IV.B, *infra*, the POSITA would understand this limitation to require that there must be at least one time slot that contains both "the first plurality of subcarriers ***and*** the second plurality of subcarriers."[4] Petitioner, which had the burden to explain how the claims must be construed, appears to apply this understanding of the claims, but fails to show its disclosure in the Petition's Ground 2.

For all of the foregoing reasons, and as discussed in more detail in this POPR, the Petition should be denied.

II. THE PETITION FAILS TO ADDRESS INCONSISTENT DISTRICT COURT CLAIM CONSTRUCTION POSITIONS.

The Consolidated Trial Practice Guide (at 46-48) notes that in construing the claims "the Board may take into consideration statements made by a patent owner or petitioner about claim scope," and that claim construction developments in district court may be taken into account in this proceeding when made of record by the parties. *Cf.* 37 C.F.R. § 42.100(b) ("Any prior claim construction determination concerning a term of the claim in a civil action . . . that is timely

[4] All emphasis in this brief is added unless otherwise stated.

made of record in the *inter partes* review proceeding will be considered.”). Below, Patent Owner submits the claim construction positions regarding the patent-at-issue taken in briefing by the parties in the district court proceedings co-pending with this proceeding.

As noted in the Petition and the parties’ mandatory notices, prior to the filing of the Petition, Patent Owner initiated district court proceedings enforcing the patent-at-issue against several alleged infringers, including Petitioner. Since the Petition in this case was filed, the parties to those court proceedings have filed joint claim construction briefs taking positions as to the construction of the claims-at-issue here.

A. In The Co-Pending Court Proceedings, The Accused Infringers, Including Petitioner, Agreed To A Joint Construction Process.

In the pending district court proceedings, all parties “jointly” agreed to a joint process in which Patent Owner, on the one hand, and the accused infringers, on the other hand, would confer on which claim terms have no dispute as to claim construction and what the sides’ respective positions as to how the claims should be construed, and all defendants agreed to “jointly submit to” Patent Owner by December 15, 2022, “for each disputed claim term,” “their proposed interpretations” for “each disputed claim term.” Ex. 2009 [Dkt. 84] 21-22. Petitioner, together with the other Defendants, exchanged multiple rounds of claim construction positions with Patent Owner, and the two sides arrived at a list of

agreed-upon claim constructions and a list of claim construction disputes. The Petitioner in the present case (unlike the petitioner in the case this Petitioner seeks to join) has not attempted to dissociate itself from this jointly proposed defendant proposal on claim construction. *Compare* IPR2022-1539, POPR, Section II.

The accused infringers, with the exception of Volkswagen Group of America, Inc. and Volkswagen Group of America Chattanooga Operations, LLC which tried to hold themselves separate from the agreed upon claim constructions at the last minute (see *supra*), assert in open court that these are the correct constructions of these terms of the patent's claims-at-issue.

B. Proposed Constructions.

The claim construction positions submitted to the district court by the parties in those proceedings since the Petition was filed are attached as Exhibits 2004 [Agreed-Lit.-Terms] and 2005 [Disputed-Lit.-Terms]. *See also* Exhibit 2003 [Joint-CC-Statement]. With respect to the '512 patent, the parties dispute the following phrases:

Claim Language	Proposed Construction of Plaintiff (Patent Owner)	Proposed Construction of Defendants
"wherein the first plurality of subcarriers and the second plurality of subcarriers are received in at least one of the time slots"	"wherein the first plurality of subcarriers and the second plurality of subcarriers are received in at least one of the same time slots"	Plain and ordinary meaning.

Claim Language	Proposed Construction of Plaintiff (Patent Owner)	Proposed Construction of Defendants
"second pilots of a second type"	Plain and ordinary meaning. No construction necessary.	"pilots possessing a set of characteristics common to all base stations of the system"

Ex. 2005 [Disputed-Lit.-Terms] 7.

Patent Owner's position as to these terms is consistent with its position in this proceeding. As to "second pilots of a second type," Patent Owner's position is that the claim term should be given its plain and ordinary meaning. *See id.*, 7. As to the remaining term, "wherein the first plurality of subcarriers and the second plurality of subcarriers are received in at least one of the time slots," Patent Owner's arguments are consistent with its proposed construction. *See* Section IV.B, *infra*. Given that Petitioner has chosen not to express any claim construction analysis in this IPR and has, instead, opted to implicitly apply the same understanding of the claims as the Patent Owner, it has waived any contrary claim construction position in this litigation. Therefore, the Board does not need to construe this limitation in this IPR. *See Vivid Techs., Inc. v. American Science & Eng'g, Inc.*, 200 F.3d 795, 803 (Fed. Cir. 1999) ("only those terms need be construed that are in controversy, and only to the extent necessary to resolve the controversy").

III. PETITIONER FAILS TO SHOW GROUND 1 RENDERS THE CLAIMS OBVIOUS.

Petitioner in its Ground 1 relies on a combination of Kim and Tong to challenge the Claims. Pet., 6. Ground 1 fails for at least two independently sufficient reasons. First, as discussed in section III.A, *infra*, Petitioner fails to show that Ground 1 discloses "cell-specific pilots." Instead, Petitioner relies on Kim's cell-specific pilot ***patterns***, where Kim sends the ***same*** pilot(s) from all the cells, but varies the subcarriers that transmit those same pilots depending on the specific cell. However, both the claim language and the Patent's specification make expressly clear that cell-specific pilot ***patterns*** like those argued to be disclosed here are distinct from the claimed invention requiring cell-specific pilots.

Second, as discussed in section III.B, *infra*, Petitioner fails to show how and why a POSITA would have been motivated to modify its primary reference, Kim, to implement beam-forming as disclosed by Tong. Tong teaches adaptive beam-forming, where a transmitter utilizes channel conditions determined by receiving feedback from the receiver to arrange which antennas and which layers should be beam-formed to the user. This is not feasible in Kim, because Kim's method, and its pilot signals relied upon by Petitioner, are exclusively utilized for initial synchronization and cell-search. At that time, there was no connection yet established with the user to then provide feedback to the transmitter to set up the

desired beam-forming. Petitioner fails to address any of the above aspects of its cited references.

For all of the foregoing reasons, as explained in more detail in the sections below, Petitioner's Ground 1 fails.

A. Petitioner Fails To Show Ground 1 Discloses "Cell-Specific Pilots."

The Claims recite a transmitter that is configured to "insert first pilots of a first type onto a first plurality of subcarriers, wherein the first pilots are cell-specific pilots." Ex. 1001 ['512 Patent] cl. 1. Petitioner relies on Kim's pilot *patterns* for the disclosure of the "first type" of pilots that are "cell-specific." Pet., 26 ("The pilots include a first pilot *pattern* in common for each cell and a second pilot pattern that is 'different for each cell.'"). As discussed below, Kim discloses that the ***same*** pilot(s) are transmitted from each cell, and only the ***pattern*** of which subcarriers are selected to transmit those same pilot(s) are modified depending on the cell. The Patent's specification and claim language both make clear that cell-specific pilot patterns, as opposed to cell-specific pilots, fail to disclose this limitation. Ex. 2001 [Alberth-Decl.] ¶ 33.

The Patent's specification explains that transmitting cell-specific pilot *patterns* is prior art that is distinct from, and improved upon by, the claimed invention because this previous art fails to solve the problem of interference:

> ***One approach to deal with the interference problem has been*** to have each cell ***transmit a particular pattern of pilot*** subcarriers based on a certain type of cell-dependent random process. This approach, to a certain degree, has mitigated the impact of the mutual interference between the pilot subcarriers from adjacent cells; ***however, it has not provided for a careful and systematic consideration of the unique requirements of the pilot subcarriers.***

Ex. 1001 ['512 Patent] 1:62-2:2; *see also* Ex. 2001 [Alberth-Decl.] ¶ 34.

The Patent's embodiments further confirm that the invention recited in the challenged claims relates to cell-specific pilots, not pilot patterns. For example, the Patent explains that a receiver within the zone of the pth cell in a network arrangement of m cells receives a signal on subcarrier (i) at time (t_k) that is of the general form:

$$s_i(t_k) = a_{i,p}(t_k)e^{j\varphi_{i,p}(t_k)} + \sum_{\substack{m=1 \\ m \neq p}}^{M} a_{i,m}(t_k)e^{j\varphi_{i,m}(t_k)}$$

where "$a_{i,m}(t_k)$ and $\varphi_{i,m}(t_k)$ denote the signal amplitude and phase, respectively, associated with the i_{th} subcarrier from the base station of the m_{th} cell." Ex. 1001

['512 Patent] 5:1-15; *see also* Ex. 2001 [Alberth-Decl.] ¶ 35. As Patent Owner's expert, Mr. Alberth, explains:[5]

> This equation shows that a receiver within the zone of cell p receives a signal that comprises two parts: a first part that has the unique amplitude and phase of cell p, and a second part that is the sum of signals from other cells m with their unique amplitudes and phases. When the signal being transmitted by the pth cell is a cell-specific pilot, the cell-specific information used by the receiver is carried by the amplitude and phase, $a_{i,p}(t_k)$ and $\varphi_{i,p}(t_k)$, "and other signals described by the second term on the right hand side of equation (1) [above] will be interference." Ex. 1001 ['512 Patent] 5:17-22; *see also id*., 4:8-11 ("Pilot subcarriers, whose phases and amplitudes are predetermined and made known to all receivers and which are used for assisting system functions such as estimation of system parameters"). Thus, the embodiments further make clear that the invention's "cell-specific pilots" have cell-specific amplitude and/or phases carrying cell specific information, and are distinct from cell-

[5] Mr. Alberth has over 25 years of experience in design, development, implementation, and manufacturing of mobile phones, including serving as Motorola's Chief Technology Officer for Motorola Mobile Devices, where he led the development of differentiating technology that was integrated into Motorola's commercial mobile telephone products. Ex. 2001 [Alberth-Decl.] ¶ 6. He is also a named inventor on over 100 patents. *Id*., ¶ 9; *see also* Ex. 2002 [Alberth-CV].

> specific pilot *patterns*, which represent transmitting the same pilot symbol(s) but only varying the pattern of which subcarriers are selected to transmit them.

Ex. 2001 [Alberth-Decl.] ¶ 36.

The distinction between cell-specific pilots and cell-specific pilot *patterns* is also reflected in the claim language:

> The Claims' plain and ordinary meaning requires that the "pilots" be cell-specific, ***not*** that the pattern by which the pilots are placed be "cell-specific." Ex. 1001 ['512 Patent] cl. 1 ("wherein ***the first pilots*** are cell-specific pilots"). This is even more apparent because the Claims specifically recite a limitation regarding placement of pilots by reciting "insert[ing]" the pilots "onto a first plurality of subcarriers." *Id*. Yet, even though the Claims recite both pilots and placement of pilots, they deliberately recite only that the "pilots" are cell-specific, ***not*** that the ***pattern*** of insertion of the pilots is cell-specific. *Id*. In contrast, a cell-specific pilot pattern would, at best, relate to cell-specific selection of the "plurality of subcarriers" upon which the pilots are placed.

Ex. 2001 [Alberth-Decl.] ¶ 37.

Even though both the claim language and the Patent's specification are clear that the Claims require cell-specific pilots, not cell-specific pilot patterns, Petitioner's Ground 1 expressly and exclusively relies on the disclosure of cell-specific pilot ***patterns*** for the disclosure of this limitation. Pet., 26 ("The pilots

include … a second ***pilot pattern*** that is different for each cell"); 26 ("Each Q_2 pattern is a ***specific pattern for each cell***"); 26 ("Figure 10, reproduced and annotated below, shows three example ***pilot patterns***"); 27 ("The symbols of each ***pilot pattern*** are inserted onto different subcarriers"); 27 ("As Mr. McNair explains, patterns 1 and Q-1 represent different ***pilot patterns*** that are each specific to the particular cell"); 28 ("Thus, the Q_2 (residual) ***cell-specific pilot patterns*** are inserted onto a first plurality of subcarriers") (internal quotations and citations omitted).

The reason that Petitioner only relies on the disclosure of cell-specific pilot ***patterns*** in Kim is because Kim does not disclose cell-specific pilots. Instead, Kim discloses transmitting the ***same*** pilots, which are not cell-specific, from different cells using different patterns of subcarriers to transmit the same pilots depending on the cell. *See infra*. Kim discusses, for example, characteristics of pilot symbols (*e.g.*, interval), but teaches the use of cell-specific pilot ***patterns***, not cell-specific pilots, to identify each cell:

> Fig. 9 shows a case when the number of total subcarriers is N, a subcarrier interval of a pilot symbol is N_f, and a time interval of the pilot symbol is N_t. In this instance, the number of pilot symbols each of which is inserted for each group of N_f subcarriers at the s_1^{th} symbol 910, and ***the pilot symbols respectively have a pattern*** $p_{s1,c}^{(i)}$ where c is a cell number, i is the ith pilot subcarrier in the s_1^{th} OFDM symbol, and ***the pattern*** $\boldsymbol{p_{s1,c}^{(i)}}$ ***can be varied according to c and s.*** Therefore,

> the slot synchronization and the frame synchronization are estimated and the cells are searched by using ***a specific pilot pattern for each cell*** and finding a cross correlation on the available pattern.

Ex. 1004 [Kim] 24:2-11; *see also* Ex. 2001 [Alberth-Decl.] ¶¶ 38-39.

As Mr. Alberth explains:

> Kim consistently discloses only cell-specific pilot ***patterns***, and not cell-specific pilots. *See, e.g.*, Ex. 1004 [Kim] 3:22-23 ("the second preamble may have specific ***patterns*** for a plurality of cells for the purpose of cell search"); 4:9-10 (similar); 5:6-7 (similar); 6:3-4 (similar); 4:20-21 ("a cell searcher for using a ***pattern*** specific to each cell"); 7:8-10 ("a ***pilot pattern*** of the pilot symbol in the second slot includes a first pattern in common for each cell and a second ***pattern*** different for each cell"); 21:22-22:1 ("specific ***patterns*** for respective cells"); 24:10 ("using a specific ***pilot pattern*** for each cell"); 24:16 ("a specific ***pilot pattern*** is allocated to each cell").
>
> Other disclosures in Kim are also consistent with a POSITA's understanding that the ***same*** pilot(s) are transmitted from different cells, and only the pattern of transmission of those same pilots are varied depending on the cell. *See, e.g.*, Ex. 1004 [Kim] 36:19 ("a specific pattern for each cell of ***the*** pilot is used"); 38:12 (same); 62:16-17 ("using a specific pattern for each cell of ***the*** pilot symbol").
>
> That Kim utilizes the same pilot(s) for all cells is even more clear in its embodiments. For example, Kim explains that each cell C_1, C_2 in an exemplary embodiment has four antennas. Ex. 1004 [Kim] 31:10-16. Each antenna (not each cell) has an antenna-specific pilot symbol,

AP_0, AP_1, AP_2, AP_3. *Id.*; *see also id.*, 31:3-4 ("A pilot symbol AP_0 of the antenna 0 and a pilot symbol AP_1 of the antenna 1 are respectively inserted …."). Thus, each cell has an ***identical*** set of pilot symbols, each corresponding to one of the four antennas in the cell: AP_0, AP_1, AP_2, AP_3. The ***pattern*** of this identical set of pilot symbols is then modified depending on each cell, making the pilot ***patterns*** cell-specific. *Id.*, 31:13-16 ("the ***patterns*** for changing the positions of the pilot symbols AP_0, AP_1, AP_2, and AP_3 according to the respective antennas are ***differently allocated for the respective cells C_1 and C_2.***").

This is further shown in Kim's annotated Fig. 14, where the same pilots AP_0, AP_1, AP_2, and AP_3 are transmitted from each cell, C_1 (red) and C_2 (blue), but the pattern of transmission is different for each cell:

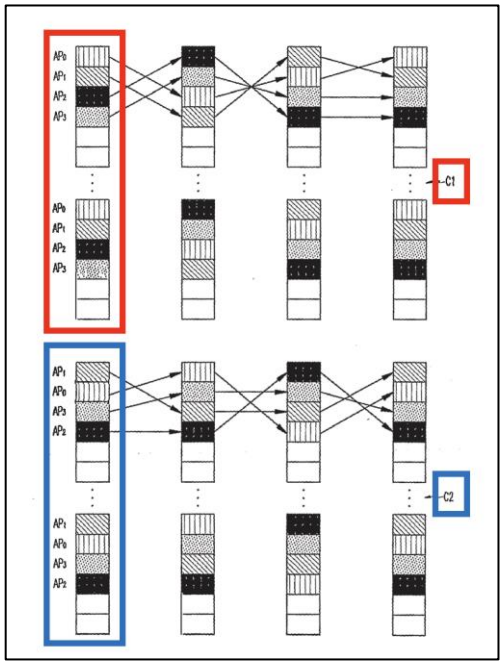

Ex. 2001 [Alberth-Decl.] ¶¶ 40-43.

Thus, unlike the ’512 Patent’s Claims which require cell-specific pilots, which the exemplary embodiments achieve by varying pilot signal amplitude and phase according to the cell specific information, Ex. 1001 [’512 Patent] 5:5-15, Kim opts to transmit the same pilots but vary the pattern of the subcarriers selected to transmit those same pilots to obtain cell specific pilot patterns. Ex. 2001 [Alberth-Decl.] ¶ 44.

Despite having the burden to prove its theory of alleged unpatentability, Petitioner does not acknowledge, let alone address, the fact that cell-specific pilot *patterns* do not disclose the claimed cell-specific pilots, even though both the claim language and the Patent specification make clear that the Claims require cell-specific pilots, not pilot *patterns*. 37 C.F.R. §42.104 (b)(3) (Petitioner has the burden to show “[h]ow the challenged claim is to be construed.”); *Cisco Sys., Inc. et al. v. Oyster Optics, LLC*, IPR2017-01719, Paper 31, 23-25 (PTAB Jan. 24, 2019) (rejecting obviousness grounds) (“Petitioner should have provided its claim construction and corresponding explanation as to why [its reference] satisfies the limitation in the Petition”).

For all of the foregoing reasons, Petitioner fails to show that its Ground 1 discloses the claimed “cell-specific pilots.”

B. Petitioner Fails To Show That At Least Some Of The Claimed Subcarriers Are "Beam-Formed."

The Claims require that "at least some subcarriers of the first plurality of subcarriers or the second plurality of subcarriers are beam-formed." Ex. 1001 ['512 Patent] cl. 1; Ex. 2001 [Alberth-Decl.] ¶ 46.

To allege disclosure of this limitation, Petitioner relies on importing beam-forming from Tong into Kim to beam-form its Q_1 and Q_2 pilot patterns, arguing:

> Kim's base-station inserts the Q_1 and Q_2 pilot patterns onto the first and second pluralities of subcarriers. However, Kim does not expressly disclose that at least some of these subcarriers are *beam-formed*. But Tong discloses this limitation.

Pet., 33. However, as discussed below, Kim's algorithms, including its Q_1 and Q_2 pilot patterns, are for initial cell search and synchronization, which ***cannot*** be found to utilize adaptive beam-forming as taught in Tong—because the transmitter does not yet have an established connection with a known user to receive the necessary feedback such that it can then beam-form multiple antennas for that user. Ex. 2001 [Alberth-Decl.] ¶¶ 47-48.

Tong defines beam-forming as a process where "a spare transmit antenna" is used to redundantly transmit data that is also being transmitted via another antenna in order to increase the quality of the signal received by the user:

> In essence, a spare transmit antenna is used to redundantly transmit data being transmitted over another of the transmit antennas in a

> manner wherein the primary layer information transmitted from a first transmit antennas is effectively combined in the channel with the redundantly transmitted information from the spare transmit antennas to effectively reinforce transmission of a given layer. The data transmitted from the spare antenna is weighted to achieve a desired gain.

Ex. 1005 [Tong] 8:53-61; Ex. 2001 [Alberth-Decl.] ¶ 49.

Tong discloses a system that implements adaptive beam-forming, where it uses the determined channel conditions between the transmitter and receiver to determine which signals should be beam-formed and which antennas should be used to beam-form those selected signals. Ex. 2001 [Alberth-Decl.] ¶ 50; *see also id*., ("A 'channel' is a specific pathway between the transmitter and a receiver"); Ex. 1005 [Tong] 8:56-57 ("a first transmit antenna is effectively combined ***in the channel*** with the redundantly transmitted information"). Specifically, Tong teaches that "importantly, the channel conditions are used" to arrange the desired beam-forming:

> ***Importantly***, ***the channel conditions are used to determine the transmit antennas from which the various layers should be transmitted***, as well as identifying the redundant transmit antennas through which beam-forming is provided. Additionally, the channel conditions will also be used to determine the respective weighting factors for the beam-forming layers as well as any weighting factor, if necessary or desired, for the primary layer.

Ex. 1005 [Tong] 13:60-67. Tong teaches that an OFDM system implementing its beam-forming would operate the same way. *Id*., 14:58-15:2 (explaining that an OFDM system with beam-forming would operate "as described above."); *see also* Ex. 2001 [Alberth-Decl.] ¶ 51.

As Mr. Alberth further explains:

> Channel characteristics cannot generally be known unless and until there is an established channel between the transmitter and the receiver, and the receiver provides feedback to the transmitter to enable channel estimation. For example, Tong explains that "channel estimates for each of the channels may simply be determined at the user element 16 and transmitted to the base station 14." Ex. 1005 [Tong] 14:5-7. Alternatively, Tong explains that a receiver may have knowledge of the base configuration, and itself utilize the channel estimation information to configure beam-forming at the transmitter. *Id*., 14:9-14. In either case, Tong is clear that receiver feedback based on channel conditions is a necessity for its beam-forming embodiments. *See also* Ex. 1005 [Tong] 8:56-57 ("a first transmit antenna is effectively combined ***in the channel*** with the redundantly transmitted information").

Ex. 2001 [Alberth Decl.] ¶ 52.

Tong's adaptive beam-forming is not feasible for Kim's Q_1 or Q_2 pilots. Pet., 33 (arguing for beam-forming at least some of the subcarriers transmitting the Q_1 and Q_2 pilot patterns). As Mr. Alberth further explains:

As I will explain below, in Kim, because its pilot signals Q_1 and Q_2 (and the overall method) are exclusively directed at initial synchronization and cell-search, there is not yet a channel established and no feedback is provided from the receiver. Thus, adaptive beam-forming as disclosed in Tong is not feasible for these signals.

Kim's algorithm and pilots are exclusively for initial synchronization and cell-search. Kim explains that "[i]n general, a terminal is required to read signals of a base station and synchronize its time and frequency with the terminal ***for initial synchronization***, ***and search cells*** in a cellular system." Ex. 1004 [Kim] 1:23-25. Kim then discloses a system that it states "provide[s] a structure of a preamble and a pilot for synchronizing downlinks and searching cells with a lesser amount of calculation in the OFDMA-based cellular system." *Id*., 3:12-14.

Kim's embodiments, accordingly, disclose methods for initial synchronization and cell search. *See, e.g., id*., 12:11-13 ("Referring to FIGs. 2A to 10, a synchronization and cell search method according to the first preferred embodiment of the present invention will be described"); 14:5-8 ("Referring to FIG. 3, a method for estimating synchronization of an initial symbol in the synchronization and cell search method according to the first preferred embodiment will be described in detail").

Kim further discloses that it utilizes its pilot patterns Q_1 and Q_2 for the same initial synchronization and cell search. Specifically, Kim discusses (and the Petition cites) its Q_1 and Q_2 pilot patterns in connection with its Fig 10. Ex. 1004 [Kim] 24:20-25:5; Pet., 26-27.

Kim explains that its discussion of Fig. 10, like its other discussions, is in connection with initial search and synchronization. *See*, e.g., Ex. 1004 [Kim] 12:11-13 ("Referring to FIGs. 2A to 10, a synchronization and cell search method according to the first preferred embodiment of the present invention will be described"); 25:3-5 ("Accordingly, the slot synchronization is found with a lesser amount of calculation by using the Q_1 common patterns, and the cells are searched by using the residual Q_2 patterns or a preamble").

Similarly, in its second embodiment in Figs. 11A and 11B, Kim further explains how the pilot patterns Q_1 and Q_2 are utilized for initial cell search and synchronization. *Id*., 25:6-9 ("Referring to FIGs. 11A, 11B and 12, a method of using the pilot pattern shown in FIG. 10 in the downlink signal of the OFDMA-based mobile communication system … will be described in detail"); 25:10-12 ("First, a synchronization and cell search method according to a second preferred embodiment of the present invention will be described with reference to FIGs. 11A and 11B").[6]

However, initial synchronization and cell search, which, as I explained above, is what Kim's method is directed at, are not

[6] While Kim's additional embodiments operate in a similar manner, Patent Owner discusses Kim's first and second embodiments since those are the portions of Kim relied upon by the Petition. *See, e.g.*, Pet., 26 (relying on Kim pp. 6, 24-26), 27 (relying on Kim Fig. 10), 32 (relying on Kim Fig. 1 & pp. 25-26).

> appropriate for adaptive beam-forming as disclosed in Tong. This is because in Kim's method of cell search and initial synchronization, the transmitter does not yet have an established channel with a user, and does not yet know what user is going to connect to it, nor does it have feedback of the not-yet-established channel, so as to coordinate two or more antennas to beam-form any specific data to a given user through any specific channel.

Ex. 2001 [Alberth-Decl.] ¶¶ 53-58.

None of the above is addressed in Petitioner's arguments on why the POSITA supposedly would have been motivated to implement beam-forming in Kim's pilot signals. Pet., 18-20. Instead, Petitioner simply disregards this threshold issue, and merely generically discusses the alleged advantages of beam forming. *Id*. Petitioner's failure to explain how its combination is supposed to work, when there is a facial mismatch in its combination, is a failure of Petitioner to meet its burden of proof. *Samsung Elecs. Co. Ltd. v. KAIST IP US LLC*, IPR2017-01046, Papers 12 at 18-20 (Oct. 2, 2017) and 14 at 7 (Jan. 22, 2018) (holding that "[a]lthough proof of physical or bodily incorporation is not required," petitioner failed "to explain sufficiently *how* a POSA would have implemented Hieda's source/drain contact areas in Inaba's device," because compatibility of references was not "self-evident" and petitioner did not explain how features of references were "compatible.") (emphasis in original).

For all of the foregoing reasons, Petitioner fails to show that its Ground 1 discloses that at least some of Kim's subcarriers are beam-formed.

IV. PETITIONER FAILS TO SHOW GROUND 2 RENDERS THE CLAIMS OBVIOUS.

Petitioner in its Ground 2 relies on a combination of Ketchum and Li to challenge the Claims. Pet., 6. Ground 2 fails for two independently sufficient reasons. First, as discussed in section IV.A, *infra*, Petitioner fails to show disclosure of "cell-specific pilots" as claimed. Petitioner, in its first alternative argument for the alleged disclosure of "cell-specific pilots," relies on Ketchum's beacon pilots. Pet., 59. However, as discussed in section IV.A.1, Ketchum is expressly clear that its beacon pilots are not cell-specific, but are an identical, universal set of pilots transmitted from each cell. Petitioner in its second alternative relies on importing cell-specific pilots from Li into Ketchum. Pet., 61. However, as discussed in section IV.A.2, *infra*, Petitioner fails to show any reason why a POSITA would utilize cell-specific pilots in Ketchum. Petitioner admits that Ketchum is already a self-sufficient system that achieves all of its necessary functions with its own pilot. Petitioner fails to point to any deficiency in Ketchum, or any improvement or benefit that can be achieved in Ketchum through the use of cell-specific pilots. Petitioner's generic motivations to combine Ketchum and Li simply fail to connect any motivation to why a POSITA would utilize cell-specific pilots in Ketchum.

Second, Ground 2 fails to disclose or render obvious the limitation that "the plurality of antennas [are] configured to transmit the first plurality of subcarriers and the second plurality of subcarriers in at least one of the time slots." Ex. 1001 ['512 Patent.] cl. 1. As discussed in section IV.B, *infra*, the POSITA would understand this limitation to require that there must be at least one time slot that contains both "the first plurality of subcarriers ***and*** the second plurality of subcarriers." Petitioner, which had the burden to explain how the claims must be construed, appears to apply this understanding of the claims, but fails to show its disclosure in the Petition's Ground 2.

For all of the foregoing reasons, Petitioner's Ground 2 fails.

A. Petitioner Fails To Show Ground 2 Discloses "Cell-Specific Pilots."

The Claims recite a first sort of pilots that are "cell-specific." Ex. 1001 ['512 Patent] cl. 1. Petitioner first relies on Ketchum alone for the disclosure of "cell-specific pilots." Pet., 59-60. However, as discussed in section IV.A.1, *infra*, Ketchum's "beacon pilots" relied upon by Petitioner are not "cell-specific pilots." Petitioner in the alternative relies upon the alleged disclosure of cell-specific pilots in Li (Pet., 61), but fails to articulate a particular reason with rational underpinning as to why, let alone show that there is a reasonable likelihood that it can prove by a preponderance of evidence that, the POSITA would have been motivated to

modify Ketchum's already complete system without any apparent deficiency to utilize Li's allegedly cell-specific pilots. *See* Section IV.A.2, *infra*.

1. *Petitioner Fails To Show That Ketchum Alone Discloses "Cell-Specific Pilots."*

The Patent explains that "cell-specific pilots" contain "information unique to each individual cell." Ex. 1001 ['512 Patent] 3:17-19; *see also id.*, 1:50-51 ("cell-specific information that is unique to a particular cell …."); *see also* Ex. 2001 [Alberth-Decl.] ¶ 61. For the disclosure of the claimed "cell-specific pilots," Petitioner first relies on Ketchum's "beacon pilots" (Pet., 59-60), but, as explained below, both Ketchum and the Patent's specification confirm that these beacon pilots are not "cell-specific."

Ketchum's "beacon pilots" are generic pilots, and "the ***same*** set of pilot symbols" is transmitted from each cell:

> The beacon pilot includes ***a specific set of pilot symbols that is transmitted from each of the N_T transmit antennas***. ***The same set of pilot symbols is*** transmitted for N_B symbol periods designated for beacon pilot transmission.

Ex. 1006 [Ketchum] [0038]. Ketchum's provisional application, which is incorporated into Ketchum's disclosure (*id.*, [0001]), also confirms that Ketchum's beacon pilots are not cell-specific, but rather are a generic set identically sent from each cell:

> A beacon pilot comprises ***a defined set*** of modulation symbols that is ***transmitted from all transmit antennas***.

Ex. 1030 [Ketchum Provisional] [1088]; *see also* Ex. 2001 [Alberth-Decl.] ¶¶ 62-63.

Petitioner argues that because a receiver utilizes the beacon pilots to obtain frequency and timing of the access point sending the pilot, the pilots are cell-specific. Pet., 62. Petitioner is incorrect. First, as Mr. Alberth explains:

> [N]o matter how the receiver utilizes the beacon pilots, Ketchum is unambiguously clear that its beacon pilots consist of an ***identical*** set of pilots being transmitted from each cell. Ex. 1006 [Ketchum] [0038]; Ex. 1030 [Ketchum Provisional] [1088]. There is nothing "cell-specific" about them.
>
> The '512 Patent itself confirms that merely utilizing common pilot signals to determine timing and frequency of a transmitter does not transform the common pilots into cell-specific pilots. This is because the '512 Patent itself also utilizes its common pilots (not cell-specific pilots) for frequency and timing estimation, but refers to those as "common pilots," not "cell-specific pilots." *See, e.g.*, Ex. 1001 ['512 Patent] 5:65-67 ("The common pilot subcarriers can be used for a number of functionalities, such as frequency offset estimation and timing estimation"); *see also id*., 6:1-47 (explaining the details of how to use the common pilots for frequency and timing estimation). Thus, the '512 Patent confirms that Ketchum's use of its universal, generic

beacon pilots for timing and frequency estimation does not transform them into "cell-specific pilots."

Ex. 2001 [Alberth Decl.] ¶¶ 65-66.

Second, Petitioner's analysis is flawed. As Mr. Alberth explains:

[E]ven though Ketchum's receivers use the beacon pilot to estimate the frequency and timing of the transmitter that transmitted a given signal, they do so in a "blind" manner without even knowing which specific transmitter is the one that transmitted the signal in question. Instead, as I explain below, the receiver simply applies the timing and frequency offset of the beacon pilot to the data that was transmitted with it, without regard to, or any specific knowledge of, whichever one of the many transmitters that may have sent the signal.

In Ketchum, the same beacon signal is transmitted with each TDD frame. Ex. 1006 [Ketchum] [0216]. Because the beacon signal is a known, "defined set" of symbols (Ex. 1030 [Ketchum Provisional] [1088]), the receiver can use the beacon signal to determine the timing and frequency of the transmitter that transmitted the signal. In doing so, the receiver does not even need to know (and there is no evidence that it does know), which specific one of the many system transmitters have transmitted the signal in question. Instead, the receiver blindly uses the pilot to adjust the data signals received with it, without any idea of which transmitter transmitted the signal or any transmitter-specific information. The pilot symbols convey no cell-specific information to the receiver, and in fact the receiver does not even know which transmitter transmitted the pilot. *Compare* Ex. 1001

> ['512 Patent] 3:17-19 ("cell-specific pilots" contain "information unique to each individual cell"); 1:50-51 ("cell-specific information that is unique to a particular cell ….").

Ex. 2001 [Alberth-Decl.] ¶¶ 67-68.

Furthermore, if Ketchum's universal set of beacon pilots were "cell-specific pilots" within the meaning of the Claims by virtue of merely having been sent from different transmitters, then the limitation "wherein the first pilots are cell-specific pilots" would be superfluous. *See Innova/Pure Water, Inc. v. Safari Water Filtration Sys.*, 381 F.3d 1111, 1119 (Fed. Cir. 2004) ("[A]ll claim terms are presumed to have meaning in a claim"). This is because the Claims already require the transmitter to "insert first pilots of a first type onto a first plurality of subcarriers." Ex. 1001 ['512 Patent] cl. 1. Thus, the Claims already recite the transmission of the first type from the transmitter. If that is all there were required from the Claims, and if an identical set of pilots transmitted from all cells is all that were needed, then the Claims did not need to recite "wherein the first pilots are cell-specific pilots." Ex. 2001 [Alberth-Decl.] ¶ 69.

For all of the foregoing reasons, Ketchum fails to disclose "cell-specific pilots" as claimed.

2. *Petitioner Fails To Show That Combination Of Ketchum And Li Discloses "Cell-Specific Pilots."*

Petitioner argues in the alternative that a POSITA would have been motivated to modify Ketchum in view of Li to utilize cell-specific pilots. Pet., 61-62. However, Petitioner fails to articulate any reasoning with rational underpinning as to why the POSITA would have been motivated to modify Ketchum to utilize cell-specific pilots.

In the first place, Petitioner's entire basis for why Li allegedly discloses "cell-specific pilots" is a single, noncommittal statement that the pilot signal "may" be different for different cells: "The pilot symbols ***may be*** different for different cells (or sectors)." Ex. 1007 [Li] [0028] (*cited* by Pet., 61).

Li does not disclose, and Petitioner does not point to any disclosure in Li regarding, why it may be desirable for the pilots to be different for different cells, or any other explanation or suggestion that would motivate the POSITA to modify Ketchum in view of Li. Ex. 2001 [Alberth-Decl.] ¶ 72; *see also Suprema, Inc. v. ITC*, 742 F.3d 1350, 1368 (Fed. Cir. 2013) ("That a person of skill in the art [seeking to use the first alleged obviousness reference] 'could very well' use the triplet of the [second alleged obviousness reference] is insufficient reason for the skilled artisan to specifically seek out the unique lens disclosed in that reference"), *vacated*, 796 F.3d 1338 (Fed. Cir 2015) (*en banc*), *and reinstated in pertinent part*, 626 Fed. Appx. 273 (Fed. Cir. 2015).

Petitioner further fails to provide any analysis beyond what Li discloses as to why a POSITA would have been motivated to modify Ketchum in view of Li to utilize cell-specific pilots. The Petition admits that Ketchum is already able to obtain the timing and frequency of the received data frame through its own generic "beacon pilots." *See, e.g.*, Pet., 60. As the Petition further admits, Ketchum already discloses multiple other types of pilots that allow its system to achieve all of its necessary functions. *See* Ex. 1006 [Ketchum] Table 1 (describing MIMO Pilot, Steered Reference Pilot and Carrier Pilot) (*quoted* by Pet., 60). In fact, Petitioner relies on other pilot types disclosed in Ketchum for other limitations. *See, e.g.*, Pet., 62 (relying on Ketchum's steered reference pilots for the alleged disclosure of the claimed second pilot type). Petitioner does not identify any shortcoming in Ketchum, or any improvement as a result of its combination with Li, or any other reason why a POSITA would have been motivated to modify Ketchum's own fully-functioning system to utilize cell-specific pilots. *See Kinetic Concepts, Inc. v. Smith & Nephew, Inc.*, 688 F.3d 1342, 1369 (Fed. Cir. 2012) (when the systems in two references each independently operate effectively, skilled artisans "would have no reason to combine the features of both devices into a single device."); *see also* Ex. 2001 [Alberth-Decl.] ¶ 73.

Purporting to supply a motivation, Petitioner relies on its generic discussion of why the POSITA would have supposedly implemented Ketchum in view of Li

as a cellular system using OFDMA communication techniques, but Petitioner fails to show any motivation to utilize ***cell-specific pilots*** in such a system. Pet., 62 ("A POSA would have been motivated to implement Ketchum's communication as a cellular system using OFDMA communication techniques, as explained above in §VIII.B.1"). "Thus, the Petition fails to connect the alleged rationale to combine the prior art with the specific limitations of the claims and claim mapping." *Paypal, Inc. v. IOENGINE, LLC*, IPR2019-00906, Paper 16, 22 (Oct. 29, 2019). Notably, there is not ***one sentence*** in the Petition's §VIII.B.1 regarding any alleged motivation to utilize ***cell-specific*** pilots. Pet., 53-56.

Petitioner further argues that Ketchum discloses an OFDM system, and a POSITA would have been motivated to implement it using OFDMA as disclosed in Li because "OFDMA was one of a finite number of identified, predictable solutions for implementing multiple-access in an OFDM system …." Pet., 54-55. Even if that were so, it does not supply any motivation for ***further*** modifying Ketchum beyond using OFDMA to utilize cell-specific pilots. Notably, Petitioner does not, and cannot, claim that utilizing cell-specific pilots is inherently required in an OFDMA system. In fact, Li itself states that the pilots "may" be, but do not have to be, specific to each cell. Ex. 1007 [Li] [0028]. The Patent itself teaches that some prior art OFDMA systems utilize cell-specific pilot *patterns*, and not cell-specific pilots. Ex. 1001 ['512 Patent] 1:62-2:2. This is also confirmed by

Petitioner's own Kim reference that utilizes cell-specific pilot patterns, but not cell-specific pilots. *See* Section III.A, *supra*. In short, that a POSITA may implement Ketchum as a cellular OFDMA system is not shown to have any bearing on why a POSITA would further modify Ketchum to utilize cell-specific pilots, when it already has at least four types of pilots that allow it to fully and effectively function. Ex. 2001 [Alberth-Decl.] ¶¶ 74-75.

Petitioner's argument that a POSITA would have implemented Ketchum as a "cellular" system fails for similar reasons as above. Pet., 54; Ex. 2001 [Alberth-Decl.] ¶ 76. In fact, Petitioner argues that Ketchum's disclosure is already broad enough so that a POSITA would allegedly understand it to apply to cellular networks. Pet., 54 ("For instance, Ketchum refers to its access points 110 as 'base stations,' which is a term commonly associated with cellular systems. … Ketchum's base station also communicates within a particular 'coverage area,' such as a cell"). Thus, implementing Ketchum as a cellular network also is not shown to provide a motivation to further modify Ketchum to utilize cell-specific pilots.

Petitioner finally argues that a POSITA would have been motivated to combine Ketchum and Li "because both are in the same general field of wireless communications, and address the same problem." Pet., 55. It is well settled that there is insufficient evidence of a motivation to combine where the proponent of

obviousness "[gives] no reason for the motivation of a person of ordinary skill to combine [two references] except that the references were directed to the same art or same techniques," or "'address[es] the same technical issues and disclose[d] closely related subject matters.'" *Microsoft Corp. v. Enfish, LLC*, 662 Fed. Appx. 981, 990 (Fed. Cir. 2016); *see also Comcast Cable Communs., LLC v. Promptu Sys. Corp*., 838 Fed. Appx. 555, 557 (Fed. Cir. 2021) (Petitioner "had not proven a motivation to combine because it merely (1) alleged the references came from the same field of study and address the same problem; and (2) recited boilerplate legal conclusions untethered to any claim language"); *Heart Failure Techs., LLC v. Cardiokinetix, Inc*., IPR2013-00183, Paper 12, 9 (Jul. 31, 2013) (denying institution) ("That the references relied upon all relate to human heart repair does not amount to 'some articulated reasoning with some rational underpinning to support the legal conclusion of obviousness'"); *William Wesley Carnes, Sr., Inc. v. Seabord Int'l Inc.*, IPR2019-00133, Paper 10, 17 (May 8, 2019) (denying institution) (merely alleging "similarities" between references does not provide rationale to combine).

Petitioner bears the burden of demonstrating a reason to combine the prior art to reach the claimed invention. *KAIST IP*, IPR2017-01046, Paper 14, 7 . Particular findings must be made as to the reason the skilled artisan, with no knowledge of the claimed invention, "would have selected these components for

combination in the manner claimed." *Polaris Indus., Inc. v. Arctic Cat, Inc.*, 882 F.3d 1056, 1069 n.4 (Fed. Cir. 2018) (*quoting In re Kotzab*, 217 F.3d 1365, 1371 (Fed. Cir. 2000)); *see also Celltrion, Inc. v. Biogen, Inc.*, IPR2016-016141, Paper 65, 22-23 (PTAB Feb. 21, 2018) ("Because Petitioners have not explained with adequate specificity how some objective teachings in the prior art, or knowledge generally available to one of ordinary skill in the art, would have led that individual to combine the relevant teachings to arrive at the claimed invention, [based on the references], we conclude that Petitioners have not shown by a preponderance of the evidence that the challenged claims would have been obvious over the combination of those references").

For all of the reasons discussed above, Petitioner fails to show that its Ground 2 discloses "cell-specific pilots."

B. Petitioner Fails To Show That The Plurality Of First And Second Claimed Subcarriers Are Both Transmitted "In At Least One Of The Time Slots."

The Claims recite that "the plurality of antennas [are] configured to transmit the first plurality of subcarriers and the second plurality of subcarriers in at least one of the time slots." Ex. 1001 ['512 Patent] cl. 1. As explained below, the POSITA would understand this limitation to require that there must be at least one time slot that contains both "the first plurality of subcarriers ***and*** the second plurality of subcarriers." Ex. 2001 [Alberth-Decl.] ¶ 78. Petitioner, which had the

burden to explain how the claims must be construed, appears to apply the same understanding of the claims, but fails to show its disclosure in the Petition's Ground 2.

Claim construction begins with the language of the claims. *Northern Telecom Ltd. v. Samsung Elecs. Co.*, 215 F.3d 1281, 1287 (Fed. Cir. 2000). The plain meaning of the claims requires that there must be "at least one time slot" where "the first plurality of subcarriers ***and*** the second plurality of subcarriers" are both transmitted. Ex. 2001 [Alberth-Decl.] ¶ 79. While Petitioner does not present any argument to the contrary (*see infra*), and so has failed to meet its burden at the threshold, if Petitioner had argued that the Claims should be interpreted to merely require that the signals generally be transmitted in one or more time slots, that argument would not be persuasive because this entire limitation would be superfluous under such an interpretation. *See Innova/Pure Water*, 381 F.3d at 1119 ("[A]ll claim terms are presumed to have meaning in a claim."). This is because pilots, as with any other signal, are necessarily transmitted in some time slot, and transmitting them in one or more time slots does not add any meaningful limitation to the Claims. Ex. 2001 [Alberth-Decl.] ¶¶ 80-81.

This plain meaning reading of the Claims accords with the embodiments in the '512 Patent's specification. *See Medrad, Inc. v. MRI Devices Corp.*, 401 F.3d 1313, 1319 (Fed. Cir. 2005) ("We cannot look at the ordinary meaning of the term

… in a vacuum. Rather, we must look at the ordinary meaning in the context of the written description and the prosecution history") (citation omitted). As Mr. Alberth explains:

> For example, the '512 Patent's Fig. 5, reproduced below, is a frequency-domain depiction of a transmission from cell p, showing common pilots (c), cell specific pilots (s) and data (shorter arrows) all being transmitted at different frequencies at the time of transmission:
>
> 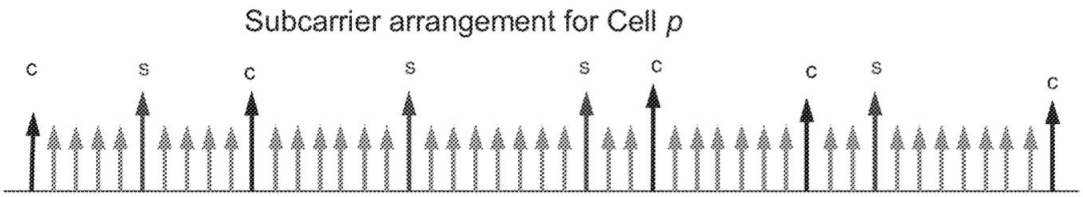
>
>
> Ex. 1001 ['512 Patent] Fig. 5; *see also id*., 5:34-38.

Ex. 2001 [Alberth Decl.] ¶ 82.

Petitioner appears to apply the same understanding as Patent Owner to the claims. *See, e.g*., Pet., 35-36 (arguing in Ground 1 that "the first and second plurality of subcarriers are implemented within a single OFDM symbol, and ***transmitted in a single time slot***"). Given that Petitioner has chosen not to present any claim construction analysis and has, instead, opted to implicitly apply the same understanding of the claims as the Patent Owner, it has waived any contrary claim construction position in this litigation. *See Oyster Optics*, IPR2017-01719, Paper 31, 24 ("Given that an electronic input data stream is neither a location nor a circuit or device, with regard to having the electronic feedback loop 'fed back to

the electronic input data stream,' ***Petitioner should have provided its claim construction and corresponding explanation as to why*** [the art] ***satisfies the limitation in the Petition***"); 37 C.F.R. § 42.104(b)(3) ("[T]he Petition must set forth…[h]ow the challenged claim is to be construed").

Petitioner fails to show that its Ground 2 discloses the Claims as properly understood, including based on the same understanding of the Claims that Petitioner itself applied in its Ground 1. *See, e.g.*, Pet., 35-36 (arguing in Ground 1 that "the first and second plurality of subcarriers are implemented within a single OFDM symbol, and ***transmitted in a single time slot***"). As noted, a POSITA would understand this limitation to require that there must be at least one time slot that contains both of "the first plurality of subcarriers ***and*** the second plurality of subcarriers." Petitioner's Ground 2 relies exclusively on Ketchum for the disclosure of this limitation. Pet., 65-66. However, Ketchum does not disclose this limitation under Petitioner's own mapping, as explained below.

Petitioner maps the claimed "time slot" to each OFDM symbol period in Ketchum. Pet., 65 ("sent during respective OFDM symbol periods (***i.e., time slots***) within the 'time duration'"); 56 ("The OFDM symbols are sent in particular ***time slots*** in the time domain (*e.g.*, ***during an 'OFDM symbol period'***)."). Thus, Petitioner must show that Ketchum's beacon pilots (which Petitioner maps to the claimed "cell-specific pilot"), the steered reference pilots (which Petitioner maps to

the claimed second type of pilot), and traffic data, all are transmitted during a single OFDM symbol period for at least one period. Ex. 2001 [Alberth-Decl.] ¶¶ 84-85. Not only does Petitioner fail to do so, but Petitioner admits that these signals are transmitted during ***different*** time slots.[7]

---

[7] As Patent Owner need only address the theory of obviousness raised by Petitioner, Patent Owner need not address construction of "time slot" because the Petition fails even under Petitioner's own mapping of the references. *See* 37 C.F.R. § 42.104(b)(4) (The Petition "must identify" how "the construed claim is unpatentable."); *Facebook, Inc. v. Uniloc USA, Inc.*, IPR2017-01524, Paper 7, 19 (Dec. 4, 2017) (denying institution and refusing to "'ma[k]e an obviousness argument on behalf of petitioner' that 'could have been included in a properly-drafted petition,' because 'petitioner bears the burden of proof' and, thus, the Board 'must base its decision on arguments that were advanced by a party,'" explaining, "[i]t is not our role to pick out a theory for Petitioner") (alteration marks and citations omitted, quoting *In re Magnum Oil Tools Int'l, Ltd.*, 829 F.3d 1364, 1381 (Fed. Cir. 2016)); *see also Dynamic Drinkware, LLC v. Nat'l Graphics, Inc.*, 800 F.3d 1375, 1378 (Fed. Cir. 2015) (citing *Tech. Licensing Corp. v. Videotek, Inc.*, 545 F.3d 1316, 1326–27 (Fed. Cir. 2008) (burden of proof never shifts to patent owner in an IPR)).

Petitioner relies on Ketchum's Fig. 2 (reproduced below) to argue that the beacon pilot, steered reference pilot and data (FCH) are transmitted during the same symbol period:

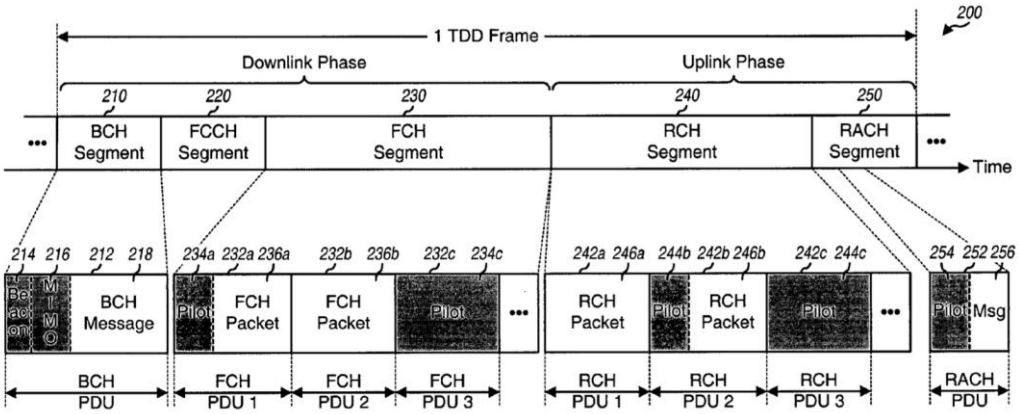

FIG. 2

Ex. 1006 [Ketchum] Fig. 2 (reproduced by Pet., 66). As shown on the figure itself, Ketchum's Fig. 2 depicts a single TDD frame. Ex. 1006 [Ketchum] [0017], [0103]. However, as discussed below, the TDD frame contains ***many hundreds*** of symbol periods. Ketchum explains that "[t]he frame structure and transport channels shown in FIG. 2 are described in detail" in its provisional patent application. *Id*., [0104]. The Ketchum provisional is clear that each TDD frame contains ***approximately 500 OFDM symbols*** (each of which is mapped by Petitioner to a different "time slot"):

> [T]he duration of each TDD frame is fixed at 2 msec, and the number of OFDM symbols per TDD frame is a function of the length of the cyclic prefix used for the OFDM symbols. The BCH has a fixed duration of 80 µsec and uses the 800 nsec cyclic prefix for the OFDM

symbols transmitted. ***The remainder of the TDD frame contains 480 OFDM symbols if the 800 nsec cyclic prefix is used, and 533 OFDM symbols plus 1.2 µsec of excess time if the 400 nsec cyclic prefix is used.***

Ex. 1030 [Ketchum Provisional] [1080]. There is simply no disclosure in Ketchum—and, moreover, Petitioner cites to none—that the beacon pilots, the steered reference pilots and data are all transmitted during the same symbol period. Ex. 2001 [Alberth-Decl.] ¶¶ 86-87. To the contrary, as Mr. Alberth explains:

> [I]t is clear from Ketchum's own Fig. 2 (annotated) that the beacon pilot (yellow), steered reference pilot (red) and data (blue) are located at different parts of the frame and even in different protocol data units, and are thus transmitted at different times:

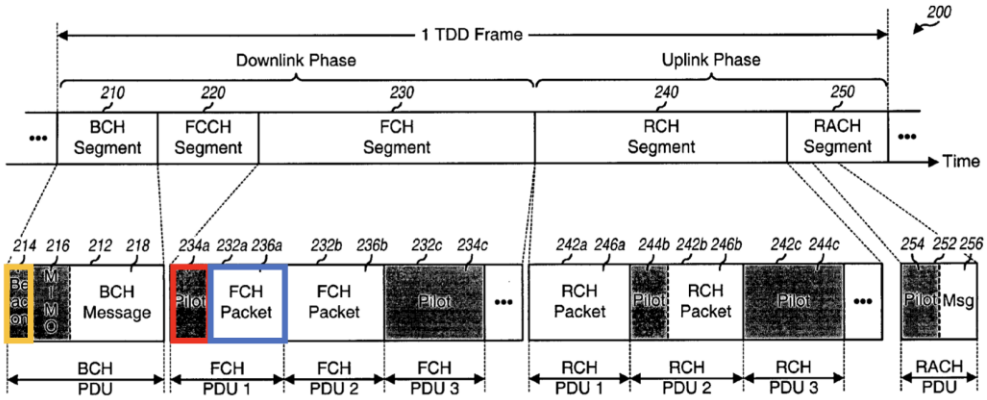

FIG. 2

See also Ex. 1006 [Ketchum] [0101] ("For example, an FCH PDU 232a includes a portion 234a for a pilot and a portion 236a for a data packet").

Ex. 2001 [Alberth Decl.] ¶ 88.

In fact, to argue that Ketchum discloses a different limitation, (1.6), Petitioner took the position that Ketchum ***fails*** to disclose the instant limitation under Petitioner's mapping because its pilots are transmitted during ***different*** (not the same) symbol periods:

> The beacon pilots do not interfere with the steered reference pilots because the beacon pilots ***are transmitted during different time periods*** than the steered reference pilots ….

Pet., 67.

Petitioner's arguments continue, but Petitioner's next arguments consist of statements that are not linked to why these claims are allegedly met.

Petitioner first states that beacon pilots "are transmitted in symbol periods corresponding to transmission of a 'BCH protocol data unit (PDU) 212.'" Pet., 65. In other words, referring to Ketchum Fig. 2, annotated below, Petitioner argues that the beacon pilots (yellow) are transmitted as a part of the BCH PDU (red):

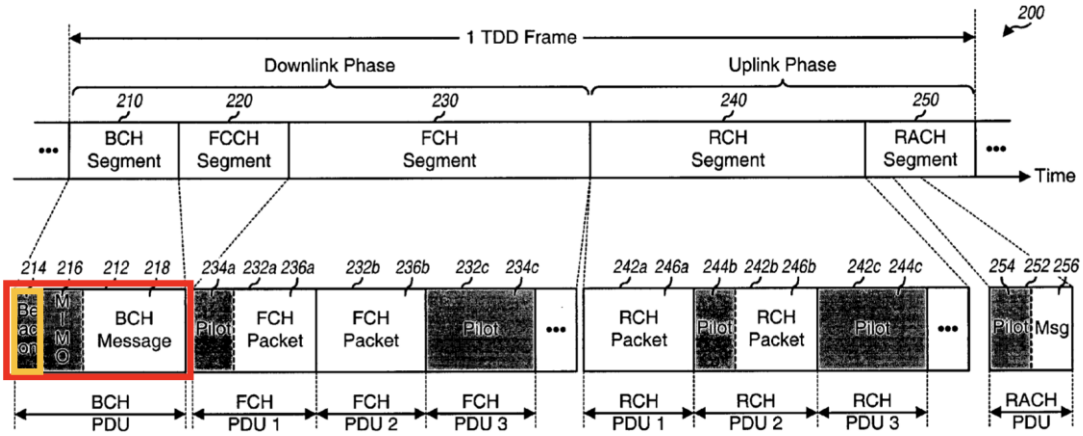

FIG. 2

But this argument fails to help Petitioner here. As noted above, the Petition has mapped the claimed "time slot" to an OFDM symbol period, not to a given PDU. Pet., 56, 65-66. That both the beacon pilot and BCH message are transmitted in the same PDU of a TDD frame has no bearing on whether they are transmitted in the same "time slot" under Petitioner's mapping that each time slot corresponds to an OFDMA symbol period. Ex. 2001 [Alberth-Decl.] ¶ 91. As Mr. Alberth explains:

> [A]s noted above, the BCH itself "has a fixed duration of 80 µsec," Ex. 1030 [Ketchum Provisional] [1080], which contains many symbols. In fact, even if the BCH did not have a fixed duration of 80 µsec, it would contain at least three symbols, one for the beacon pilot, one for the MIMO pilot, and one for the BCH message, as shown in Ketchum's Fig. 2. Thus, the beacon pilot and the BCH message would not be transmitted during the same symbol period.

Ex. 2001 [Alberth-Decl.] ¶ 92.

Further still, even if, contrary to the Petition's mapping, one were to deem the "BCH PDU" to constitute a "time slot," the mapping ***still*** fails because the BCH PDU only contains the beacon pilot and BCH Message, but does not contain, for example, the steered reference pilot that the Petition maps to the claimed "second type of pilot" that must also be transmitted in the same time slot in accordance with the Claims. Pet., 62; *see also* Ex. 2001 [Alberth-Decl.] ¶ 93. Nor does Petitioner present any argument or analysis or any other explanation as to how a different mapping of mapping a "PDU" to a claimed "time slot" could be correct, while for other limitations, it simultaneously maps a OFDMA symbol period to the claimed "time slot." Pet., 65-66.

Petitioner's next statement that both the "[s]teered reference pilots and data are transmitted" during the transmission of "one or more FCH PDUs 232" fails for similar reasons. Pet., 65; Ex. 2001 [Alberth-Decl.] ¶ 94.

To the extent Petitioner in its Ground 2 argues that the claim limitation "in at least one of the time slots" merely requires each pilot/data symbol to be separately transmitted in its own "time slot," that argument fails for several reasons. First, such an understanding would be incorrect in light of both the claim language and specification, as discussed above, and would render the limitation superfluous. Furthermore, this understanding would contradict Petitioner's own application of

the claims in connection with its Ground 1 arguments. Pet., 35-36 (arguing in Ground 1 that "the first and second plurality of subcarriers are implemented within a single OFDM symbol, and ***transmitted in a single time slot***"). Third, to the extent that Petitioner applied two different, incompatible understanding of the claims in two different grounds with no explanation, analysis or even acknowledgement, then the Petition is deficient on its face. *See Oyster Optics*, IPR2017-01719, Paper 31 at 24 ("Petitioner should have provided its claim construction and corresponding explanation as to why [the art] satisfies the limitation in the Petition"); 37 C.F.R. § 42.104(b)(3) ("[T]he Petition must set forth…[h]ow the challenged claim is to be construed"). Finally, the Petition has waived any claim construction argument as it has failed to include any discussion, analysis or understanding of claim terms in the Petition, and especially if it has applied two different, inconsistent understanding of the claims in two different grounds. *Hulu LLC v. Sound View Innovations LLC*, IPR2018-01023, Paper 15, 5, 10 (Aug. 14, 2019) ("The Petition must identify how the challenged claims are to be construed.…It is thus reasonable to expect a petitioner to read the contents of the specification of the challenged patent and address an express definition therein of a challenged claim term.") (internal citations omitted) (denying request for rehearing of decision denying institution).

For all of the foregoing reasons, Petitioner fails to show that its Ground 2 discloses that "the plurality of antennas [are] configured to transmit the first plurality of subcarriers and the second plurality of subcarriers in at least one of the time slots."

V. CONCLUSION

For the foregoing reasons, the Petition should be denied.

Respectfully submitted,

/ Kenneth J. Weatherwax /

Kenneth J. Weatherwax, Reg. No. 54,528
LOWENSTEIN & WEATHERWAX LLP

Date: July 6, 2023

CERTIFICATE OF COMPLIANCE WITH TYPE-VOLUME LIMITS

This Patent Owner Preliminary Response (the "POPR") consists of 10,261 words, excluding table of contents, table of authorities, certificate of service, this certificate, or table of exhibits. The POPR complies with the type-volume limitation of 14,000 words as mandated in 37 C.F.R. § 42.24. In preparing this certificate, counsel has relied on the word count of the word-processing system used to prepare the paper (Microsoft Word).

Respectfully submitted,

/ Robert Pistone /

Date: July 6, 2023

CERTIFICATE OF SERVICE

The undersigned hereby certifies that the following documents were served by electronic service, by consent between the parties, on the date signed below:

PATENT OWNER'S PRELIMINARY RESPONSE

EXHIBITS 2001-2006 AND 2009

The names and address of the parties being served are as follows:

John S. LeRoy FPGP0139IPR@brookskushman.com
Christopher Smith
Kyle G. Konz

Respectfully submitted,

/ Robert Pistone /

Date: July 6, 2023